12-16-93
Vol. 58 No. 240
Pages 65657-65864

federal register

Thursday
December 16, 1993

Briefings on How To Use the Federal Register
For information on briefings in Washington, DC, see announcement on the inside cover of this issue.

FEDERAL REGISTER Published daily, Monday through Friday, (not published on Saturdays, Sundays, or on official holidays), by the Office of the Federal Register, National Archives and Records Administration, Washington, DC 20408, under the Federal Register Act (49 Stat. 500, as amended; 44 U.S.C. Ch. 15) and the regulations of the Administrative Committee of the Federal Register (1 CFR Ch. I). Distribution is made only by the Superintendent of Documents, U.S. Government Printing Office, Washington, DC 20402.

The **Federal Register** provides a uniform system for making available to the public regulations and legal notices issued by Federal agencies. These include Presidential proclamations and Executive Orders and Federal agency documents having general applicability and legal effect, documents required to be published by act of Congress and other Federal agency documents of public interest. Documents are on file for public inspection in the Office of the Federal Register the day before they are published, unless earlier filing is requested by the issuing agency.

The seal of the National Archives and Records Administration authenticates this issue of the **Federal Register** as the official serial publication established under the Federal Register Act. 44 U.S.C. 1507 provides that the contents of the **Federal Register** shall be judicially noticed.

The **Federal Register** is published in paper, 24x microfiche format and magnetic tape. The annual subscription price for the **Federal Register** paper edition is $375, or $415 for a combined **Federal Register**, Federal Register Index and List of CFR Sections Affected (LSA) subscription; the microfiche edition of the **Federal Register** including the Federal Register Index and LSA is $353; and magnetic tape is $37,500. Six month subscriptions are available for one-half the annual rate. The charge for individual copies in paper form is $4.50 for each issue, or $4.50 for each group of pages as actually bound; or $1.50 for each issue in microfiche form; or $175.00 per magnetic tape. All prices include regular domestic postage and handling. International customers please add 25% for foreign handling. Remit check or money order, made payable to the Superintendent of Documents, or charge to your GPO Deposit Account, VISA or MasterCard. Mail to: New Orders, Superintendent of Documents, P.O. Box 371954, Pittsburgh, PA 15250–7954.

There are no restrictions on the republication of material appearing in the **Federal Register.**

How To Cite This Publication: Use the volume number and the page number. Example: 58 FR 12345.

SUBSCRIPTIONS AND COPIES

PUBLIC	
Subscriptions:	
Paper or fiche	**202–783–3238**
Magnetic tapes	**512–1530**
Problems with public subscriptions	**512–2303**
Single copies/back copies:	
Paper or fiche	**783–3238**
Magnetic tapes	**512–1530**
Problems with public single copies	**512–2457**
FEDERAL AGENCIES	
Subscriptions:	
Paper or fiche	**523–5243**
Magnetic tapes	**512–1530**
Problems with Federal agency subscriptions	**523–5243**

For other telephone numbers, see the Reader Aids section at the end of this issue.

THE FEDERAL REGISTER
WHAT IT IS AND HOW TO USE IT

FOR: Any person who uses the Federal Register and Code of Federal Regulations.

WHO: The Office of the Federal Register.

WHAT: Free public briefings (approximately 3 hours) to present:
1. The regulatory process, with a focus on the Federal Register system and the public's role in the development of regulations.
2. The relationship between the Federal Register and Code of Federal Regulations.
3. The important elements of typical Federal Register documents.
4. An introduction to the finding aids of the FR/CFR system.

WHY: To provide the public with access to information necessary to research Federal agency regulations which directly affect them. There will be no discussion of specific agency regulations.

WASHINGTON, DC
(TWO BRIEFINGS)

WHEN: January 13 at 9:00 am and 1:30 pm
WHERE: Office of the Federal Register, 7th Floor Conference Room, 800 North Capitol Street NW, Washington, DC (3 blocks north of Union Station Metro)
RESERVATIONS: 202–523–4538

Printed on recycled paper containing 100% post consumer waste

Contents

Federal Register
Vol. 58, No. 240
Thursday, December 16, 1993

Agriculture Department
See Forest Service
See Soil Conservation Service
NOTICES
Agency information collection activities under OMB review, 65697

Centers for Disease Control and Prevention
NOTICES
Grants and cooperative agreements; availability, etc.:
Lyme disease; research, treatment, and education programs, 65721
Vaccines for children program; list and schedules of pediatric vaccines to be purchased and administered, 65725

Coast Guard
RULES
Drawbridge operations:
Florida, 65668
International Regulations for Preventing Collisions at Sea (72 COLREGS); amendment, 65667
Ports and waterways safety:
Providence River, RI; safety zone, 65669
Practice and procedures:
Enforcement; civil and criminal penalty proceedings, 65665
PROPOSED RULES
Pollution:
Existing tank vessels without double hulls; structural and operational measures to reduce oil spills
Meeting, 65683
Gulf of Mexico; lightering zones, 65683
Ports and waterways safety:
California coast port access routes; vessel traffic regulations for offshore national marine sanctuaries study, 65686
Providence River, RI; regulated navigation area, 65684
NOTICES
Meetings:
Commercial Fishing Industry Vessel Advisory Committee 65756

Commerce Department
See International Trade Administration
See National Oceanic and Atmospheric Administration

Defense Department
NOTICES
Meetings:
Nuclear Weapons Surety Joint Advisory Committee, 65703
Service Academy Athletic Programs Defense Advisory Committee, 65703

Drug Enforcement Administration
NOTICES
Applications, hearings, determinations, etc.:
Anys, Inc., 65734
Benke, Gary D., M.D., 65734

Economic Regulatory Administration
NOTICES
Consent orders:
Dane Energy Co., 65705

Education Department
RULES
Postsecondary education:
Graduate assistance in areas of national need, 65836
PROPOSED RULES
State-administered programs and Federal, State, and local partnership for educational improvement; State plan filing deadlines and pre-award costs, 65856
NOTICES
Grants and cooperative agreements; availability, etc.:
Foreign language materials acquisition program, 65703
Graduate assistance in areas of national need program, 65838

Energy Department
See Economic Regulatory Administration
See Federal Energy Regulatory Commission
NOTICES
Energy facility siting; report availability, 65703
Grants and cooperative agreements; availability, etc.:
Museum education program, 65704

Environmental Protection Agency
PROPOSED RULES
Air pollutants, hazardous; national emission standards:
Chromium emissions from hard and decorative chromium electroplating and chromium anodizing tanks, 65768
Air quality implementation plans; approval and promulgation; various States:
Illinois, 65686, 65688, 65691
NOTICES
Agency information collection activities under OMB review, 65709
Confidential business information and data transfer to contractors, 65709, 65710
Drinking water:
Underground injection control program—Michigan, 65711

Executive Office of the President
See Presidential Documents

Federal Aviation Administration
RULES
Airworthiness directives:
Gulfstream, 65662

Federal Communications Commission
RULES
Common carrier services:
Tariffs—
Billing name and address; tariffing requirements, 65669
Radio stations; table of assignments:
Alaska, 65672
California, 65672
Mississippi, 65673

New York, 65671
South Carolina, 65673
NOTICES
Public safety radio communications plans:
Hawaii, 65712
Washington, DC, area, 65712

Federal Deposit Insurance Corporation
NOTICES
Meetings; Sunshine Act, 65766

Federal Energy Regulatory Commission
NOTICES
Environmental statements; availability, etc.:
Columbia Gas Transmission Corp., 65706
Applications, hearings, determinations, etc.:
Delano Energy Co., Inc., 65707
Enron Power Marketing, Inc., 65707
Tennessee Gas Pipeline Co., 65708
Texas Eastern Transmission Corp., 65708

Federal Highway Administration
RULES
Freedom of Information Act; implementation, 65824
PROPOSED RULES
Engineering and traffic operations:
Size and weight enforcement certification, 65830
Truck size and weight—
National Network for commercial vehicles; route additions in Georgia, 65677
NOTICES
Environmental statements; notice of intent:
Los Angeles County, CA, 65756
Orange and San Diego Counties, CA, 65757
Intelligent vehicle-highway systems:
National program plan development; public participation, 65758
Intermodal Surface Transportation Efficiency Act; implementation:
Overweight intermodal containers; study, 65818
Meetings:
Intelligent Vehicle-Highway Society of America, 65814

Federal Reserve System
RULES
Equal credit opportunity (Regulation B):
Appraisals and enforcement, 65657
NOTICES
Applications, hearings, determinations, etc.:
Sturm, Donald L., 65712

Federal Trade Commission
NOTICES
Prohibited trade practices:
Alvey Holdings, Inc., et al., 65712
Baltimore Metropolitan Pharmaceutical Association, Inc., et al., 65718
Columbia Hospital Corp. et al., 65721
OSRAM SYLVANIA Inc., 65721

Fish and Wildlife Service
PROPOSED RULES
Endangered and threatened species:
Etowah darter, etc., 65696

Food and Drug Administration
RULES
Animal drugs, feeds, and related products:
Roxarsone tablets and liquid, 65664

Forest Service
NOTICES
Environmental statements; availability, etc.:
Tahoe National Forest, CA, 65697

Health and Human Services Department
See Centers for Disease Control and Prevention
See Food and Drug Administration
See National Institutes of Health
See Substance Abuse and Mental Health Services Administration

Interior Department
See Fish and Wildlife Service
See Land Management Bureau
See National Park Service
See Reclamation Bureau
See Surface Mining Reclamation and Enforcement Office

International Trade Administration
NOTICES
Antidumping:
Aramid fiber formed of poly-phenylene terephthalamide from—
Netherlands, 65699

International Trade Commission
NOTICES
Import investigations:
Cutting tools for flexible plastic conduit and components, 65730
Methods of assembling plastic ball valves and components, 65731
Phthalic anhydride from—
Brazil et al., 65732
Steel wire rod from—
Brazil et al., 65732

Interstate Commerce Commission
PROPOSED RULES
Practice and procedure:
Jurisdiction over motor finance transactions, 65695
NOTICES
Railroad services abandonment:
Consolidated Rail Corp., 65733

Justice Department
See Drug Enforcement Administration
See Prisons Bureau

Land Management Bureau
NOTICES
Realty actions; sales, leases, etc.:
California, 65727

National Archives and Records Administration
NOTICES
Reference service on certain textual records; temporary closure, 65735

National Highway Traffic Safety Administration
RULES
Motor vehicle safety standards:
Lamps, reflective devices, and associated equipment—
Daytime running lamps, 65673

National Institutes of Health
NOTICES
Committees; establishment, renewal, termination, etc..
Alternative Medicine Program Advisory Council, 65727

National Oceanic and Atmospheric Administration
RULES
Marine sanctuaries:
Flower Garden Banks National Marine Sanctuary, LA and TX, 65664
PROPOSED RULES
Marine sanctuaries:
Vessel traffic regulations for offshore California national marine sanctuaries; port of access routes; study, 65686
NOTICES
Permits:
Endangered and threatened species, 65702
Marine mammals, 65702

National Park Service
NOTICES
Environmental statements; availability, etc.:
Palo Alto Battlefield National Historic Site, TX, 65729
Meetings:
Gettysburg National Military Park Advisory Commission, 65730
National Park System Advisory Board, 65730

National Science Foundation
NOTICES
Meetings:
Cross Disciplinary Activities Special Emphasis Panel, 65737
Engineering Education and Centers Special Emphasis Panel, 65737
Research, Evaluation, and Dissemination Special Emphasis Panel, 65737
Systemic Reform Special Emphasis Panel, 65737

Nuclear Regulatory Commission
NOTICES
Environmental statements; availability, etc.:
Cleveland Electric Illuminating Co. et al., 65737
Generic letters:
Acceptable inservice testing programs development; guidance, 65738
Applications, hearings, determinations, etc.:
Wisconsin Public Service Corp. et al., 65739

Presidential Documents
EXECUTIVE ORDERS
Industrial Security Program, National; amendments (EO 12885), 65863

Prisons Bureau
RULES
Inmate control, custody, care, etc.:
Education, training, and leisure-time program standards, 65851
Inmate recreation programs, 65850

Public Health Service
See Centers for Disease Control and Prevention
See Food and Drug Administration
See National Institutes of Health
See Substance Abuse and Mental Health Services Administration

Reclamation Bureau
PROPOSED RULES
Arid lands; reclamation by United States; rescission, 65692
Emergency Drought Act policies, procedures, and authorizations; rescission, 65694
Exchange or amendment of farm units on Federal reclamation projects; rescission, 65693
Public Works Appropriation Act for Teton Dam; administrative claims; rescission, 65693

Research and Special Programs Administration
NOTICES
Hazardous materials:
Applications; exemptions, renewals, etc., 65758, 65759

Securities and Exchange Commission
NOTICES
Self-regulatory organizations; proposed rule changes:
American Stock Exchange, Inc., 65740, 65742
Chicago Board Options Exchange, Inc., 65744
Chicago Stock Exchange, Inc., 65744
National Association of Securities Dealers, Inc., 65746
Applications, hearings, determinations, etc.:
Kidder, Peabody Exchange Money Fund, 65747
State Mutual Life Assurance Co. of America et al., 65748, 65750
Voyageur Tax Free Funds, Inc., et al., 65752

Sentencing Commission, United States
See United States Sentencing Commission

Soil Conservation Service
NOTICES
Environmental statements; availability, etc.:
Taylor Watershed, ND, 65698

Substance Abuse and Mental Health Services Administration
NOTICES
Meetings:
Substance Abuse Prevention Center, 65727

Surface Mining Reclamation and Enforcement Office
PROPOSED RULES
Permanent program and abandoned mine land reclamation plan submissions:
Indiana, 65679
Wyoming, 65681

Transportation Department
See Coast Guard
See Federal Aviation Administration
See Federal Highway Administration
See National Highway Traffic Safety Administration
See Research and Special Programs Administration

Treasury Department
NOTICES
Agency information collection activities under OMB review, 65761
Committees; establishment, renewal, termination, etc.:
Data Integrity Board, 65761

United States Information Agency
NOTICES
Art objects, importation for exhibition:
St. John the Baptist, 65765
Grants and cooperative agreements; availability, etc.:
Secondary school initiative for school linkages, 65765

United States Sentencing Commission
NOTICES
Sentencing guidelines and policy statements for Federal courts, 65764

Veterans Affairs Department
NOTICES
Meetings:
Wage Committee, 65765

Separate Parts In This Issue

Part II
Environmental Protection Agency, 65768

Part III
Department of Transportation, Federal Highway Administration, 65814

Part IV
Department of Transportation, Federal Highway Administration, 65818

Part V
Department of Transportation, Federal Highway Administration, 65824

Part VI
Department of Transportation, Federal Highway Administration, 65830

Part VII
Department of Education, 65836

Part VIII
Department of Education, 65838

Part IX
Department of Justice, Bureau of Prisons, 65850

Part X
Department of Education, 65856

Part XI
The President, 65861

Reader Aids
Additional information, including a list of public laws, telephone numbers, and finding aids, appears in the Reader Aids section at the end of this issue.

Electronic Bulletin Board
Free **Electronic Bulletin Board** service for Public Law numbers and **Federal Register** finding aids is available on 202–275–1538 or 275–0920.

CFR PARTS AFFECTED IN THIS ISSUE

A cumulative list of the parts affected this month can be found in the Reader Aids section at the end of this issue.

3 CFR
Executive Orders:
12829 (Amended by EO 12885).....65863
12885.....65863

12 CFR
202.....65657

14 CFR
39.....65662

15 CFR
943.....65664
Proposed Rules:
935.....65686
936.....65686
942.....65686
944.....65686

21 CFR
520.....65664

23 CFR
Proposed Rules:
657.....65830
658.....65677

28 CFR
544 (2 documents).....65850, 65851

30 CFR
Proposed Rules:
914.....65679
950.....65681

33 CFR
1.....65665
80.....65667
117.....65668
165.....65669
Proposed Rules:
156.....65683
157.....65683
165.....65684
166.....65686
167.....65686

34 CFR
648.....65838
Proposed Rules:
76.....65856
298.....65856

40 CFR
Proposed Rules:
52 (3 documents).....65686, 65688, 65691
63.....65768

43 CFR
Proposed Rules:
230.....65692
406.....65693
419.....65693
423.....65694

47 CFR
64.....65669
69.....65669
73 (5 documents).....65671, 65672, 65673

49 CFR
7.....65824
571.....65673
Proposed Rules:
1181.....65695
1182.....65695
1186.....65695
1188.....65695

50 CFR
Proposed Rules:
17.....65696

Rules and Regulations

Federal Register
Vol. 58, No. 240
Thursday, December 16, 1993

This section of the FEDERAL REGISTER contains regulatory documents having general applicability and legal effect, most of which are keyed to and codified in the Code of Federal Regulations, which is published under 50 titles pursuant to 44 U.S.C. 1510.

The Code of Federal Regulations is sold by the Superintendent of Documents. Prices of new books are listed in the first FEDERAL REGISTER issue of each week.

FEDERAL RESERVE SYSTEM

12 CFR Part 202

[Regulation B; Docket No. R-0782]

Equal Credit Opportunity; Appraisals and Enforcement

AGENCY: Board of Governors of the Federal Reserve System.

ACTION: Final rule.

SUMMARY: The Board is adopting a final rule revising Regulation B to implement amendments to the Equal Credit Opportunity Act contained in the Federal Deposit Insurance Corporation Improvement Act of 1991. The law provides credit applicants with a right to receive copies of appraisal reports. Regulation B is amended to provide alternative methods of compliance with the law. Creditors may automatically provide a copy of an appraisal report to all applicants for certain dwelling-secured loans, or they may provide a copy upon the applicant's request (subject to other provisions in the final rule). For creditors that do not automatically provide copies of appraisal reports, the regulation includes limits on when an applicant may request (and a creditor must provide) a copy of an appraisal report, and a requirement that applicants be notified of the right to receive a copy. The final rule applies to applications for credit to be secured by a lien on a residential structure containing one-to-four family units.

DATES: *Effective date.* December 14, 1993.

Compliance date. Compliance is optional until June 14, 1994.

FOR FURTHER INFORMATION CONTACT: Michael Bylsma, Senior Attorney, or Jane Ahrens, Jane Gell or Mary Jane Seebach, Staff Attorneys, at (202) 452-3667; for the hearing impaired only, contact Dorothea Thompson, Telecommunications Device for the Deaf (TDD), at (202) 452-3544, Board of Governors of the Federal Reserve System, Washington, DC 20551.

SUPPLEMENTARY INFORMATION:

(1) Background

The Equal Credit Opportunity Act (ECOA), 15 U.S.C. 1691-1691f, makes it unlawful for creditors to discriminate in any aspect of a credit transaction on the basis of gender, marital status, race, national origin, color, religion, age (provided the applicant has the capacity to contract), because all or part of an applicant's income derives from any public assistance, or because an applicant has in good faith exercised any right under the Consumer Credit Protection Act, 15 U.S.C. 1601 *et seq.* The ECOA also provides that a credit applicant has the right to obtain a written statement of reasons for a denial of credit. The Board is authorized to prescribe rules that in its judgment are necessary or proper to effectuate the purposes of the ECOA, to prevent circumvention or evasion of the act, or to facilitate or substantiate compliance with the act. The act is implemented by the Board's Regulation B, 12 CFR part 202. A staff commentary to the regulation, 12 CFR part 202 Supp. I, applies and interprets the requirements of Regulation B.

The Federal Deposit Insurance Corporation Improvement Act of 1991 (FDICIA) was enacted into law in December 1991 (Pub. L. 102-242, 105 Stat. 2236). Section 223 of the FDICIA contains amendments to the ECOA that took effect on the date the law was enacted. The law requires creditors to furnish applicants, upon written request, with a copy of an appraisal report used in connection with an application for a loan secured by residential real property. The law provides that creditors may require the applicant to reimburse the creditor for the cost of the appraisal. The law also expands the enforcement activities of the federal financial supervisory agencies when information about possible violations of the ECOA becomes known. The law specifies when the Department of Justice (DOJ) must be contacted regarding suspected violations of the ECOA, and when the Department of Housing and Urban Development (HUD) must be notified of suspected violations of the ECOA that may also be violations of the Fair Housing Act (FHA).

On December 7, 1992, the Board published a proposed rule to implement the FDICIA amendments to the ECOA (57 FR 57697). The Board received nearly 240 comment letters on the proposal, mostly from institutions that would be covered by the regulation. A number of commenters raised concerns about the burden and costs the new requirements would impose. Many commenters raised specific questions about various provisions in the proposal. The Board has responded to many of those concerns by adopting both substantive and technical changes to the proposal.

A creditor's duty to provide appraisals upon request began on December 19, 1991. Creditors must begin complying with the regulation's requirements on June 6, 1994, which allows institutions to familiarize themselves with the rule, prepare disclosures, and train personnel.

(2) Regulatory Provisions

Right to Appraisal Report

Section 701(e) of the ECOA requires a creditor promptly to furnish an applicant, upon a written request made within a reasonable period of time of the application, a copy of the appraisal report used in connection with a loan that is or would have been secured by a lien on residential real property. The Board proposed to implement the appraisal provision by defining the scope of residential real property; imposing time limitations for applicants to request copies of appraisals and for creditors to provide copies; and requiring creditors to provide a written notice to credit applicants of their right to obtain copies of appraisal reports upon written request. These rules were proposed to minimize the potential for civil liability (due to the uncertainty of the scope of the law) and to aid uniform and objective assessments of creditors' compliance with the ECOA in an examination by federal enforcement agencies.

In addition to soliciting comment on the specific provisions of the proposal, the Board solicited comment on two alternative approaches to implementing the ECOA appraisal provision: (1) Incorporating the text of section 701(e) into Regulation B without elaboration, or (2) interpreting and defining only a

few key terms found in section 701(e) (such as the scope of the law) in the regulation.

Of the 240 commenters, approximately a dozen favored adopting only the statutory text or not incorporating the statutory provision into the regulation at all, suggesting that self-regulation would be adequate to ensure compliance. Most commenters favored defining and interpreting terms in the regulation. Most commenters also made specific suggestions and raised questions about the proposed regulation.

The commenters favoring precise rules (including financial institutions and community representatives) argued that it would help creditors by clarifying how to comply with the amendments, and help credit applicants by ensuring that they are treated consistently, regardless of the creditor from whom they seek credit.

The Board believes, in light of the volume and variety of issues raised in comments regarding the scope of coverage, timing, and other statutory terms, that merely incorporating the text of section 701(e) could produce widely inconsistent approaches by creditors (and even regulators) to compliance with the law. For example, some industry commenters suggested that "residential real property" could be interpreted to include only one- to four-unit dwellings, while others thought the term could be interpreted to include all dwellings.

Based on the comments received and upon further analysis, the Board is adopting a rule that defines and interprets the key terms and text of section 701(e) of the ECOA. The Board believes a consistent understanding among creditors and consumers alike about the law, including which loans trigger the duty to provide appraisal reports and what information comprises an appraisal report, will ease compliance, avoid conflict and potential liability, and effectuate the purposes of the ECOA.

Section 202.5a—Rules on Providing Appraisal Reports

Scope of coverage. Section 701(e) of the ECOA provides that the right to obtain a copy of an appraisal report applies to an application for credit that is or would have been secured by a lien on residential real property. The term "residential real property" is not defined in the statute. In the proposed rule, the Board defined the scope of coverage to be credit applications, regardless of their purpose (whether business or consumer purpose), that are to be secured by a dwelling. A "dwelling" was defined as a one- to four-unit residential structure. The proposed coverage included loans to be secured by mobile homes and individual cooperative units, whether or not such dwellings are considered real property under state law, and excluded loans to be secured by land only. Coverage would not have been limited to first-lien transactions.

In response to the comments received and upon further analysis, the Board is adopting the scope of coverage as proposed. The definition of dwelling that was included in the proposal has been adopted. The definition includes mobile homes and individual cooperative units, whether or not they are considered real property under state law, to ensure that the coverage of residential appraisals is not limited by property classification. The Board notes that this definition is consistent with the definition of dwelling contained in § 202.13(a).

In general, most commenters supported the proposed rule's coverage of dwellings containing one to four units and opposed any broadening beyond that. Several commenters supported expanding the coverage of the regulation to include all dwellings, no matter how many units a dwelling comprises. They stated that discriminatory practices in residential appraisals can include "underappraising" a multifamily building based on the characteristics of the residents of the building or of the neighborhood in which it is located.[1]

The Board believes that extending the coverage of the appraisal requirements to include multifamily dwellings could impose a significant burden on institutions which could outweigh the benefits to consumers. Such coverage, for example, would extend the right to receive a copy of an appraisal report to developers of multifamily properties, who generally were not identified by the Congress as experiencing lending discrimination through the appraisal process or as having difficulty in receiving copies of appraisals.

Nevertheless, while the final rule does not cover multifamily dwellings, creditors are reminded that the rules prohibiting discrimination under Regulation B are applicable to transactions involving multifamily dwellings (as are the provisions of the Fair Housing Act). For example, the regulation prohibits a creditor from denying an application for credit to be secured by an apartment building based on the race or national origin of the applicant, or of the tenants in the building (or the neighborhood in which it is located). Furthermore, the Board will monitor complaints and information obtained through the examination process about loan denials in connection with multifamily properties. If the Board has reason to believe that applicants for multifamily loans are not receiving copies of appraisal reports upon request (or are experiencing discrimination), it may consider broadening the coverage of § 202.5a.

Some commenters opposed the coverage of transactions secured by a consumer's dwelling that are for a business purpose, such as loans to start a small business. These commenters discussed the potential difficulty in training commercial loan staff to comply with the new requirements, particularly if a notice is required to be given to all applicants. The statute does not exempt applications for business loans secured by residential real property from the right to obtain a copy of an appraisal report, and nothing in the legislative history suggests that coverage should be so limited. Further, business-purpose loans presently are subject to Regulation B and its requirements to provide notices about the action taken on an application. Therefore, the Board believes that the requirements of § 202.5a can be readily incorporated into existing procedures—particularly since, as described below, the notice requirement for appraisal reports may be incorporated into other commonly used documents or required notices. The burden on institutions by extending the right to receive a copy of an appraisal report to both consumer- and business-purpose loans secured by a dwelling will be minimized in the final rule, because multifamily dwellings are not covered.

Definition of appraisal report. The statute does not define an appraisal report; however, the legislative history suggests that it is the complete appraisal report signed by the appraiser, including all information submitted to the lender by the appraiser for the purpose of determining the value of residential property. The proposed definition was based on the legislative history, and stated that an appraisal report referred to the documents relied upon by a creditor in evaluating the

[1] Some commenters referred to a recent settlement of litigation (*Green* v. *Avenue Bank of Oak Park*), approved by a federal district court in Illinois, as an indication that credit on multifamily properties could be denied based on redlining and underappraisals. This lawsuit involved allegations that a loan officer's assessment of the value of a multifamily property—based on his perceptions about conditions in the low-income neighborhood where it was located—was used to deny a mortgage application, although no formal appraisal was made.

market value of residential property containing one-to-four family units on which a lien will be taken as collateral for an extension of credit, including reports prepared by the creditor. The proposal stated that an appraisal report would not be limited to reports prepared by third parties.

The final rule provides the same meaning for an appraisal report as was proposed, but the definition has been shortened for clarity. A consumer who requests a copy of the appraisal report will be entitled to receive a copy of any third party appraisal that has been performed. For consistency with the rules implementing the prohibitions of the Fair Housing Act on discrimination in appraising residential real property, an appraisal report includes all written comments and other documents submitted to the creditor in support of the appraiser's estimate or opinion of value. (See 24 CFR 100.135(b).)

The "appraisal report" does not include copies of "review appraisals," agency-issued statements of appraised value, or any internal documents if a third party appraisal report was used to establish the value of the security. Even when a third party appraisal has been performed, however, a consumer requesting a copy of the report also must receive a copy of documents that reflect the creditor's valuation of the dwelling when that valuation is different from that stated in the third party appraisal report. Such documents would include staff appraisals or other notes indicating why the value assigned by the third party appraiser is not the appropriate valuation.

The right to receive a copy of an appraisal report provided under Regulation B includes, but is not limited to, transactions in which appraisals by a licensed or certified appraiser are required by federal law. If the value of the dwelling has been determined by the creditor and a third party appraiser has not been used, the appraisal report would be the report of the creditor's staff appraiser, where applicable, or the other documents of the creditor which assign value to the dwelling.

Alternative Means of Compliance

1. Paragraph (a)(1)—Routine Delivery

The proposal provided that creditors routinely giving copies of appraisal reports to all applicants, whether credit is granted or denied, would not be subject to the proposed timing requirements for providing an applicant with a notice of the right to receive a copy of an appraisal report. However, the proposal also provided that such creditors would remain subject to the proposed timing rules for responding to a written request for a report, if the request was made prior to the time the creditor routinely provided it.

In response to comments received and upon further analysis, the Board is adopting a final rule that differs from the proposal. Paragraph (a)(1) of the final rule provides that a creditor may comply with the law by routinely giving each applicant a copy of the appraisal report (whether credit is granted or denied or the application is withdrawn). Creditors that routinely provide copies when the appraisal is completed, or later in the application process (for example, when notice is given of action taken on the application), will be in compliance with the regulation. A creditor complying with the law pursuant to paragraph (a)(1) is exempt from the requirements of paragraph (a)(2), the notice and timing rules. The Board believes this approach will provide consumer benefits, simplify the regulation, and substantially ease the compliance burden for creditors.

2. Paragraph (a)(2)—Upon Request

The requirements are more detailed for creditors who provide a copy of an appraisal report only upon the written request of the applicant:

Time when requests must be made. The law provides that an applicant must make a request "within a reasonable period of time of the application." The legislative history states that a reasonable period of time depends on a balancing of factors, such as how long lenders routinely maintain loan files and how long a loan applicant might need to identify and act upon suspected discrimination.

The Board proposed that applicants must make written requests for an appraisal report no later than 90 days after receiving the notice from the creditor. The Board's proposal noted that the 90-day period for requesting an appraisal report could be viewed as too short, given the regulation's requirements for keeping records and the statute of limitations for filing an ECOA lawsuit.[2] The Board stated the belief that the proposed 90-day time limit would reasonably tie the period in which an appraisal report must be requested close to the period in which the applicant would be likely to request it, and in which the creditor likely would still have the files "on site."

Most commenters supported the proposed 90-day period, stating that it was a reasonable interpretation of the statute, which did not specify any period. Some commenters recommended that requests be required to be made in a shorter period of time, such as within 30 to 60 days of the date the consumer receives the notice of action taken on the application. The commenters argued that files may not be maintained in the creditor's office for 90 days, for example, if the loan is to be sold or if the files are transferred to another location. Some of the commenters questioned whether the valuation contained in the appraisal would have a similarly short "useful life" when market conditions cause property values to change frequently.

Other commenters opposed the proposal and urged the adoption of a time period for appraisal requests that is uniform with the 25-month record retention requirements in § 202.12 (12 months for business loans). These commenters believed that such a requirement would not impose a much greater burden than already exists since the appraisal must be maintained with the other records used in evaluating the application. Additionally, some commenters noted that a shorter time period for requesting appraisal reports than for retaining records could mean that appraisal reports could only be obtained through litigation, unless the institution voluntarily provided the report after that time.

Based on the comments and its analysis, the Board is adopting the 90-day time period that was proposed. The statutory language indicates an expectation that the period for requests should be reasonably close in time to the application. The 90-day rule should provide applicants the right to request a copy of the appraisal report during the time they are most likely to be interested in receiving it—around the time the application has been made and the appraisal has been conducted and paid for. A 90-day period also should not present significant compliance difficulties, especially since the final rule provides greater flexibility in how soon the report must be provided following a request.

Time when appraisal reports must be provided. The law also states that a creditor must "promptly" furnish a copy of the appraisal report. The Board proposed requiring the creditor to provide a copy of the report within 15 days of receiving a written request or within 15 days of obtaining an appraisal report, whichever occurs later. While

[2] An aggrieved applicant may file suit for an alleged ECOA violation up to two years from the date of the alleged violation. Furthermore, under § 202.12 of Regulation B, creditors are required to maintain loan files for up to 25 months (12 months for business credit) from the time they provide the applicant with a notice of the action taken on the application or a notice of incompleteness, as provided in § 202.9.

many commenters on this provision thought that the 15-day period was a reasonable interpretation of the statute, many other commenters recommended a longer period (with most suggesting a 30-day period). These commenters believed a longer time was necessary for lenders who do not maintain loan files in their office. After consideration of the public comments, the Board has revised the proposal to provide greater flexibility in the final rule. The regulation does not set a specific time by which an appraisal report must be provided. Instead, the regulation requires creditors to provide copies of appraisal reports "promptly," which it states will be 30 days, but which may be longer in exceptional circumstances.

Some commenters requested that the Board clarify that the timing rule apply only after the latest of three events: the request, receipt of the appraisal by the lender, and the applicant's reimbursement of the creditor for the cost of the appraisal. The Board agrees that this is the appropriate way to measure the time after which the creditor must "promptly" provide a copy of the report, and the final rule clarifies this.

Notice of Right to Copy of Appraisal

The amendments to ECOA do not specify that creditors shall notify applicants of their right to receive a copy of the appraisal report. The Board proposed that applicants for credit to be secured by a dwelling should be provided a written notice of their right to receive a copy of the appraisal report. This notice generally was to be given no later than 15 days after the creditor received the application. In proposing the notice requirement, the Board noted the Congress's belief that access to appraisal reports might help in detecting credit discrimination associated with the appraisal of property. The Board also noted that the notice would be particularly important to applicants if there has been a lender practice of not making appraisals available to applicants.

Most commenters opposed the proposed notice requirement because of the additional paperwork burden that it would impose and the fact that the Congress did not require it. Some commenters opposed the notice requirement on the general grounds that the cumulative effect of disclosure rules is to overburden the industry. At the other end of the spectrum, a few commenters including a state consumer protection agency recommended that the final regulations require notification to all applicants and a second notice to applicants whose loans are denied.

While the notice would impose some burden, the Board believes that it is outweighed by the consumer benefit from receiving the notice. If the notification were to be included on notices of action taken on a consumer's loan application (required by Regulation B), Truth in Lending disclosures, or on application or other forms (instead of creating a separate disclosure), the compliance costs would be limited to the one-time incremental cost of revising documents to add the notice.

After review of the public comments, the Board believes greater effect to the ECOA appraisal amendments is achieved by requiring that applicants be notified of their right to a copy of the appraisal report, as proposed. In the Board's view, it is important that this minimal notice be given to applicants in light of the Congress's concern about potential discrimination in the appraisal process. It is also important to notify all consumers of their statutory right to a copy of their appraisal, given the anecdotal evidence (confirmed by the commenters) that appraisals previously were not made available to applicants upon request.[3] Therefore, pursuant to the Board's authority in section 703 of the ECOA, creditors will be required to provide all applicants with written notice of the right to receive a copy of the appraisal report. As stated above, the notice need not be given by creditors who automatically provide copies to all applicants. To reduce the potential paperwork burden of the notice requirement, the Board will not require that the notice be provided in a form the consumer can keep, as was proposed. Furthermore, in response to commenters' suggestions for flexibility on timing, the rule would permit creditors to provide this notice as early as the time of application. They may also provide the notice later, but not later than at the time they notify an applicant of the action they have taken on the application. (Under § 202.9 of the regulation, creditors must notify applicants of their approval of, counteroffer to, or adverse action on an application within 30 days of receipt of a completed application.) The notice may be included on or with the adverse action notice, the application, or other documents.

Reimbursement. The statute permits a creditor to require reimbursement from the applicant for the cost of the appraisal before a copy is provided. Many commenters responded to the Board's request for information about the fees that may be charged for a copy of an appraisal. Most commenters that addressed the issue stated that all or part of the cost of having the appraisal conducted is imposed on the applicant. According to several commenters, no other fees are imposed for providing a copy of the appraisal report. Many commenters who charge consumers for having the appraisal performed asked the Board to clarify whether fees for providing a copy of the appraisal (for example, copying fees and postage) could be imposed following the adoption of the final rule.

The statute permits the creditor to be reimbursed for the cost of the appraisal and the final rule reflects that. This provision permits a creditor to require the consumer to pay for the cost of the appraisal prior to providing a copy. "Reimbursement" would not be allowed as a condition for providing a copy of the appraisal if the fee has already been paid by the consumer—for example, as part of the application fee.

The final rule also permits the creditor to require reimbursement of photocopy and postage costs that are incurred in providing the copy of the report, unless prohibited by state or other law.

Paragraph (b)—Credit Unions

The proposal excepted from the requirements creditors that provide appraisal reports pursuant to NCUA regulations, in keeping with the legislative history to the ECOA amendments. (See S. Rep. No. 167 at 90.) The final rule exempts credit unions from the provisions of § 202.5a if they are subject to, and comply with, the provisions of the NCUA regulations relating to making appraisals available upon request. 12 CFR 701.31(c)(5).

Section 202.14—Enforcement, Penalties, and Liabilities

Paragraph (b)—Penalties and Liabilities

The Board proposed that changes made to section 706 of the ECOA by FDICIA be incorporated into Regulation B. The language of the final rule differs slightly from the proposed text for clarity, but the meaning is unchanged; federal financial supervisory agencies must refer suspected pattern and practice discrimination cases to the DOJ. In addition, the agencies must notify HUD when they have reason to believe violations of the ECOA have occurred that may also constitute violations of the FHA, unless the matter has been referred to the DOJ.

[3] In the proposal, the Board asked creditors whether they currently provided appraisal reports automatically. Nearly 30 commenters addressed the issue. About ten of those stated they routinely provide appraisal reports to consumers.

Appendix C—Sample Disclosure Forms

A sample disclosure notice, Form C-9, has been added to Appendix C. Proper use of this form satisfies compliance with § 202.5a of Regulation B. Creditors may design their own form, or add to or modify the model form, to reflect their individual policies and procedures. For example, if a creditor wants to give applicants the option to call and leave their name and the address to which an appraisal report should be sent, the creditor may modify the notice accordingly. The reference in the proposed model form to telephone requests for a copy of the appraisal report has been deleted, however, to respond to comments expressing concern that it could be viewed as requiring telephone requests to be honored. In addition, for brevity, the model form has been revised to eliminate the reference to reimbursing creditors for the cost of the appraisal and copies of the report (although such a reference may be included with the notice).

(3) Economic Impact Statement

The Board's Division of Research and Statistics has prepared an economic impact statement on the proposed revisions to Regulation B. A copy of the analysis may be obtained from Publications Services, Board of Governors of the Federal Reserve System, Washington, DC 20551, at (202) 452-3245.

(4) Paperwork Reduction Act

In accordance with section 3507 of the Paperwork Reduction Act of 1980 (44 U.S.C. 35; 5 CFR 1320.13), the proposed information collection was reviewed by the Board under the authority delegated to it by the Office of Management and Budget after considering comments received during the public comment period.

A number of commenters believed that complying with the proposal would place significant paperwork burdens on institutions, particularly small institutions. Some expressed concern about the volume and variety of disclosures provided to consumers for credit transactions secured by residential real property, and the potential for consumer confusion.

A few commenters reacted to the specific burden estimates that appeared in the proposal. They believed that the estimates underreported the burden, particularly the time associated with responding to requests for copies of appraisal reports. The commenters questioned whether institutions typically could retrieve and review files, then copy and send appraisal reports in 5 minutes, as proposed.

In response to these comments, the Board has adjusted the burden estimates that were made in the proposal by increasing the estimated time needed to respond to requests for appraisal reports.

The requirements will apply to both large and small mortgage lenders. The impact on small creditors will depend upon whether lenders provide appraisals as a matter of course. The model disclosure form in the regulation will somewhat ease compliance burdens on the lenders. In addition, lenders that regularly provide appraisal reports to applicants (whether the loan is approved or denied) need not comply with the notice requirement of the regulation.

The following information about paperwork burden relates only to the effect of the proposal on state member banks of the Federal Reserve System. Lenders that are subject to Regulation B other than state member banks are supervised by other Federal agencies. For purposes of the Paperwork Reduction Act, these agencies will report their own estimates of the paperwork burden imposed by the new ECOA requirement.

The Board estimates that the disclosure requirement will result in an annual reporting burden of about 23,000 hours for state member banks.

Proposed Information Collection

Report title: Recordkeeping and Disclosure Requirements in Connection with Regulation B (Equal Credit Opportunity)

Report number: Not applicable

OMB docket number: 7100-0201

Frequency: As needed

Reporters: State member banks

	Number of records subject to requirement	×	Estimated time per response (minutes)	=	Estimated total number of hours of annual reporting burden
Appraisal report upon request	125,000		10		20,800
Notice of right to appraisal	625,000		.25		2,600

List of Subjects in 12 CFR Part 202

Aged, Banks, Banking, Civil rights, Credit, Marital status discrimination, Penalties, Religious discrimination, Reporting and recordkeeping requirements, Sex discrimination.

For the reasons set forth in the preamble, and pursuant to authority granted in 15 U.S.C. 1691b of the ECOA, the Board amends 12 CFR part 202 as follows:

PART 202—EQUAL CREDIT OPPORTUNITY (REGULATION B)

The authority citation for part 202 continues to read as follows:

Authority: 15 U.S.C. 1691-1691f.

2. Section 202.1 is amended by revising the last sentence of paragraph (b) to read as follows:

§ 202.1 Authority, scope, and purpose.

* * * * *

(b) * * * The regulation also requires creditors to notify applicants of action taken on their applications; to report credit history in the names of both spouses on an account; to retain records of credit applications; to collect information about the applicant's race and other personal characteristics in applications for certain dwelling-related loans; and to provide applicants with copies of appraisal reports used in connection with credit transactions.

3. Section 202.5a is added to read as follows:

§ 202.5a Rules on providing appraisal reports.

(a) *Providing appraisals.* A creditor shall provide a copy of the appraisal report used in connection with an application for credit that is to be secured by a lien on a dwelling. A creditor shall comply with either paragraph (a)(1) or (a)(2) of this section.

(1) *Routine delivery.* A creditor may routinely provide a copy of the appraisal report to an applicant (whether credit is granted or denied or the application is withdrawn).

(2) *Upon request.* A creditor that does not routinely provide appraisal reports shall provide a copy upon an applicant's written request.

(i) *Notice.* A creditor that provides appraisal reports only upon request

shall notify an applicant in writing of the right to receive a copy of an appraisal report. The notice may be given at any time during the application process but no later than when the creditor provides notice of action taken under § 202.9 of this part. The notice shall specify that the applicant's request must be in writing, give the creditor's mailing address, and state the time for making the request as provided in paragraph (a)(2)(ii) of this section.

(ii) *Delivery.* A creditor shall mail or deliver a copy of the appraisal report promptly (generally within 30 days) after the creditor receives an applicant's request, receives the report, or receives reimbursement from the applicant for the report, whichever is last to occur. A creditor need not provide a copy when the applicant's request is received more than 90 days after the creditor has provided notice of action taken on the application under § 202.9 of this part or 90 days after the application is withdrawn.

(b) *Credit unions.* A creditor that is subject to the regulations of the National Credit Union Administration on making copies of appraisals available is not subject to this section.

(c) *Definitions.* For purposes of paragraph (a) of this section, the term *dwelling* means a residential structure that contains one to four units whether or not that structure is attached to real property. The term includes, but is not limited to, an individual condominium or cooperative unit, and a mobile or other manufactured home. The term *appraisal report* means the document(s) relied upon by a creditor in evaluating the value of the dwelling.

4. Section 202.14 is amended by revising paragraph (b)(3) and by adding paragraphs (b)(4) and (b)(5) to read as follows:

§ 202.14 Enforcement, penalties and liabilities.

* * * * *

(b) *Penalties and liabilities.* * * *

* * * * *

(3) If an agency responsible for administrative enforcement is unable to obtain compliance with the act or this part, it may refer the matter to the Attorney General of the United States. In addition, if the Board, the Comptroller of the Currency, the Federal Deposit Insurance Corporation, the Office of Thrift Supervision, or the National Credit Union Administration has reason to believe that one or more creditors engaged in a pattern or practice of discouraging or denying applications in violation of the act or this part, the agency shall refer the matter to the Attorney General. Furthermore, the agency may refer a matter to the Attorney General if the agency has reason to believe that one or more creditors violated section 701(a) of the act.

(4) On referral, or whenever the Attorney General has reason to believe that one or more creditors engaged in a pattern or practice in violation of the act or this regulation, the Attorney General may bring a civil action for such relief as may be appropriate, including actual and punitive damages and injunctive relief.

(5) If the Board, the Comptroller of the Currency, the Federal Deposit Insurance Corporation, the Office of Thrift Supervision, or the National Credit Union Administration has reason to believe (as a result of a consumer complaint, conducting a consumer compliance examination, or otherwise) that a violation of the act or this part has occurred which is also a violation of the Fair Housing Act, and the matter is not referred to the Attorney General, the agency shall notify:

(i) The Secretary of Housing and Urban Development; and

(ii) The applicant that the Secretary of Housing and Urban Development has been notified and that remedies for the violation may be available under the Fair Housing Act.

* * * * *

5. Appendix C to Part 202 is amended in the first paragraph of the introduction by revising the first sentence and adding a sentence at the end; in the last paragraph of the introduction by adding a sentence at the end; and by adding sample Form C–9 to read as follows:

Appendix C to Part 202—Sample Notification Forms

This appendix contains nine sample notification forms. * * * Form C–9 is designed for use in notifying an applicant of the right to receive a copy of an appraisal under § 202.5a.

* * * * *

* * * Proper use of Form C–9 will satisfy the requirements of § 202.5a of this part.

* * * * *

Form C–9—Sample Disclosure of Right to Receive a Copy of an Appraisal

You have the right to a copy of the appraisal report used in connection with your application for credit. If you wish a copy, please write to us at the mailing address we have provided. We must hear from you no later than 90 days after we notify you about the action taken on your credit application or you withdraw your application.

[In your letter, give us the following information:]

By order of the Board of Governors of the Federal Reserve System, December 9, 1993.

William W. Wiles,

Secretary of the Board.

[FR Doc. 93–30536 Filed 12–15–93; 8:45 am]

BILLING CODE 6210–01–P

DEPARTMENT OF TRANSPORTATION

Federal Aviation Administration

14 CFR Part 39

[Docket No. 93–NM–190–AD; Amendment 39–8770; AD 93–25–04]

Airworthiness Directives; Gulfstream Model G–1159 (G-II) Series Airplanes Equipped With Aviation Partners Winglets Manufactured in Accordance With Supplemental Type Certificate (STC) SA5964NM

AGENCY: Federal Aviation Administration, DOT.

ACTION: Final rule; request for comments.

SUMMARY: This amendment adopts a new airworthiness directive (AD) that is applicable to certain Gulfstream Model G–1159 (G-II) series airplanes. This action requires either removal of certain winglets or the imposition of certain limitations for continued flight operations without removal of these winglets. This amendment is prompted by the results of a static test during which one winglet failed approximately at limit load (50 percent short of ultimate load). The actions specified in this AD are intended to prevent in-flight failure of one or both winglets, which could result in a potential unsafe flutter condition and reduced controllability of the airplane.

EFFECTIVE DATE: January 3, 1994.

Comments for inclusion in the Rules Docket must be received on or before February 14, 1994.

ADDRESSES: Submit comments in triplicate to the Federal Aviation Administration (FAA), Transport Airplane Directorate, ANM–103, Attention: Rules Docket No. 93–NM–190–AD, 1601 Lind Avenue SW., Renton, Washington 98055–4056.

FOR FURTHER INFORMATION CONTACT: Phil Forde, Aerospace Engineer, Airframe Branch, ANM–120S, FAA, Transport Airplane Directorate, Seattle Aircraft Certification Office, 1601 Lind Avenue SW., Renton, Washington 98055–4056; telephone (206) 227–2771; fax (206) 227–1181.

SUPPLEMENTARY INFORMATION: Recently, the FAA conducted a post-certification audit of winglets that were

manufactured by Aviation Partners in accordance with Supplemental Type Certificate (STC) SA5964NM, and installed on certain Gulfstream Model G–1159 (G-II) series airplanes. The results of this audit revealed, and the FAA concluded, that the potential may exist for these winglets to be deficient in meeting the strength requirements of the Federal Aviation Regulations (FAR). In the subsequent static testing conducted by Aviation Partners, a winglet manufactured in accordance with STC SA5964NM failed approximately at limit load, which is 50 percent short of ultimate load. This condition, if not corrected, could result in the failure of a winglet or winglets during flight.

The winglets are "hard" attached, or permanently fastened, and are integrated into the construction of the wing. Therefore, if failure of one or both winglets were to occur during flight, portions of the winglet may remain on the wing, act as a flutter vane, and induce a potentially unsafe flutter condition. This situation could lead to reduced controllability of the airplane.

Since an unsafe condition has been identified that is likely to exist or develop on other Gulfstream Model G–1159 (G–II) series airplanes of the same type design, this AD is being issued to prevent in-flight failure of winglets that were manufactured by Aviation Partners in accordance with STC SA5964NM and installed on these airplanes. This AD requires that affected operators accomplish one of two specific actions:

1. The removal of these particular winglets and restoration of the airplane to its original type design, followed by removal of the Airplane Flight Manual (AFM) limitation previously imposed by STC SA5964NM; or

2. Revision of the Limitations Section of the FAA-approved AFM to impose gross operating weight restrictions and/or operating speed restrictions for continued flight operations (without removal of these winglets).

Since a situation exists that requires the immediate adoption of this regulation, it is found that notice and opportunity for prior public comment hereon are impracticable, and that good cause exists for making this amendment effective in less than 30 days.

Comments Invited

Although this action is in the form of a final rule that involves requirements affecting flight safety and, thus, was not preceded by notice and an opportunity for public comment, comments are invited on this rule. Interested persons are invited to comment on this rule by submitting such written data, views, or arguments as they may desire.

Communications shall identify the Rules Docket number and be submitted in triplicate to the address specified under the caption **ADDRESSES.** All communications received on or before the closing date for comments will be considered, and this rule may be amended in light of the comments received. Factual information that supports the commenter's ideas and suggestions is extremely helpful in evaluating the effectiveness of the AD action and determining whether additional rulemaking action would be needed.

Comments are specifically invited on the overall regulatory, economic, environmental, and energy aspects of the rule that might suggest a need to modify the rule. All comments submitted will be available, both before and after the closing date for comments, in the Rules Docket for examination by interested persons. A report that summarizes each FAA-public contact concerned with the substance of this AD will be filed in the Rules Docket.

Commenters wishing the FAA to acknowledge receipt of their comments submitted in response to this notice must submit a self-addressed, stamped postcard on which the following statement is made: "Comments to Docket Number 93–NM–190–AD." The postcard will be date stamped and returned to the commenter.

The regulations adopted herein will not have substantial direct effects on the States, on the relationship between the national government and the States, or on the distribution of power and responsibilities among the various levels of government. Therefore, in accordance with Executive Order 12612, it is determined that this final rule does not have sufficient federalism implications to warrant the preparation of a Federalism Assessment.

The FAA has determined that this regulation is an emergency regulation that must be issued immediately to correct an unsafe condition in aircraft, and is not a "significant regulatory action" under Executive Order 12866. It has been determined further that this action involves an emergency regulation under DOT Regulatory Policies and Procedures (44 FR 11034, February 26, 1979). If it is determined that this emergency regulation otherwise would be significant under DOT Regulatory Policies and Procedures, a final regulatory evaluation will be prepared and placed in the Rules Docket. A copy of it, if filed, may be obtained from the Rules Docket at the location provided under the caption **ADDRESSES.**

List of Subjects in 14 CFR Part 39

Air transportation, Aircraft, Aviation safety, Safety.

Adoption of the Amendment

Accordingly, pursuant to the authority delegated to me by the Administrator, the Federal Aviation Administration amends 14 CFR part 39 of the Federal Aviation Regulations as follows:

PART 39—AIRWORTHINESS DIRECTIVES

1. The authority citation for part 39 continues to read as follows:

Authority: 49 U.S.C. App. 1354(a), 1421 and 1423; 49 U.S.C. 106(g); and 14 CFR 11.89.

§ 39.13 [Amended]

2. Section 39.13 is amended by adding the following new airworthiness directive:

93–25–04 Gulfstream: Amendment 39–8770. Docket 93–NM–190–AD.

Applicability: Model G–1159 (G–II) series airplanes equipped with Aviation Partners winglets manufactured in accordance with Supplemental Type Certificate (STC) SA5964NM, certificated in any category.

Compliance: Required as indicated, unless accomplished previously.

To prevent in-flight failure of one or both winglets, and a resultant unsafe flutter condition of the airplane, accomplish the following:

(a) Within 10 days after the effective date of this AD, accomplish the requirements of either paragraph (a)(1) or (a)(2) of this AD.

(1) Remove the Aviation Partners winglets manufactured in accordance with STC SA5964NM and, prior to further flight, restore the airplane to its original type design. The FAA-approved Airplane Flight Manual (AFM) limitation, previously imposed by STC SA5964NM, may be removed following removal of these winglets. Or

(2) Revise the Limitations Section of the FAA-approved AFM to restrict the gross operating weight and/or operating speed in accordance with a method approved by the Manager, Seattle Aircraft Certification Office (ACO), FAA, Transport Airplane Directorate.

(b) An alternative method of compliance or adjustment of the compliance time that provides an acceptable level of safety may be used if approved by the Manager, Seattle Aircraft Certification Office (ACO), FAA, Transport Airplane Directorate. Operators shall submit their requests through an appropriate FAA Principal Maintenance Inspector, who may add comments and then send it to the Manager, Seattle ACO.

Note: Information concerning the existence of approved alternative methods of compliance with this AD, if any, may be obtained from the Seattle ACO.

(c) Special flight permits may be issued in accordance with FAR 21.197 and 21.199 to operate the airplane to a location where the

requirements of this AD can be accomplished.

(d) This amendment becomes effective on January 3, 1994.

Issued in Renton, Washington, on December 10, 1993.

Bill R. Boxwell,

Acting Manager, Transport Airplane Directorate, Aircraft Certification Service.

[FR Doc. 93-30651 Filed 12-15-93; 8:45 am]

BILLING CODE 4910-13-P

DEPARTMENT OF COMMERCE

National Oceanic and Atmospheric Administration

15 CFR Part 943

[Docket No. 80851-1105]

RIN 0648-AB49

Flower Garden Banks National Marine Sanctuary Regulations

AGENCY: Office of Ocean and Coastal Resource Management (OCRM), National Ocean Service (NOS), National Oceanic and Atmospheric Administration (NOAA), Commerce (DOC).

ACTION: Notice of effective date.

SUMMARY: On November 20, 1991, the Under Secretary of Commerce for Oceans and Atmosphere transmitted the notice of designation for the Flower Garden Banks National Marine Sanctuary to Congress. The Sanctuary is two separate areas of ocean waters over and surrounding the East and West Flower Garden Banks, and the submerged lands thereunder including the Banks, in the northwestern Gulf of Mexico. The area designated at the East Bank is located approximately 120 nautical miles south-southwest of Cameron, Louisiana, and encompasses 19.20 square nautical miles. The area designated at the West Bank is located approximately 110 nautical miles southeast of Galveston, Texas, and encompasses 22.50 square nautical miles. The notice of designation and implementing rules were published on December 5, 1991 (56 FR 63634). They could not take effect until Congress had 45 days of continuous session to review the terms of designation, or until legislation providing for designation was signed into law.

On March 9, 1992, the President signed into law Public Law 102-251, which, among other matters, provides that the designation of the Flower Garden Banks National Marine Sanctuary took effect on January 17, 1992. Because Public Law 102-251 does not specifically provide an effective date for the Sanctuary regulations, this document establishes the effective date of the regulations.

EFFECTIVE DATE: The final regulations in 15 CFR part 943 published on December 5, 1991 (56 FR 63634) shall take effect on January 18, 1994.

FOR FURTHER INFORMATION CONTACT: Edward Lindelof, Gulf and Caribbean Regional Manager, Sanctuaries and Reserves Division, Office of Ocean and Coastal Resource Management, National Ocean Service, National Oceanic and Atmospheric Administration, 1305 East West Highway, SSMC-4, Silver Spring, MD 20910 (301/713-3137).

Federal Domestic Assistance Catalog Number 11.429 Marine Sanctuary Program.

Dated: December 9, 1993.

W. Stanley Wilson,

Assistant Administrator for Ocean Services and Coastal Zone Management.

[FR Doc. 93-30599 Filed 12-15-93; 8:45 am]

BILLING CODE 3510-08-M

DEPARTMENT OF HEALTH AND HUMAN SERVICES

Food and Drug Administration

21 CFR Part 520

Oral Dosage Form New Animal Drugs; Roxarsone Tablets and Liquid

AGENCY: Food and Drug Administration, HHS.

ACTION: Final rule.

SUMMARY: The Food and Drug Administration (FDA) is amending the animal drug regulations to reflect codification of two previously approved new animal drug applications (NADA's) held by I. D. Russell Co., Laboratories. The NADA's provide for the use of roxarsone tablets and liquid in the drinking water of growing chickens and turkeys for improved rate of weight gain, improved feed efficiency, and improved pigmentation.

EFFECTIVE DATE: December 16, 1993.

FOR FURTHER INFORMATION CONTACT: Dianne T. McRae, Center for Veterinary Medicine (HFV-102), Food and Drug Administration, 7500 Standish Pl., Rockville, MD 20855, 301-594-1623.

SUPPLEMENTARY INFORMATION: The I. D. Russell Co., Laboratories, 1301 Iowa Ave., Longmont, CO 80501, is sponsor of approved NADA's 6-019 and 6-081 for roxarsone tablets and liquid, respectively. The tablets and liquid are used to prepare medicated drinking water containing roxarsone at a concentration of 72 milligrams per gallon. Consumption of the medicated drinking water by chickens and turkeys throughout their growing period results in improved rate of weight gain, improved feed efficiency, and improved pigmentation. NADA 6-019 (tablets) was originally approved on August 30, 1946, and NADA 6-081 (liquid) was originally approved on November 14, 1946. FDA is amending the regulations in § 520.2088 (21 CFR 520.2088) by adding new paragraph (c) and by adding new § 520.2089 to reflect these NADA's.

The agency has determined under 21 CFR 25.24(d)(1)(i) that this action is of a type that does not individually or cumulatively have a significant effect on the human environment. Therefore, neither an environmental assessment nor an environmental impact statement is required.

In accordance with the freedom of information (FOI) provisions of part 20 (21 CFR part 20) and § 514.11(e)(2)(i) (21 CFR 514.11(e)(2)(i)) for NADA's approved prior to July 1, 1975, FOI summaries of safety and effectiveness data and information submitted to support approval of the applications are not required.

List of Subjects in 21 CFR Part 520

Animal drugs.

Therefore, under the Federal Food, Drug, and Cosmetic Act and under authority delegated to the Commissioner of Food and Drugs and redelegated to the Center for Veterinary Medicine, 21 CFR part 520 is amended as follows:

PART 520—ORAL DOSAGE FORM NEW ANIMAL DRUGS

1. The authority citation for 21 CFR part 520 continues to read as follows:

Authority: Sec. 512 of the Federal Food, Drug, and Cosmetic Act (21 U.S.C. 360b).

2. Section 520.2088 is amended by adding new paragraph (c) to read as follows:

§ 520.2088 Roxarsone tablets.

* * * * *

(c)(1) *Specifications.* Each tablet contains 72 milligrams of roxarsone (3-nitro-4-hydroxyphenylarsonic acid).

(2) *Sponsor.* See No. 017144 in § 510.600(c) of this chapter.

(3) *Related tolerances.* See § 556.60 of this chapter.

(4) *Conditions of use in growing chickens and growing turkeys*—(i) *Amount.* 1 tablet in each gallon of drinking water (0.002 percent roxarsone).

(ii) *Indications for use.* For improved rate of weight gain, improved feed efficiency, and improved pigmentation.

(iii) *Limitations.* Administer continuously throughout growing

period. Do not administer to chickens producing eggs for human consumption. Withdraw 5 days before slaughter. Use as sole source of organic arsenic. Overdosage or the lack of water intake may result in weakness or paralysis of legs.

3. New § 520.2089 is added to read as follows:

§ 520.2089 Roxarsone liquid.

(a) *Specifications.* Each teaspoon (5 milliliters) of solution contains 72 milligrams of roxarsone (3-nitro-4-hydroxyphenylarsonic acid).

(b) *Sponsor.* See No. 017144 in § 510.600(c) of this chapter.

(c) *Related tolerances.* See § 556.60 of this chapter.

(d) *Conditions of use in growing chickens and growing turkeys*—(1) *Amount.* 1 teaspoon (5 milliliters) to each gallon of drinking water (0.002 percent roxarsone).

(2) *Indications for use.* For improved rate of weight gain, improved feed efficiency, and improved pigmentation.

(3) *Limitations.* Administer continuously throughout growing period. Do not administer to chickens producing eggs for human consumption. Withdraw 5 days before slaughter. Use as sole source of organic arsenic. Overdosage or the lack of water intake may result in weakness or paralysis of legs.

Dated: December 8, 1993.

Richard H. Teske,

Acting Director, Center for Veterinary Medicine.

[FR Doc. 93-30610 Filed 12-15-93; 8:45 am]

BILLING CODE 4160-01-F

DEPARTMENT OF TRANSPORTATION

Coast Guard

33 CFR Part 1

CGD 78-82

RIN 2115-AE67

Enforcement; Civil and Criminal Penalty Proceedings

AGENCY: Coast Guard, DOT.

ACTION: Adoption of interim rule as final.

SUMMARY: This rule adopts as final, the Coast Guard regulations contained in 33 CFR part 1, subpart 1.07—Enforcement; Civil and Criminal Penalty Proceedings which were published as an interim final rule on November 20, 1978. The Coast Guard had anticipated finalizing the interim final rule after a comment period and a six-month evaluation of effectiveness. However, due to an administrative oversight, the rule was never finalized.

EFFECTIVE DATE: December 16, 1993.

FOR FURTHER INFORMATION CONTACT: LCDR Michael Emge, Maritime and International Law Division, Office of the Chief Counsel, at (202) 267-1527.

SUPPLEMENTARY INFORMATION:

Drafting Information

The principal persons involved in drafting this document are LCDR Michael Emge, Project Manager, and C.G. Green, Project Counsel.

Regulatory History

On November 20, 1978, the Coast Guard published in the **Federal Register** an interim final rule entitled "Enforcement; Civil and Criminal Penalty Proceedings" (43 CFR 54186). The regulations described the Coast Guard civil penalty process and how criminal cases are referred to the U.S. Attorney for prosecution. The regulations became effective three months after publication, on February 20, 1979. The Coast Guard received fourteen comments on the interim rule.

Background and Purpose

The interim final regulations effective on February 20, 1979, have proved workable and an improvement over the previous procedures. Even though several amendments were published as final rules, none of these amendments finalized the interim final rule. The interim rule, however, remained effective and has, with its several amendments, comprised the Coast Guard's civil penalty system since 1979. The amendments are discussed below.

This rule finalizes the regulations, as amended, and closes the docket on this rulemaking. The text of the final rule as adopted herein appears in the Code of Federal Regulations for 33 CFR parts 1 to 124, July 1, 1993 edition. Since these rules have been effective since 1979, and because their adoption as a final rule does not change them, good cause exists to make the final rule effective in fewer than thirty days.

Discussion of amendments: On June 5, 1985, the Coast Guard published (50 FR 23688) a rule amending 33 CFR part 1, subpart 1.07. The rule implemented a one year test of the voluntary Marine Safety Reporting Program (MSRP) to determine the desirability and feasibility of an ongoing MSRP. The MSRP was designed to collect information from commercial vessel operators about near mishaps or difficulties encountered with the navigation and control of commercial vessels. The rule encouraged voluntary participation in the MSRP by providing relief from possible penalty action for certain participants. The rule was effective June 1, 1985.

On May 29, 1986, the Coast Guard published a final rule (51 FR 19329) terminating the MSRP. This rule was effective June 15, 1986, permitting a two week grace period for processing incident report forms submitted late in the program.

On May 11, 1987, minor revisions were published (52 FR 17554) to reflect realignment of the Coast Guard districts and internal reorganization. In this change, the requirement for a second copy of a petition to reopen a hearing was eliminated. Also, to provide Coast Guard District Commanders with more time to comment on a respondent's appeal of a Hearing Officer decision, the time frame for accepting a District Commander's comments was lengthened from 20 to 30 days. References to gender were also removed. The rule was effective on publication in the **Federal Register**.

On September 11, 1989, the regulations were again amended (54 FR 37613) as mandated by the Anti-Drug Abuse Amendments Act of 1988 (Pub. L. 100-690). This amendment added § 1.07-100 to 33 CFR part 1, subpart 1.07 to provide for the issuance of a summons to appear in lieu of the seizure of a commercial fishing industry vessel for violations involving the possession of personal use quantities of a controlled substance. This final rule was preceded by an April 10, 1989, notice of proposed rulemaking (54 FR 14250). Public comments were considered and the final rule was effective October 11, 1989.

None of these amendments specifically addressed the comments received on the interim final rule published in 1978, and none of the amendments specifically adopted the subpart as a final rule. The public docket on this rulemaking has remained open since publication of the interim rule, despite the subsequent amendments to the procedures as discussed above.

Discussion of Comments and Changes

Since the regulations in 33 CFR part 1, subpart 1.07 are solely rules of agency procedure and practice, 5 U.S.C. 553(b)[(3)](A) exempts them from the notice and comment rulemaking requirements of the Administrative Procedure Act. Although public notice and comment were not required, the Coast Guard invited public comment on the rules when they were published in 1978. In response to this request for

public comment, fourteen comments were received. Although the comment period officially closed September 1, 1979, the two comments received after that period were also considered. None of the comments, however, resulted in revisions to the interim rule. These comments are briefly discussed below.

One comment came from the author of an article which appeared in the August 1979 issue of Boating magazine. The article was a commentary on the November 20, 1978, civil penalty regulations and was entitled "The Coast Guard Wants to Be Your Prosecutor, Judge, and Jury." At least eight of the thirteen other public comments received appeared prompted by this magazine article. These comments agreed with the magazine article, but did not offer any additional substantive comments. The article's author suggested that the Coast Guard's civil penalty system short cut due process for several reasons. These reasons included: (1) The people that decide cases, Hearing Officers, are not impartial because they are Coast Guard officers; (2) the system does not provide for a hearing on the record; and (3) the Coast Guard is not required to prove the alleged violations and the process, in essence, makes a party guilty until that party proves their innocence. The Coast Guard disagrees with these characterizations of its civil penalty system.

Although Hearing Officers are Coast Guard officers, they are impartial. The regulations in 33 CFR 1.07–15(a) specifically state that the Hearing Officer has no other responsibility, direct or supervisory, for the investigation of cases referred for the assessment of civil penalties. Also, the Hearing Officer decides each case on the basis of the evidence before him, and must have no prior connection with the case. The Hearing Officer is solely responsible for the decision in each case referred to him. 33 CFR 1.07–15(b). To ensure Hearing Officer impartiality, the Coast Guard assigns personnel specifically to that position, outside of any Coast Guard program duties or influence.

The Coast Guard civil penalty process under 33 CFR part 1, subpart 1.07 does not provide for a hearing on the record, i.e., a hearing before an Administrative Law Judge and a transcript of the proceedings, because the statutes enforced under the civil penalty process do not require such hearings. The civil penalty process is designed to afford parties with appropriate due process and yet process numerous reports of alleged violations arising from the Coast Guard's law enforcement activities. The regulations do provide that an alleged violator, or "party," may request a hearing before the Hearing Officer, if desired. 33 CFR 1.07–25. The party may also have a transcript of that hearing prepared at the party's expense. 33 CFR 1.07–60(b). Coast Guard Hearing Officers process approximately 14,400 cases each year under these procedures. To provide a hearing on the record for each of these cases would create a significant administrative burden on the agency; it would greatly increase the costs for both the agency and parties; and it would slow case processing to an unacceptable level without providing significant improvement to the system. It is worthwhile to note Congress' recognition of the Coast Guard civil penalty process in the legislative history of 46 U.S.C. 2107, one of the Coast Guard's enforcement enabling authorities:

> The assessment of civil penalties under this section should not require an "on the record" hearing within the meaning of the Administrative Procedures Act (APA). It is intended that these civil penalties be assessed in a fair manner. However, the Committee recognizes that statutes passed in the last decade have involved the Coast Guard in tens of thousands of civil penalty enforcement cases and that it is necessary that the penalties be assessed efficiently. The Coast Guard's procedural regulations for assessing civil penalties ensure that the essential elements of due process, notice, and opportunity to be heard, are provided to alleged violators (see 33 CFR supbart 1.07). The more rigid and time-consuming procedures applicable to APA adjudications are unwarranted in the case of Coast Guard civil penalty assessment procedures and would seriously hamper the orderly enforcement of these administrative penalties.

H.R. Rep. No. 338, 98th Cong., 1st Sess. 132 (1983). For the reasons discussed above, the rules have not been changed to provide for hearings on the record.

The perceptions by commenters that the Coast Guard is not required to prove alleged violations and that the Coast Guard's civil penalty process makes a party guilty until that party proves his or her innocence are misunderstandings. When a Hearing Officer receives a violation case from a District Commander, the Hearing Officer makes a preliminary review of it. If after this review there appears to be sufficient evidence to proceed, the Hearing Officer then notifies the party of the alleged violation and the party's rights. 33 CFR 1.07–20. The party may then offer any relevant evidence or statements to rebut the allegation or otherwise exculpate the party. 33 CFR 1.07–55(b), (f). Rebuttal by the Coast Guard and a further response by the party may then take place. 33 CFR 1.07–55(c). After the evidence and any arguments are received by the Hearing Officer, the Hearing Officer makes a decision based on the record. If the weight of the evidence does not show that the alleged violation occurred and the party is the responsible entity, the Hearing Officer either remands or dismisses the case. 33 CFR 1.07–65(a). The burden of proving an alleged violation remains with the Coast Guard throughout the process. If appropriate, sufficient evidence to create a presumption of a violation will require the party to present evidence overcoming the presumption. However, the Coast Guard always bears the ultimate burden to prove an alleged violation. Additionally, appeals of civil penalty assessments to the Commandant are closely reviewed. If on appeal, the Hearing Officer's decision is not supported by substantial evidence in the case record, the case is either remanded or dismissed. Accordingly, no change to the rule has been made.

Another comment voiced support for the interim final rule but suggested that certain significant cases warrant review by a body other than the Coast Guard and the Department of Transportation. Judicial review authority does exist and need not be addressed in this rulemaking. The Administrative Procedures Act, 5 U.S.C. Chapter 7, provides authority and guidelines for federal court review of Coast Guard civil penalty actions.

One comment, from a large corporation, voiced support for the interim final rule, but suggested that the provision in 33 CFR 1.07–25 for responding within 30 days to a notice from a Hearing Officer of initiation of action, be lengthened to 60 days. The comment stated that additional time is needed to investigate the alleged violations and to get the Hearing Officer's letter to the person responsible for the party's reply. Based on its experience with the civil penalty system since 1979, the Coast Guard does not agree that the additional 30 days is necessary. Where good cause is shown and additional time is requested, Hearing Officers have typically provided additional time to accommodate a party's investigation or response to the allegations. Generally, the majority of parties do not need additional time to fully respond to the allegations. Accordingly, the 30 day requirement has remained.

Regulatory Evaluation: This rule is not a significant regulatory action under Executive Order 12866 and is not significant under the "Department of Transportation Regulatory Policies and Procedures" (44 FR 11040 February 26, 1979). The Coast Guard expects the

economic impact of this proposal to be so minimal that a full Regulatory Evaluation is unnecessary.

Federalism: This action has been analyzed in accordance with the principles and criteria contained in Executive Order 12612, and it has been determined that this rulemaking does not raise sufficient federalism implications to warrant the preparation of a Federalism Assessment.

Environment: Under section 2.B.2 of Commandant Instruction M16475.1B, this action is categorically excluded from further environmental documentation. A Categorical Exclusion Determination has been placed in the docket for this rulemaking.

List of Subjects in 33 CFR Part 1

Administrative practice and procedure, Authority delegations (Government agencies), Freedom of information, Penalties.

For the reasons set out in the preamble, the Coast Guard amends 33 CFR Part 1 as follows:

PART 1—[AMENDED]

1. The authority citation for 33 CFR part 1, subpart 1.07 continues to read as follows:

Authority: 14 U.S.C. 632; 49 CFR 1.46.

2. Subpart 1.07, which was revised as an interim rule except for the Appendix on November 20, 1978 (43 FR 54186), and amended on June 5, 1985 (50 FR 23688), May 29, 1986 (51 FR 19329), May 11, 1987 (52 FR 17554), and September 11, 1989 (54 FR 37613), is adopted, as amended, as a final rule.

Dated: December 10, 1993.

J.E. Shkor,

Chief Counsel.

[FR Doc. 93–30713 Filed 12–15–93; 8:45 am]

BILLING CODE 4910–14–M

---

33 CFR Part 80

[CGD 93–071]

RIN 2115–AE05

International Regulations for Preventing Collisions at Sea; 1972 COLREGS Demarcation Lines; Blind Pass, Near Fort Myers, FL

AGENCY: Coast Guard, DOT.

ACTION: Final rule.

SUMMARY: The Coast Guard is amending the regulations establishing lines of demarcation delineating those waters upon which mariners shall comply with the International Regulations for Preventing Collisions at Sea, 1972 (72 COLREGS) and those waters upon which mariners shall comply with Inland Navigation Rules by adding a boundary line in waters in Blind Pass, near Fort Myers, Florida. When the original lines were established, Blind Pass was not navigable. This action will clarify the status of the navigable waters in the subject area.

EFFECTIVE DATE: December 16, 1993.

ADDRESSES: Unless otherwise indicated, documents referenced in this preamble are available for inspection or copying at the office of the Executive Secretary, Marine Safety Council (G–LRA/3406) (CGD 93–071), U.S. Coast Guard Headquarters, 2100 Second Street SW., room 3406, Washington, DC 20593–0001 between 8 a.m. and 3 p.m., Monday through Friday, except Federal holidays. The telephone number is (202) 267–1477.

FOR FURTHER INFORMATION CONTACT: Mr. Jonathan Epstein, Navigation Rules and Information Branch, Office of Navigation Safety and Waterway Services, (202) 267–0352 or (202) 267–0357.

SUPPLEMENTARY INFORMATION:

Drafting Information

The principal persons involved in drafting this document are Jonathan Epstein, Project Manager, Office of Navigation Safety and Waterway Services, and Helen G. Boutrous, Project Counsel, Office of Chief Counsel.

Background and Purpose

The regulations in 33 CFR part 80 establish the lines of demarcation delineating those waters upon which mariners shall comply with the International Regulations for Preventing Collisions at Sea, 1972 (72 COLREGS) and those waters upon which mariners shall comply with the Inland Navigation Rules. The waters inside of the lines are Inland Rules waters. The waters outside the lines are COLREGS waters.

The regulations establishing COLREGS Demarcation Lines in 33 CFR part 80 were promulgated July 11, 1977 (42 FR 35782). Since that time, some of the lines have been redesignated to reflect geographic or marking changes (46 FR 28154, May 26, 1981 and 51 FR 7787, March 6, 1986).

On the west coast of Florida near Fort Myers and Punta Gorda there are a string of barrier Islands that separate Pine Island Sound from the Gulf of Mexico. Currently, 33 CFR 80.750 delineates lines of demarcation across several navigable channels between these barrier islands, making Pine Island Sound inland waters for the purposes of the Inland Navigation Rules. Blind Pass lies between the southern tip of Captiva Island and the northwestern tip of Sanibel Island and provides access from the Gulf of Mexico to Pine Island Sound (See NOAA Chart 11427 or 11426). Blind Pass was not navigable when the original demarcation lines were established. However, in the last several years, due to the shifting nature of these barrier islands, Blind Pass has opened and become a fairly stable channel used by commercial fishermen.

Because this channel is now navigable, the Coast Guard has determined that it is appropriate to establish a demarcation line to clarify the status of the subject area. Existing COLREG demarcation lines designate Pine Island Sound as inland waters. To remain consistent with this designation, and to clarify the status of the recently navigable Blind Pass, the Coast Guard is establishing a line formed by the centerline of the highway bridge over Blind Pass in addition to the existing lines drawn across Redfish and Captiva Passes parallel to the general trend of the seaward, highwater shorelines. The Coast Guard has chosen the fixed bridge crossing Blind Pass as the COLREGS demarcation line for several reasons: (1) The use of a fixed landmark, like a bridge, will provide a tangible, easy reference for the mariner; (2) the bridge is of recent construction and therefore is likely to remain in place for the foreseeable future; and (3) the shifting nature of these barrier islands makes delineation using points of land inadvisable.

33 CFR 80.753(a) delineates a COLREGS demarcation line in another pass bearing the name Blind Pass. This pass lies between Treasure Island and Long Key near St. Petersburg Florida, several hundred miles north of the Blind Pass between Captiva and Sanibel Islands. To prevent confusion, the Coast Guard is amending the description of this line by including the names of the nearby islands within the description. The position of the demarcation line in 33 CFR 80.753(a) remains unchanged.

This amendment will clarify the status of the newly navigable Blind Pass and will be an aid to The Florida Marine Patrol in its efforts to enforce fishing regulations. The Florida Administrative Code closes Pine Island Sound to net fishing from November 1 through January 31 each year.

Because this rule adds a line of demarcation to a newly navigable area that clearly falls within inland waters in accordance with existing demarcation lines, this action is considered to be administrative in nature. Accordingly, under 5 U.S.C. 553(b)(3)(B) notice and opportunity for public comment are

unnecessary and, in accordance with 5 U.S.C. 553(d)(3), good cause exists to publish this action as a final rule effective upon publication in the **Federal Register.**

Regulatory Assessment

This rule is not a significant regulatory action under Executive Order 12866 and not significant under the "Department of Transportation Regulatory Policies and Procedures" (44 FR 11040; February 26, 1979). This rule merely adds a line of demarcation to an area that falls clearly within inland waters. The Coast Guard expects the economic impact of this rule to be so minimal that a full Regulatory Assessment is unnecessary.

Small Entities

Under the Regulatory Flexibility Act (5 U.S.C. 601 *et seq.*) the Coast Guard must consider the economic impact on small entities of a rule for which a general notice of proposed rulemaking is required. "Small entities" include independently owned and operated small business that are not dominant in their field and that otherwise qualify as "small business concerns" under section 3 of the Small Business Act (15 U.S.C. 632). This rule does not require a general notice of proposed rulemaking and, therefore, is exempt from the regulatory flexibility requirements. although exempt, the Coast Guard has reviewed this rule for potential impact on small entities. This rule merely adds a demarcation line to clarify the status, consistent with existing lines of demarcation, of inland waters in the area of Pine Island Sound in Florida.

Therefore, the Coast Guard's position is that this rule will not have a significant economic impact on a substantial number of small entities.

Collection of Information

This rule contains no collection of information requirements under the Paperwork Reduction Act (44 U.S.C. 3501 *et seq.*).

Federalism

The Coast Guard has analyzed this rule in accordance with the principles and criteria contained in Executive Order 12612 and has determined that this rule does not have sufficient federalism implications to warrant the preparation of a Federalism Assessment. Under Federal law, authority to designate COLREGS lines of demarcation is vested in the Secretary of Transportation and delegated to the Coast Guard. Therefore, the Coast Guard intends this rule to preempt State action addressing this subject matter.

Environment

The Coast Guard considered the environmental impact of this rule and concluded that, under section 2.B2 of Commandant Instruction M16475.1B, this rulemaking is categorically excluded from further environmental documentation. As this rule is a clarification of existing lines there will be no impact on the environment. A Categorical Exclusion Determination is available in the docket for inspection or copying where indicated under **ADDRESSES.**

List of Subjects in 33 CFR Part 80

Navigation (water), Treaties, Waterways.

For the reasons set out in the preamble, the Coast Guard amends 33 CFR part 80 as follows:

PART 80—COLREGS DEMARCATION LINES

1. The authority citation for part 80 continues to read as follows

Authority: 14 U.S.C. 2; 14 U.S.C. 633; 33 U.S.C. 151(a); 49 CFR 1.46.

2. In § 80.750, paragraph (a) is revised to read as follows:

§ 80.750 Sanibel Island, FL to St. Petersburg, FL.

(a) A line formed by the centerline of the highway bridge over Blind Pass, between Captiva Island and Sanibel Island, and lines drawn across Redfish and Captiva Passes parallel to the general trend of the seaward, highwater shorelines.

* * * * *

2. In § 80.753, paragraph (a) is revised to read as follows:

§ 80.753 St. Petersburg, FL to Anclote, FL.

(a) A line drawn across Blind Pass, between Treasure Island and Long Key, parallel with the general trend of the seaward, highwater shoreline.

* * * * *

Dated: December 8, 1993.

W.J. Ecker,

Rear Admiral, U.S. Coast Guard, Chief, Office of Navigation Safety and Waterway Services.

[FR Doc. 93-30702 Filed 12-15-93; 8:45 am]

BILLING CODE 4910-14-M

---

33 CFR Part 117

[CGD07-93-111]

Drawbridge Operation Regulations, Atlantic Intracoastal Waterway, FL

AGENCY: Coast Guard, DOT.

ACTION: Notice of temporary deviation.

SUMMARY: At the request of Congressman E. Clay Shaw, Jr., the Coast Guard is hereby providing notice that the Florida Department of Transportation has been granted permission to temporarily deviate from regulations governing the opening of the East Sunrise Boulevard Drawbridge at Fort Lauderdale from December 1, 1993 to January 31, 1994, for the purpose of evaluating the reasonableness of possible changes to the permanent regulations. This deviation establishes a 15-minute opening schedule from 10 a.m to 6 p.m. daily which is intended to eliminate back-to-back openings that cause traffic delays. The 60-day test will determine whether a 15-minute opening schedule will improve the flow of highway traffic without unreasonably impacting navigation.

EFFECTIVE DATE: Comments must be received on or before January 30, 1994. This rule is effective on December 1, 1993 through January 30, 1994.

ADDRESSES: Comments may be sent to Commander (oan), Seventh Coast Guard District, 909 SE. 1st Avenue, Miami, Florida 33131-3050. The telephone number is 305-536-4103.

FOR FURTHER INFORMATION CONTACT: Mr. Brodie Rich, Project Manager, Bridge Section, at (305) 536-4103.

SUPPLEMENTARY INFORMATION: The Coast Guard granted a temporary deviation to the regulations for this drawbridge owned and operated by the Florida Department of Transportation (FDOT) presently opening on demand which allows FDOT not to open the draws from 10 a.m. to 6 p.m. daily except on the hour, quarter hour, half hour and three-quarter hour. This revised schedule is intended to eliminate back-to-back draw openings and decrease vehicular delays.

Request for Comments

The Coast Guard encourages interested persons to participate in this evaluation of possible changes to the regulations governing this bridge by submitting written data, views, or arguments to the address above. Persons submitting comments should include their name and address, identify this docket number [CGD07-93-111] and specific provisions to which each comment applies, and give reasons for each comment. Persons wanting acknowledgment of receipt of comments should enclose a stamped, self-addressed postcard or envelope.

At such time as it appears appropriate to propose a permanent change to the regulations, the Coast Guard plans to publish a notice of proposed rulemaking which will again request comments, and

which will state a different period for the consideration of comments for those proposed regulations.

Notice

Notice is hereby given that:

1. The Coast Guard has granted the Florida Department of Transportation, a temporary deviation from the operating requirements of 33 CFR 117.5 governing the East Sunrise Boulevard Drawbridge, for the purpose of evaluating possible changes to the permanent regulations.

2. This deviation from normal operating regulations is authorized in accordance with the provisions of title 33 of the Code of Federal Regulations § 117.43, for the purpose of evaluating a possible change to the current "on demand" operation. Under this deviation, the Sunrise Boulevard drawbridge need open only on the hour, quarter-hour, half-hour, and three-quarter hour from 10 a.m. to 6 p.m., daily.

3. In accordance with 33 CFR 117.261(a), public vessels of the United States, tugs with tows, and vessels in a situation where a delay would endanger life or property shall, upon proper signal, be passed through the draw at any time.

4. The 60-day trial period is scheduled to occur during the winter tourist season, when the beach areas experience the heaviest vehicular traffic and the greatest number of drawbridge openings. The daily 15-minute operating schedules will be in effect from 10 a.m. to 6 p.m. each day. When the test is completed, the results will be compared with the existing "on demand" opening schedule to determine which operating schedule best meets the needs of navigation, helps reduce vehicular traffic delays, and eliminates back-to-back openings.

5. This period of deviation is effective from December 1, 1993 through January 30, 1994.

Dated: November 24, 1993.

William P. Leahy,

Rear Admiral, U.S. Coast Guard Commander, Seventh Coast Guard District.

[FR Doc. 93-30705 Filed 12-15-93; 8:45 am]

BILLING CODE 4910-14-M

---

33 CFR Part 165

[CGD01-93-154]

RIN 2115-AA97

Safety Zone: Providence River, Providence, RI

AGENCY: Coast Guard, DOT.

ACTION: Temporary final rule.

SUMMARY: The Coast Guard is amending the temporary final rule published in the **Federal Register** on March 16, 1993 (58 FR 14151) to change the termination date of the safety zone established in the Providence River from December 31, 1993 to May 1, 1994.

EFFECTIVE DATE: December 16, 1993.

FOR FURTHER INFORMATION CONTACT: Lieutenant Walter Petig of Marine Safety Office Providence at (401) 435-2300.

SUPPLEMENTARY INFORMATION:

Drafting Information

The principal persons involved in drafting this regulation are Lieutenant W. Petig, Project Manager for the Coast Guard Captain of the Port, Providence, and Lieutenant Commander J. Stieb, Project Counsel for the First Coast Guard District Legal Office.

Regulatory History

Pursuant to 5 U.S.C. 553, a notice of proposed rulemaking was not published for this regulation and good cause exists for making it effective less than 30 days after **Federal Register** publication. The existing safety zone expires on December 31, 1993. Publishing a Notice of Proposed Rulemaking (NPRM) would be contrary to public interest since an extension in time for the existing safety zone is needed immediately to prevent a lapse in the regulations. A NPRM for a Regulated Navigation Area (RNA), which will replace the existing safety zone, was signed by the First Coast Guard District Commander on December 6, 1993. The Coast Guard intends to publish a final RNA prior to May 1, 1993.

Regulatory Assessment

This action is not considered a significant regulatory action under Executive Order 12866 and is not significant under "Department of Transportation Regulatory Policies and Procedures" (44 FR 11040, February 26, 1979).

Federalism

The Coast Guard has analyzed this proposal in accordance with the principles and criteria contained in Executive Order 12612 and has determined that this regulation does not raise sufficient federalism implications to warrant the preparation of a Federalism Assessment.

Environment

The environmental impact of the proposed rule has been evaluated using the Coast Guard's procedures for implementing the National Environmental Policy Act (Commandant Instruction M16475.1B). Under section 2.B.2.(c) of these procedures, it is concluded that this action is categorically excluded from further environmental documentation, since it is an action performed as part of Coast Guard operations to carry out statutory authority in the area of maritime safety and protection of the environment. A Categorical Exclusion Determination is available in the docket for inspection or copying.

List of Subjects in 33 CFR Part 165

Harbors, Marine safety, Navigation (water), Reporting and recordkeeping requirements, Security measures, Waterways.

Regulations

In consideration of the foregoing, part 165 of title 33, Code of Federal Regulations, is amended as follows:

PART 165—[AMENDED]

1. The authority citation for part 165 continues to read as follows:

Authority: 33 U.S.C. 1231; 50 U.S.C. 191; 33 CFR 1.05-1(g), 6.04-1, 6.04-6, and 160.5; 49 CFR 1.46.

2. Temporary § 165.T01-005 is amended, by revising paragraph (b) to read as follows:

§ 165.T01-005 Safety Zone: Providence River, Providence, RI.

* * * * *

(b) These regulations became effective at 8 a.m., February 19, 1993, and will terminate at 8 a.m., May 1, 1994, unless terminated sooner by the Coast Guard Captain of the Port, Providence.

* * * * *

Dated: December 9, 1993.

H.D. Robinson,

Captain, U.S. Coast Guard, Captain of the Port, Providence.

[FR Doc. 93-30706 Filed 12-15-93; 8:45 am]

BILLING CODE 4910-14-M

FEDERAL COMMUNICATIONS COMMISSION

47 CFR Parts 64 and 69

[CC Docket No. 91-115; FCC 93-535]

Tariffing Requirements for Billing Name and Address

AGENCY: Federal Communications Commission.

ACTION: Final rule; petition for reconsideration.

SUMMARY: On December 6, 1993, the Commission adopted a Second Order on Reconsideration refusing to modify its

basic finding that provision of billing name and address information is a service subject to Title II of the Communications Act of 1934, and so must be provided under tariff. But it did modify certain rules protecting end user privacy when local exchange carriers provide billing name and address information under tariff. Nineteen parties filed petitions for reconsideration of the rules adopted in the Second Report and Order in this docket, arguing that restrictions on the availability and usage of billing name and address information unduly limit legitimate business activities of local telephone companies and their access service customers. The petitioners also argued that prohibiting release of billing name and address information of unlisted or nonpublished end users unless those end users authorize such disclosure could result in unnecessary customer confusion. The Second Order on Reconsideration permits billing name and address to be disclosed on a bulk basis, but adopts new rules to ensure that this information is not used for marketing purposes. The Order also permits local telephone companies to assume that end users consent to disclosure of billing name and address information unless they withhold consent. Finally, the Order adopts a new rule to allocate costs to the billing name and address rate element.

EFFECTIVE DATE: January 18, 1994.

FOR FURTHER INFORMATION CONTACT: Steven Spaeth, Tariff Division, Common Carrier Bureau, (202) 632-6917.

SUPPLEMENTARY INFORMATION: This is a summary of the Commission's Second Order on Reconsideration adopted December 6, 1993, and released December 7, 1993. The full text of this Commission decision is available for inspection and copying during normal business hours in the FCC Public Reference Room (room 230), 1919 M St., NW., Washington, DC. The complete text of this decision may also be purchased from the Commission's copy contractor, International Transcription Service, Suite 140, 2100 M Street, NW., Washington, DC 20037.

Regulatory Flexibility Analysis

The Commission has determined that section 605(b) of the Regulatory Flexibility Act of 1980, 5 U.S.C. 605(b), does not apply to these rules because they do not have a significant economic impact on a substantial number of small entities. The definition of a "small entity" in section 3 of the Small Business Act excludes any business that is dominant in its field of operation. Although some of the local exchange carriers that will be affected are very small, local exchange carriers do not qualify as small entities because each of them has a monopoly on ubiquitous access to the subscribers in their service area. The Commission has also found all exchange carriers to be dominant in its competitive carrier proceeding. See 85 FCC 2d 1, 23–24 (1980). To the extent that small telephone companies will be affected by these rules, the Commission hereby certifies that these rules will not have a significant effect on a substantial number of "small entities."

Summary of Report and Order

In the Second Report and Order in this Docket, the Commission required local exchange carriers (LECs) to provide their customers' billing name and address (BNA) information to interexchange carriers and other telecommunications service providers on a common carrier basis. Because widespread disclosure of BNA information could conflict with customers' reasonable expectations of privacy, the Commission also limited BNA disclosure, thus safeguarding these expectations. Nineteen parties filed petitions for reconsideration of the Second Report and Order, many contending that the Commission erred in requiring LECs to file tariffs for BNA service. The petitioners also argued that some of the privacy protections might interfere with established business practices, or might conflict with the interests of end users. The Commission refused to modify its basic finding that BNA provision must be provided under tariff, but it did modify the rules protecting end user privacy.

Local exchange carriers were not permitted to release BNA information on a "bulk" basis, *i.e.*, were not permitted to disclose all the BNA in their records. In addition, parties obtaining BNA information were not permitted to use it for any purpose other than billing and collection. Petitioners claim that the restrictions against bulk BNA disclosure and BNA usage precludes reasonable BNA uses, such as confirmation of service orders, or preventing fraud by customers who attempt to avoid paying a bill by switching to another interexchange carrier. The Second Order on Reconsideration lifts the prohibition against bulk disclosure. To maintain privacy protections, however, the Second Order on Reconsideration permits BNA information to be used only for the following purposes: (1) Billing customers, (2) any purpose associated with the "equal access" requirement of United States v. AT&T, 552 F.Supp. 131 (D.D.C. 1982), or (3) verification of service orders of new customers, identification of customers who have moved to a new address, fraud prevention, and similar nonmarketing purposes. The Second Order on Reconsideration expressly forbids BNA information to be used for marketing purposes.

The Second Report and Order also required LECs to obtain a one-time written authorization for BNA disclosure from existing and future LEC cardholders having unpublished or unlisted numbers. With respect to third party and collect calls, customers are given an opportunity to accept or reject charges to their line accounts prior to the completion of those calls, and no BNA is released if the subscriber refuses the call. The Commission determined that the opportunity to refuse a call is sufficient to protect from unwanted disclosure the BNA of end users with unpublished or unlisted numbers. Finally, the Commission concluded that the line information database (LIDB), which maintains information on the credit status of calling cards, should be modified to notify telecommunications service providers that certain end users do not permit their BNA information to be released for billing purposes.

The petitioners expect few customers to respond to requests for BNA authorization, argue that the modification to LIDB would result in disabling the calling cards of end users who do not authorize BNA disclosure, and assert that these customers will be surprised and confused by this result. Petitioners also argue that the Commission should consider a subscriber's use of a calling card as implicit authorization for BNA disclosure, just as the Commission considers accepting a third party or collect call as implicit authorization. The Second Order on Reconsideration revises the written authorization requirement so that LECs may assume that end users do not oppose BNA disclosure unless they affirmatively withhold authorization. The Second Order on Reconsideration also agrees that calling card calls should not be treated differently from third party and collect calls, and enables end users to withhold consent for BNA disclosure for third party and collect calls as well as calling card calls. In addition, the Order reschedules the date on which LECs are required to file tariffs for the provision of BNA of unlisted and nonpublished subscribers, from February 9 to February 23, 1994.

Finally, one petitioner argued that the cost allocation rules adopted in the Second Report and Order do not allocate all the appropriate costs in the

BNA information rate element established in that Order. Therefore, in the Second Order on Reconsideration, the Commission revised Section 47 CFR 69.407 to allocate more costs to the BNA rate element.

Ordering Clauses

Accordingly, *It is ordered* That the petitions for reconsideration filed by the parties listed in Appendix A of this Order are granted to the extent indicated above, and otherwise are denied.

It is further ordered That pursuant to authority contained in sections 1, 4, and 201–205 of the Communications Act of 1934, as amended, 47 U.S.C. 151, 154, and 201–205, parts 64 and 69 of the Commission's Rules, 47 CFR parts 64, 69, are amended as set forth below.

It is further ordered, Pursuant to section 405 of the Communications Act of 1934, as amended, 47 U.S.C. 405, that In the Matter of Policies and Rules Concerning Local Exchange Carrier Validation and Billing Information for Joint Use Calling Cards, CC Docket No. 91–115, Second Report and Order, 8 FCC Rcd 4478 (1993) is modified to reflect the revisions to the deadlines established in paragraphs 45 and 46 of that Order, as specified above.[1]

It is further ordered That the policies, rules and requirements set forth herein are adopted.

It is further ordered That the provisions in this Second Order on Reconsideration will be effective January 18, 1994.

It is further ordered That the petition for waiver of the BNA Order filed by Pacific Bell and Nevada Bell is denied.

It is further ordered That the petition for waiver of the BNA Order filed by GTE Service Corporation is denied.

List of Subjects

47 CFR Part 64

Communications common carriers, Miscellaneous rules relating to common carriers.

47 CFR Part 69

Communications common carriers, Access charges.

Rules

Amendments to the Code of Federal Regulations

Title 47 of the CFR, parts 64 and 69 are amended as follows:

PART 64—MISCELLANEOUS RULES RELATING TO COMMON CARRIERS

1. The authority citation for part 64 continues to read as follows:

Authority: Sec. 4, 48 Stat. 1066, as amended; 47 U.S.C. 154, unless otherwise noted.

2. Section 64.1201 is amended by revising paragraph (a)(2), redesignating paragraph (c) as paragraph (c)(1) and revising it, adding new paragraph (c)(2), removing and reserving paragraph (d), and revising paragraphs (e)(2) and (e)(3) to read as follows:

§ 64.1201 Restrictions on billing name and address disclosure.

(a) * * *

(2) The term "telecommunications service provider" means interexchange carriers, operator service providers, enhanced service providers, and any other provider of interstate telecommunications services.

* * * * *

(c)(1) No telecommunications service provider or authorized billing and collection agent of a telecommunications service provider shall use billing name and address information for any purpose other than the following:

(i) Billing customers for using telecommunications services of that service provider and collecting amounts due;

(ii) Any purpose associated with the "equal access" requirement of United States v. AT&T 552 F.Supp. 131 (D.D.C. 1982); and

(iii) Verification of service orders of new customers, identification of customers who have moved to a new address, fraud prevention, and similar nonmarketing purposes.

(2) In no case shall any telecommunications service provider or authorized billing and collection agent of a telecommunications service provider disclose the billing name and address information of any subscriber to any third party, except that a telecommunications service provider may disclose billing name and address information to its authorized billing and collection agent.

(d) [reserved]

(e) * * *

(2) In addition to the notification specified in paragraph (e)(1) of this section, all local exchange carriers providing billing name and address information shall notify their subscribers with unlisted or nonpublished telephone numbers that:

(i) Customers have a right to request that their BNA not be disclosed, and that customers may prevent BNA disclosure for third party and collect calls as well as calling card calls;

(ii) LECs will presume that unlisted and nonpublished end users consent to disclosure and use of their BNA if customers do not affirmatively request that their BNA not be disclosed; and

(iii) The presumption in favor of consent for disclosure will begin 30 days after customers receive notice.

(3) No local exchange carrier shall disclose the billing name and address information associated with any subscriber who has affirmatively withheld consent for disclosure of BNA information.

PART 69—ACCESS CHARGES

3. The authority citation for part 69 continues to read as follows:

Authority: Sec. 4, 48 Stat. 1066, as amended; 47 U.S.C. 154.

4. Section 69.407 is amended by redesignating paragraph (c) as paragraph (d), and adding new paragraph (c) to read as follows:

§ 69.407 Revenue accounting expenses in Account 6620.

* * * * *

(c) Revenue Accounting Expenses allocated to the interstate jurisdiction that are attributable to the provision of billing name and address information shall be assigned to the Billing Name and Address element.

* * * * *

Federal Communications Commission.

William F. Caton,

Acting Secretary.

[FR Doc. 93–30607 Filed 12–15–93; 8:45 am]

BILLING CODE 6712-01-M

---

47 CFR Part 73

[MM Docket No. 91–339; RM–7857, RM–7901, RM–7921]

Radio Broadcasting Services; Alfred, Campbell and Waverly, NY

AGENCY: Federal Communications Commission.

ACTION: Final rule.

SUMMARY: The Commission, at the request of WATS Broadcasting, Incorporated, substitutes Channel 271A for Channel 272A at Waverly, New York, and modifies the license of Station WAVR to specify operation on the alternate Class A channel. See 56 FR 60956, November 29, 1991. At the request of Pembrook Pines Elmira Ltd. and PMJ Communications, Inc., Channel 270A is allotted to Alfred, New York, as the community's first local commercial FM transmission service. Channel 270A can be allotted to Alfred without the imposition of a site restriction at coordinates North Latitude 42–15–30 and West Longitude 77–47–30. Channel 271A can be allotted to Waverly at the

[1] See 5 U.S.C. 553(d)(1).

site specified in Station WAVR's license, at coordinates 42–03–48; 76–31–28. Canadian concurrence in these proposals has been received since the communities are located within 320 kilometers (200 miles) of the U.S.-Canadian border. The request of Markey Broadcasting Company to allot Channel 270A to Campbell, New York, as the community's first local aural transmission service is denied. With this action, this proceeding is terminated.

DATES: Effective January 27, 1994. The window period for filing applications for Channel 270A at Alfred, New York, will open on January 28, 1994, and close on February 28, 1994.

FOR FURTHER INFORMATION CONTACT: Leslie K. Shapiro, Mass Media Bureau, (202) 634–6530.

SUPPLEMENTARY INFORMATION: This is a synopsis of the Commission's Report and Order, MM Docket No. 91–339, adopted December 1, 1993, and released December 13, 1993. The full text of this Commission decision is available for inspection and copying during normal business hours in the FCC Reference Center (room 239), 1919 M Street, NW., Washington, DC. The complete text of this decision may also be purchased from the Commission's copy contractor, International Transcription Service, Inc., (202) 857–3800, 2100 M Street, NW., suite 140, Washington, DC 20037.

List of Subjects in 47 CFR Part 73

Radio broadcasting.

47 CFR PART 73—[AMENDED]

1. The authority citation for part 73 continues to read as follows:

Authority: 47 U.S.C. 154, 303.

§ 73.202 [Amended]

2. Section 73.202(b), the Table of FM Allotments under New York, is amended by adding Alfred, Channel 270A, and by removing Channel 272A and adding Channel 271A at Waverly.

Federal Communications Commission.

John A. Karousos,

Acting Chief, Allocations Branch, Policy and Rules Division, Mass Media Bureau.

[FR Doc. 93–30686 Filed 12–15–93; 8:45 am]

BILLING CODE 6712–01–M

---

47 CFR Part 73

[MM Docket No. 93–220; RM–8293]

Radio Broadcasting Services; Houston, AK

AGENCY: Federal Communications Commission.

ACTION: Final rule.

SUMMARY: This document allots Channel 221A to Houston, Alaska, as that community's second local FM service, in response to a petition for rule making filed on behalf of Evangelistic Alaska Missionary Fellowship, Inc. See 58 FR 42521, August 10, 1993. Coordinates used for Channel 221A at Houston are 61–38–01 and 149–50–28. With this action, the proceeding is terminated.

DATES: Effective January 27, 1994. The window period for filing applications on Channel 221A at Houston, Alaska, will open on January 28, 1994, and close on February 28, 1994.

FOR FURTHER INFORMATION CONTACT: Nancy Joyner, Mass Media Bureau, (202) 634–6530. Questions related to the window application filing process for Channel 221A at Houston, Alaska, should be addressed to the FM Branch, Audio Services Division, Mass Media Bureau, (202) 632–0394.

SUPPLEMENTARY INFORMATION: This is a synopsis of the Commission's Report and Order, MM Docket No. 93–220, adopted November 17, 1993, and released December 13, 1993. The full text of this Commission decision is available for inspection and copying during normal business hours in the FCC's Reference Center (room 239), 1919 M Street, NW., Washington, DC. The complete text of this decision may also be purchased from the Commission's copy contractors, International Transcription Service, Inc., (202) 857–3800, 2100 M Street, NW., suite 140, Washington, DC 20037.

List of Subjects in 47 CFR Part 73

Radio broadcasting.

Part 73 of title 47 of the Code of Federal Regulations is amended as follows:

47 CFR PART 73—[AMENDED]

1. The authority citation for part 73 continues to read as follows:

Authority: 47 U.S.C. 154, 303.

§ 73.202 [Amended]

2. Section 73.202(b), the Table of FM Allotments under Alaska, is amended by adding Channel 221A at Houston.

Federal Communications Commission.

John A. Karousos,

Acting Chief, Allocations Branch, Policy and Rules Division, Mass Media Bureau.

[FR Doc. 93–30687 Filed 12–15–93; 8:45 am]

BILLING CODE 6712–01–M

---

47 CFR Part 73

[MM Docket No. 93–196; RM–8275]

Radio Broadcasting Services; Point Arena, CA

AGENCY: Federal Communications Commission.

ACTION: Final rule.

SUMMARY: This document allots FM Channel 272B1 to Point Arena, California, as that community's first local aural transmission service, in response to a petition for rule making filed on behalf of Del Mar Trust. See 58 FR 39494, July 23, 1993. Coordinates used for Channel 272B1 at Point Arena are 38–54–42 and 123–41–24. With this action, the proceeding is terminated.

DATES: Effective January 27, 1994. The window period for filing applications on Channel 272B1 at Point Arena, California, will open on January 28, 1994, and close on February 28, 1994.

FOR FURTHER INFORMATION CONTACT: Nancy Joyner, Mass Media Bureau, (202) 634–6530. Questions related to the application filing process for Channel 272B1 at Point Arena, California, should be addressed to the Audio Services Division, FM Branch, Mass Media Bureau, (202) 634–6530.

SUPPLEMENTARY INFORMATION: This is a synopsis of the Commission's Report and Order, MM Docket No. 93–196, adopted November 17, 1993, and released December 13, 1993. The full text of this Commission decision is available for inspection and copying during normal business hours in the FCC's Reference Center (room 239), 1919 M Street, NW., Washington, DC. The complete text of this decision may also be purchased from the Commission's copy contractors, International Transcription Service, Inc., (202) 857–3800, located at 1919 M Street, NW., room 246, or 2100 M Street, NW., suite 140, Washington, DC 20037.

List of Subjects in 47 CFR Part 73

Radio broadcasting.

Part 73 of title 47 of the Code of Federal Regulations is amended as follows:

47 CFR PART 73—[AMENDED]

1. The authority citation for part 73 continues to read as follows:

Authority: 47 U.S.C. 154, 303.

§ 73.202 [Amended]

2. Section 73.202(b), the FM Table of Allotments under California, is amended by adding Point Arena, Channel 272B1.

Federal Communications Commission.

John A. Karousos,

Acting Chief, Allocations Branch, Policy and Rules Division, Mass Media Bureau.

[FR Doc. 93-30688 Filed 12-15-93; 8:45 am]

BILLING CODE 6712-01-M

47 CFR Part 73

[MM Docket No. 92-175; RM-8034]

Radio Broadcasting Services; Pawley's Island and Atlantic Beach, SC

AGENCY: Federal Communications Commission.

ACTION: Final rule.

SUMMARY: The Commission, at the request of Audrey R. Morris, reallocates Channel 262A from Pawley's Island to Atlantic Beach, South Carolina, and modifies Station WPAW's construction permit to specify Atlantic Beach as its community of license. See 57 FR 38292, August 24, 1992. Channel 262A can be allotted to Atlantic Beach in compliance with the Commission's minimum distance separation requirements without the imposition of a site restriction, at coordinates North Latitude 33-48-09 and West Longitude 78-43-00. With this action, this proceeding is terminated.

EFFECTIVE DATE: January 27, 1994.

FOR FURTHER INFORMATION CONTACT: Leslie K. Shapiro, Mass Media Bureau, (202) 634-6530.

SUPPLEMENTARY INFORMATION: This is a synopsis of the Commission's Report and Order, MM Docket No. 92-175, adopted November 10, 1993, and released December 13, 1993. The full text of this Commission decision is available for inspection and copying during normal business hours in the FCC Reference Center (room 239), 1919 M Street, NW., Washington, DC. The complete text of this decision may also be purchased from the Commission's copy contractor, International Transcription Service, Inc., (202) 857-3800, 2100 M Street, NW., suite 140, Washington, DC 20037.

List of Subjects in 47 CFR Part 73

Radio broadcasting.

Part 73 of title of the Code of Federal Regulations is amended as follows:

47 CFR PART 73—[AMENDED]

1. The authority citation for part 73 continues to read as follows:

Authority: 47 U.S.C. 154, 303.

§ 73.202 [Amended]

2. Section 73.202(b), the Table of FM Allotments under South Carolina, is amended by adding Atlantic Beach, Channel 262A and removing Channel 262A at Pawley's Island.

Federal Communications Commission.

Victoria M. McCauley,

Assistant Chief, Allocations Branch, Policy And Rules Division, Mass Media Bureau.

[FR Doc. 93-30690 Filed 12-15-93; 8:45 am]

BILLING CODE 6712-01-M

47 CFR Part 73

[MM Docket No. 93-100; RM-8175]

Radio Broadcasting Services; Cleveland and Ebenezer, MS

AGENCY: Federal Communications Commission.

ACTION: Final rule.

SUMMARY: This document substitutes Channel 280C3 for Channel 280A at Cleveland, Mississippi, and modifies the license for Station WCLD-FM to specify operation on Channel 280C3 in response to a petition filed jointly by Radio Cleveland, Inc. and JimBar Enterprises. See 58 FR 25592, April 27, 1993. The coordinates for Channel 280C3 are 33-43-59 and 90-41-38. To accommodate the substitution at Cleveland we shall delete vacant channel 280A at Ebenezer, Mississippi. With this action, this proceeding is terminated.

EFFECTIVE DATE: January 27, 1994.

FOR FURTHER INFORMATION CONTACT: Kathleen Scheuerle, Mass Media Bureau, (202) 634-6530.

SUPPLEMENTARY INFORMATION: This is a summary of the Commission's Report and Order, MM Docket No. 93-100, adopted November 10, 1993, and released December 13, 1993. The full text of this Commission decision is available for inspection and copying during normal business hours in the Commission's Reference Center (room 239), 1919 M Street, NW., Washington, DC. The complete text of this decision may also be purchased from the Commission's copy contractors, International Transcription Services, Inc., 2100 M Street, NW., suite 140, Washington, DC 20037, (202) 857-3800.

List of Subjects in 47 CFR Part 73

Radio broadcasting.

Part 73 of title 47 of the Code of Federal Regulations is amended as follows:

47 CFR PART 73—[AMENDED]

1. The authority citation for part 73 continues to read as follows:

Authority: 47 U.S.C. 154, 303.

§ 73.202 [Amended]

2. Section 73.202(b), the Table of FM Allotments under Mississippi, is amended by removing Channel 280A and adding Channel 280C3 at Cleveland and by removing Ebenezer, Channel 280A.

Federal Communications Commission.

Victoria M. McCauley,

Assistant Chief, Allocations Branch, Policy and Rules Division, Mass Media Bureau.

[FR Doc. 93-30692 12-15-93; 8:45 am]

BILLING CODE 6712-01-M

DEPARTMENT OF TRANSPORTATION

National Highway Traffic Safety Administration

49 CFR Part 571

[Docket No. 87-6; Notice 6]

RIN 2127-AF06

Federal Motor Vehicle Safety Standards Lamps, Reflective Devices, and Associated Equipment

AGENCY: National Highway Traffic Safety Administration (NHTSA), DOT.

ACTION: Final rule; response to petition for reconsideration.

SUMMARY: This notice responds to a petition for reconsideration by Ford Motor Company of the final rule published on January 11, 1993, which amended Federal Motor Vehicle Safety Standard No. 108 to allow daytime running lamps (DRLs) as an item of optional motor vehicle lighting equipment. In response to a request by General Motors the notice clarifies, with an amendment, that a lower beam headlamp DRL that is closer than 100 mm to a turn signal lamp need not be extinguished when the turn signal is operating. Similarly, an amendment is effected permitting spacing closer than 100 mm between a turn signal and a DRL other than a lower beam headlamp, provided that the DRL's candela does not exceed 2600 and the turn signal meets the requirements of S5.3.1.7. This responds in part to a comment by Ford. Ford's request for reconsideration of the mounting height requirement for high intensity DRLs is denied. In response to Ford's complaint that it has no opportunity to comment on the restriction against using a higher intensity turn signal lamp when high intensity DRLs optically combined with headlamps are closer to each other than 100 mm, NHTSA is granting Ford's petition on procedural grounds and is allowing this optional lighting combination until October 1, 1995,

pending further evaluation of relevant data upon which the restriction was originally based.

DATES: Effective date of the final rule is January 18, 1994.

FOR FURTHER INFORMATION CONTACT: Jere Medlin, Office of Rulemaking, NHTSA, Washington, DC [202–366–5276].

SUPPLEMENTARY INFORMATION: On January 11, 1993, NHTSA published a final rule intended to facilitate the introduction of daytime running lamps (DRLs) as an item of optional motor vehicle lighting equipment (58 FR 3500). The reader is referred to that notice, and to previous notices for a full discussion of this topic (52 FR 8316, 53 FR 23673, 53 FR 40921, and 56 FR 38104). A petition for reconsideration of the final rule was submitted by Ford Motor Company (Ford). General Motors Corporation (GM) asked for a clarification of lower beam headlamp use as a DRL.

Introductory Remarks

Since 1989, Canada has required that motor vehicles be equipped with DRLs. In implementation of the grant of a petition submitted by GM, NHTSA amended Standard No. 108, effective February 10, 1993, to allow DRLs as a manufacturer option. However, because of concerns over possible masking of turn signal lamps by DRLs and of possible glare, NHTSA adopted limitations on lamp intensity and lamp height in its final rule that do not exist in the Canadian rule. In NHTSA's view, its final rule represented a supportable compromise between Canada's requirements and possible masking and glare problems. Nevertheless, there is not full congruity between the standards of the two nations. Ford's petition for reconsideration highlights these differences which will be discussed later in the notice.

The issue of concern to GM was:

Issue #1: When a Lower Beam Headlamp is Used as a DRL and the Turn Signal Lamp is Closer Than 100 mm, the Turn Signal Multiplier of S5.3.1.7 Ought to be Allowed as an Alternative to Extinguishing the DRL When the Turn Signal is Used.

One effect of paragraph S5.5.11(a), adopted on January 11, 1993, is to permit a lower beam headlamp to be wired as a DRL subject to several provisos. One of these provisos is that the DRL:

> (4) If not optically combined with a turn signal lamp, is located so that the distance from the edge of the illuminated surface of its lens to the optical axis (filament center) of the nearest turn signal lamp is not less than 100 mm, * * * unless it is deactivated when the turn signal lamp is activated;

GM interprets subparagraph (4) as prohibiting a lower beam DRL from being within 100 mm of a turn signal lamp, unless the DRL is extinguished when the turn signal is activated. GM believes that compliance with the turn signal multiplier provisions of paragraph S5.3.1.7, which apply to normal use of a lower beam headlamp, should be allowed as an alternative to extinguishing the DRL. Paragraph S5.3.1.7 states:

> On a motor vehicle on which the front turn signal lamp is less than 100 mm from the lighted edge of a lower beam headlamp * * * the multiplier applied to obtain the required minimum luminous intensities shall be 2.5.

To reduce the likelihood of an adjacent headlamp from masking the turn signal, the turn signal's intensity prescribed by Standard No. 108 must be "multiplied" by 2.5 and the product becomes the new intensity requirement. This is required when the turn signal lamp and the lower beam headlamp are less than 100 mm apart. GM believes that the final rule is unclear whether S5.3.1.7 will allow close lamp spacing on a motor vehicle when a lower beam headlamp has an alternative use as a DRL. GM recommends that this inconsistency be cured by adding at the end of subparagraph (4) the additional exception "or unless the DRL is optically combined with the lower beam headlamp, and the turn signal lamp meets the requirements of S5.3.1.7."

The agency has examined how the final rule treats lower beam headlamps. Paragraph S5.5.11(a)(1)(i) excepts from the luminous intensity range of subparagraph (1) "(a) lower beam headlamp intended to operate as a DRL at full voltage, or at a voltage lower than used to operate it as a lower beam headlamp." Under this exception, a lower beam headlamp in its DRL mode may be no brighter than that lower beam headlamp in its lower beam headlamp mode. Since use of the multiplier is as valid for a lower beam acting as a DRL as it is for a lower beam acting as a lower beam (because the lower beam acting as a DRL is no brighter than the lower beam acting as a lower beam), the agency recognizes the inconsistency brought to its attention by GM, and is amending subparagraph (4) in the manner suggested by GM.

The following issues were of concern to Ford.

Issue #2: The Final Rule Does Not Allow The Turn Signal Multiplier if the Turn Signal Lamp is Less Than 100 mm From a DRL That is Other Than a Lower Beam Headlamp.

Ford noted that the final rule does not allow a turn signal lamp meeting the multiplier of S5.3.1.7 if the turn signal lamp is less than 100 mm from a DRL that is other than a lower beam headlamp, as was proposed in the NPRM for DRLs whose maximum intensity was 2,600 candela (cd). Ford is correct. NHTSA chose not to allow an exception, regardless of candela output, because it believes that the multiplier may not prevent turn signal masking for DRLs that are more intense than 2,600 cd. However, there is no reason that the compliance with the multiplier may not be allowed as the basis for permitting a distance of less than 100 mm between the turn signal and a DRL other than a lower beam headlamp where the DRL intensity is 2,600 cd or less, as originally proposed, and, in recognition of Ford's comment, NHTSA is amending the rule to reflect its original proposal.

Issue #3: NHTSA failed to provide notice for high intensity DRL to turn signal spacing and DRL height requirements.

Ford petitioned for reconsideration of S5.5.11(a)(4) relating to DRL spacing, and S5.5.11(a)(1)(ii) relating to DRL height, on the basis of its belief that NHTSA failed to provide notice and opportunity to comment on those provisions.

NHTSA disagrees that it has failed to provide adequate notice for high intensity DRL height requirements. However, it has considered Ford's arguments relating to DRL spacing and is granting Ford's petition, for the reasons discussed below.

With respect to the mounting height of DRLs, the final rule amended Standard No. 108 to add S5.5.11(a)(1)(ii) which allows as a DRL:

> (ii) an upper beam headlamp intended to operate as a DRL, whose lower intensity at test point H–V is not more than 7,000 candela, and which is mounted not higher than 864 mm above the road surface * * *.

There was no antecedent for this provision in the NPRM. Ford has objected to the effect of the height restriction on its products. The height restriction is related to maximum candela. NHTSA's proposed 2,600 cd limit was based upon the conclusion of a 1989 DOT technical report that rear view mirror glare at 2,600 cd is sufficiently high that it creates a 50 percent probability that the driver of the vehicle immediately preceding will be distracted from the driving task and react by adjusting the mirror to eliminate the glare, an action that lowers its safety value. In their

comments on the NPRM, manufacturers objected to the 2,600 cd limitation. Ford specifically questioned the research leading to that value. Manufacturers urged NHTSA to adopt a maximum of 7,000 cd at test point H–V, a value espoused by both Canada and the SAE.

In response, NHTSA adopted S5.5.11(a)(1) (i) and (ii) establishing a DRL-intensity range of up to 3,000 cd but allowing an upper beam headlamp DRL of up to 7,000 cd if it is not mounted higher than 864 mm (34 inches) from the road surface. The figure of 864 mm was derived from calculations that NHTSA made between the NPRM and final rule which indicated that the driver of a small car would not be exposed to an intensity greater than 2,600 cd unless the mounting height of the DRL of the vehicle behind exceeded 34 inches (58 FR at 3503). Addressing the issue of an appropriate maximum value for DRLs mounted higher than 34 inches, the agency observed in the preamble to the final rule (58 FR at 3503 and 3504) that it had chosen 3,000 cd as an appropriate limit because manufacturers had commented that 2,600 cd was not practicable.

Ford objected in its petition, saying that it had not had the opportunity "to evaluate the amount of additional glare, if any, produced by DRLs mounted from 2 mm to 250 mm above the 864 mm limited on many of its truck and utility vehicles." Ford argued that "(f)ew, if any of these vehicles would comply with the 3,000 candela maximum specified in S5.5.11(a)(1)". However, under the proposal, a DRL could not have an intensity greater than 2,600 cd regardless of its mounting height. Under the final rule, a DRL mounted up to 34 inches may have a maximum intensity of 7,000 cd and up to 3,000 cd if mounted higher. NHTSA concludes that adequate notice was given in this instance, and that further notice refining the details of the NPRM by providing exceptions to the proposed restrictions was not required under the Administrative Procedure Act.

For the reasons expressed above, the agency has found no merit in Ford's petition for reconsideration of this point, and its petition is denied.

Ford also petitioned for reconsideration of S5.5.11(a)(4) relating to DRL spacing on the basis that NHTSA failed to provide notice. As proposed, S5.5.11(a)(4) read as follows:

(4) (A DRL) is located so that the distance from the edge of the illuminated surface of its lens to the optical axis (filament center) of the turn signal lamp is not less than 4 inches (100 mm), unless the lamp is deactivated when the turn signal lamp is activated or unless the turn signal lamp conforms to paragraph S5.3.1.7 of this standard.

A turn signal lamp conforming to S5.3.1.7 is one whose intensity is increased by a 2.5 multiplier. The purpose of the requirement is to ensure that the turn signal is bright enough not to be masked by the light from an adjacent lower beam headlamp. However, as written in the final rule, paragraph S5.11.1(a)(4) read:

(4) (A DRL) is located so that the distance from the edge of the illuminated surface of its lens to the optical axis (filament center) of the nearest turn signal lamp is not less than 100 mm, unless its luminous intensity as a DRL is not more than 2,600 candela at any location in the beam, or unless it is deactivated when the turn signal lamp is activated;

The proposal would have applied the spacing exceptions to all DRLs, while the final rule applies the spacing exceptions to a DRL only if its beam intensity does not exceed 2,600 cd or if the DRL is deactivated when the turn signal lamp is activated. Ford complained that the final rule does not contain any "provision * * * to provide increased intensity turn signal lamps as an alternative to deactivating DRL's," and that "(t)here was no opportunity for comment upon the agency's test methodology and conclusions, upon which the subparagraph (a) 2,600 candela maximum is based." It argued that "Ford had no opportunity to comment on the withdrawal of that provision." Ford has observed that materials the agency considered relevant in adopting the restriction (informal observations by agency personnel of turn signal masking by DRLs on actual vehicles at 300 feet) were placed in the public docket after the issuance of the NPRM, referring to NHTSA's "unpublished demonstration". As a result of the alleged failure to give notice, Ford said that the final rule "will disallow the designs on most DRL systems on vehicles presently manufactured by Ford for sale in Canada."

Explaining its decision in the final rule not to adopt the proposed provision, NHTSA stated (58 FR 3504) that it had conducted its own demonstration using 9 members of its staff, and concluded that the demonstration "suggests that spacing is effective, and that an increase in turn signal brightness does not compensate for inadequate spacing." In the agency's view, "[t]he alternative of brighter (500 candela) turn signals does not resolve the issue". However, as Ford notes, this material was placed in the docket subsequent to the NPRM and neither Ford nor any other person was offered the opportunity to comment upon it.

Based upon this procedural objection, NHTSA has decided to grant Ford's petition, but only to the extent of a temporary lifting of the restriction, until October 1, 1995. This will allow Ford to offer Canadian-type DRLs on its 1994 and 1995 model year vehicle lines. Even before its decision to grant Ford's petition in part, NHTSA had planned to conduct formal research on turn signal masking and DRLs. This formal research will be conducted by the agency's Office of Research and Development and is intended to supplement NHTSA's original informal research. The results are due before the end of 1994. If the results indicate that a permanent lifting of the restriction would not compromise safety, NHTSA will initiate appropriate regulatory action to accomplish this. If, on the other hand, the results support the suggestion of the informal research that high intensity DRLs may create a masking problem, no further regulatory action is required as the lifting of the restriction is self-terminating as of October 1, 1995.

As published in the final rule, the two exceptions were contained in paragraph S5.5.11.(a)(4). The amendments that are adopted under this notice set forth the exceptions in four subparagraphs. With reference to the discussion about the temporary lifting of the spacing restriction immediately above, new subparagraph (ii) adds the exception that the turn signal multiplier may be used when candela in an upper beam type DRL is higher than 2600 on any vehicle that is manufactured before October 1, 1995.

Effective Date

Since the final rule relieves restrictions and imposes no additional burden on any person, the agency finds that an effective date earlier than 180 days after issuance is in the public interest, and the final is effective January 18, 1994.

Rulemaking Analyses

Executive Order 12866 and DOT Regulatory Policies and Procedures

NHTSA has considered the impacts of this rulemaking action under E.O. 12866 and the Department of Transportation regulatory policies and procedures. This action has been determined to be not "significant" under either. The agency has determined further that the economic effects of the amendment are so minimal that a full regulatory evaluation is not required. The rule does not impose requirements upon persons otherwise regulated by Standard No.

108. It relieves, for a period of time, a restriction under which manufacturers might otherwise have been unable to offer DRLs. There is no cost impact upon any manufacturer who does not choose to offer a DRL. Because DRL's are not required, any cost from implementing them will be at the manufacturer's choice. There may be a small incremental cost increase over some standard Canadian DRL models for the purpose of limiting possibly negative safety effects, but NHTSA has not quantified these costs since DRL's are not required. Therefore, preparation of a full regulatory evaluation is not warranted.

National Environmental Policy Act

NHTSA has analyzed this rule for the purposes of the National Environmental Policy Act. It will not have a significant effect upon the environment because there is no requirement that a manufacturer provide DRLs. As noted in previous rulemakings associated with this rule, there could be a fuel economy penalty of up to one quarter mile per gallon, depending on the type of DRL.

Regulatory Flexibility Act

The agency has also considered the impacts of this rule in relation to the Regulatory Flexibility Act. I certify that this rule will not have a significant economic impact upon a substantial number of small entities, because its adoption will not establish a mandatory requirement on regulated persons. Further, the rule will not affect the price of vehicles purchased by small jurisdictions and organizations. Accordingly, no regulatory flexibility analysis has been prepared.

Executive Order 12612 (Federalism)

This rule has also been analyzed in accordance with the principles and criteria contained in Executive Order 12612, and NHTSA has determined that it does not have sufficient federalism implications to warrant the preparation of a Federalism Assessment.

Civil Justice Reform

This final rule does not have any retroactive effect. Under 15 U.S.C. 1392(d), whenever a Federal motor vehicle safety standard is in effect, a state may not adopt or maintain a safety standard applicable to the same aspect of performance which is not identical to the Federal standard. 15 U.S.C. 1394 sets forth a procedure for judicial review of final rules establishing, amending or revoking Federal motor vehicle safety standards. That section does not require submission of a petition for reconsideration or other administrative proceedings before parties may file suit in court.

List of Subjects in 49 CFR Part 571

Imports, Motor vehicle safety, Motor vehicles.

In consideration of the foregoing, 49 CFR part 571 is amended as follows:

1. The authority citation for part 571 continues to read as follows:

Authority: 15 U.S.C. 1392, 1401, 1403, 1407; delegation of authority at 49 CFR 1.50.

2. Section 571.108 is amended by revising paragraph S5.5.11(a)(4) to read as follows:

§ 571.108 Motor Vehicle Safety Standard No. 108, Lamps, Reflective Devices, and Associated Equipment.

* * * * *

S.5.5.11(a) * * *

(4) If not optically combined with a turn signal lamp, is located so that the distance from its lighted edge to the optical center of the nearest turn signal lamp is not less than 100 mm, unless:

(i) The luminous intensity of the DRL is not more than 2,600 candela at any location in the beam and the turn signal meets the requirements of S5.3.1.7; or

(ii) (For a passenger car, multipurpose passenger vehicle, truck, or bus that is manufactured before October 1, 1995, and which uses an upper beam headlamp as a DRL as specified in paragraph S5.5.11(a)(1)(ii)) the luminous intensity of the DRL is greater than 2,600 candela at any location in the beam and the turn signal lamp meets the requirements of S5.3.1.7; or

(iii) The DRL is optically combined with a lower beam headlamp and the turn signal lamp meets the requirements of S5.3.1.7; or

(iv) The DRL is deactivated when the turn signal or hazard warning signal lamp is activated.

* * * * *

Issued on: December 13, 1993.

Howard M. Smolkin,

Executive Director.

[FR Doc. 93-30719 Filed 12-15-93; 8:45 am]

BILLING CODE 4910-59-M

Proposed Rules

Federal Register
Vol. 58, No. 240
Thursday, December 16, 1993

This section of the FEDERAL REGISTER contains notices to the public of the proposed issuance of rules and regulations. The purpose of these notices is to give interested persons an opportunity to participate in the rule making prior to the adoption of the final rules.

DEPARTMENT OF TRANSPORTATION

Federal Highway Administration

23 CFR Part 658

[FHWA Docket No. 93-35]

RIN 2125-AD26

Truck Size and Weight; National Network

AGENCY: Federal Highway Administration (FHWA), DOT.

ACTION: Notice of proposed rulemaking; request for comments.

SUMMARY: The FHWA proposes to modify the National Network for commercial motor vehicles by adding routes in Georgia. It is the intent of this rulemaking to add 26 segments to the National Network as requested by the State of Georgia. These segments will provide for safe operation of larger commercial vehicles and for the needs of interstate commerce.

DATES: Comments on this docket must be received on or before January 31, 1994.

ADDRESSES: Submit written, signed comments to FHWA Docket No. 93-35, Federal Highway Administration, room 4232, HCC-10, Office of Chief Counsel, Federal Highway Administration, 400 Seventh Street, SW., Washington, DC 20590. All comments received will be available for examination at the above address between 8:30 a.m. and 3:30 p.m., e.t., Monday through Friday, except legal Federal holidays. Those desiring notification of receipt of comments must include a self-addressed, stamped postcard.

FOR FURTHER INFORMATION CONTACT: Mr. Thomas Klimek, Office of Motor Carrier Information Management and Analysis (202-366-2212), or Mr. David Oliver, Office of the Chief Counsel (202-366-0834), Federal Highway Administration, 400 Seventh Street, SW., Washington, DC 20590. Office hours are from 7:45 a.m. to 4:15 p.m., e.t., Monday through Friday, except legal Federal holidays.

SUPPLEMENTARY INFORMATION:

Background

The National Network of Interstate highways and federally-designated routes, on which commercial vehicles with the dimensions authorized by the Surface Transportation Assistance Act (STAA) of 1982, Public Law 97-424, 96 Stat. 2097, may operate, was established by the final rule published in the **Federal Register** on June 5, 1984 (49 FR 23302). These highways are located in each State, the District of Columbia, and Puerto Rico. Routes on the National Network are listed in appendix A of part 658. Additional routes not on the network but available for STAA vehicles are also identified at State request.

Procedures for the addition and deletion of routes are outlined in 23 CFR 658.11 and include the issuance of a notice of proposed rulemaking (NPRM) before final rulemaking. A number of revisions to the National Network have been completed or initiated by the FHWA in separate rulemaking actions.

Amendments

The State of Georgia, under authority of the Governor, requests the addition of 26 route segments to the National Network. The segments have been reviewed by State and FHWA offices for general adherence to the criteria of 23 CFR 658.9 and found to provide for the safe operation of larger commercial vehicles and for the needs of interstate commerce.

The segments requested are generally described as:

1. US 19 (GA 300) from Florida to Pelham, 27.6 miles;
2. US 27 (GA 1) from GA 53 south of Rome to US 278 in Cedartown, 12.0 miles;
3. US 27 (GA 1) from Florida to GA 38 in Bainbridge, 19.0 miles;
4. US 41 (GA 3) from GA 5 Connector to County Road 633 near Emerson, 15.2 miles;
5. US 78 (GA 10) from Stone Mountain Freeway to Monroe Bypass, 25.9 miles;
6. US 80 (GA 22) from Alabama to GA 85 in Columbus, 9.9 miles;
7. US 84 (GA 38) from Alabama to I-75, 124.4 miles;
8. US 84 (GA 38) from GA 520 in Waycross to GA 32 in Patterson, 18.1 miles;
9. US 129 (GA 11) from I-85 to I-985, 14.9 miles;
10. US 319 (GA 35) from GA 300 in Thomasville to US 82 in Tifton, 55.7 miles;
11. US 441 (GA 31) from GA 520 in Pearson to GA 135 in Douglas, 13.2 miles;
12. US 441 (GA 24) from I-20 to GA 22 in Milledgeville, 40.1 miles;
13. US 441 (GA 15 Alternate) from Athens Bypass to I-85, 21.1 miles;
14. GA 5 Connector from I-75 to US 41 (GA 3), 1.3 miles;
15. GA 6 from I-20 to GA 6 Bypass near Dallas, 13.8 miles;
16. GA 6 Bypass around Dallas, 6.0 miles;
17. GA 10 Loop (East and South Bypass) in Athens, 11.6 miles;
18. GA 61 from I-20 to GA 166 near Carrollton, 8.6 miles;
19. GA 166 from GA 61 to the end of the 4 lane divided section west of GA 1 at Carrollton, 7.8 miles;
20. GA 247 Connector from I-75 to GA 247 in Warner Robins, 8.5 miles;
21. GA 316 from GA 120 to US 29 (GA 8), 6.0 miles;
22. GA 515 from I-575 to Blairsville, 63.4 miles;
23. GA 520 from Cusseta to Dawson, 45.7 miles;
24. GA 520 from I-75 to Waycross, 74.8 miles;
25. GA 520 from I-95 to GA 25, 5.4 miles;
26. GA 25 from GA 520 to GA 25 Spur, 6.0 miles.

The FHWA proposes to add the twenty-six segments to the existing route descriptions for Georgia. We are publishing the Georgia listing in its entirety because of the extent of the revisions.

Rulemaking Analyses and Notices

All comments received before the close of business on the comment closing date indicated above will be considered and will be available for examination in the docket at the above address. Comments received after the comment closing date will be filed in the docket and will be considered to the extent practicable, but the FHWA may issue a final rule at any time after the close of the comment period. In addition to late comments, the FHWA will also continue to file in the docket relevant information that becomes available after the comment closing date, and interested persons should continue to examine the docket for new material.

Executive Order 12866 (Regulatory Planning and Review) and DOT Regulatory Policies and Procedures

The FHWA has determined that this action does not constitute a "significant regulatory action," within the meaning of E.O. 12866, nor is it considered "significant" under the regulatory policies and procedures of the DOT. It is anticipated that the economic impact of this rulemaking will be minimal. This

rulemaking proposes technical amendments to 23 CFR part 658, adding certain highway segments in accordance with statutory provisions. These segments represent a very small portion of the National Network and have a negligible impact on the prior system. Therefore, a full regulatory evaluation is not required.

Regulatory Flexibility Act

In compliance with the Regulatory Flexibility Act (5 U.S.C. 601–612), FHWA has evaluated the effects of this proposal on small entities. As stated in the preceding paragraph, this rulemaking proposes technical amendments to 23 CFR part 658, adding certain highway segments in accordance with statutory provisions. These segments represent a very small portion of the National Network and have a negligible impact on the prior system. This rulemaking would, however, allow motor carriers, including small carriers, access to highways not available to them at the present time. Based on its evaluation of this proposal, the FHWA certifies that this action would not have a significant economic impact on a substantial number of small entities.

Executive Order 12612 (Federalism Assessment)

This action has been analyzed in accordance with the principles and criteria contained in Executive Order 12612, and it has been determined that the proposed rule does not have sufficient federalism implications to warrant the preparation of a Federalism Assessment.

Executive Order 12372 (Intergovernmental Review)

Catalog of Federal Domestic Assistance Program Number 20.217, Motor Carrier Safety. The Regulations implementing Executive Order 12372 regarding intergovernmental consultation on Federal Programs and activities apply to this program.

Paperwork Reduction Act

The proposal in this document does not contain information collection requirements (44 U.S.C. 3501 *et seq.*).

National Environmental Policy Act

The agency has analyzed this action for the purpose of the National Environment Policy Act of 1969 (42 U.S.C. 4321 *et seq.*) and has determined that this action would not have any effect on the quality of the environment.

Regulation Identification Number

A regulation identification number (RIN) is assigned to each regulatory action listed in the Unified Agenda of Federal Regulations. The Regulatory Information Service center publishes the Unified Agenda in April and October of each year. The RIN contained in the heading of this document can be used to cross reference this action with the Unified Agenda.

Due to the limited scope of the NPRM, FHWA has determined that 30 days is adequate time for interested parties to comment.

List of Subjects in 23 CFR Part 658

Grants programs—transportation, Highway and roads, Motor carrier—size and weight.

Issued on: December 8, 1993.

Rodney E. Slater,

Federal Highway Administrator.

In consideration of the foregoing, the FHWA proposes to amend title 23, Code of Federal Regulations, Chapter I, part 658 as set forth below:

PART 658—TRUCK SIZE AND WEIGHT, ROUTE DESIGNATIONS—LENGTH, WIDTH AND WEIGHT LIMITATIONS

1. The authority citation for 23 CFR part 658 is revised to read as follows:

Authority: 23 U.S.C. 127 and 315; 49 U.S.C. app. 2311, 2312, and 2316; 49 CFR 1.48(b)(19) and (c)(19).

Appendix A [Amended]

2. Appendix A to part 658 is amended by revising the entry for the State of Georgia to read as follows:

Route	From	To
Georgia		
US 19	US 82 Albany	Near Pelham.
US 19	FL State Line	Pelham.
US 23/GA 365.	I–985 near Gainesville.	US 441 near Cornelia.
US 25	I–16	N. of Statesboro.
US 27	GA 53 Rome	US 278 Cedartown.
US 27	FL State Line	GA 38 Bainbridge.
US 27 Alternate GA 85.	I–185 Columbus.	Ellerslie.
US 29	US 78 W. Interchange.	US 129/441E. Interchange Athens.
US 41	I–75 W. of Morrow.	Near Barnesville.
US 41	GA 5 Connector.	County Road 633 Emerson.
US 76	I–75 Dalton	US 411 Chatsworth.
US 78–US 29	GA 138 Monroe.	US 29 W. Interchange Athens.
US 78/GA 410.	Valleybrook Rd. Scottsdale.	GA 10 Stone Mountain.
US 78/GA 10	Stone Mountain Freeway.	Monroe Bypass.
US 80/GA 22	AL State Line	GA 85 Columbus.
US 82	Dawson	I–75 Tifton.
US 82	US 84 Waycross.	I–95 Exit 6 Brunswick.
US 84/GA 38	Alabama State Line.	I–75.
US 84/GA 38	GA 520 Waycross.	GA 32 Patterson.
US 129	I–16	Gray.
US 129	GA 247 Connector Warner Robins.	I–75 Macon.
US 129/GA 11.	I–85	I–985.
US 280	Alabama State Line.	Cusseta.
US 319/GA 35.	US 19/GA 300 Thomasville.	US 82/GA 520 Tifton.
US 411–US 41.	US 27 Rome	I–75 near Emerson.
US 441/GA 31.	US 82/GA 520 Pearson.	GA 135 Douglas.
US 441/GA 24.	I–20	GA 22 Milledgeville.
US 441/GA 15 Alternate.	Athens Bypass.	I–85.
GA 2	US 27 Fort Oglethorpe.	I–75.
GA 5 Connector.	I–75	US 41.
GA 6	I–20	GA 6 Bypass near Dallas.
GA 6 Bypass	E. of Dallas	W. of Dallas.
GA 10 Loop	E. and S. Bypass in Athens.	
GA 14 Spur	US 29/ Welcome All Road.	I–85/285 S. Interchange Atlanta.
GA 21	I–95 Monteith	GA 204 Savannah.
GA 25	GA 520	GA 25 Spur.
GA 25 Spur	US 17 N. of Brunswick.	I–95 Exit 8.
GA 53	Rome	I–75 Calhoun.
GA 61	I–20	GA 166 near Carrollton.
GA 85	Fayetteville	I–75.
GA 138	I–20 Conyers	US 78 Monroe.
GA 166	GA 61	End of 4-lane section of W. GA 1 Carrollton.
GA 247C	I–75	GA 247 Warner Robins.

Route	From	To
GA 300	US 82 Albany	I–75 Near Cordele.
GA 316 (5 miles).	I–85	Near Lawrenceville.
GA 316	GA 120	US 29.
GA 400	I–285 near Atlanta.	GA 60.
GA 515	I–575	Blairsville.
GA 520/US 280.	Cusseta	Dawson.
GA 520/US 82.	I–75	Waycross.
GA 520	I–95	GA 25.

Note 1: Atlanta area—Interstate highways within the I–285 beltway are not available to through trucks with more than 6 wheels because of construction.

Note 2: Listing for US 280 from Alabama State Line to Cusseta does not add or delete mileage, but is merely a technical correction of terminal description previously listed as "Fort Benning."

[FR Doc. 93–30601 Filed 12–15–93; 8:45 am]

BILLING CODE 4910–22–P

DEPARTMENT OF THE INTERIOR

Office of Surface Mining Reclamation and Enforcement

30 CFR Part 914

Indiana Permanent Regulatory Program Amendment

AGENCY: Office of Surface Mining Reclamation and Enforcement (OSM), Interior.

ACTION: Proposed rule.

SUMMARY: OSM is announcing receipt of a proposed amendment submitted by Indiana as a modification to the State's permanent regulatory program (hereinafter referred to as the Indiana program) under the Surface Mining Control and Reclamation Act of 1977 (SMCRA). The amendment submitted consists of proposed changes to the Indiana Surface Mining Rules provisions concerning OSM Regulatory Reform I and III issues, required program amendments, and State initiatives. The primary focus of the amendments is on hydrology, impoundments, roads, support facilities, and termination of jurisdiction. The amendment is intended to resolve outstanding issues that remain present in the approved Indiana program resulting from changes to the Federal program. The amendment would also incorporate changes desired by the State that address various parts of the State rules.

This document sets forth the times and locations that the Indiana program and the proposed amendment to that program will be available for public inspection, the comment period during which interested persons may submit written comments on the proposed amendment, and the procedures that will be followed for a public hearing, if one is requested.

DATES: Written comments must be received on or before 4 p.m. on January 18, 1994; if requested, a public hearing on the proposed amendment is scheduled for 1 p.m. on January 16, 1994; and requests to present oral testimony at the hearing must be received on or before 4 p.m. on January 3, 1994.

ADDRESSES: Written comments and requests to testify at the hearing should be directed to Mr. Roger W. Calhoun, Acting Director, Indianapolis Field Office, at the address listed below. If a hearing is requested, it will be held at the same address.

Copies of the Indiana program, the amendment, a listing of any scheduled public meetings, and all written comments received in response to this notice will be available for public review at the following locations, during normal business hours, Monday through Friday, excluding holidays:

Office of Surface Mining Reclamation and Enforcement, Indianapolis Field Office, Minton-Capehart Federal Building, 575 North Pennsylvania Street, Room 301, Indianapolis, IN 46204. Telephone: (317) 226–6166.

Indiana Department of Natural Resources, 402 West Washington Street, Room 295, Indianapolis, IN 46204. Telephone: (317) 232–1547.

Each requester may receive, free of charge, one copy of the proposed amendment by contacting the OSM Indianapolis Field Office.

FOR FURTHER INFORMATION CONTACT: Mr. Roger W. Calhoun, Acting Director, Telephone (317) 226–6166; (FTS) 8–317–226–6166.

SUPPLEMENTARY INFORMATION:

I. Background on the Indiana Program

On July 29, 1982, the Indiana program was made effective by the conditional approval of the Secretary of the Interior. Information pertinent to the general background on the Indiana program, including the Secretary's findings, the disposition of comments, and a detailed explanation of the conditions of approval of the Indiana program can be found in the July 26, 1982, **Federal Register** (47 FR 32107). Subsequent actions concerning the conditions of approval and program amendments are identified at 30 CFR 914.10, 914.15, and 914.16.

II. Discussion of the Proposed Amendments

Since July 29, 1982 (the date of conditional approval of the Indiana program), a number of changes have been made to the Federal regulations concerning surface coal mining and reclamation operations. Pursuant to the Federal regulations at 30 CFR 732.17, OSM informed Indiana on May 22, 1985 (Regulatory Reform I), and on September 20, 1989 (Regulatory Reform III), that a number of Indiana regulations are less effective than or inconsistent with the revised Federal requirements.

By letter dated October 15, 1993 (Administrative Record No. IND–1300), the Indiana Department of Natural Resources (IDNR) submitted to OSM a State program amendment package consisting of revisions to 52 sections of the Indiana rules. These revisions address changes to the Indiana program that were identified in the two letters referred to above, and certain required program amendments. The State has also proposed additional changes which Indiana believes will further improve the approved State program. The primary focus of the submittal is on hydrology, impoundments, roads, support facilities, and termination of jurisdiction.

The following rulemaking actions are being proposed by Indiana:

Rule No.	Subject (intended action)
310 IAC 12–0.5–91.5	Definition of "previously mined area". (Amend)
310 IAC 12–0.5–109	Definition of "road". (Amend)
310 IAC 12–3–30	Permit applications; hydrology. (Amend)
310 IAC 12–3–32	Permit applications; ground water. (Amend)
310 IAC 12–3–33	Permit applications; surface water. (Amend)
310 IAC 12–3–34	Permit applications; alternative water supply. (Amend)
310 IAC 12–3–41	Permit applications; general requirements. (New)
310 IAC 12–3–47	Permit applications; protection of hydrologic balance. (Amend)

Rule No.	Subject (intended action)
310 IAC 12-3-49	Permit applications; ponds, impoundments, banks, dams, and embankments. (Amend)
310 IAC 12-3-55	Permit applications; transportation facilities. (Amend)
310 IAC 12-3-55.1	Permit applications; road systems. (New)
310 IAC 12-3-68	Underground permits; hydrology. (Amend)
310 IAC 12-3-70	Underground permits; ground water. (Amend)
310 IAC 12-3-71	Underground permits; surface water information. (Amend)
310 IAC 12-3-81	Underground permits; protection of hydrologic balance. (Amend)
310 IAC 12-3-83	Underground permits; ponds, impoundments, banks, dams and embankments. (Amend)
310 IAC 12-3-90.5	Underground permits; road systems. (New)
310 IAC 12-3-91	Underground mining; return of coal processing waste to abandoned underground workings. (Amend)
310 IAC 12-3-127	Permit reviews; approval for transfer, assignment, or sale of permit rights. (Amend)
310 IAC 12-5-3	Coal exploration; performance standards. (Amend)
310 IAC 12-5-17	Surface mining; water quality standards and effluent limitations. (Amend)
310 IAC 12-5-20	Surface mining; sediment control measures. (Amend)
310 IAC 12-5-21	Surface mining; siltation structures. (Amend)
310 IAC 12-5-24	Surface mining; permanent and temporary impoundments. (Amend)
310 IAC 12-5-27	Surface mining; surface and ground water monitoring. (Amend)
310 IAC 12-5-31	Hydrologic balance; diversions, impoundments, and treatment facilities. (Amend)
310 IAC 12-5-39	Disposal of excess spoil. (Amend)
310 IAC 12-5-41	Surface mining; general requirements. (Amend)
310 IAC 12-5-42	Coal processing waste banks; site inspection. (Amend)
310 IAC 12-5-43	Coal processing waste banks; water control measures. (Amend)
310 IAC 12-5-44	Coal processing waste banks; construction requirements. (Amend)
310 IAC 12-5-48	Surface mining; dams and embankments; general requirements. (Amend)
310 IAC 12-5-50	Coal processing waste; dams and embankments; design and construction. (Amend)
310 IAC 12-5-69	Surface mining; roads. (Amend)
310 IAC 12-5-69.5	Surface mining; primary roads. (New)
310 IAC 12-5-70	Other transportation facilities. (Amend)
310 IAC 12-5-83	Underground mining; water quality standards and effluent limitations. (Amend)
310 IAC 12-5-86	Underground mining; sediment control measures. (Amend)
310 IAC 12-5-87	Underground mining; siltation structures. (Amend)
310 IAC 12-5-90	Underground mining; permanent and temporary impoundments. (Amend)
310 IAC 12-5-92	Underground mining; surface and ground water monitoring. (Amend)
310 IAC 12-5-104	Underground mining; disposal of underground development waste and excess spoil. (Amend)
310 IAC 12-5-105	Underground mining; coal processing waste banks; general requirements. (Amend)
310 IAC 12-5-106	Underground mining; coal processing waste banks; site inspection. (Amend)
310 IAC 12-5-107	Underground mining; coal processing waste banks; water control measures. (Amend)
310 IAC 12-5-108	Underground mining; coal processing waste banks; construction requirements. (Amend)
310 IAC 12-5-112	Underground mining; coal processing waste; dams and embankments; general requirements. (Amend)
310 IAC 12-5-114	Underground mining; dams and embankments; design and construction. (Amend)
310 IAC 12-5-137	Underground mining; roads. (Amend)
310 IAC 12-5-137.5	Primary roads. (New)
310 IAC 12-5-144	Auger mining; additional performance standards. (Amend)
310 IAC 12-6-19	Termination of jurisdiction. (New)

The full text of the proposed program amendment submitted by Indiana is available for public inspection at the addresses listed above. The Director now seeks public comment on whether the proposed amendment is no less effective than the Federal regulations. If approved, the amendment will become part of the Indiana program.

III. Public Comment Procedures

In accordance with provisions of 30 CFR 732.17(h), OSM is now seeking comment on whether the amendment proposed by Indiana satisfies the requirements of 30 CFR 732.15 for the approval of State program amendments. If the amendment is deemed adequate, it will become part of the Indiana program.

Written Comments

Written comments should be specific, pertain only to issues proposed in this rulemaking, and include explanations in support of the commenter's recommendations. Comments received after the time indicated under **DATES** or at locations other than the Indianapolis Field Office will not necessarily be considered in the final rulemaking or included in the Administrative Record.

Public Hearing

Persons wishing to comment at the public hearing should contact the person listed under **FOR FURTHER INFORMATION CONTACT** by the close of business on January 3, 1994. If no one requests an opportunity to comment at a public hearing, the hearing will not be held.

Filing of a written statement at the time of the hearing is requested as it will greatly assist the transcriber. Submission of written statements in advance of the hearing will allow OSM officials to prepare adequate responses and appropriate questions.

The public hearing will continue on the specified date until all persons scheduled to comment have been heard. Persons in the audience who have not been scheduled to comment and who wish to do so will be heard following those scheduled. The hearing will end after all persons who desire to comment have been heard.

Public Meeting

If only one person requests an opportunity to comment at a hearing, a public meeting, rather than a public hearing, may be held. Persons wishing to meet with OSM representatives to discuss the proposed amendment may request a meeting at the Indianapolis Field Office by contracting the person listed under **FOR FURTHER INFORMATION CONTACT.** All such meetings will be open to the public and, if possible,

notices of meetings will be posted in advance at the locations listed above under ADDRESSES. A summary of the meeting will be included in the Administrative Record.

Executive Order 12866

This proposed rule is exempted from review by the Office of Management and Budget under Executive Order 12866.

Executive Order 12778

The Department of the Interior has conducted the reviews required by section 2 of Executive Order 12778 and has determined that, to the extent allowed by law, this rule meets the applicable standards of subsections (a) and (b) of that section. However, these standards are not applicable to the actual language of State regulatory programs and program amendments since each such program is drafted and promulgated by a specific State, not by OSM. Under sections 503 and 505 of SMCRA (30 U.S.C. 1253 and 1255) and 30 CFR 730.11, 732.15 and 732.17(h)(10), decisions on proposed State regulatory programs and program amendments submitted by the States must be based solely on a determination of whether the submittal is consistent with SMCRA and its implementing Federal regulations and whether the other requirements of 30 CFR parts 730, 731, and 732 have been met.

National Environmental Policy Act

No environmental impact statement is required for this rule since section 702(d) of SMCRA (30 U.S.C. 1292(d)) provides that agency decisions on proposed State regulatory program provisions do not constitute major Federal actions within the meaning of section 102(2)(C) of the National Environmental Policy Act, 42 U.S.C. 4332(2)(C).

Paperwork Reduction Act

This rule does not contain information collection requirements that require approval by the Office of Management and Budget under the Paperwork Reduction Act, 44 U.S.C. 3507 *et seq.*

Regulatory Flexibility Act

The Department of the Interior has determined that this rule will not have a significant economic impact on a substantial number of small entities under the Regulatory Flexibility Act (5 U.S.C. 601 *et seq*). The State submittal which is the subject of this rule is based upon counterpart Federal regulations for which an economic analysis was prepared and certification made that such regulations would not have a significant economic effect upon a substantial number of small entities. Hence, this rule will ensure that existing requirements previously promulgated by OSM will be implemented by the State. In making the determination as to whether this rule would have a significant economic impact, the Department relied upon the data and assumptions for the counterpart Federal regulations.

List of Subjects in 30 CFR Part 914

Intergovernmental relations, Surface mining, Underground mining.

Dated: December 10, 1993.

Carl C. Close,

Assistant Director, Eastern Support Center.

[FR Doc. 93-30661 Filed 12-15-93; 8:45 am]

BILLING CODE 4310-05-M

---

30 CFR Part 950

Wyoming Permanent Regulatory Program

AGENCY: Office of Surface Mining Reclamation and Enforcement (OSM), Interior.

ACTION: Proposed rule; public comment period and opportunity for public hearing on proposed amendment.

SUMMARY: OSM is announcing the receipt of additional information regarding a proposed amendment to the Wyoming permanent regulatory program (the Wyoming program) under the Surface Mining Control and Reclamation Act of 1977 (SMCRA). Wyoming is requesting OSM to reopen the review of the proposed amendment regarding contemporaneous reclamation that the Director deferred action on in the November 24, 1986, Federal Register (51 FR 42209). The additional information is intended to clarify Wyoming's proposed contemporaneous reclamation amendment as submitted on May 1, 1986.

This document sets forth the times and locations that the Wyoming program and the proposed amendment to that program are available for public inspection, the comment period during which interested persons may submit written comments on the proposed amendment, and procedures that will be followed regarding the public hearing, if one is requested.

DATES: Written comments must be received by 4 p.m., m.s.t. January 18, 1994. If requested, a public hearing on the proposed amendment will be held on January 10, 1994. Requests to present oral testimony at the hearing must be received by 4 p.m., m.s.t. on January 3, 1994.

ADDRESSES: Written comments should be mailed or hand delivered to Guy V. Padgett at the address listed below.

Copies of the Wyoming program, the proposed amendment, and all written comments received in response to this notice will be available for public review at the addresses listed below during normal business hours, Monday through Friday, excluding holidays. Each requester may receive one free copy of the proposed amendment by contacting OSM's Casper Field Office.

Guy V. Padgett, Director, Casper Field Office, Office of Surface Mining Reclamation and Enforcement; 100 East B Street, Room 2128; Casper, WY; 82601-1918. Telephone: (307) 261-5776.

Dennis Hemmer, Director; Wyoming Department of Environmental Quality; Herschler Building, Fourth Floor West; 122 West 25th Street; Cheyenne, Wyoming; 82002. Telephone: (307) 777-7758.

FOR FURTHER INFORMATION CONTACT: Guy V. Padgett; Telephone (307) 261-5776.

SUPPLEMENTARY INFORMATION:

I. Background on the Wyoming Program

On November 26, 1980, the Secretary of the Interior conditionally approved the Wyoming program. General background information on the Wyoming program, including the Secretary's findings, the disposition of comments, and conditions of approval of the Wyoming program can be found in the November 26, 1980, Federal Register (45 FR 78637). Subsequent actions concerning Wyoming's program and program amendments can be found at 30 CFR 950.12, 950.15, and 950.16.

II. Discussion of Proposed Amendment

On May 1, 1986, the State of Wyoming submitted a proposed amendment revising nine Chapters of its approved permanent program regulations, known as the Rules and Regulations of the Wyoming Department of Environmental Quality, Land Quality Division (DEQ/LQD). The amendment was in response to a December 23, 1985, letter that OSM sent in accordance with Federal regulations at 30 CFR 732.17(d). Included in the submittal were proposed regulation changes to Wyoming's Backfilling, Grading and Contouring regulation at Chapter IV, section 3(a)(i), regarding contemporaneous reclamation requirements. Wyoming proposed to revise its regulations by deleting specific time and distance requirements for contemporaneous reclamation and

replacing them with general requirements based on actual mining conditions.

In the May 21, 1986, **Federal Register** (51 FR 18621), OSM announced receipt of the proposed amendment package and invited public comment on it's adequacy. No one requested a public hearing and none was held. The comment period closed on June 20, 1986.

In the November 24, 1986, **Federal Register** (51 FR 42209), the Director of OSM announced the decision to defer action on the proposed revision to the contemporaneous reclamation regulations. At the time of Wyoming's submission, the remand of the counterpart Federal regulation for contemporaneous reclamation time and distance standards, at 30 CFR 816.101, was under appeal by the Secretary as a result of a U.S. District Court for the District of Columbia decision to remand the Federal regulation; *In Re: Permanent Surface Mining Litigation*, 21 ERC 1724, 14 ELR 20617 (D.D.C. 1984). The Director elected to defer a decision pending the outcome of the Secretarial appeal. On January 29, 1988, the U.S. District Court of Appeals for the District of Columbia affirmed the district court decision on contemporaneous reclamation *National Wildlife Federation* v. *Hodel*, 839 F.2d 694 (D.C. Cir. 1988). On December 17, 1991, OSM promulgated new regulations that provided national time and distance performance standards for rough backfilling and grading for surface mining operations at 30 CFR 816.101. Those regulations were subsequently challenged. This challenge resulted in a dismissal without prejudice by the U.S. District Court for the District of Columbia as the result of a joint stipulation that included suspension of the regulation at 30 CFR 816.101, *National Coal Association and American Mining Congress* v. *U.S. Department of the Interior, et al.*, Civ. No. 92–0408–CRR.

By letter dated November 30, 1993, Wyoming submitted a request to OSM to reopen the review of the deferred amendment, along with its rationale for not including time and distance standards and information for compliance determination (Administrative Record No. WY–25–1).

III. Public Comment Procedures

In accordance with the provisions of 30 CFR 732.17(h), OSM is seeking comments on whether the proposed amendment satisfies the applicable program approval criteria of 30 CFR 732.15. If the amendment is deemed adequate, it will become part of the Wyoming program. Review of the proposal should be directed to the originally proposed amendment submitted on May 1, 1986, along with the clarifying information submitted on November 30, 1993.

Written Comments

Written comments should be specific, pertain only to the issue proposed in this rulemaking, and include explanations in support of the commenter's recommendations. Comments received after the time indicated under **DATES** or at locations other than the Casper Field Office will not necessarily be considered in the final rulemaking or included in the administrative record.

Public Hearing

Persons wishing to testify at the public hearing should contact the person listed under **FOR FURTHER INFORMATION CONTACT** by 4 p.m., m.s.t. January 3, 1994. The location and time of the hearing will be arranged with those persons requesting the hearing. If no one requests an opportunity to testify at the public hearing, the hearing will not be held.

Filing of a written statement at the time of the hearing is requested as it will greatly assist the transcriber. Submission of written statements in advance of the hearing will allow OSM officials to prepare adequate responses and appropriate questions.

The public hearing will continue on the specified date until all persons scheduled to comment have been heard. Persons in the audience who have not been scheduled to testify, and who wish to do so, will be heard following those who have been scheduled. The hearing will end after all persons scheduled to testify and persons present in the audience who wish to testify have been heard.

Public Meeting

If only one person requests an opportunity to testify at a hearing, a public meeting, rather than a public hearing, may be held. Persons wishing to meet with OSM representatives to discuss the proposed amendment may request a meeting at the OSM office listed under **FOR FURTHER INFORMATION CONTACT.** All such meetings will be open to the public and, if possible, notices of meetings will be posted at the locations listed under **ADDRESSES.** A written summary of each meeting will be made a part of the administrative record.

IV. Procedural Determinations

Executive Order 12866

This proposed rule is exempted from review by the Office of Management and Budget under Executive Order 12866 (Reduction of Regulatory Burden).

Executive Order 12778

The Department of the Interior has conducted the reviews required by section 2 of Executive Order 12778 (Civil Justice Reform) and has determined that this rule meets the applicable standards of subsections (a) and (b) of that section. However, these standards are not applicable to the actual language of State regulatory programs and program amendments since each such program is drafted and promulgated by a specific State, not by OSM. Under sections 503 and 505 of SMCRA (30 U.S.C. 1253 and 12550) and the Federal regulations at 30 CFR 730.11, 732.15, and 732.17(h)(10), decisions on proposed State regulatory programs and program amendments submitted by the States must be based solely on a determination of whether the submittal is consistent with SMCRA and its implementing Federal regulations and whether the other requirements of 30 CFR parts 730, 731 and 732 have been met.

National Environmental Policy Act

No environmental impact statement is required for this rule since section 702(d) of SMCRA (30 U.S.C. 1292(d)) provides that agency decisions on proposed State regulatory program provisions do not constitute major Federal actions within the meaning of section 102(2)(C) of the National Environmental Policy Act (42 U.S.C. 4332(2)(C)).

Paperwork Reduction Act

This rule does not contain information collection requirements that require approval by OMB under the Paperwork Reduction Act (44 U.S.C. 3507 *et seq.*).

Regulatory Flexibility Act

The Department of the Interior has determined that this rule will not have a significant economic impact on a substantial number of small entities under the Regulatory Flexibility Act (5 U.S.C. 601 *et seq.*). The State submittal which is the subject of this rule is based upon counterpart Federal regulations for which an economic analysis was prepared and certification made that such regulations would not have a significant economic effect upon a substantial number of small entities. Accordingly, this rule will ensure that

existing requirements previously promulgated by OSM will be implemented by the State. In making the determination as to whether this rule would have a significant economic impact, the Department relied upon the data and assumptions for the counterpart Federal regulations.

List of Subjects in 30 CFR Part 950

Intergovernmental relations, Surface mining, Underground mining.

Dated: December 10, 1993.

Raymond L. Lowrie,

Assistant Director, Western Support Center.

[FR Doc. 93-30662 Filed 12-15-93; 8:45 am]

BILLING CODE 4310-05-M

DEPARTMENT OF TRANSPORTATION

Coast Guard

33 CFR Part 156

[CGD 93-081]

Lightering Zones

AGENCY: Coast Guard, DOT.

ACTION: Notice of public meeting and scoping meeting.

SUMMARY: The Coast Guard has received several requests to designate lightering zones in the Gulf of Mexico. In an earlier notice, the Coast Guard announced that it considered these requests as petitions for rulemaking and requested written comments. To further assist it in determining whether to designate lightering zones and conduct associated environmental impact analyses, the Coast Guard will hold a public meeting, which will also serve as a scoping meeting for purposes of the National Environmental Policy Act.

DATES: The meeting will commence at 9 a.m. on January 18, 1994.

ADDRESSES: The meeting will be held in Ballrooms A and B of the Houston Hobby Airport Hilton, 8181 Airport Blvd., Houston, Texas 77061.

FOR FURTHER INFORMATION CONTACT: Lieutenant Commander Walter (Bud) Hunt, Project Manager, Oil Pollution Act (OPA 90) Staff, (G-MS-1), (202) 267-6740. This number is equipped to record messages on a 24-hour basis. Anyone wishing to make a presentation is requested to call this number and give the following information: docket number (CGD 93-081); name; company or organizational affiliation (if any); and the estimated amount of time needed for the comment.

SUPPLEMENTARY INFORMATION:

Drafting Information

The principal persons involved in drafting this Notice are Lieutenant Commander Walter (Bud) Hunt, Project Manager, and Ms. Pamela Pelcovits, Project Counsel, OPA 90 Staff, (G-MS-1).

Background and Discussion

The Coast Guard published a notice of petitions for rulemaking to designate lightering zones in the Gulf of Mexico and request for comment in the Federal Register on December 2, 1993 (58 FR 63544). Information on the requests submitted to the Coast Guard is included in the *Background and Purpose* section of the notice. Copies of the requests and all comments received concerning the requests are available for inspection and copying in the public docket (CGD 93-081) at room 3406, U.S. Coast Guard Headquarters, 2100 Second Street, SW., Washington, DC 20593-0001. The Coast Guard is interested in receiving information on the need for and usefulness, potential costs and benefits, and environmental impact of any decision to designate lightering zones, either those suggested in the requests in the docket or any other locations in the Gulf of Mexico. The Coast Guard is equally interested in receiving comments addressing similar issues in relation to a decision not to designate any lightering zones in the Gulf of Mexico. In addition, the Coast Guard is interested in what would be an appropriate geographic area around a lightering zone in which all lightering would be restricted to the designated zone. Finally, the Coast Guard requests comments on appropriate operating requirements, if any, to include as part of designating any lightering zones.

This is the first time the Coast Guard has been requested to designate lightering zones to allow vessels not equipped with double hulls to off-load oil as provided in section 4115(a) of the Oil Pollution Act of 1990 (Pub. L. 101-380). One of these suggested zones, "South Sabine," would be located in the vicinity of 28°38' N, 93°45' W. Another, "Gulf Mex I," was suggested in the vicinity of 28°00' N, 89°30' W. A decision to designate lightering zones could affect other lightering operations in the vicinity. Because of the potential economic and environmental impacts, the Coast Guard has decided to hold a public meeting at the time and place indicated in this notice.

Dated: December 13, 1993.

R.C. North,

Captain, U.S. Coast Guard, Acting Chief, Office of Marine Safety, Security and Environmental Protection.

[FR Doc. 93-30708 Filed 12-15-93; 8:45 am]

BILLING CODE 4910-14-M

---

33 CFR Part 157

[CGD 91-045]

RIN 2115-AE01

Structural and Operational Measures To Reduce Oil Spills From Existing Tank Vessels Without Double Hulls

AGENCY: Coast Guard, DOT.

ACTION: Notice of public meeting and extension of the comment period.

SUMMARY: The Coast Guard is holding a public meeting on its proposed regulations under the Oil Pollution Act of 1990 (OPA 90) that would require the owners or operators of existing tank vessels over 5,000 gross tons that do not have double hulls to comply with certain structural and operational measures. There is substantial public interest in the rulemaking. The Coast Guard also is extending the comment period for an additional 60 days beyond the original 60 day comment period.

DATES: A public meeting will be held between 9 a.m. and 4 p.m., on Thursday, January 20, 1994. Comments must be received on or before February 21, 1994.

ADDRESSES: The meeting will be held at the U.S. Department of Transportation, 400 Seventh Street, SW., room 2230, Washington, DC 20590.

Comments may be mailed to the Executive Secretary, Marine Safety Council, (G-LRA/3406), U.S. Coast Guard Headquarters, 2100 Second Street, SW., Washington, DC 20593-0001, or may be delivered to room 3406 at the above address between 8 a.m., and 3 p.m., Monday through Friday, except Federal holidays. For more information, the telephone number is (202) 267-6233.

The Executive Secretary maintains the public docket for the rulemaking. Comments will become part of this docket and will be available for inspection or copying at room 3406, U.S. Coast Guard Headquarters. Also, a copy of the Regulatory Impact Analysis (RIA) for the rulemaking is in the public docket (CGD 91-045) and is available for inspection or copying.

FOR FURTHER INFORMATION CONTACT: Mr. Randall N. Crenwelge, Project Manager, OPA 90 Staff, at (202) 267-6220.

SUPPLEMENTARY INFORMATION:

Request for Comments

The Coast Guard encourages interested persons to participate in this rulemaking by submitting written data, views, or arguments. Persons submitting comments should include their names and addresses, identify this rulemaking (CGD 91–045) and the specific section of the NPRM to which each comment applies, and give the reason for each comment. The Coast Guard requests that all comments and attachments be submitted in an unbound format suitable for copying and electronic filing. If not practical, a second copy of any bound materials is requested. Persons wanting acknowledgment of receipt of comments should enclose a stamped, self-addressed postcard or envelope.

The Coast Guard will consider all comments received during the comment period as extended by this Notice.

Drafting Information

The principal persons involved in drafting this document are Mr. Randall N. Crenwelge, Project Manager, and Ms. Pamela Pelcovits, Project Counsel, OPA 90 Staff (G–MS–1).

Background and Discussion

On October 22, 1993, the Coast Guard published a notice of proposed rulemaking (NPRM) entitled, "Structural and Operational Measures to Reduce Oil Spills from Existing Tank Vessels Without Double Hulls," in the **Federal Register** (58 FR 54870). Information concerning the statutory and technical basis for the proposed regulations are included in the preamble of the NPRM.

Since publishing the NPRM, the Coast Guard has received several requests for a public meeting on the proposed regulations. Some of these requests have dealt with technical issues, alternative measures of compliance, and the relationship of this rulemaking to the phase-out schedule for existing vessels without double hulls.

In response to these requests, the Coast Guard will conduct a public meeting on January 20, 1994, to obtain information from the public on the proposed regulations, including applicability, exemptions, and technical issues. The public is invited to discuss the benefits and disadvantages of the methods of compliance proposed in the NPRM and to suggest alternative methods of compliance. The Coast Guard also is interested in evaluations of the effectiveness and costs of the proposed regulations.

The Coast Guard has also received requests to extend the public comment period on this rulemaking. The Coast Guard finds that extending the comment period is appropriate in conjunction with holding a public meeting. Persons unable to attend the public meeting also are encouraged to submit written comments. The comment period is extended until February 21, 1994.

Dated: December 3, 1993.

R.C. North,

Captain, U.S. Coast Guard, Acting Chief, Office of Marine Safety, Security and Environmental Protection.

[FR Doc. 93–30703 Filed 12–15–93; 8:45 am]

BILLING CODE 4910–14–M

---

33 CFR Part 165

[CGD01–93–030]

RIN 2115–AE46

Regulated Navigation Area; Providence River, Providence, RI

AGENCY: Coast Guard, DOT.

ACTION: Notice of proposed rulemaking.

SUMMARY: The Coast Guard proposes to make the deep draft channel between Narragansett Bay Entrance Lighted Horn Buoy NB (LLNR 17675) and Providence River Channel Light 42 (LLNR 18580, Fuller Rock Light), a Regulated Navigation Area (RNA). This action is necessary to protect the maritime community from the hazards to navigation associated with the extreme shoaling that has taken place within the Providence River channel.

DATES: Comments must be received on or before January 18, 1994.

ADDRESSES: Comments should be mailed to Captain of the Port, Providence, 20 Risho Avenue, East Providence, RI 02914 or may be delivered to the above address between 8 a.m. and 4 p.m., Monday through Friday, except Federal holidays.

FOR FURTHER INFORMATION CONTACT: Lieutenant Walt Petig, of Marine Safety Office Providence at (401) 435–2300.

SUPPLEMENTARY INFORMATION:

Request for Comments

The Coast Guard encourages interested persons to participate in this rulemaking by submitting written data, views, or arguments. Persons submitting comments should include their name and address, identify this rulemaking (CGD01–93–030) and the specific section of this proposal to which each comment applies, and give a reason for each comment. Persons wanting acknowledgment of receipt of comments should enclose a stamped, self-addressed postcard or envelope. Marine Safety Office Providence maintains the public docket for this rulemaking, and all comments will become part of this docket and will be available for inspection or copying at the Marine Safety Office Providence, 20 Risho Avenue, East Providence, RI.

The Coast Guard will consider all comments received during the comment period. It may change this proposal in view of the comments.

The Coast Guard plans no public hearing. Persons may request a public hearing by writing to Marine Safety Office, Providence at the address under **ADDRESSES**. If it determines that the opportunity for oral presentations will aid this rulemaking, the Coast Guard will hold a public hearing at a time and place announced by a later notice in the **Federal Register**.

Drafting Information

The principal persons involved in drafting this regulation are Lieutenant W. Petig, Project Manager for the Coast Guard Captain of the Port, Providence, Lieutenant Commander J. Stieb, Project Counsel for the First Coast Guard District Legal Office and Lieutenant M. Swegles, Project Coordinator for the First Coast Guard District Aids to Navigation and Waterways Management Branch.

Regulatory History

On February 17, 1993, the Captain of the Port, Providence, signed an emergency safety zone regulation for the Providence River Channel. This regulation was published in the **Federal Register** on March 16, 1993 (58 FR 14151). The Captain of the Port, Providence requested comments concerning the safety zone regulation and received none. This emergency safety zone Regulation imposed restrictions on vessel traffic pertaining to maximum allowable drafts, one way traffic, and communications.

Background and Purpose

On February 2, 1993, the Captain of the Port, Providence, received a copy of a letter addressed to Governor Bruce Sundlun, Governor of Rhode Island, from the Navigation Division of the New England Division of the Army Corps of Engineers. Accompanying the letter were the results of a hydrographic survey of the Providence River Federal navigation channel conducted during the summer and fall months of 1992 and completed in January 1993. This survey shows that mid-channel shoaling of 3 to 8 feet is taking place in the northern section of the channel. The northern

section of the channel is also experiencing shoaling along the outer edges. In this area, the shoaling is from 6 to 10 feet and is significantly narrowing the available channel for deep draft vessels. This extreme shoaling is a hazard to navigation for deep draft commercial traffic entering and leaving the Port of Providence.

To provide for the safety of the port, the Captain of the Port, Providence, signed an emergency safety zone regulation on February 17, 1993. This regulation was published in the **Federal Register** on March 16, 1993 (58 FR 14151). Comments were solicited and none were received. The emergency Safety Zone regulations have been accepted by local mariners and no complaints have been lodged.

Governor Sundlun has since organized a task force to study the need for dredging in the affected areas. However, due to the contamination of the dredge spoils and local environmental concerns, a decision is not expected in the near future. The proposed RNA is the appropriate regulatory mechanism for regulating vessel traffic over an extended period of time. It is designed to protect the Port of Providence from any deep draft vessel casualty due to shoaling that may result in a grounding or associated casualty leading to loss of life, injury, property loss, oil or hazardous material discharge, or blockage of the channel.

Discussion of Proposed Regulations

The existing safety zone regulations place maximum draft limits on vessels, require one-way traffic for vessels over 65 feet in length, require Safety Signal (SECURITE) calls by transiting vessels, and require vessels less than 65 feet in length to keep clear of deep draft vessels. The safety zone regulations are largely adopted by the proposed RNA. The proposed RNA differs from the safety zone regulations by enlarging the area which is regulated, adding a restriction concerning operations in reduced visibility and reducing the number of SECURITE call locations for outbound vessels.

The proposed RNA increases the boundaries of the regulated area to ensure that it includes all geographic areas in which the vessel's transit is regulated. The proposed RNA requires a minimum of one mile of visibility prior to entering designated portions of the regulated area for vessels with drafts greater than 35 feet. This requirement will help to ensure that the mariner can use visual aids to navigation to assist in determining the vessel's position within the channel. The proposed RNA decreases the SECURITE call points for vessels outbound for sea by eliminating the required calls for outbound vessels which have transited past the shoaled areas. All vessel operators are encouraged to continue to make SECURITE calls from traditional locations or as conditions warrant.

Regulatory Evaluation

This proposal is not considered a significant regulatory action under Executive Order 12866 and is not significant under the "Department of Transportation Regulatory Policies and Procedures" (44 FR 11040, February 26, 1979). The Coast Guard expects the economic impact of this proposal to be so minimal that a full Regulatory Evaluation is unnecessary. The emergency regulations have been in effect since February 17, 1993. Commercial operators utilizing the Port of Providence have reported no problems or economic burdens due to these regulations. The volume of commercial traffic utilizing this waterway is such that the costs incurred due to delays because of one-way traffic or reduced visibility are considered minimal and are far outweighed by the extra measures of safety provided by the regulations.

Small Entities

Under the Regulatory Flexibility Act (5 U.S.C. 601 *et seq.*), the Coast Guard must consider whether this proposal, if adopted, will have a significant economic impact on a substantial number of small entities. "Small entities" include independently owned and operated small businesses that are not dominant in their field and that otherwise qualify as "small business concerns" under section 3 of the Small Business Act (15 U.S.C. 632). For the reasons discussed in the Regulatory Evaluation, the Coast Guard expects the economic impact of this rule to be minimal on all entities. Therefore, the Coast Guard certifies under 5 U.S.C. 605(b) that this proposal, if adopted, will not have a significant economic impact on a substantial number of small entities.

Collection of Information

This rule contains no collection of information requirements under the Paperwork Reduction Act (44 U.S.C. 3501 *et seq.*).

Federalism

The Coast Guard has analyzed this proposal in accordance with the principles and criteria contained in Executive Order 12612 and has determined that this proposed rule did not have sufficient federalism implication to warrant the preparation of a Federalism Assessment.

Environment

The environmental impact of the proposed rule has been evaluated using the Coast Guard's procedures for implementing the National Environmental Policy Act (Commandant Instruction M16475.1B). Under section 2.B.2.(c) of these procedures, it is concluded that this action is categorically excluded from further environmental documentation. A Categorical Exclusion Determination is available in the docket for inspection or copying where indicated under **ADDRESSES.**

List of Subjects in 33 CFR Part 165

Harbors, Marine safety, Navigation (water), Reporting and recordkeeping requirements, Security measures, Waterways.

Proposed Regulation

For the reasons set out in the preamble, the Coast Guard proposes to amend 33 CFR part 165, as follows:

PART 165—[AMENDED]

1. The authority citation for part 165 continues to read as follows:

Authority: 33 U.S.C. 1231; 50 U.S.C. 191; 33 CFR 1.05–1(g), 6.04–1, 6.04–6, and 160.5; 49 CFR 1.46.

2. Section 165.122 is added to read as follows:

§ 165.122 Providence River, Providence, R.I. regulated navigation area.

(a) *Description of the regulated navigation area (RNA).*

The Regulated Navigation Area (RNA) encompasses the deep draft channel between Narragansett Bay Entrance Lighted Horn Buoy NB (LLNR 17675) 41–23.0N Latitude, 71–23.4W Longitude, and Fox Point, Providence.

(b) *Regulations.*

(1) The following restrictions apply in the portion of the regulated area between Conimicut Light (LLNR 18305) and Channel Light 42 (Fuller Rock Light, (LLNR 18580)).

(i) No vessel with a draft greater than 35 feet may transit when water depth is at or below mean low water.

(ii) Vessels with drafts greater than 35 feet but less than 38 feet may transit when water depth is other than at or below mean low water, provided there is sufficient depth under the keel to prevent grounding.

(iii) Vessels with drafts greater than or equal to 38 feet must obtain permission, 48 hours in advance of the desired transit time, from the Captain of the Port, Providence to transit.

(2) Vessels with drafts greater than 35 feet must have at least one mile of visibility to transit the regulated area between Conimicut Light (LLNR 18305) and Channel Light 42 (LLNR 18580, Fuller Rock Light).

(3) Vessels over 65 feet in length are prohibited from passing, meeting, or overtaking other vessels over 65 feet in length in the regulated area from:

(i) Gaspee Point to Channel Light 42, (Fuller Rock Light, LLNR 18580).

(ii) Conimicut Point Reach (Conimicut Light, LLNR 18305) to Channel Lighted Buoy 19, 41–43.7N Latitude, 71–21.8W Longitude, (LLNR 18330) and Channel Lighted Buoy 20, 41–43.7N Latitude, 71–21.8W Longitude (LLNR 18335).

(4) Vessels over 65 feet in length inbound for berths up the Providence River, planning to transit through the deep draft channel, are required to make Safety Signal (SECURITE) calls on both VHF channels 13 and 16 at the following geographic locations: Pilot's Station, Abeam of Castle Hill, Approaching the Newport bridge, South of Prudence Island, Abeam of Sandy Point, Abeam of Popasquash Point, Approaching the Southern End of Rumstick Neck Reach, Abeam of Conimicut Point Light (LLNR 18305), Abeam of Gaspee Point, Abeam of Sabin Point and upon mooring.

(5) Vessels over 65 feet in length outbound for sea down the Providence River Channel transiting through this regulated navigation area are required to make SECURITE calls on VHF channels 13 and 16 at the following geographic locations: One-half hour prior to departure from the berth, at departure from the berth, Abeam of Sabin Point, Abeam of Gaspee Point, and Abeam of Conimicut Light (LLNR 18305).

(6) Vessels 65 feet and under in length and all recreational vessels when meeting deep draft vessel traffic in the Providence River Channel between Conimicut Light (LLNR 18305) and Channel Light 42 (LLNR 18580, Fuller Rock Light) shall keep out of the way of the oncoming deep draft vessel.

(7) The Captain of the Port, Providence, may authorize a deviation from these regulations.

(c) *Enforcement.*

Violations of this regulated navigation area should be reported to the Captain of the Port, Providence at (401) 435–2300. Persons in violation of these regulations will be subject to civil penalty under § 165.13(b) of this part.

Dated: December 6, 1993.

Kent H. Williams,

Rear Admiral, U.S. Coast Guard, Commander, First Coast Guard District.

[FR Doc. 93–30704 Filed 12–15–93; 8:45 am]

BILLING CODE 4910–14–M

DEPARTMENT OF TRANSPORTATION

Coast Guard

33 CFR Parts 166 and 167

DEPARTMENT OF COMMERCE

National Oceanic and Atmospheric Administration

15 CFR Parts 935, 936, 942, and 944

[CGD 93–044]

Port Access Routes Off the Coast of California; Vessel Traffic Regulations for Offshore California National Marine Sanctuaries

AGENCIES: Coast Guard, Department of Transportation (DOT); National Oceanic and Atmospheric Administration (NOAA), Department of Commerce (DOC).

ACTION: Notice of study; reopening of comment period.

SUMMARY: On August 24, 1993, the Coast Guard and the National Oceanic and Atmospheric Administration published a notice of a study to evaluate the need for vessel routing measures to regulate vessel traffic in the offshore California National Marine Sanctuaries to protect Sanctuary resources. The comment period is reopened until January 18, 1994.

DATES: Comments must be received on or before January 18, 1994.

ADDRESSES: Comments may be mailed to the Executive Secretary, Marine Safety Council (G–LRA/3406) (CGD 93–044), U.S. Coast Guard Headquarters, 2100 Second Street SW., Washington, DC 20593–0001, or comments may be delivered to room 3406 at the same address between the hours of 8 a.m. and 3 p.m., Monday through Friday, except Federal holidays. The telephone number is (202) 267–1477.

The Executive Secretary maintains the public docket for this notice. Comments will become part of this docket and will be available for inspection or copying at room 3406, U.S. Coast Guard Headquarters.

FOR FURTHER INFORMATION CONTACT: Margie G. Hegy, Project Manager, U.S. Coast Guard, Office of Navigation Safety and Waterway Services, (202) 267–0415; or Commander Terry D. Jackson, Sanctuary Manager, Monterey Bay National Marine Sanctuary, (408) 647–4201.

SUPPLEMENTARY INFORMATION: On August 24, 1993, the Coast Guard and NOAA published a notice announcing and describing a joint study of port access routes for coastal California and vessel traffic in the offshore California Sanctuaries, and inviting the submission of comments and information (58 FR 44634). The original deadline for submission of comments and information was November 22, 1993. The Coast Guard and NOAA are interested in receiving information and opinions from persons who have an interest in safe routing of vessels and protection of environmental resources in the study area including the maritime community, offshore development concerns, and any other interested parties. In order to encourage meaningful participation from these groups, the Coast Guard and NOAA are reopening the comment period until January 18, 1994.

Persons submitting comments should include their names and addresses, and identify this notice (CGD 93–044). All comments and attachments should be submitted in an unbound format suitable for copying and electronic filing. If not practical, a second copy of any bound material is requested. Persons wanting acknowledgment of receipt of comments should enclose a stamped self-addressed post card or envelope.

Dated: December 10, 1993.

W.J. Ecker,

Rear Admiral, U.S. Coast Guard, Chief, Office of Navigation Safety and Waterway Services.

W. Stanley Wilson,

Assistant Administrator for Ocean Services and Coastal Zone Management.

[FR Doc. 93–30707 Filed 12–15–93; 8:45 am]

BILLING CODE 4910–14–M

ENVIRONMENTAL PROTECTION AGENCY

40 CFR Part 52

[IL 46–1–5494; FRL–4874–2]

Approval and Promulgation of Implementation Plans; Illinois

AGENCY: Environmental Protection Agency (EPA).

ACTION: Proposed rule.

SUMMARY: The United States Environmental Protection Agency (USEPA) is proposing to disapprove a March 9, 1992, request by Beeco Manufacturing Company (Beeco), Inc., to incorporate certain operating restrictions for its Chicago, Illinois, facility into the Chicago Federal

Implementation Plan for ozone (Chicago FIP). This restriction (which attempts to limit emissions of volatile organic compounds (VOC) to less than 100 tons per year) seeks to exempt Beeco from the otherwise applicable emission limits in the Chicago FIP, as promulgated by USEPA on June 29, 1990.

DATES: Comments on this requested revision to the Chicago FIP and on USEPA's proposed rulemaking action must be received by January 18, 1994. A public hearing, if requested, will be held in Chicago, Illinois. Requests for a hearing should be submitted to J. Elmer Bortzer by January 18, 1994.

ADDRESSES: Written comments on this proposed action should be addressed to: J. Elmer Bortzer, Chief, Regulation Development Section (AR-18J), U.S. Environmental Protection Agency, Region 5, 77 West Jackson Boulevard, Chicago, Illinois 60604.

Comments should be strictly limited to the subject matter of this proposal, the scope of which is discussed below.

Docket: Pursuant to section 307(d)(1) of the Clean Air Act (CAA), 42 U.S.C. 7607(d)(1), this section is subject to the procedural requirements of section 307(d). Therefore, USEPA has established a public docket for this action, A-93-03, which is available for public inspection and copying between 8 a.m. and 4 p.m., Monday through Friday, at the following addresses. We recommend that you contact Randolph O. Cano at (312) 886-6036 before visiting the Chicago location and Jacqueline Brown before visiting the Washington, DC location. A reasonable fee may be charged for copying.

U.S. Environmental Protection Agency, Region 5, Regulation Development Branch (AR-18J), 77 West Jackson Boulevard, Chicago, Illinois 60604.

U.S. Environmental Protection Agency, Docket No. A-93-03, Air Docket (LE-131), room M1500, Waterside Mall, 401 M Street SW., Washington, DC 20460, (202) 245-3639.

FOR FURTHER INFORMATION CONTACT: Steven Rosenthal, Regulation Development Branch (AR-18J), U.S. Environmental Protection Agency, Region 5, 77 West Jackson Boulevard, Chicago, Illinois 60604, (312) 886-6052.

Interested persons may call Hattie Geisler at (312) 886-3199 to see if a hearing will be held and the date and location of any hearing.

SUPPLEMENTARY INFORMATION: Under 40 CFR 52.741(u) in the Chicago FIP, miscellaneous fabricated product manufacturing process sources located in Cook, DuPage, Kane, Lake, McHenry and Will Counties with total Maximum Theoretical Emissions [1] (MTE) of 100 tons or more per calendar year of VOC and which are not covered by a Control Techniques Guideline document, must comply with certain requirements. The rule provides an exemption, however, for sources which are limited to less than 100 tons of VOC emissions per calendar year, before the application of capture systems and control devices, through production or capacity limitations contained in a federally enforceable construction permit or a State Implementation Plan (SIP) or FIP revision.

On March 9, 1992, Beeco requested that USEPA promulgate a FIP revision that would impose the identical limitations on its plant operations as those specified in a January 28, 1992, Illinois Environmental Protection Agency (IEPA) draft operating permit. If granted, this FIP revision would restrict Beeco's use of coatings, including inks, solvents, and other VOC-containing materials so as to keep its VOC emissions below 100 tons per year. IEPA's operating permit contains the following limitations on the VOC content and the amount of VOC-containing materials that can be used at its Chicago facility:

1a. Maximum production shall not exceed 528 square feet of glass per hour and (Beeco) shall not operate more than 2200 hours per year.

b. Operation and emission of the plant shall not exceed the following limits.

	Usage		VOC content	VOC Emissions
	(lbs/mo)	(lbs/yr)	(lb/lb)	(tons/yr)
i. Coatings, including ink	6,000	72,000	0.85	30.6
ii. Solvents	8,000	96,000	1.000	48.00
iii. Other materials, including resist materials	1,250	15,000	0.90	6.75

c. The operation shall use non-VOC degreasers.

2a. The Permittee shall maintain records of the following items and such other items as may be appropriate to allow the Agency to review compliance with the limits in condition 1.

i. glass production and equipment operating hours

ii. usage of materials (lbs/month, lbs/year), VOC content (lb/lb) and VOM emissions (tons/year)

b. These records shall be retained for two (2) years and shall be available for inspection by the Agency.

On April 1, 1992, USEPA informed Beeco, through its consultant, that the descriptions of those items which are the subject of the operating restrictions are too general to be enforceable. Beeco submitted additional information in support of its request for operating restrictions on April 1, 1992, and June 18, 1992.

On May 20, 1992, USEPA informed Beeco (through its consultant) that its April 1, 1992, submittal was insufficient to correct the previously identified deficiencies. Beeco was also informed of the changes necessary for the submission to be acceptable. Beeco's June 18, 1992, submittal did not correct those deficiencies.

Beeco's requested FIP revision must be revised as follows in order to correct its deficiencies:

(1) The various coatings must be specifically identified. There is no way to distinguish "coatings, including ink" in permit condition 1b.i. from "other materials" in 1b.iii.

(2) The coating VOC content and usage rate (in 1b.i. and 1b.iii) must be "as applied", that is, they must include dilution solvent.

(3) The solvent usage rate, in 1b.ii., should include only the cleanup solvent. Dilution solvent must be included with 1b.i. and 1b.iii.

(4) Records must specifically identify each type of coating, solvent, and other materials (used each month), along with its VOC content and usage per month.

[1] Maximum theoretical emissions (MTE) is defined in 40 CFR 52.741(a)(3) as the quantity of volatile organic material emissions that theoretically could be emitted by a stationary source before add-on controls based on the design capacity or maximum production capacity of the source and 8760 hours per year. The design capacity or maximum production capacity includes use of coating(s) or ink(s) with the highest volatile organic material content actually used in practice by the source.

Proposed Rulemaking Action and Solicitation of Public Comment

For the reasons stated above, USEPA is proposing to disapprove Beeco's request for a FIP revision in the form of operating restrictions on the amount of coatings, solvents and other VOC-containing materials used. Public comment is solicited on Beeco's requested revision and on USEPA's proposed rulemaking action. Additionally, if requested, USEPA will provide an opportunity for a public hearing on this proposal. Any hearing will be strictly limited to the subject matter of this proposal, the scope of which is discussed in this proposal. All comments received by the close of the public comment period will be considered in the development of USEPA's final rule.

Under the Regulatory Flexibility Act, 5 U.S.C. 600 *et seq.*, USEPA must prepare a regulatory flexibility analysis assessing the impact of any proposed or final rule on small entities. 5 U.S.C. 603 and 604. Alternatively, USEPA may certify that the rule will not have a significant impact on a substantial number of small entities. Small entities include small businesses, small not-for-profit enterprises, and government entities with jurisdiction over populations of less than 50,000.

This action involves only one source, Beeco. Therefore, USEPA certifies that this RACT promulgation does not have a significant impact on a substantial number of small entities.

Under Executive Order 12291, today's action is not "Major." It has been submitted to the Office of Management and Budget (OMB) for review.

List of Subjects in 40 CFR Part 52

Environmental protection, Air pollution control, Hydrocarbons, Ozone.

Authority: 42 U.S.C. 7401–7671q.

Dated: December 8, 1993.

Carol M. Browner,

Administrator.

[FR Doc. 93–30573 Filed 12–15–93; 8:45 am]

BILLING CODE 6560–50–P

---

40 CFR Part 52

[IL 12–24–5660; FRL–4814–4]

Approval and Promulgation of Implementation Plan; Illinois

AGENCY: Environmental Protection Agency (EPA).

ACTION: Proposed rule.

SUMMARY: On June 29, 1990, EPA promulgated Federal stationary source volatile organic compound (VOC) control measures representing Reasonably Available Control Technology (RACT) for emission sources located in six northeastern Illinois (Chicago area) counties: Cook, DuPage, Kane, Lake, McHenry and Will. EPA also took final rulemaking action on certain VOC RACT rules previously adopted and submitted by the State of Illinois for inclusion in its State Implementation Plan (SIP). Included in EPA's rule was a requirement that paper coating facilities, such as Riverside Laboratories' (Riverside) Kane County facility, be subject to specific emission limits. On August 20, 1991, Riverside filed a petition for reconsideration with EPA in which it contended, based on its economic situation, that the Federal rules were not RACT for its facility. After review of information provided in and subsequent to its petition, EPA agreed to convene a proceeding for reconsideration of the paper coating rule as it applies to Riverside. As a result of EPA's reconsideration, it is proposing revised RACT requirements for Riverside's facility. EPA solicits public comments on this proposed rulemaking action.

DATES: Comments on this proposal must be received by January 18, 1994. A public hearing, if requested, will be held in Chicago, Illinois. Requests for a hearing should be submitted to J. Elmer Bortzer by January 18, 1994.

ADDRESSES: Written comments on this proposed action should be addressed to: J. Elmer Bortzer, Chief, Regulation Development Section (AR–18J), Environmental Protection Agency, Region 5, 77 West Jackson Boulevard, Chicago, Illinois 60604. Comments should be strictly limited to the subject matter of this proposal.

DOCKET: Pursuant to sections 307(d)(1)(B) and (N) of the Clean Air Act (CAA), 42 U.S.C. 7607(d)(1) (B) and (N), this action is subject to the procedural requirements of section 307(d). Therefore, EPA has established a public docket for this action, A–92–66, which is available for public inspection and copying between 8 a.m. and 4 p.m., Monday through Friday, at the following addresses. We recommend that you contact Randolph O. Cano before visiting the Chicago location and Jacqueline Brown before visiting the Washington DC location. A reasonable fee may be charged for copying. U.S. Environmental Protection Agency, Region 5, Regulation Development Branch, Eighteenth Floor, Southeast, 77 West Jackson Boulevard, Chicago, Illinois, 60604, (312) 886–6036.

Environmental Protection Agency, Docket No. A–92–66, Air Docket (LE–131), room M1500, Waterside Mall, 401 M Street SW., Washington, DC 20460, (202) 245–3639.

FOR FURTHER INFORMATION CONTACT: Steve Rosenthal, Regulation Development Branch, Environmental Protection Agency, Region 5, (312) 886–6052, at the Chicago address indicated above.

Interested persons may call Ms. Hattie Geisler at (312) 886–3199 to see if a hearing will be held and the date and location of the hearing.

SUPPLEMENTARY INFORMATION:

I. Background

In an effort to comply with certain requirements under part D of the Clean Air Act (CAA), 42 U.S.C. 7401 *et seq.*, the Illinois Pollution Control Board (IPCB) promulgated certain (RACT I) VOC regulations applicable to sources covered by EPA's initial round of CTGs[1] (Group I) on July 12, 1979. This requirement is discussed in EPA's April 4, 1979, General Preamble for Proposed Rulemaking (44 FR 20372). Although these regulations addressed emissions from paper coating, they did not explicitly deal with their applicability to operations where paper is coated by the saturation process, such as at Riverside's operations. As a result of this perceived ambiguity in its regulations, the IPCB held, on January 5, 1989, that Riverside was not a paper coater under the Illinois rules. *Riverside Laboratories Inc.* v. *IEPA, PCB 87–62.*[2]

EPA's position on the definition of papercoating is contained in its November 24, 1987, Post-1987 Ozone and Carbon Monoxide Policy (52 FR 45108). Appendix D of this policy, "Discrepancies and Inconsistencies Found in Current SIPs," states that "[p]aper and fabric coating should cover saturation operations as well as strictly coating operations."

On May 26, 1988, EPA notified then Governor James R. Thompson that the Illinois SIP was substantially inadequate to achieve the ozone National Ambient Air Quality Standards (NAAQS) in the Chicago and East St. Louis areas. On June 17, 1988, a follow-up letter was sent to Illinois which specifically identified its VOC SIP deficiencies. One of these itemized deficiencies was that

---

[1] CTGs, which contain information on available air pollution control techniques, their costs and effectiveness, provide recommendations on what EPA calls the "presumptive norm" for RACT. EPA has published three groups of CTGs (Group I, Group II and Group III).

[2] The Appellate Court of Illinois dismissed IEPA's appeal of the IPCB Order on November 17, 1989. See *Illinois* v. *Riverside Laboratories, Inc.*, Case No. 2–89–0340.

the definition of paper coating needed to include "saturation operations."

On April 1, 1987, the State of Wisconsin filed a complaint in the United States District Court for the Eastern District of Wisconsin against EPA and sought a judgment that EPA, among other requested actions, be required to promulgate revisions to the Illinois ozone SIP for northeastern Illinois. *Wisconsin* v. *Reilly*, No. 87–C–0395, E.D. Wis. On January 18, 1989, the District Court ordered EPA to promulgate an ozone implementation plan for northeastern Illinois within 14 months of the date of that order. On September 22, 1989, EPA and the States of Illinois and Wisconsin signed a settlement agreement in an attempt to substitute a more acceptable schedule for promulgation of a plan for the control of ozone in the Chicago area. On November 6, 1989, the District Court vacated its prior order and ordered all further proceedings stayed, pending the performance of the settlement agreement.

The settlement agreement calls for the use of a more sophisticated air quality model, allows more time for EPA to promulgate a Federal Implementation Plan (FIP) using the model and requires interim emission reductions while the modeling study is being performed. The interim emission reductions were to be achieved through Federal promulgation of required Volatile Organic Material (VOM)[3] RACT rules which remedy deficiencies in Illinois' regulations.

On December 27, 1989 (54 FR 53080), EPA proposed to disapprove a number of Illinois rules for their failure to meet RACT requirements. This included the definition of paper coating, which did not address saturation operations. On that date, EPA also proposed its own RACT rules, including a definition of paper coating to include the "application of coatings by impregnation and/or saturation." On June 29, 1990 (55 FR 26814), EPA took final action to disapprove the Illinois rules and promulgate the proposed Federal rules, including the proposed definition of paper coating.

On August 30, 1990, Riverside filed a petition for review of EPA's June 29, 1990 rulemaking in the United States Court of Appeals for the Seventh Circuit. Nine other parties filed petitions for review, which were ultimately consolidated by the Court as *Illinois Environmental Regulatory Group ("IERG") et al.* v. *Reilly*, No. 90–2778.

On August 20, 1991, Riverside filed a petition for reconsideration with the Agency in which it contends that its economic status prevents the Federal rules from being RACT for its facility. Riverside further amended that petition on September 5, 1991. In support of its contention, Riverside has submitted new information to EPA concerning its financial situation. Based on this information, EPA has agreed to reconsider the RACT rules for Riverside.

On November 6, 1991, EPA issued a three-month stay pending reconsideration of the applicable FIP rules for Riverside (and one other petitioner). This stay was published on November 20, 1991 (56 FR 33712). On June 23, 1992 (57 FR 27935), EPA published an extension of the stay, but only if and as necessary to complete reconsideration of the subject rules (including any appropriate regulatory action), pursuant to EPA's authority to revise the Federal rules in CAA sections 110(c) and 301(a), 42 USC 7410(c) and 7601(a).

As a result of EPA's decision to reconsider the Federal rules as applicable to Riverside, EPA has conducted a review of the economic information submitted by Riverside. This proposed rule presents the results of this analysis and proposes rulemaking accordingly.

II. Riverside's Operations

Riverside's Kane County facility produces thermoset laminating paper products. These products, which include kitchen cabinets and laminated furniture, are produced by saturating materials composed mainly of cellulose fibers with a resin and solvent mixture in a dip tank, i.e., a trough filled with resin. Prior to 1989, Riverside operated four lines—one compliant solvent-based fabric coating line and three solvent-based polyester lines. These lines emitted (and continue to emit) VOCs. The fabric coating line is not a part of this action.

Since the purchase of Riverside by its current owner in 1986, the company has investigated VOC compliance options, including reformulation of noncompliant coatings and the installation of pollution control equipment. Riverside contends that none of the options investigated was technically feasible or economically reasonable.

In December 1988, Riverside purchased a new water-based coating technology to reduce plantwide emissions while increasing production. This process, known as the melamine resin process, is utilized on one additional line, and produces no VOC emissions. The use of this process, rather than the solvent-based process, reduced plantwide VOC usage levels from 477 tons in 1987 to 388 tons in 1989 even while production increased.[4]

Documents provided by Riverside indicate that the market for polyester or solvent-based products is continuing to decrease. Consequently, Riverside anticipates that it will phase out its solvent-based lines over the next few years. Due to this decline in the use of these processes, plantwide emissions should continue to decrease.

III. RACT Analysis

In EPA's June 29, 1990 rulemaking, EPA reiterated its definition of RACT as the "lowest emission limitation that a particular source is capable of meeting by the application of control technology that is reasonably available considering technological and economic feasibility." 55 FR 26836, citing 44 FR 53762 (September 1979).

In the June 29, 1990 rulemaking, EPA also addressed a comment submitted by Riverside that it was "unfair and unreasonable to require a small business such as Riverside, which has just made a substantial investment in order to reduce its rate of emissions, to place add-on controls on production lines which may be shut down in the near future." 55 FR at 26843. In response to Riverside's comment, EPA stated its concern about the economic impacts that the FIP's regulatory requirements could have in particular instances. In order to evaluate such individual cases, however, EPA noted that it needed sufficient data on each business seeking relief based on unreasonable economic impacts. EPA further noted that Riverside had not provided such information, but could in the future in connection with a site specific SIP revision. 55 FR 26844.

As a result, in addition to the information provided in its August 20, 1991, petition for reconsideration, the documentation which Riverside has submitted to EPA concerning its financial situation includes the following:

1. A March 27, 1991, table which contains Riverside's annual sales figures for the years 1987 through 1990. This table is an attachment to an April 8,

[3] The State of Illinois uses the term "VOM" in its regulations. For the purposes of this RACT analysis, this term is considered equivalent to EPA's use of the term "VOC."

[4] Riverside has represented that it has made a significant capital expenditure to purchase and install its melamine line; and that it has completely committed its assets as collateral for the melamine process. In addition, Riverside's president has committed his personal assets to the bank as a personal guarantee.

1991, letter from Riverside's counsel to EPA.

2. A July 15, 1991, letter from Riverside's counsel to EPA, and enclosures to this letter titled "Technical Justification for Phased-RACT for Riverside Laboratories, Inc." and exhibit B to this Technical Justification, which is an "Annual Statistical Report for Calendar 1990" by the Laminating Materials Association, Inc.

3. A September 11, 1991, letter from Riverside's counsel to EPA, and Attachment C to this letter titled "Riverside Laboratories, Inc. Pounds/Batch and VOC Content of Coatings."

4. An October 1, 1991, letter from Riverside's counsel to EPA, and an attached July 12, 1990, table titled "Riverside Laboratories Compliance Plan (Polyester Production)."

5. A February 5, 1992, letter from K. J. Guillette, President of Riverside, to Louise Gross, Office of Regional Counsel, EPA, Region 5.

EPA has reviewed these documents, copies of which are available in the docket. EPA's analysis is presented in a February 18, 1992, memorandum from Tom Walton of EPA's Cost and Economic Impact Section to Steve Rosenthal of EPA's Region 5 Air and Radiation Division (a copy of which is also available in the docket).

According to these documents, for Riverside to control its three polyester lines, an annualized control cost would be incurred of at least $283,000 per year. In addition, based upon the polyester and melamine sales figures for 1987–90, Riverside would have had to increase its polyester prices significantly to offset this annualized control cost. The declining market in polyester sales and the elasticity of that market, however, would impede Riverside's ability to raise its prices by the full per unit cost of control without reducing its sales. In addition, the information provided by Riverside supports its assertion that it has limited, if any, ability to obtain capital through conventional means in order to finance additional pollution control equipment.

After review of the above information, EPA has preliminarily determined that Riverside has demonstrated that the current FIP RACT limits are not economically feasible for its Kane County facility at this time. Consequently, EPA is today proposing site-specific RACT limitations for the three Polyester lines, Lines C, D, and E as follows. First, Lines C, D and E, shall comply with a VOC emission limitation of 2.9 pounds per gallon (lbs./gal.) no later than December 31, 1996. Prior to December 31, 1996, Lines C, D and E shall comply with an emission limitation of 3.5 lbs./gal., with the following exception: the VOC content of some specified solutions on Line E may exceed the 3.5 lbs./gal. limitation so long as these coatings do not exceed the 1990 maximum emission levels provided in the rule. Finally, the rule establishes annual limits or "caps" on polyester production. Riverside's July 15, 1991, letter documents that the company will be able to achieve a VOC RACT level of 2.9 lbs./gal., at least in part due to the decline in the polyester market, by December 31, 1996.

IV. Summary and Conclusions

Through this proposed rule, EPA is proposing revised RACT limitations for Riverside's Kane County facility. Under this proposal, Lines C, D and E will be required to comply with a VOC limit of 2.9 lbs./gal. no later than December 31, 1996. Prior to that time, interim emission limits are established for both VOC emissions and polyester production.

Public comment is solicited on this proposal for Riverside's facility. Public comments received by the date shown above will be considered in the development of EPA's final rule. Any hearing, if requested, will be strictly limited to the subject of this proposal, the scope of which is discussed in the proposal.

Under the Regulatory Flexibility Act, 5 U.S.C. 600 *et seq.*, EPA must prepare a regulatory flexibility analysis assessing the impact of any proposed or final rule on small entities. 5 U.S.C. 603 and 604. Alternatively, EPA may certify that the rule will not have a significant impact on a substantial number of small entities. Small entities include small businesses, small not-for-profit enterprises, and government entities with jurisdiction over populations of less than 50,000. This action involves only one source, Riverside Laboratories, Inc. Therefore, EPA certifies that this RACT promulgation does not have a significant impact on a substantial number of small entities.

Under Executive Order 12291, today's action is not "Major." It has been submitted to the Office of Management and Budget (OMB) for review.

List of Subjects in 40 CFR Part 52

Environmental protection, Air Pollution control, Hydrocarbons, Incorporation by reference, Intergovernmental relations, Ozone.

Dated: December 8, 1993.

Carol M. Browner,

Administrator.

For the reasons set forth in the preamble, it is proposed that part 52, chapter I, title 40 of the Code of Federal Regulations be amended as follows:

PART 52—[AMENDED]

1. The authority citation for part 52 continues to read as follows:

Authority: 42 U.S.C. 7401–7671q.

Subpart O—Illinois

2. Section 52.741 is amended by adding new paragraph (e)(10) to read as follows:

§ 52.741 Control strategy: Ozone control measures for Cook, DuPage, Kane, Lake, McHenry and Will Counties.

* * * * *

(e) * * * (10) Until December 31, 1996, the control and recordkeeping requirements in this paragraph apply to the three solvent-based polyester paper coating lines (Lines C, D and E) at Riverside Laboratories' Kane County, Illinois facility, instead of the control requirements in paragraphs (e)(1) and (e)(2), of this section and the recordkeeping requirements in paragraph (e)(6) of this section. Compliance with this paragraph must be demonstrated through the applicable coating analysis test methods and procedures specified in paragraph (a)(4)(i) of this section. The requirements in paragraphs (e)(1), (e)(2) and (e)(6) of this section apply to Riverside on and after December 31, 1996.

(i) After (4 months from publication of the final rule), no coatings shall at any time be applied on Lines C, D or E which exceed 3.5 pounds (lbs.) volatile organic material (VOM) per gallon of coating (minus water and any compounds which are specifically exempted from the definition of VOM), except as provided in paragraph (e)(10)(ii) of this section.

(ii) After (4 months from publication of the final rule), the following specifically identified coatings may exceed 3.5 lbs. VOM per gallon of coating (minus water and any compounds which are specifically exempted from the definition of VOM) only if they are applied on Line E and they do not exceed the limits indicated below (minus water and any compounds which are specifically exempted from the definition of VOM):

EXP–5027	4.34 lbs./gallon.
PD 75 CLR ...	4.19 lbs./gallon.
PD 75 BRN ..	4.18 lbs./gallon.

SQZ–54	3.88 lbs./gallon.
SPX–34GL ...	3.51 lbs./gallon.

(iii) Riverside's polyester production from Lines C, D, and E may not exceed the following levels: 35 million square feet per year during and after 1992, 29 million square feet per year during and after 1994, and 25 million square feet during 1996. Compliance with this requirement shall be determined by adding the polyester production from any 12 consecutive months during and after the years indicated, through 1996. That is, the polyester production for any 12 consecutive months starting with January 1992 cannot exceed 35 million square feet; the polyester production from any 12 consecutive months starting with January 1994 cannot exceed 29 million square feet; and the polyester production for the twelve months from January through December 1996 cannot exceed 25 million square feet.

(iv) By (4 months from publication of the final rule), Riverside shall certify to the Administrator that its polyester coating operations will be in compliance with paragraphs (e)(10)(i), (e)(10)(ii), and (e)(10)(iii) of this section. Such certification shall include the following:

(A) The name and identification number of each coating as applied on coating lines C, D and E.

(B) The weight of VOM per volume of each coating (minus water and any compounds which are specifically exempted from the definition of VOM) as applied on each coating line.

(v) The Administrator must be notified at least 10 days prior to the use of any polyester coating not previously identified pursuant to paragraph (e)(10)(iv) of this section. This notification must include the information specified in paragraphs (e)(10)(iv)(A) and (e)(10)(iv)(B) of this section.

(vi) On and after (4 months from publication of the final rule), Riverside shall collect and record all of the following information each day for each coating and maintain the information at the facility for a period of 3 years:

(A) The name and identification number of each coating as applied.

(B) The weight of VOM per volume of each coating (minus water and any compounds which are specifically exempted from the definition of VOM) as applied each day.

(C) Any record showing a VOM content in excess of the emission limits in paragraph (e)(10)(i) or (e)(10)(ii) of this section shall be reported by sending a copy of such record to the Administrator within 30 days following its collection.

(vii) Starting with the first full month after (4 months from publication of the final rule), Riverside shall collect and record the figures on polyester production (in square feet), for each month and maintain the information at the facility for a period of at least 3 years.

* * * * *

[FR Doc. 93–30572 Filed 12–15–93; 8:45 am]

BILLING CODE 6560–50–P

---

40 CFR Part 52

[IL 51–1–5548; FRL–4814–3]

Approval and Promulgation of Implementation Plans; Illinois

AGENCY: Environmental Protection Agency (USEPA).

ACTION: Proposed rule.

SUMMARY: USEPA is proposing to disapprove a May 26, 1992, request by AGI, Incorporated (AGI), to incorporate certain operating restrictions for its Melrose Park, Illinois, facility into the Chicago Federal Implementation Plan for ozone (Chicago FIP). If approved by USEPA, these restrictions (which attempt to limit emissions of volatile organic compounds (VOC) to less than 100 tons per year) would exempt AGI from the otherwise applicable emission limits in the Chicago FIP, as promulgated by USEPA on June 29, 1990 (55 FR 26814).

DATES: Comments on this requested revision to the Chicago FIP and on USEPA's proposed rulemaking action must be received by January 18, 1994. A public hearing, if requested, will be held in Chicago, Illinois. Requests for a hearing should be submitted to J. Elmer Bortzer by January 18, 1994.

ADDRESSES: Written comments on this proposed action should be addressed to: J. Elmer Bortzer, Chief, Regulation Development Section (5AR–18J), U.S. Environmental Protection Agency, Region 5, 77 West Jackson Boulevard, Chicago, Illinois 60604.

DOCKET: Pursuant to section 307(d)(1) of the Clean Air Act (CAA), 42 U.S.C. 7607(d)(1), this action is subject to the procedural requirements of section 307(d). Therefore, USEPA has established a public docket for this action, A–93–19, which is available for public inspection and copying between 8 a.m. and 4 p.m., Monday through Friday, at the following addresses. We recommend that you contact Randolph O. Cano at (312) 886–6036 before visiting the Chicago location and Jacqueline Brown at (202) 245–3639 before visiting the Washington, DC location. A reasonable fee may be charged for copying.

U.S. Environmental Protection Agency, Region 5, Regulation Development Branch, 18th Floor Southwest, 77 West Jackson Boulevard, Chicago, Illinois 60604.

U.S. Environmental Protection Agency, Docket No. A–93–19, Air Docket (LE–131) room M1500, Waterside Mall, 401 M Street, SW., Washington, DC 20460.

FOR FURTHER INFORMATION CONTACT: Steven Rosenthal, Regulation Development Branch, U.S. Environmental Protection Agency, Region 5, 77 West Jackson, Chicago, Illinois, 60604, (312) 886–6052.

Interested persons may call Hattie Geisler at (312) 886–3199 to see if a hearing will be held and the date and location of any hearing.

SUPPLEMENTARY INFORMATION: Under 40 CFR 52.741(x) in the Chicago FIP, sources located in Cook, Du Page, Kane, Lake, McHenry and Will Counties with total Maximum Theoretical Emissions [1] of 100 tons or more per calendar year of VOC [2] and which are not covered by a Control Techniques Guideline document, must comply with certain requirements. The rule provides an exemption, however, for sources which are limited to less than 100 tons of VOC emissions per calendar year, before the application of capture systems and control devices, through production or capacity limitations contained in a federally enforceable construction permit or a State Implementation Plan (SIP) or FIP revision.

On May 26, 1992, AGI requested a FIP revision that would impose the same limitations on certain of its operations as those specified in a draft May 7, 1992, Illinois Environmental Protection Agency (IEPA) operating permit. If granted, this FIP revision would restrict its use of alcohol, alcohol substitutes, fountain additives, and other VOC-containing materials with the intent of keeping its non-papercoating VOC emissions below 100 tons per year. IEPA's draft operating permit contains the following non-papercoating limitations on the VOC content and the

[1] Maximum theoretical emissions (MTE) is defined in 40 CFR 52.741(a)(3) as the quantity of volatile organic material emissions that theoretically could be emitted by a stationary source before add-on controls based on the design capacity or maximum production capacity of the source and 8760 hours per year. The design capacity or maximum production capacity includes use of coating(s) or ink(s) with the highest volatile organic material content actually used in practice by the source.

[2] The term "volatile organic material" (VOM) is used in the Chicago FIP, in which it has the identical definition as VOC.

amount of VOC containing materials that can be used at its Melrose Park facility:

Material	Usage		VOC content % by wt	VOC emissions tons/yr
	lb/mo	lb/yr		
Alcohol	6,500	78,000	99.0	38.6
Alcohol substitute	3,000	36,000	10.2	1.8
Fountain additive	1,834	22,000	59.5	6.6
Other*	8,334	100,000	100.0	50.0
				97.0

*Includes plate cleaners and press wash

This permit is issued based on negligible emissions of volatile organic material from the recovery still. For this purpose, emissions shall not exceed nominal emission rates of 0.1 lb/hour and 0.44 ton/year.

IEPA's draft operating permit requires that the following records be kept:

- Usage of materials (lb/month, lb/year)
- VOC content (% by weight)
- VOC emissions (tons/yr)

AGI's requested FIP revision is not approvable for the following reasons:

1. It has not adequately identified the materials which are the subject of operation/production restrictions. In order for these restrictions to be enforceable, the specific alcohol substitutes and fountain additives must be identified. Without being specifically identified, it could be difficult to determine whether a material is an alcohol substitute, fountain additive, or "other" VOC-containing material, all of which have different VOC content limits.

Both the Chicago FIP and current USEPA guidance on recordkeeping require that VOC-containing materials be specifically identified. An exception may be made where it can be documented that operating and production parameters are not readily limited due to the wide variety of such VOC containing materials and products and due to the unpredictable nature of the operation. See USEPA's June 13, 1989, memorandum titled "Guidance on Limiting Potential to Emit in New Source Permitting." AGI has not done this.

2. The ink used in AGI's offset printing is incorrectly included as paper coating. Offset printing ink emissions are regulated by paragraph 52.741(x) ("other emission sources"), not 52.741(e). The ink emissions should therefore be counted toward the 100 tons maximum theoretical emissions applicability cutoff.

Because of these deficiencies, AGI's request is not enforceable under section 110(a)(2) of the CAA. In addition, the proposal does not constitute reasonably available control technology, as required by part D of the CAA.

Proposed Rulemaking Action and Solicitation of Public Comment

For the reasons stated above, USEPA is proposing to disapprove AGI's request for a FIP revision in the form of operating restrictions on the amount of alcohol, alcohol substitutes, fountain additives, and other VOC-containing materials used. Public comment is solicited on AGI's requested revision and on USEPA's proposed rulemaking action. Additionally, if requested, USEPA will provide a public hearing on this proposal. Any hearing will be strictly limited to the subject matter of this proposal, the scope of which is discussed in this proposal. All comments received by the close of the public comment period will be considered in the development of USEPA's final rule.

Under the Regulatory Flexibility Act, 5 U.S.C. 600 et seq., USEPA must prepare a regulatory flexibility analysis assessing the impact of any proposed or final rule on small entities. 5 U.S.C. 603 and 604. Alternatively, USEPA may certify that the rule will not have a significant impact on a substantial number of small entities. Small entities include small businesses, small not-for-profit enterprises, and government entities with jurisdiction over populations of less than 50,000. This action involves only one source, AGI, Inc. Therefore, USEPA certifies that this proposed disapproval does not have a significant impact on a substantial number of small entities. Furthermore, as explained in this notice, the request does not meet the requirements of the CAA and USEPA cannot approve the request.

Under Executive Order 12291, today's action is not "Major." It has been submitted to the Office of Management and Budget (OMB) for review.

List of Subjects in 40 CFR Part 52

Environmental protection, Air pollution control, Hydrocarbons, Ozone.

Authority: 42 U.S.C. 7401–7671q.

Dated: December 8, 1993.

Carol M. Browner,

Administrator.

[FR Doc. 93–30574 Filed 12–15–93; 8:45 am]

BILLING CODE 6560–50–P

DEPARTMENT OF THE INTERIOR

Bureau of Reclamation

43 CFR Part 230

RIN 1006–AA26

Rules and Regulations for Reclamation of Arid Lands by the United States

AGENCY: Bureau of Reclamation, Interior.

ACTION: Proposed rescission of 43 CFR part 230.

SUMMARY: The current 43 CFR part 230 relates to the management of water rights for individuals receiving benefits from Reclamation irrigation projects. This regulation is outdated because current procedures for managing water rights conform to State requirements rather than procedures stated in this CFR part.

The Bureau of Reclamation's (Reclamation) relationships are with organizations rather than individuals, and homesteading is no longer a primary consideration for Reclamation projects (section 702, Pub. L. 94–579, Federal Land Policy and Management Act of 1976).

DATES: Comments must be received on or before February 14, 1994.

ADDRESSES: Comments should be sent to: Eleanor Ashby, Department of the Interior, Bureau of Reclamation, Supply and Services Division (D–7924), PO Box 25007, Denver, Colorado 80225–0007.

FOR FURTHER INFORMATION CONTACT: Eleanor Ashby, Department of the Interior, Bureau of Reclamation, Supply and Services Division (D-7924), PO Box 25007, Building 67, Denver Federal Center, Denver, Colorado 80225-0007, Tel: 303-236-7183.

SUPPLEMENTARY INFORMATION: This document has been reviewed under Executive Order 12866. It will not have a significant economic effect on a substantial number of small entities under the Regulatory Flexibility Act (5 U.S.C. 601 *et seq.*).

In accordance with the Regulatory Flexibility Act (5 U.S.C. 601 *et seq.*), Reclamation certifies that this rule will not have a significant economic effect on a substantial number of small entities.

The proposed rule to rescind 43 CFR part 230 is determined not to have federalism effects under Executive Order 12612 as it has no direct casual effect on the relative roles of Federal and State Government.

This rule does not contain collections of information that require approval by the Office of Management and Budget under 44 U.S.C. 3501 *et seq.*

The Department of the Interior has determined that this document does not constitute a major Federal action significantly affecting the quality of the human environment under the National Environmental Policy Act of 1969.

The author of this rule is Eleanor Ashby, Bureau of Reclamation.

The policy of the Department of the Interior is, whenever practicable, to afford the public an opportunity to participate in the rulemaking process. Accordingly, interested persons may submit written comments, suggestions or objections regarding the proposed rule to the location identified in the **ADDRESSES** section of this preamble. Comments must be received no later than February 14, 1994.

The Department has certified to the Office of Management and Budget that these proposed regulations meet the applicable standards provided in sections 2(a) and 2(b) of Executive Order 12778.

List of Subjects in 43 CFR Part 230

Administrative practice and procedure, Irrigation, Reclamation, Reporting and recordkeeping requirements.

Under the authority of section 702, Public Law 94-579, the Federal Land Policy and Management Act of 1976, and for the reasons stated in the Preamble, part 230 of the Code of Federal Regulations is proposed to be removed.

Dated: November 4, 1993.

Debra S. Knopman,

Acting Assistant Secretary—Water and Science.

[FR Doc. 93-30656 Filed 12-15-93; 8:45 am]

BILLING CODE 4310-94-P

---

43 CFR Part 406

RIN 1006-AA27

Rules and Regulations for the Exchange or Amendment of Farm Units on Federal Reclamation Projects

AGENCY: Bureau of Reclamation, Interior.

ACTION: Proposed rescission of 43 CFR part 406.

SUMMARY: The current 43 CFR part 406 was written in the 1950's to help carry out the Farm Unit Exchange Act (Act of August 13, 1953, 67 Stat. 556) that provides for the exchange of certain unpatented farm units or private land on a Federal irrigation project, for certain classes of qualified applicants whose lands have been determined, pursuant to a land classification, to be insufficient to support a family, and the amendment of farm units by the addition of contiguous or noncontiguous land on the same project. All farm units that were eligible for exchange have been exchanged, and since the program is no longer active, this part is proposed for rescission.

DATES: Comments must be received on or before February 14, 1994.

ADDRESSES: Comments should be sent to: Eleanor Ashby, Department of the Interior, Bureau of Reclamation, Supply and Services Division (D-7924), P.O. Box 25007, Denver, Colorado 80225-0007.

FOR FURTHER INFORMATION CONTACT: Eleanor Ashby, Department of the Interior, Bureau of Reclamation, Supply and Services Division (D-7924), P.O. Box 25007, Building 67, Denver Federal Center, Denver, Colorado 80225-0007, Tel: 303-236-7183.

SUPPLEMENTARY INFORMATION: This document has been reviewed under Executive Order 12866. It will not have a significant economic effect on a substantial number of small entities under the Regulatory Flexibility Act (5 U.S.C. 601 *et seq.*).

In accordance with the Regulatory Flexibility Act (5 U.S.C. 601 *et seq.*), the Bureau of Reclamation certifies that this rule will not have a significant economic effect on a substantial number of small entities.

The proposed rule to rescind 43 CFR part 406 is determined not to have Federalism effects under Executive Order 12612 as it has no direct casual effect on the relative roles of Federal and State Government.

This rule does not contain collections of information that require approval by the Office of Management and Budget under 44 U.S.C. 3501 *et seq.*

The Department of the Interior has determined that this document does not constitute a major federal action significantly affecting the quality of the human environment under the National Environmental Policy Act of 1969.

The author of this rule is Eleanor Ashby, Bureau of Reclamation.

The policy of the Department of the Interior is, whenever practicable, to afford the public an opportunity to participate in the rulemaking process. Accordingly, interested persons may submit written comments, suggestions or objections regarding the proposed rule to the location identified in the **ADDRESSES** section of this preamble. Comments must be received no later than February 14, 1994.

The Department has certified to the Office of Management and Budget that these proposed regulations meet the applicable standards provided in sections 2(a) and 2(b) of Executive Order 12778.

List of Subjects in 43 CFR Part 406

Administrative practice and procedure, Irrigation, Reclamation, Reporting and recordkeeping requirements.

Under the authority of the Reclamation Act of June 17, 1902, sec. 10, 43, U.S.C. 373 (1976) and the Farm Unit Exchange Act (Act of August 13, 1953, 67 Stat. 556) and for reasons stated in the preamble, part 406 of the Code of Fedeal Regulations, is proposed to be removed.

Dated: November 4, 1993.

Debra S. Knopman,

Acting Assistant Secretary—Water and Science.

[FR Doc. 93-30655 Filed 12-15-93; 8:45 am]

BILLING CODE 4310-94-P

---

43 CFR Part 419

RIN 1006-AA28

Rules and Regulations for Administrative Claims Under Public Works Appropriation Act for Teton Dam

AGENCY: Bureau of Reclamation, Interior.

ACTION: Proposed rescission of 43 CFR part 419.

SUMMARY: The current 43 CFR part 419 provides for the payment of claims for actual damages to or loss of property, income, personal injury, or for death directly resulting from the failure on June 5, 1976, of the Teton Dam of the Lower Teton Division of the Teton Basin Federal Reclamation Project which was authorized by the Act of September 7, 1964 (78 Stat. 925). There is no need for continuation of this rule because all claims against the United States resulting from the failure of Teton Dam have been settled.

DATES: Comments must be received on or before February 14, 1994.

ADDRESSES: Comments should be sent to: Eleanor Ashby, Department of the Interior, Bureau of Reclamation, Supply and Services Division (D-7924), PO Box 25007, Denver, Colorado 80225-0007.

FOR FURTHER INFORMATION CONTACT: Eleanor Ashby, Department of the Interior, Bureau of Reclamation, Supply and Services Division (D-7924), PO Box 25007, Building 67, Denver Federal Center, Denver, Colorado 80225-0007, Tel: 303-236-7183.

SUPPLEMENTARY INFORMATION: This document has been reviewed under Executive Order 12866. It will not have a significant economic effect on a substantial number of small entities under the Regulatory Flexibility Act (5 U.S.C. 601 *et seq*).

In accordance with the Regulatory Flexibility Act (5 U.S.C. 601 *et seq.*), the Bureau of Reclamation certifies that this rule will not have a significant economic effect on a substantial number of small entities.

The proposed rule to rescind 43 CFR part 419 is determined not to have Federalism effects under Executive Order 12612 as it has no direct casual effect on the relative roles of Federal and State Government.

This rule does not contain collections of information that require approval by the Office of Management and Budget under 44 U.S.C. 3501 *et seq.*

The Department of the Interior has determined that this document does not constitute a major federal action significantly affecting the quality of the human environment under the National Environmental Policy Act of 1969.

The author of this rule is Eleanor Ashby, Bureau of Reclamation.

The policy of the Department of the Interior is, whenever practicable, to afford the public an opportunity to participate in the rulemaking process. Accordingly, interested persons may submit written comments, suggestions or objections regarding the proposed rule to the location identified in the **ADDRESSES** section of this preamble. Comments must be received no later than February 14, 1994.

The Department has certified to the Office of Management and Budget that these proposed regulations meet the applicable standards provided in sections 2(a) and 2(b) of Executive Order 12778.

List of Subjects in 43 CFR Part 419

Administrative practice and procedure, Irrigation, Reclamation, Reporting and recordkeeping requirements.

Under the authority of the Annual Public Works Appropriation Act of 1976, Pub. L. 94-180, 89 Stat. 1035, the Act of July 12, 1976, 90 Stat. 889, and the Teton Dam Disaster Assistance Act of 1976, Pub. L. 94-400, 90 Stat. 1211, and for reasons stated in the preamble, part 419 of the Code of Federal Regulations is proposed to be removed.

Dated: November 4, 1993.

Debra S. Knopman,

Acting Assistant Secretary—Water and Science.

[FR Doc. 93-30654 Filed 12-15-93; 8:45 am]

BILLING CODE 4310-94-P

---

43 CFR Part 423

RIN 1006-AA29

Rules and Regulations for Emergency Drought Act Policies, Procedures, and Authorizations

AGENCY: Bureau of Reclamation, Interior.

ACTION: Proposed rescission of 43 CFR part 423.

SUMMARY: This rule prescribes the policies, procedures, and authority of the Bureau of Reclamation (Reclamation) to mitigate losses and damages resulting from the drought conditions in 17 Western States during 1987, 1988, and 1989. This regulation was implemented upon passage of the Disaster Assistance Act of 1988, Public Law 100-387, 102 Stat. 924, August 11, 1988. There is no need for continuation of this regulation because the authorizing legislation expired on December 31, 1989.

DATES: Comments must be received on or before February 14, 1994.

ADDRESSES: Comments should be sent to: Eleanor Ashby, Department of the Interior, Bureau of Reclamation, Supply and Services Division (D-7924), PO Box 25007, Denver, Colorado 80225-0007.

FOR FURTHER INFORMATION CONTACT: Eleanor Ashby, Department of the Interior, Bureau of Reclamation, Supply and Services Division (D-7924), PO Box 25007, Building 67, Denver Federal Center, Denver, Colorado 80225-0007, Tel: 303-236-7183.

SUPPLEMENTARY INFORMATION: This document has been reviewed under Executive Order 12866. It will not have a significant economic effect on a substantial number of small entities under the Regulatory Flexibility Act (5 U.S.C. 601 *et seq*).

In accordance with the Regulatory Flexibility Act (5 U.S.C. 601 et seq.), Reclamation certifies that this rule will not have a significant economic effect on a substantial number of small entities.

The proposed rule to rescind 43 CFR part 423 is determined not to have Federalism effects under Executive Order 12612 as it has no direct casual effect on the relative roles of Federal and State Government.

This rule contains collections of information as defined in the Paperwork Reduction Act (44 U.S.C. 3501 et seq.). The requirement has been approved by the Office of Management and Budget (OMB). The OMB approval number is 1006-0010; OMB expiration date December 31, 1989.

The Department of the Interior has determined that this document does not constitute a major federal action significantly affecting the quality of the human environment under the National Environmental Policy Act of 1969.

The author of this rule is Eleanor Ashby, Bureau of Reclamation.

The policy of the Department of the Interior is, whenever practicable, to afford the public an opportunity to participate in the rulemaking process. Accordingly, interested persons may submit written comments, suggestions or objections regarding the proposed rule to the location identified in the **ADDRESSES** section of this preamble. Comments must be received no later than February 14, 1994.

The Department has certified to the Office of Management and Budget that these proposed regulations meet the applicable standards provided in sections 2(a) and 2(b) of Executive Order 12778.

List of Subjects in 43 CFR Part 423

Administrative practice and procedure, Irrigation, Reclamation, Reporting and recordkeeping requirements.

Under the authority of the Disaster Assistance Act of 1988, Pub. L. 100-387, 102 Stat. 924, August 11, 1988, and for reasons stated in the preamble, part 423 of the Code of Federal Regulations is proposed to be removed.

Dated: November 4, 1993.

Debra S. Knopman

Acting Assistant Secretary—Water and Science

[FR Doc. 93-30653 Filed 12-15-93; 8:45 am]

BILLING CODE 4310-94-P

INTERSTATE COMMERCE COMMISSION

49 CFR Parts 1181, 1182, 1186, and 1188

[Ex Parte No. MC-216]

Jurisdiction Over Motor Finance Transactions

AGENCY: Interstate Commerce Commission.

ACTION: Notice of proposed rulemaking.

SUMMARY: The Commission is proposing to revise its regulations pertaining to motor finance transactions subject to 49 U.S.C. 10926 and 11343. The proposed modifications are necessary to conform Commission regulations to the statutory language and to eliminate existing inconsistencies in the filing rules.

DATES: Comments are due on January 18, 1993.

ADDRESSES: Send comments (an original and 10 copies), referring to Ex Parte No. MC-216, to: Office of the Secretary, Case Control Branch, Interstate Commerce Commission, Washington, DC 20423.

FOR FURTHER INFORMATION CONTACT: Richard B. Felder (202) 927-5610. (TDD for hearing impaired: (202) 927-5721.)

SUPPLEMENTARY INFORMATION: The proposal would clarify and redefine the term "aggregate gross operating revenues" in 49 U.S.C. 11343(d)(1) to mean: Revenues of all motor carrier parties and all of their motor carrier affiliates from all transportation sources, regardless of whether such revenues are from interstate, intrastate, regulated, or unregulated operations.

Additional information is contained in the Commission's decision. To obtain a copy of the full decision, write to, call, or pick up in person from: Office of the Secretary, room 2215, Interstate Commerce Commission Building, Washington, DC 20423. Telephone: (202) 927-7428.

(Assistance for the hearing impaired is available through TDD Service (202) 927-5721)

Environmental and Energy Considerations

This rulemaking does not require environmental review because it does not have the potential for significant environmental impacts. 49 CFR 1105.6(c)(7).

Initial Regulatory Flexibility Analysis

Under 5 U.S.C. 605(b), we preliminarily conclude that our proposed action in this proceeding will not have a significant economic impact on a substantial number of small entities. Our proposed action will not impose any additional reporting, recordkeeping, or compliance requirements upon any entities; nor will there be any change in the current filing requirements governing transactions subject to either 49 U.S.C. 10926 or 11343. The only change that may result from our proposed action is that some transactions that formerly would have qualified for treatment as small carrier transfers under section 10926 will be processed under section 11343.

Prior approval under these sections is required only when carriers are involved in transactions to buy or sell, merge, or change the control of interstate operating rights. We cannot, however, accurately project any foreseeable economic impact on small entities because jurisdiction over a transaction is determined by the combined revenues of the parties. Therefore, under our current rules, small carriers involved in transactions with large carriers are already subject to section 11343.

Small entities affected by the change in policy would not be subjected to any additional recordkeeping requirements because filing status is determined based on the financial records which must be kept by all carriers. Nor would there be any increase in filing fees because the fees for both types of transactions are identical. Moreover, burdensome filing requirements over time have been substantially reduced to facilitate handling of transactions under both sections 10926 and 11343. As a result, virtually all section 11343 transactions are currently handled as petitions for exemption, using expedited procedures not unlike those currently available for small carrier transfers under section 10926. Conversely, elimination of the current confusing and contradictory rules will benefit those small entities wishing to prepare and process their own pleadings. These rule simplifications will also reduce the need for revision by Commission staff or delays caused when additional information is required. Therefore, we foresee no appreciable additional burden on any small entity that might be affected by our proposed changes.

List of Subjects

49 CFR Part 1181

Administrative practice and procedure, Brokers, Motor carriers, Moving of household goods.

49 CFR Part 1182

Administrative practice and procedure, Motor carriers.

49 CFR Part 1186

Administrative practice and procedure, Freight forwarders, Motor carriers.

49 CFR Part 1188

Administrative practice and procedure, Motor carriers.

Decided: December 2, 1993.

By the Commission Chairman McDonald, Vice Chairman Simmions, Commissioners Phillips, Philbin, and Walden.

Sidney L. Strickland, Jr.,

Secretary.

For the reasons set forth in the preamble, title 49, chapter X, parts 1181, 1182, 1186, and 1188 are proposed to be amended as follows:

PART 1181—TRANSFERS OF OPERATING RIGHTS UNDER 49 U.S.C. 10926

1. The authority citation for part 1181 continues to read as follows:

Authority: 5 U.S.C. 553, and 49 U.S.C. 10321 and 10926.

2. Section 1181.2(b)(2)(ii) is revised to read as follows:

§ 1181.2 Applications.

* * * * *

(b) * * *

(2) * * *

(ii) A jurisdictional statement stating why the transaction is not subject to 49 U.S.C. 11343. If two or more motor carriers are applicants or affiliated with applicants, the jurisdictional statement must affirmatively state that the $2 million threshold at 49 U.S.C. 11343(d)(1) is not exceeded. The regulations for computing gross operating revenues are found at 49 CFR part 1188.

PART 1182—PURCHASE, MERGER, AND CONTROL OF MOTOR PASSENGER CARRIERS AND WATER CARRIERS

3. The authority citation for part 1182 continues to read as follows:

Authority: 5 U.S.C. 559, 49 U.S.C. 10321, 11321, 11341, 11343, 11344, and 11345a; 21 U.S.C. 853a.

4. Section 1182.3(a)(5) is revised to read as follows:

§ 1182.3 Content of applications.

(a) * * *

(5) A jurisdictional statement stating why the transaction is subject to 49 U.S.C. 11343. If two or more motor carriers are applicants or affiliated with applicants, the jurisdictional statement must affirmatively state that the $2 million threshold at 49 U.S.C. 11343(d)(1) is exceeded. The regulations for computing gross operating revenues are found at 49 CFR part 1188.

* * * * *

PART 1186—EXEMPTION OF CERTAIN TRANSACTIONS UNDER 49 U.S.C. 11343

5. The authority citation for part 1186 continues to read as follows:

Authority: 49 U.S.C. 11321, 11343(e), 5 U.S.C. 553; and 21 U.S.C. 853a.

6. Section 1186.2(d) is revised to read as follows:

§ 1186.2 Notice of exemption.

* * * * *

(d) A jurisdictional statement stating why the transaction is subject to 49 U.S.C. 11343 and may be exempted under 49 U.S.C. 11343(e). The jurisdictional statement must affirmatively state that the $2 million threshold at 49 U.S.C. 11343(d)(1) is exceeded. The regulations for computing gross operating revenues are found at 49 CFR part 1188.

* * * * *

7. Part 1188 is revised to read as follows:

PART 1188—GROSS OPERATING REVENUES OF CARRIERS INVOLVED IN MOTOR FINANCE PROCEEDINGS

§ 1188.1 Definitions and guidelines.

For the purpose of this part, the following definitions and guidelines apply:

(a) The term *motor carrier* at 49 U.S.C. 11343(d)(1) means a motor carrier providing transportation subject to the jurisdiction of the Interstate Commerce Commission.

(b) The term *gross operating revenues* at 49 U.S.C. 11343(d)(1) means revenues of all motor carrier parties and all of their motor carrier affiliates from all transportation sources, regardless of whether such revenues are from interstate, intrastate, regulated, or unregulated operations.

Authority: 5 U.S.C. 559 and 49 U.S.C. 10321, 11341, 11343, 11344, and 11345a.

(c) The motor carrier parties and their motor carrier affiliates may select a consecutive 12-month period ending not more than 6 months before the date of the parties' agreement covering the transaction. They must, however, select the same 12-month period.

(d) If the validity of the jurisdictional statement required at 49 CFR 1181.2(b)(2)(ii), 1182.3(a)(5), or 1186.2(d) is challenged, applicants must submit financial documentation substantiating the amounts claimed.

[FR Doc. 93-30724 Filed 12-15-93; 8:45 am]

BILLING CODE 7035-01-P

DEPARTMENT OF THE INTERIOR

Fish and Wildlife Service

50 CFR Part 17

Endangered and Threatened Wildlife and Plants; Extension of Comment Period and Public Hearing on Proposed Endangered Status for Etowah Darter and Proposed Threatened Status for Cherokee Darter

AGENCY: Fish and Wildlife Service, Interior.

ACTION: Proposed rule; extension of comment period and notice of public hearing.

SUMMARY: The Service gives notice that the comment period is extended on the proposal to list the Etowah darter and Cherokee darter as endangered and threatened, respectively, pursuant to the Endangered Species Act (Act) of 1973, as amended. A public hearing will allow all interested parties to orally submit comments on this proposal.

DATES: The public hearing will be held from 7 p.m. to 9:30 p.m. on January 12, 1994. The comment period on the proposal is extended until January 24, 1994.

ADDRESSES: The public hearing will be held in Canton, Georgia at the Cherokee County Administrative Building, third floor courtroom, located at 130 East Main Street. Written comments and materials concerning the proposal should be sent to the U.S. Fish and Wildlife Service, 6620 Southpoint Drive South, Suite 310, Jacksonville, Florida 32216. Comments and materials received will be available for public inspection, by appointment, during normal business hours at the above address.

FOR FURTHER INFORMATION CONTACT: Michael M. Bentzien, Assistant Field Supervisor, at the above address (telephone: 904/232-2580, fax 904/232-2404).

SUPPLEMENTARY INFORMATION:

Background

On October 18, 1993, the Service published a proposal (58 FR 53696) to add the Etowah darter and Cherokee darter to the List of Endangered and Threatened Wildlife. These two fishes are endemic to the Etowah River system in north Georgia. Primary threats to these fishes are habitat degradation attributed to impoundments, poor landuse planning, sedimentation, and poor water quality.

Section 4(b)(5)(E) of the Act requires that a public hearing be held if it is requested within 45 days of the publication of a proposed rule. On December 1, 1993, the Service received a request for a public hearing on the proposal to list these two fishes from Mr. John N. Brandenburg, Chairman of the Cherokee County Board of Commissioners. Those parties wishing to make statements for the record are encouraged to bring a written copy of their statements to present to the Service at the start of the hearing. Oral statements may be limited in length if the number of parties present at the hearing necessitates such a limitation. There are, however, no limits to the length of written comments or materials presented at the hearing or mailed to the Service. Written comments should be submitted to the Service office in the ADDRESSES section.

Author

The primary author of this notice is Robert S. Butler, U.S. Fish and Wildlife Service, 6620 Southpoint Drive South, suite 310, Jacksonville, Florida 32216 (telephone: 904/232-2580 or fax 904/232-2404).

Authority

The authority for this action is the Endangered Species Act (16 U.S.C. 1531-1544).

Dated: December 9, 1993.

James W. Pulliam, Jr.,

Regional Director.

[FR Doc. 93-30720 Filed 12-15-93; 8:45 am]

BILLING CODE 4310-55-M

Notices

Federal Register
Vol. 58, No. 240
Thursday, December 16, 1993

This section of the FEDERAL REGISTER contains documents other than rules or proposed rules that are applicable to the public. Notices of hearings and investigations, committee meetings, agency decisions and rulings, delegations of authority, filing of petitions and applications and agency statements of organization and functions are examples of documents appearing in this section.

DEPARTMENT OF AGRICULTURE

Forms Under Review by Office of Management and Budget

December 10, 1993.

The Department of Agriculture has submitted to OMB for review the following proposal for the collection of information under the provisions of the Paperwork Reduction Act (44 U.S.C. chapter 35) since the last list was published. This list is grouped into new proposals, revisions, extension, or reinstatements. Each entry contains the following information:

(1) Agency proposing the information collection; (2) Title of the information collection; (3) Form number(s), if applicable; (4) How often the information is requested; (5) Who will be required or asked to report; (6) An estimate of the number of responses; (7) An estimate of the total number of hours needed to provide the information; (8) Name and telephone number of the agency contact person.

Questions about the items in the listing should be directed to the agency person named at the end of each entry. Copies of the proposed forms and supporting documents may be obtained from: Department Clearance Officer, USDA, OIRM, Room 404–W Admin. Bldg., Washington, DC 20250, (202) 690–2118.

Revision

• Foreign Agricultural Service
Market Promotion Program Interim Regulations
On Occasion, annually
State or local governments; Business or other for-profit; Federal agencies or employees; Non-profit institutions; Small businesses or organizations; 1020 responses; 81,600 hours
Sharon McClure or William Westman (202) 720–5521.

New Collection

• Food Safety and Inspection Service
Ascorbic Acid, Erythorbic Acid, Citric Acid, Sodium Ascorbate, and Sodium Citrate on Fresh Beef and Lamb Cuts.
On occasion
Business or other for-profit; Small businesses or organizations; 600 responses; 1200 hours
Victoria Levine (202) 720–7163.

• Forest Service
Understanding People & Natural Resource Relationships: A Study of Attitude and Beliefs Toward Ecosystem Management
On occasion
Individuals or households; 1000 responses; 250 hours
Dr. Michael Tarrant (706) 542–4332.

• Agricultural Stabilization and Conservation Service
7 CFR 1421.25—Market Price Repayments
CCC–599
Annually
Small businesses or organizations; 24 responses; 6 hours
Gene Rosera (202) 720–6734.

• Federal Crop Insurance Corporation
Nursery Frost, Freeze and Cold Damage Exclusion Option
FCI–577
On occasion
Individuals or households; Farms; 50 responses; 25 hours
Bonnie L. Hart (202) 254–8393.

• Federal Crop Insurance Corporation
Nursery Provision Plant Inventory Summary
FCI–546
On Occasion
Individuals or households; Farms; 50 responses; 50 hours
Bonnie L. Hart (202) 254–8393.

• Food and Nutrition Service
National School Lunch Program School Drop-out Study
One time only
Individuals or households; Non-profit institutions; 2,160 responses; 819 hours
Ana Maria Mendez (703) 305–2118.

Donald E. Hulcher,
Deputy Department Clearance Officer.

[FR Doc. 93–30621 Filed 12–15–93; 8:45 am]
BILLING CODE 3410-01-M

Forest Service

North Yuba Trail Construction, Tahoe National Forest, Sierra County, CA

AGENCY: Forest Service, USDA.

ACTION: Notice of intent to prepare an environmental impact statement.

SUMMARY: The U.S. Department of Agriculture, Forest Service will prepare an environmental impact statement (EIS) for proposed construction of a seven and one-half mile trail from Rocky Rest Camping Area in Indian Valley along the south side of the North Yuba River to a trail head south of the Goodyears Bar community. An encroachment permit will be needed from Sierra County to allow a parking area for hikers near the trail head south of Goodyears Bar on County Road # S300.

The proposed action has been documented as a need in both the North Yuba Recreation Management Plan (April 1967) and the Recreation Master Plan for the North Yuba River (December 1990). The proposed action is consistent with the Tahoe National Forest Land and Resource Management Plan.

The agency invites comments and suggestions on the scope of the analysis. In addition, the agency gives notice of the full environmental analysis and decision-making process that will occur on the proposal so that interested and affected people are aware of how they may participate and contribute to the final decision.

DATES: Comments concerning the analysis should be received in writing by January 31, 1994.

ADDRESSES: Written comments concerning the project should be directed to Jean M. Masquelier, District Ranger, Downieville Ranger District, North Yuba Ranger Station, 15924 Hwy 49, Camptonville, CA 95922.

FOR FURTHER INFORMATION CONTACT: Mary Furney, Dispersed Recreation Assistant, Downieville Ranger District, North Yuba Ranger Station, Camptonville, CA 95922, telephone 916 288–3231 or 916 478–6253.

SUPPLEMENTARY INFORMATION: In preparing the environmental impact statement, the Forest Service will identify and analyze a range of alternatives for trail construction. One of the alternatives will be no construction. Other alternatives will consider various travel routes and additional trail and bridge construction.

Public participation will be important at several points during the analysis, especially the review of the Draft

Environmental Impact Statement. The first point is during the scoping process. The Forest Service will be seeking information, comments, and assistance from Federal, State, and local agencies and other individuals or organizations who may be interested in or affected by the proposed action. This input will be used in preparation of the draft environmental impact statement (DEIS). The scoping process includes:

1. Identifying potential issues.
2. Identifying issues to be analyzed in depth.
3. Eliminating insignificant issues or those which have been covered by a relevant previous environmental analysis.
4. Exploring additional alternatives.
5. Identifying potential environmental effects of the proposed action and alternatives (i.e., direct, indirect, and cumulative effects and connected actions).
6. Determining potential cooperating agencies and task assignments.

The following lists the issues identified through initial scoping: (1) Effect of recreationists using the proposed trail on private property and residents of Goodyears Bar; (2) Potential increased risk of wildfire on the south side of the North Yuba River; (3) Prevention of illegal camping, fires, and occupancy, and enforcement of the motorized vehicle restriction; (4) Potential increase of traffic through Goodyears Bar; (5) Human and solid waste disposal at trail heads and along the trail; (6) Conflicts with mining interests; and (7) Goodyears Bar domestic drinking water quality degradation.

Organizations and individuals who may be interested in or affected by the decision will be solicited to identify other significant issues. Public participation has been previously solicited through mailing letters to private land owners, politicians, and county supervisors and through a previous environmental analysis and decision that was appealed. Continued participation will be emphasized through public meetings and mailings.

The draft EIS is expected to be filed with the Environmental Protection Agency (EPA) and to be available for public review approximately the beginning of March. The comment period on the draft EIS will be 45 days from the date the EPA publishes the notice of availability in the **Federal Register**.

The Forest Service believes, at this early stage, it is important to give reviewers notice of several court rulings related to public participation in the environmental review process. First, reviewers of draft environmental impact statements must structure their participation in the environmental review of the proposal so that it is meaningful and alerts an agency to the reviewer's position and contentions. *Vermont Yankee Nuclear Power Corp.* v. *NRDC*, 435 U.S. 519, 553 (1978). Also, environmental objections that could be raised at the draft EIS stage but that are not raised until after completion of the final EIS may be waived or dismissed by the courts. *City of Angoon* v. *Hodel*, 803 F.2d 1016, 1022 (9th Cir. 1986) and *Wisconsin Heritages Inc.* v. *Harris*, 490 F. Supp. 1334, 1338 (E.D. Wis. 1980). Because of these court rulings, it is very important that those interested in this proposed action participate by the close of the 45-day comment period so that substantive comments and objections are made available to the Forest Service at a time when it can meaningfully consider them and respond to them in the final EIS.

To assist the Forest Service in identifying and considering issues and concerns on the proposed action, comments on the draft EIS should be as specific as possible. It is also helpful if comments refer to specific pages or chapters of the draft EIS or the merits of the alternatives formulated and discussed in the statement. Reviewers may wish to refer to the Council on Environmental Quality Regulations for implementing the procedural provisions of the National Environmental Policy Act at 40 CFR 1503.3 in addressing these points.

The final EIS is expected to be available by May, 1994. The responsible official, who is the Downieville District Ranger, Tahoe National Forest, will document the decision and reasons for the decision in the Record of Decision.

Dated: December 9, 1993.

Jean M. Masquelier,

District Ranger.

[FR Doc. 93-30715 Filed 12-15-93; 8:45 am]

BILLING CODE 3410-11-M

Soil Conservation Service

Taylor Watershed, Dunn and Stark Counties, ND; Finding of No Significant Impact

AGENCY: Department of Agriculture, Soil Conservation Service.

ACTION: Notice of a finding of no significant impact.

SUMMARY: Pursuant to section 102(2)(c) of the National Environmental Policy Act of 1969; the Council on Environmental Quality Regulations (40 CFR part 1500); and the Soil Conservation Service Regulations (7 CFR part 650); the Soil Conservation Service, U.S. Department of Agriculture, gives notice that an environmental impact statement is not being prepared for the Taylor Watershed, Dunn and Stark Counties, North Dakota.

DATES: Comment Deadline—Janaury 14, 1994.

ADDRESSES: USDA Soil Conservation Service, 220 E. Rosser Avenue, Bismarck, ND 58501.

FOR FURTHER INFORMATION CONTACT: Ronnie L. Clark, State Conservationist, telephone 701-250-4421.

SUPPLEMENTARY INFORMATION: The environmental assessment of this federally assisted action indicates that the project will not cause significant local, regional, or national impacts on the environment. As a result of these findings, Ronnie L. Clark, State Conservationist, has determined that the preparation and review of an environmental impact statement are not needed for this project.

The project purpose is agricultural water supply. The planned works of improvement include: 601,800 feet of main and lateral rural water pipelines and an associated 58,500 feet of pasture pipelines, 28 livestock water tanks, 26,000 linear feet of fencing, and 1,500 acres of grass seeding.

The Notice of a Finding Of No Significant Impact (FONSI) has been forwarded to the Environmental Protection Agency and to various Federal, State, and local agencies and interested parties. A limited number of copies of the FONSI are available to fill single copy requests at the above address. Basic data developed during the environmental assessment are on file and may be reviewed by contacting Ronald D. Sando, Assistant State Conservationist (Water Resources), 701-250-4441.

No administrative action on implementation of the proposal will be taken until 30 days after the date of this publication in the **Federal Register**.

(This activity is listed in the Catalog of Federal Domestic Assistance under No. 10.904—Watershed Protection and Flood Prevention and is subject to the provisions of Executive Order 12372, which requires intergovernmental consultation with state and local officials)

Ronnie L. Clark,

State Conservationist.

[FR Doc. 93-30643 Filed 12-15-93; 8:45 am]

BILLING CODE 3410-16-M

DEPARTMENT OF COMMERCE

International Trade Administration

[A-421-805]

Preliminary Determination of Sales at Less Than Fair Value; Aramid Fiber Formed of Poly-Phenylene Terephthalamide From the Netherlands

AGENCY: Import Administration, International Trade Administration, Department of Commerce.

EFFECTIVE DATE: December 16, 1993.

FOR FURTHER INFORMATION CONTACT: Jennifer Katt or Jeffery Denning, Office of Antidumping Investigations, Import Administration, U.S. Department of Commerce, 14th Street and Constitution Avenue, NW., Washington, DC 20230; telephone (202) 482-0498 or 482-4194, respectively.

PRELIMINARY DETERMINATION: We preliminarily determine that aramid fiber formed of poly-phenylene terephthalamide (PPD-T aramid fiber) from the Netherlands is being, or is likely to be, sold in the United States at less than fair value, as provided in section 733 of the Tariff Act of 1930, as amended (the Act). The estimated margins are shown in the "Suspension of Liquidation" section of this notice.

Case History

Since the initiation of this investigation on July 22, 1993 (58 FR 40623, July 29, 1993), the following events have occurred.

On August 16, 1993, the U.S. International Trade Commission (ITC) issued an affirmative preliminary injury determination in this case (see No. 731-TA-652, 58 FR 44849).

On September 9, 1993, petitioner in this investigation, E.I. Du Pont de Nemours & Co., Inc. (Du Pont) amended the petition with submission of a revised allegation of sales below the cost of production. Based upon our analysis of this revised allegation, we found that there are reasonable grounds to believe or suspect that the respondent in this investigation, Aramide Maatachappij V.O.F. (Aramide) and Akzo Fibers, Inc. (the U.S. selling agent) (collectively Akzo) sold PPD-T aramid fiber in the home market at prices which were below the cost of production. Consequently, on September 17, 1993, the Department of Commerce (the Department) initiated a sales below cost investigation pursuant to section 773(b) of the Act. (See Memorandum from Team to Richard W. Moreland, dated September 17, 1993.)

In September 1993, the Department issued, and then Officials from the Department presented, an antidumping duty questionnaire, including Section D (cost of production/constructed value) to Akzo, the sole Dutch producer of subject merchandise during the period of investigation (POI).

On October 13, 1993, Akzo submitted its response to Section A of our questionnaire. Based upon our analysis of Akzo's home market and third country sales of subject merchandise, we determined that the home market was not viable for any of the three such or similar categories included in this investigation. (See "Such or Similar Comparisons" section of this notice, below.) We selected Germany as the third country market for sales of two such or similar categories (yarn and staple fiber); and Japan as the third country market for sales of the remaining such or similar category (pulp). (See Memorandum from Gary Taverman to Richard W. Moreland, dated October 28, 1993.) Additionally, we reanalyzed petitioner's sales below cost allegation in light of our determination that the home market was not viable, and determined that there was sufficient evidence on the record to continue our sales below cost investigation. (See Memorandum from Gary Taverman to Richard W. Moreland, dated October 26, 1993.)

Akzo submitted questionnaire responses (Sections B, C and D) in November 1993. Supplemental questionnaires were issued in November 1993.

On November 11, 1993, petitioner submitted a critical circumstances allegation, and thereafter we requested that Akzo provide data on all shipments of subject merchandise during prescribed periods. Because Akzo submitted information on imports into the United States, not shipments to the United States, we reiterated our earlier request on December 6, 1993, and on December 8, 1993, Akzo properly submitted the requested information.

Also in November, petitioner submitted a request that the Department clarify the published scope of this investigation regarding two products. During the same month Akzo submitted comments on this request. (See "Scope of the Investigation" section of this notice, below.)

Scope of the Investigation

The products covered by this investigation are all forms of poly para-phenylene terephthalamide aramid fiber from the Netherlands. This includes PPD-T aramid in the form of filament yarn (including single and corded), staple fiber, pulp (wet or dry), tire cord fabric, nonwovens, chopped fiber and floc. PPD-T aramid fiber is classifiable under subheadings 5402.10.3020, 5402.10.3040, 5402.32.3000, 5503.10.0000, 5601.30.0000 and 5902.10.00 of the *Harmonized Tariff Schedule of the United States* (HTSUS).

Akzo has argued that this investigation should involve at least three classes or kinds of merchandise: yarn, staple fiber and pulp. After considering extensive comments from both parties, we have preliminarily determined that the product covered by this investigation constitutes a single class or kind of merchandise, and three such or similar categories. (See Concurrence Memorandum, dated December 9, 1993, on file in room B-099 of the main building of the Department of Commerce (Concurrence Memorandum).) However, we are inviting additional comments from interested parties on this issue, to be included case and rebuttal briefs. (See "Public Comment" section of this notice, below.)

Since filing the petition, petitioner requested that we clarify that "tire cord" and "tire cord fabric" constructed of PPD-T aramid fiber are included within the scope of this investigation. Regarding tire cord constructed of PPD-T aramid fiber, there is no dispute that this product is included within the scope of this investigation. Regarding tire cord fabric constructed of PPD-T aramid fiber, we are preliminarily determining that this product is included within the scope of this investigation. (See Concurrence Memorandum) We are also inviting comments from interested parties on this issue, also to be included in case and rebuttal briefs. After considering all comments received, we will announce our final determination on this issue in our published final determination of this proceeding.

Period of Investigation

The period of investigation (POI) is January 1, 1993, through June 30, 1993.

Such or Similar Comparisons

We made fair value comparisons using the following such or similar categories: (1) Yarn; (2) staple fiber and; (3) pulp. Where there were no sales of identical merchandise in the relevant third country market to compare to U.S. sales, we made similar merchandise comparisons on the basis of the criteria defined in Appendix V to the antidumping duty questionnaire, on file in room B-099 of the main building of the Department of Commerce. In accordance with 19 CFR 353.58, we made comparisons at the same level of trade, where possible.

Critical Circumstances

Petitioner alleges that "critical circumstances" exist with respect to imports of PPD–T aramid fiber from the Netherlands. Pursuant to section 733(e)(1) of the Act and 19 CFR 353.16, we have analyzed the allegations using the Department's standard methodology. (See *Preliminary Determination of Critical Circumstances: Certain Cut-to-Length Carbon Steel Flat Products From Romania*, 58 FR 28550 (5/14/93).)

To determine whether there have been massive imports of PPD–T aramid fiber, we compared export volume for the four months subsequent to the filing of the petition to export volume for the four months prior to the filing of the petition, using shipment data submitted by Akzo and based upon the class-or-kind of merchandise under investigation.

We found that imports of PPD–T aramid fiber during the period subsequent to receipt of the petition did not increase by more than 15 percent. Since imports were not found to be massive, we do not consider whether or not importers had knowledge that subject merchandise was being sold at less than its fair value. Accordingly, we find that critical circumstances do not exist.

Fair Value Comparisons

To determine whether sales by Akzo of PPD–T aramid fiber from the Netherlands to the United States were made at less than fair value, we compared the United States price (USP) to the foreign market value (FMV), as specified in the "United States Price" and "Foreign Market Value" sections of this notice.

United States Price

All of Akzo's U.S. sales to the first unrelated purchaser took place after importation into the United states. Therefore, we based USP on exporter's sales prices (ESP), in accordance with section 772(c) of the Act.

We calculated Akzo's ESP sales based on packed, ex-U.S. warehouse and delivered prices to unrelated customers in the United States. We made deductions, where appropriate, for U.S. brokerage and handling, U.S. duty and customs fees, freight expenses and direct selling expenses including credit, technical services and warranty expenses. We deducted indirect selling expenses, including inventory carrying expenses and product liability expenses. For purposes of this preliminary determination, we have considered certain third party payments to be indirect selling expenses, and have deducted them accordingly.

We excluded from our analysis Akzo's U.S. sales of scrap merchandise because the quantity involved was insignificant. We also excluded one transaction involving further manufacturing in the United States and then immediate exportation because we do not have sufficient information to determine if this is a United States sale and because the quantity involved is insignificant. (See Concurrence Memorandum.)

We have not added to USP hypothetical taxes that were not collected by reason of exportation of the merchandise to the United States because such taxes are not included in the price of the such or similar merchandise sold to Japan or Germany, the third country markets that are the basis of foreign market value (FMV) in this investigation. Although consumption taxes were paid on sales to Japan, these were collected by the Japanese government, and not the Dutch government, which is the "country of exportation" in this investigation. Accordingly, we interpret section 772(d)(1)(c) of the Act as prohibiting us from increasing USP by the amount of taxes added to the price of sales to third countries since these taxes were not collected in the country of exportation.

Foreign Market Value

In order to determine whether there was a sufficient volume of sales in the home market to serve as a viable basis for calculating FMV, we compared the volume of home market sales of the subject merchandise to the volume of third country sales of subject merchandise, in accordance with section 773(a)(1)(B) of the Act. As noted above, we found that the home market was not viable for any of the three such or similar categories analyzed in this investigation. Consequently, we selected Germany as our third country market for sales of yarn and staple fiber, and Japan as our third country market for sales of pulp.

We excluded from our analysis, Akzo's German sales of second quality merchandise because Akzo has not explained why it would be appropriate to compare U.S. sales of first quality merchandise to third country sales of second quality merchandise. We also excluded a small number of sales which had value-added in Germany, and a single German consignment sale because we had a sufficient quantity of sales made directly to customers in Germany to serve as the basis for FMV. (See Concurrence Memorandum.)

Cost of Production

Based on petitioner's allegations, and in accordance with section 773(b) of the Act, the Department initiated investigations to determine whether Aramide made home market sales at prices below its cost of production (COP).

A. Calculation of COP

We calculated COP based on the sum of Aramide's cost of materials, fabrication, general expenses and third country packing. Additionally, we made the following adjustments to Aramide's submitted data for the preliminary determination:

1. We recalculated Aramide's interest expense based on Aramide's financial statements only;
2. We disallowed claimed fixed assets devaluation and thus increased its submitted depreciation accordingly; and
3. We increased the submitted fixed overhead expenses by adding back the interest portion of related party equipment leasing costs. (See Concurrence Memorandum for discussion of these adjustments.)

B. Test of Home Market Sale Prices

After calculating COP, we tested whether home market sales of PPD–T aramid fiber were made at prices below COP.

We compared model-specific COP to reported prices that were net of movement charges, discounts, and rebates. If over 90 percent of a respondent's sales of a given product were at prices above the COP, we did not disregard any below-cost sales because we determined that the respondent's below-cost sales were not made in substantial quantities. If between ten and 90 percent of a respondent's sales of a given product were at prices above the COP, we discarded only the below-cost sales if made over an extended period of time. Where we found that more than 90 percent of respondent's sales of a given product were at prices below the COP and were sold over an extended period of time, we disregarded all sales for that model and calculated FMV based on constructed value (CV).

In order to determine that below-cost sales were made over an extended period of time, we performed the following analysis on a product-specific basis: (1) If a respondent sold a product in only one month of the POI and there were sales in that month below the COP, or (2) if a respondent sold a product during two months or more of the POI and there were sales below the COP during two or more of those months, then below-cost sales were considered to have been made over an extended period of time.

C. Results of COP Test

We found that for certain models more than 90 percent of home market sales were at below-COP prices over an extended period of time. For U.S. sales left without a match as a result of disregarding these below COP sales, we based FMV on CV. Akzo provided no indication that the disregarded sales were at prices that would permit recovery of all costs within a reasonable period of time and in the normal course of trade.

D. Calculation of CV

We calculated CV based on the sum of Aramide's cost of materials, fabrication, general expenses and U.S. packing. We made the adjustments described above for COP, additionally we included an amount of imputed interest expense in the revised financing expense computation. In accordance with section 773(e)(1)(B) (i) and (ii) of the Act we: (1) Included the greater of Aramide's general expenses or the statutory minimum of ten percent of the cost of manufacture (COM), as appropriate and; (2) for profit, we used the statutory minimum of eight percent of the sum of COM and general expenses (because actual profit on home market sales was less than eight percent). Selling expenses (direct and, where appropriate, indirect) were calculated on a such or similar basis.

Price-to-Price Comparisons

For those products for which there were an adequate number of sales at prices above the COP, we based FMV on prices in a third country. We calculated FMV based on delivered prices, inclusive of packing, to unrelated customers.

We made adjustments, where appropriate, for physical differences in the merchandise, in accordance with 19 CFR 353.57.

Pursuant to section 773(a)(4)(B) and 19 CFR 353.56(a)(2), we deducted credit and warranty expenses incurred on the third country sales. In addition we made deductions, where appropriate, for discounts, rebates, inland freight, and inland insurance. We also deducted from FMV indirect selling expenses, including inventory carrying costs, product liability and, for German sales only, third party payments. The deduction for home market indirect selling expenses was capped by the sum of U.S. indirect selling expenses, in accordance with 19 CFR 353.56(b) (1) and (2). Furthermore, we deducted third country packing and added U.S. packing.

We did not include in third country price consumption taxes imposed by the Government of Japan. While the Court of Appeals in *Zenith Electronics Corp.* v. *United States*, 988 F.2d 1573 (CAFC 1993), rejected tax adjustments in home market FMV and required that such adjustments be made to USP—that holding is limited to situations in which the country of exportation (the home market) is the basis for FMV. Moreover, Zenith cannot be directing the Department to make an upward USP adjustment for third country consumption taxes because under section 772(d)(1)(C) of the Act, only taxes collected in the "country of exportation" can be adjusted for in the USP. The consumption taxes applied to the third country sales in this case, cannot be considered to be taxes imposed in the "country of exportation." (See "United States Price" discussion, above). Finally, being statutorily barred from making the USP adjustment, the Department cannot include the taxes in FMV either, because to do so could create a dumping margin even when pre-tax dumping is zero.

For the above stated reasons, the Department determines that it must exclude consumption taxes from third country FMV. (See Memo regarding Treatment of Third Country Consumption Taxes, dated December 2, 1993.)

Price to CV Comparisons

Where we compared Akzo's U.S. prices to CV, we deducted from FMV the weighted-average third country direct selling expenses on a such or similar basis. We also deducted weighted-average indirect selling expenses. This deduction was capped by the amount of U.S. indirect selling expenses, in accordance with 19 CFR 353.56(b) (1) and (2).

Currency Conversion

We made currency conversions based on the official exchange rates in effect on the dates of the U.S. sales as certified by the Federal Reserve Bank of New York.

Verification

As provided in section 776(b) of the Act, we will verify information that we determine is acceptable for use in making our final determination.

Suspension of Liquidation

In accordance with section 733(d)(1) of the Act, we are directing the Customs Service to suspend liquidation of all entries of PPD–T aramid fiber from the Netherlands that are entered, or withdrawn from warehouse, for consumption on or after the date of publication of this notice in the **Federal Register**. The Customs Service shall require a cash deposit or posting of a bond equal to the estimated preliminary dumping margins, as shown below. This suspension of liquidation will remain in effect until further notice. The less than fair value margins are as follows:

Producer/manufacturer/exporter	Weighted-average margin percentage
Akzo	47.28
All others	47.28

ITC Notification

In accordance with section 733(f) of the Act, we have notified the ITC of our determination. If our final determination is affirmative, the ITC will determine whether these imports are materially injuring, or threaten material injury to, the U.S. industry before the later of 120 days after the date of this preliminary determination or 45 days after our final determination.

Public Comment

Interested parties who wish to request a hearing must submit a written request to the Assistant Secretary for Import Administration, U.S. Department of Commerce, room B–099, within ten days of the publication of this notice. Requests should contain: (1) The party's name, address, and telephone number; (2) the number of participants; and (3) a list of the issues to be discussed.

In accordance with 19 CFR 353.38, case briefs or other written comments in at least ten copies must be submitted to the Assistant Secretary no later than January 27, 1994, and rebuttal briefs no later than February 1, 1994. A hearing, if requested, will be held on February 3, 1994, at 1 p.m. at the U.S. Department of Commerce in room 3708. Parties should confirm by telephone the time, date, and place of the hearing 48 hours prior to the scheduled time. In accordance with 19 CFR 353.38(b), oral presentations will be limited to issues raised in the briefs.

If this investigation proceeds normally, we will make our final determination not later than 75 days after the date of this preliminary determination.

This determination is published pursuant to section 733(f) of the Act and 19 CFR 353.15(a)(4).

Dated: December 9, 1993.

Barbara R. Stafford,

Acting Assistant Secretary for Import Administration.

[FR Doc. 93–30726 Filed 12–15–93; 8:45 am]

BILLING CODE 3510–DS–P

National Oceanic and Atmospheric Administration

Endangered Species; Permits

AGENCY: National Marine Fisheries Service (NMFS), NOAA, Commerce.

ACTION: Notice of receipt of an application from the U.S. Army Corps of Engineers for an enhancement permit (P504D).

Notice is hereby given that the U.S. Army Corps of Engineers (Corps), Walla Walla District has applied in due form for a permit to take endangered and threatened species for enhancement purposes, as authorized by the Endangered Species Act of 1973 (16 U.S.C. 1531–1543) and the National Marine Fisheries Service regulations governing endangered fish and wildlife permits (50 CFR parts 217–227).

The applicant requests authorization to collect and transport juvenile Snake River sockeye salmon (*Oncorhynchus nerka*) and juvenile Snake River spring/summer and fall chinook salmon (*O. tshawytscha*) around mainstem dams and associated downstream reservoirs on the lower Snake and lower Columbia Rivers for the purpose of increasing their chances of survival over the alternative of in-river passage, given current in-river conditions. Collection and transportation of juvenile salmon is projected to occur March 25 through October 31 at Lower Granite, Little Goose, and Lower Monumental dams, and March 25 through December 31 at McNary Dam. The requested duration of the permit is through December 31, 1998.

The Corps proposes to route the fish into holding tanks (raceways), sample tanks, or directly into barges. Fish routed into tanks will subsequently be loaded into trucks or barges for transportation to the Columbia River, below Bonneville Dam, without further handling except for those salmon sampled to gather data on species, size, and condition. These salmon may also be used for other smolt monitoring and research purposes, if such research is authorized. Adults of any of the three listed species that are collected incidental to transportation activities would be returned to the river without further handling.

Written data or views, or requests for a public hearing on this application should be submitted to the Director, Office of Protected Resources, National Marine Fisheries Service, 1335 East-West Hwy., Silver Spring, MD 20910, within 30 days of the publication of this notice. Those individuals requesting a hearing should set forth the specific reasons why a hearing on this particular application would be appropriate. The holding of such hearing is at the discretion of the Assistant Administrator for Fisheries. All statements and opinions contained in this application summary are those of the applicant and do not necessarily reflect the views of the National Marine Fisheries Service.

Documents submitted in connection with the above application are available for review by interested persons in the following offices by appointment:

Office of Protected Resources, National Marine Fisheries Service, 1335 East-West Hwy., Silver Spring, MD 20910 (301–713–2322); and

Environmental and Technical Services Division, National Marine Fisheries Service, 911 North East 11th Ave., room 620, Portland, OR 97232 (503–230–5400).

Dated: December 9, 1993.

William W. Fox, Jr.,

Director, Office of Protected Resources.

[FR Doc. 93–30644 Filed 12–15–93; 8:45 am]

BILLING CODE 3510–22–M

Endangered Species; Permits

AGENCY: National Marine Fisheries Service (NMFS), NOAA, Commerce.

ACTION: Issuance of a second modification to and receipt of a third modification request for Scientific Research Permit No. 726 (P45I) and receipt of a modification request for Scientific Research Permit No. 848 (P507D).

On March 22, 1991, Dr. Boyd Kynard, Northeast Anadromous Fish Research Center of the U.S. Fish and Wildlife Service was issued Permit No. 726 for scientific research on shortnose sturgeon (*Anipenser brevirostrum*) as authorized under the Endangered Species Act of 1974 (ESA) (16 U.S.C. 1531–1543) and the NMFS regulations governing listed fish and wildlife permits (50 CFR parts 217–227). On May 7, 1993, Dr. Kynard was issued Modification 1 to Permit No. 726. Notice is hereby given that on December 9, 1993, as authorized by the ESA, NMFS issued a second modification to Scientific Research Permit No. 726 for the purpose of extending the expiration date from December 31, 1993 to December 31, 1994. Also, notice is hereby given that Dr. Kynard has applied in due form for a third modification to Permit No. 726. Dr. Kynard requests authorization to: (1) Take an additional 15 adult shortnose sturgeon for radio-tagging and (2) take and preserve up to 500 drifting eggs or embryos (which may be alive or dead) to verify successful spawning at a site (when spawning is indicated by movements of radio-tagged fish).

Notice also is given that the Washington Department of Fisheries (WDF) has applied in due form for a modification to Scientific Research and Enhancement Permit No. 848 to take listed Snake River spring/summer chinook salmon (*Oncorhynchus tshawytscha*) as authorized by the ESA and the NMFS regulations governing listed fish and wildlife permits. Permit No. 848 was issued on May 26, 1993 (58 FR 32913) as authorized by the ESA and is valid through March 31, 1998. The modification would include releases of spring chinook salmon from the Lyons Ferry/Tucannon Fish Hatchery Complex for years 1994 through 1998.

Written data or views, or requests for a public hearing on these applications should be submitted to the Director, Office of Protected Resources (F/PR), National Marine Fisheries Service, 1335 East-West Hwy., Silver Spring, MD 20910, within 30 days of the publication of this notice. Those individuals requesting a hearing should set forth the specific reasons why a hearing on these particular applications would be appropriate. The holding of such hearing is at the discretion of the Assistant Administrator for Fisheries. All statements and opinions contained in these applications summaries are those of the Applicant and do not necessarily reflect the views of the National Marine Fisheries Service.

Documents submitted in connection with the above applications are available for review by interested persons in the following offices by appointment:

(For all requests)—Office of Protected Resources, National Marine Fisheries Service, 1335 East-West Hwy., Silver Spring, MD 20910, (301–713–2322);

(For P45I)—National Marine Fisheries Service, Northeast Region, One Blackburn Drive, Gloucester, MA 01930 (508–281–9250);

(For P507D)—Environmental and Technical Services Division, National Marine Fisheries Service, 911 North East 11th Ave., room 620. Portland, OR 97232 (503–230–5400).

Dated: December 9, 1993.

William W. Fox, Jr.,

Director, Office of Protected Resources.

[FR Doc. 93–30645 Filed 12–15–93; 8:45 am]

BILLING CODE 3510–22–M

Marine Mammals

AGENCY: National Marine Fisheries Service, NOAA, Commerce.

ACTION: Issuance of a Scientific Research Permit (P479).

SUMMARY: Notice is hereby given that Marsha Green, Ph.D., Albright College, P.O. Box 15234, Reading, PA 19612–5234, has been issued a permit to take humpback whales (*Megaptera novaeangliea*) for purposes of scientific research.

ADDRESSES: The permit and related documents are available for review upon written request or by appointment, in the following offices(s);

Permits Division, Office of Protected Resources, NMFS, East-West Highway, room 13130, Silver Spring, MD 20910 (301/713–2289);

Director, Southwest Region, NMFS, 501 W. Ocean Boulevard, suite 4200, Long Beach CA 90802–4213 (301/980–4016); and

Coordinator, Pacific Area Office, Southwest Region, NMFS, 2570 Dole Street, room 106, Honolulu, HI 96822–2396 (808/955–8831).

SUPPLEMENTARY INFORMATION: On September 20, 1993, notice was published in the **Federal Register** (58 FR 48851) that a request for a scientific research permit to take humpback whales (*Metaptera novaeangliae*) had been submitted by the above-named individual. The request permit has been issued, under the authority of the Marine Mammal Protection Act of 1972, as amended 16 U.S.C. 1361 *et seq.*), the Regulations Governing the Taking and Importing of Marine Mammals (50 CFR part 216), the Endangered Species Act (ESA) of 1973, as amended (16 U.S.C. 1531 *et seq.*), and the regulations governing the taking, importing, and exporting of endangered fish and wildlife (50 CFR part 222).

Issuance of this Permit as required by the ESA of 1973 was based on a finding that such Permit: (1) Was applied for in good faith; (2) will not operate to the disadvantage of the endangered species which is the subject of this permit; and (3) is consistent with the purposes and policies set forth in section 2 of the ESA.

Dated: December 9, 1993.

William W. Fox, Jr.,

Director, Office of Protected Resources, National Marine Fisheries Service.

[FR Doc. 93–30649 Filed 12–15–93; 8:45 am]

BILLING CODE 3510–22–M

DEPARTMENT OF DEFENSE

Office of the Secretary

Joint Advisory Committee on Nuclear Weapons Surety

ACTION: Notice of Advisory Committee Meeting.

SUMMARY: The Joint Advisory Committee (JAC) on Nuclear Weapons Surety will meet in closed session on January 11–12, 1994, in San Diego, California.

The Joint Advisory Committee is charged with advising the Secretary of Defense, Secretary of Energy, and the Joint Nuclear Weapons Council on nuclear weapons systems surety matters. At this meeting, the Joint Advisory Committee will receive classified briefings on loss of nuclear expertise in the Services, operational release procedures and environments impacting safety of nuclear weapons.

In accordance with the Federal Advisory Committee Act (Pub. L. 92–463, as amended, title 5, U.S.C. App. II, (1988)), this meeting concerns matters, sensitive to the interests of national security, listed in 5 U.S.C. 552b(c)(1) and accordingly this meeting will be closed to the public.

Dated: December 13, 1993.

L.M. Bynum,

Alternate OSD Federal Register Liaison Officer, Department of Defense.

[FR Doc. 93–30674 Filed 12–15–93; 8:45 am]

BILLING CODE 5000–04–M

Defense Advisory Committee on Service Academy Athletic Programs

ACTION: Notice.

Pursuant to Public Law 92–463, notice is hereby given that a meeting of the Defense Advisory Committee on Service Academy Athletic Programs is scheduled to be held February 1–3, 1994 from 8 a.m. to 5 p.m. The meeting will be held at the Crystal City Gateway Marriot Hotel, 1700 Jefferson Davis Highway, Arlington, Virginia. The purpose of the meeting is to review and finalize the Committee's report to Congress on the administration of athletic programs at the Service academies. Persons desiring to make oral presentations or submit written statements for consideration at the Committee meeting must contact Dr. Wayne S. Sellman, Director, Accession Policy, Office of the Assistant Secretary of Defense (Personnel and Readiness), room 2B271, The Pentagon, Washington, DC 20301–4000, telephone (703) 695–5525, no later than January 15, 1994.

Dated: December 13, 1993.

L.M. Bynum,

Alternate OSD Federal Register Liaison Officer, Department of Defense.

[FR Doc. 93–30675 Filed 12–15–93; 8:45 am]

BILLING CODE 5000–04–M

DEPARTMENT OF EDUCATION

[CFDA No. 84–239]

Foreign Language Materials Acquisition Program; Withdrawal of Notice Inviting Applications for New Awards for Fiscal Year (FY) 1994

SUMMARY: On July 30, 1993, a notice was published in the **Federal Register** (58 FR 40994) inviting applications for new awards under the Foreign Language Materials Acquisition Program (Library Services and Construction Act, Title V) for FY 1994. The Department of Education withdraws that notice because no funds are available to make new awards in FY 1994.

FOR FURTHER INFORMATION CONTACT: Nancy J. Cavanaugh, Program Officer, U.S. Department of Education, Discretionary Library Programs Division, 555 New Jersey Avenue, NW., room 404A, Washington, DC 20208–5571. Telephone: (202) 219–1309. Individuals who use a telecommunications device for the deaf (TDD) may call the Federal Information Relay Service (FIRS) at 1–800–877–8339 between 8 a.m. and 8 p.m., Eastern time, Monday through Friday.

Program Authority: 20 U.S.C. 371.

Dated: December 10, 1993.

Sharon P. Robinson,

Assistant Secretary for Educational Research and Improvement.

[FR Doc. 93–30617 Filed 12–15–93; 8:45 am]

BILLING CODE 4000–01–P

DEPARTMENT OF ENERGY

Availability of Draft Federal Report on Energy Facility Siting

AGENCY: Office of Policy, Planning and Program Evaluation, Department of Energy.

ACTION: Notice of availability for public comment.

SUMMARY: This notice announces the availability by the U.S. Department of Energy (DOE) of a draft report on energy facility siting *Energy Infrastructure of the United States and Projected Siting Needs: Scoping Ideas, Identifying Issues and Options; Draft Report of the*

Department of Energy Working Group on Energy Facility Siting to the Secretary for public comment. The purpose of the draft report is to address key issues impeding the siting of energy facilities. The report presents data and analysis regarding energy service needs, infrastructure requirements, and constraints to siting of energy facilities. The report also presents a series of potential initiatives to help improve the overall siting process for energy facilities. The draft report is accompanied by a second volume that provides documentation on the methodology used to conduct the analysis.

DATES: Individuals wishing to present their views on the draft report should do so in writing by February 28, 1994.

ADDRESSES: A copy of the draft report and the documentation summary is available for inspection and reproduction at the public reading room of the U.S. Department of Energy, Forrestal Building, 1000 Independence Ave., SW., Washington, DC. The public reading room is open from 9 a.m. to 4 p.m.; you may contact reading room staff at (202) 586–6020. If you wish to have a copy of the draft report mailed to you directly, please contact Dr. Barry Gale at the address below.

Four copies of the written comments should be addressed to Dr. Barry G. Gale, Office of Policy, Planning and Program Evaluation, U.S. Department of Energy, 1000 Independence Ave., SW., PO–63, Washington, DC 20585.

FOR FURTHER INFORMATION CONTACT: Dr. Barry G. Gale, Office of Policy, Planning and Program Evaluation, U.S. Department of Energy, 1000 Independence Ave., SW., PO–63, Washington, DC 20585, (202) 586–6708.

SUPPLEMENTARY INFORMATION: The U.S. Department is issuing this draft report and the accompanying documentation summary under the authority provided by the Department of Energy Organization Act. The draft report is the result of over a year-long effort by staff representing DOE's various subdivisions reflecting diverse expertise and knowledge. The report examines the anticipated need for expanding the nation's energy infrastructure, and issues related to that potential growth, based on projections of energy supply and demand developed by the Energy Information Administration, with the goal of developing appropriate policy direction for the Department.

The draft report is organized into five chapters. Chapter 1, the Introduction, discusses the importance of ameliorating problems in the energy facility siting process, particularly in light of Administration goals. Chapter 2 details anticipated increases in energy infrastructure requirements for the following areas: Mining and processing facilities; drilling and extraction facilities; electricity generation; liquid fuel processing and conversion facilities; transmission, distribution, and storage; offsite radioactive waste treatment and disposal; and additional facility needs for science and engineering, environmental clean-up and waste management, and defense production. Chapter 3 describes various constraints to siting of the types of facilities discussed in chapter 2, while chapter 4 expands on the implications of siting constraints for Administration goals. Chapter 5 presents a tentative list for consideration by stakeholders of ideas and initiatives that might beneficially impact the siting process.

Respondents are welcome to express their views on any aspects of the report. Areas which commenters might want to address include:

1. The report's scope and accuracy—does it correctly identify important future energy infrastructure needs; is there additional information to support the report's findings or other views?

2. Siting constraints and issues—does the draft report adequately identify and discuss the most important siting constraints and issues? If not, what should be added?

3. The proposed initiatives—are there any with which you disagree, and if so, why? Are there any that you strongly support, and if so, why? Are there others that are not included in the list?

The Department of Energy welcomes any suggestions related to the draft report and siting in general. This includes views about ways in which the Department, other federal agencies, and state and local government can improve the siting process.

Finally, the Department is open to suggestions for the design and conduct of effective stakeholder consultation processes on energy facility siting issues.

Issued in Washington, DC on December 1, 1993.

Susan F. Tierney,

Assistant Secretary for Policy, Planning and Program Evaluation.

[FR Doc. 93–30716 Filed 12–15–93; 8:45 am]

BILLING CODE 6450–01–M

Energy Research Financial Assistance Program Notice 94–03: Museum Education Program

AGENCY: U.S. Department of Energy (DOE).

ACTION: Notice inviting grant applications.

SUMMARY: The Office of University and Science Education Programs of the U.S. Department of Energy (DOE), in keeping with the energy-related mission of DOE, announces its interest in receiving Financial Assistance applications from museums that will support development of the media of informal energy-related science education. The media of informal science education include but are not limited to: Interactive exhibits, hands-on activities, and film/video productions. Examples of energy-related areas within the fundamental energy sciences include high energy and nuclear physics, nuclear science and technologies, global warming, waste management, energy efficiency, new materials development, fossil energy resources, renewable energy, health effects research including the human genome, emerging energy technologies, risk assessment, energy/environment, space exploration initiative, public science literacy, and other timely topics. The purpose of the program is to fund the development and use of creative informal science education media which focus on energy-related science and technology. However, under this program only new activities, i.e., exhibits, etc., will be considered for funding. Expansion of ongoing efforts is not acceptable.

For the purpose of this notice, "museum" means: An established nonprofit institution serving the public on a year-round basis, providing interactive exhibits, demonstrations, and informal educational programs designed to further public understanding of science and technology. The term also includes organizations referred to as science centers, science-technology centers and youth museums. Thus, museums, as defined in this document, are eligible to submit Financial Assistance applications.

DATES: Preapplications are to include an original and one copy and must be received by January 4, 1994. To permit timely consideration for award in Fiscal Year 1995, formal applications submitted in response to this notice should be received no later than 4:30 p.m., E.D.T., April 6, 1994.

ADDRESSES: Preapplications should be sent to the following address: Kasse Andrews-Weller, Program Manager, Office of University and Science Education Programs, U.S. Department of Energy, 1000 Independence Ave., SW., Washington, DC 20585. Completed formal applications referencing Program Notice 94–03 should be forwarded to:

U.S. Department of Energy, Office of Energy Research, Acquisition and Assistance Management Division, ER-64, room F-240, Washington, DC 20585, Attn: Program Notice 94-03. The following address must be used when submitting applications by U.S. Postal Service Express Mail, a commercial mail delivery service, or when handcarried by the applicant: U.S. Department of Energy, Office of Energy Research, Acquisition and Assistance Management Division, ER-64, 19901 Germantown Road, Germantown, Maryland 20874.

FOR FURTHER INFORMATION CONTACT: Kasse Andrews-Weller, Program Manager, Office of University and Science Education Programs, ET-32, U.S. Department of Energy, 1000 Independence Avenue, SW., Washington, DC 20585, (202) 586-8949.

SUPPLEMENTARY INFORMATION: The DOE is strongly committed to increasing the public's science literacy as well as increasing the number of students interested in science and technology careers. Projects which are designed to enhance public awareness of, and to encourage all young people to consider careers in, science and technology are strongly desired. While the application must be submitted by a museum, collaborative efforts are encouraged. Such efforts by potential applicants may include: Partnerships of several small museums, of a small and large museum, or of a history museum and youth museum in collaboration with museum organizations; and cooperative enterprises which utilize the scientific and technical expertise of the DOE laboratories, industry, and the broader educational community in conjunction with a museum.

As part of DOE's effort to promote public science literacy; enhance the Nation's mathematics, science, and engineering education; and fulfill the National Education Goal of "by the year 2000, U.S. students will be first in the world in science and mathematics achievements," eligibility for awards under this notice is restricted to U.S. museums which will offer informal energy-related science education. In accordance with 10 CFR 600.7(b)(1), this restriction is necessary to support established U.S. institutions which provide a valuable supplement to formal education. While this program anticipates awarding grants only from FY 1995 appropriations, the period of support of a grant may extend up to two years.

Before preparing a formal application, potential applicants are asked to submit a brief preapplication in accordance with 10 CFR 600.10(d) (2) and (3), which consists of no more than two pages of narrative describing the major project objectives and method of accomplishment to be utilized by the applicant to determine the effectiveness of the intended exhibit or media forum, dissemination plan, work schedule, and approximate cost of the project to DOE.

The purpose of the preapplication is to give the program staff the opportunity to determine the level and appropriateness of interest in the project or activity. The program staff will also look at the approach the museum is considering. Each museum will receive a written response to its preapplication. Once you have submitted a preapplication, however, you may submit a formal application, regardless of the written response to the preapplication. Telephone and telefax numbers are required to be part of the preapplication.

A formal application consists of an original and seven copies, a copy of the museum's Internal Revenue Service nonprofit determination letter, and other documents as stated in the Application Guide for the Office of Energy Research Financial Assistance Program.

No electronic submissions (including fax) of preapplications or formal applications under this Program Notice will be accepted.

This notice requests further that the "Detailed Description of Research Work Proposed" component of a complete grant application as established by 10 CFR part 605 should not exceed 15 double-spaced, typed pages. This project description should include: Conceptual design and how that design relates to the program objectives; description of how the impact of the project will be maximized (dissemination); identification of the target audience(s) the project will serve and efforts planned to serve that audience; identification of the mechanisms to be used to organize and manage the project, including the rules and responsibilities, financial and otherwise, of any partnerships; clarification of the monitoring and evaluation plan, including how those plans can be used for possible project modification; delineation of the planned outcomes and how these outcomes will be assessed and reported; and discussion of the anticipated significance of the exhibit and how this will be confirmed. In addition, formal applications need to include information that will provide the expected impact in terms of populations served and any evaluation plan.

General information about development and submission of applications, eligibility, limitations, evaluations and selection processes, and other policies and procedures are contained in the Application Guide for the Office of Energy Research Financial Assistance Program and 10 CFR part 605. Multiple applications are permissible; however, each application must be limited to a single project. The DOE expects to make several grants in FY 1995 to meet the objectives of this program. It is anticipated that $1 million will be the total funds available in FY 1995 subject to the availability of appropriated funds. Awards are expected to range from $10,000 to $200,000, with the number of awards determined by the number of fundable applications and the total amount of funds available for this program. The application guide is available from the U.S. Department of Energy, Museum Science Education Program, Office of University and Science Education Programs, ET-3, 1000 Independence Avenue, SW., Washington, DC 20585. Telephone requests may be made by calling (202) 586-8949.

The catalog of Federal Domestic Assistance Number for this program is 81.049.

Issued in Washington, DC, on November 24, 1993.

D.D. Mayhew,

Director, Office of Management, Office of Energy Research.

[FR Doc. 93-30717 Filed 12-15-93; 8:45 am]

BILLING CODE 6450-01-P

Economic Regulatory Administration

[Docket No. RO93-2-000]

Proposed Consent Order With Dane Energy Company

AGENCY: Economic Regulatory Administration, DOE.

ACTION: Final action on proposed consent order.

SUMMARY: The Department of Energy (DOE) has determined that a proposed Consent Order between DOE and Dane Energy Company, which was published for public comment in 58 FR 58157 (October 29, 1993), shall be made final. The Consent Order resolves matters relating to Dane's compliance with the federal petroleum price and allocation regulations for the period between December 1978 through December 1980. To resolve these matters, Dane will pay to DOE $870,000. Following receipt of the settlement monies, the Economic Regulatory Administration (ERA) will

petition DOE's Office of Hearings and Appeals to implement Special Refund Procedures pursuant to 10 CFR part 205, subpart V. Those procedures provide persons who claim to have suffered injury from the alleged overcharges with the opportunity to submit claims for payment.

FOR FURTHER INFORMATION CONTACT:

Dorothy Hamid, Economic Regulatory Administration, Department of Energy, GC-62, 820 First Street NE., Suite 810, Washington, DC 20585, (202) 523-3045.

SUPPLEMENTARY INFORMATION: On October 29, 1993, ERA published a Notice announcing a proposed Consent Order between DOE and Dane, which would resolve matters relating to its compliance with the federal petroleum price and allocation regulations for the period December 1978 through December 1980. 58 FR 58157. That Notice both summarized and contained the complete text of the proposed Consent Order, which requires Dane to pay to DOE $470,000 within thirty (30) days, and $400,000 within sixty (60) days, of the effective date of the Consent Order.

The October 29 Notice provided information regarding Dane's potential liability for violations of the anti-"layering" rule (10 CFR 212.186) and the anti-circumvention rules (10 CFR 205.202 and 210.62(c)) in connection with Dane's resales of crude oil at issue in a Remedial Order issued December 10, 1992. The Notice also detailed the considerations which underlay ERA's preliminary view that the settlement is favorable to the government and in the public interest. The Notice solicited written comments from the public relating to the terms and conditions of the settlement and whether the settlement should be made final. No comments were received.

Inasmuch as there are no bases proffered for rejecting or modifying the settlement as proposed, DOE has determined that it is in the best interest of the public to make the proposed Consent Order final without change. By this Notice, and pursuant to 10 CFR 205.199J, the proposed Consent Order between DOE and Dane is made a final Order of the Department of Energy, effective on the date of publication of this Notice in the **Federal Register**.

Issued in Washington, DC, on December 10, 1993.

Robert R. Nordhaus,

Acting Administrator, Economic Regulatory Administration, General Counsel.

[FR Doc. 93-30718 Filed 12-15-93; 8:45 am]

BILLING CODE 6450-01-M

Federal Energy Regulatory Commission

[Docket No. CP93-635-000]

Columbia Gas Transmission Corp.; Intent To Prepare an Environmental Assessment for the A-5 Replacement Project and Request for Comments on Its Scope

December 10, 1993.

The staff of the Federal Energy Regulatory Commission (FERC or Commission) will prepare an environmental assessment (EA) that will discuss environmental impacts of the construction and operation of the facilities proposed in the A-5 Replacement Project.[1]

Summary of the Proposed Project

Columbia wants Commission authorization to:

- Construct and operate 2.1 miles of 12-inch-diameter replacement pipeline needed to transport natural gas from east of Waywayanda Creek in Warwick Township, Orange County, New York to east of Iron Forge Road, also in Warwick Township; and
- Abandon by removal a similar length of 10-inch-diameter pipeline, except in a residential area which is avoided by a route deviation.[2]

The general location of these facilities is shown in appendix 1.[3]

Columbia wants to begin construction in May 1994 and have the replacement pipeline in service by the 1994 winter heating season.

Land Requirements for Construction

Most of the replacement pipeline would be built about 20 feet north of the existing 10-inch-diameter pipeline. A 957-foot-long section of the replacement pipeline would deviate from the existing right-of-way to avoid a residential area. Columbia would remove the existing pipeline after construction except for the area along the deviation and from beneath roads and Long House Creek.

The proposed replacement would require a 50- to 75-foot-wide construction right-of-way, depending on whether topsoil segregation is used in the area. The existing 50-foot-wide permanent right-of-way would shift 30 feet to the north to include the replacement pipeline. The 30 feet of the existing right-of-way not included in the revised permanent right-of-way would revert to the landowner along with the buried pipeline in places it is not removed.

The EA Process

The National Environmental Policy Act (NEPA) requires the Commission to take into account the environmental impacts that could result from an action whenever it considers the issuance of a Certificate of Public Convenience and Necessity. NEPA also requires us to discover and address concerns the public may have about proposals. We call this "scoping". The main goal of the scoping process is to focus the analysis in the EA on the important environmental issues. By the Notice of Intent, the Commission requests public comments on the scope of the issues it will address in the EA. All comments received are taken into account during the preparation of the EA.

The EA will discuss impacts that could occur as a result of the construction and operation of the proposed project under these general headings:

- Geology and soils
- Water resources, fisheries, and wetlands
- Vegetation and wildlife
- Endangered and threatened species
- Land use
- Cultural resources
- Hazardous waste

We will also evaluate possible alternatives to the proposed project or portions of the project, and make recommendations on how to lessen or avoid impact on the various resource areas.

Our independent analysis of the issues will be in the EA. Depending on the comments received during the scoping process, the EA may be published and mailed to Federal, state, and local agencies, public interest groups, interested individuals, affected landowners, newspapers, libraries, and the Commission's official service list for these proceedings. A comment period will be allotted for review if the EA is published. We will consider all comments on the EA before we recommend that the Commission approve or not approve the project.

[1] Columbia Gas Transmission Corporation's (Columbia) application was filed with the Commission under sections 7 (b) and (c) of the Natural Gas Act and part 157 of the Commission's regulations.

[2] The existing 10-inch-diameter pipeline has become physically deteriorated. It was installed in 1949 and is uncoated, bare steel pipeline.

[3] The appendices referenced in this notice are not being printed in the **Federal Register**. Copies are available from the Commission's Public Reference Branch, room 3104, 941 North Capitol Street, NE., Washington, DC 20426, or call (202) 208-1371. Copies of the appendices were sent to all those receiving this notice in the mail.

Currently Identified Environmental Issues

We have already identified several issues that we think deserve attention based on a preliminary review of the proposed facilities and the environmental information provided by Columbia. Keep in mind that this is a preliminary list; the list of issues will be added to, subtracted from, or changed based on your comments and our own analysis. Issues are:

- Construction of the new pipe would require a route deviation to avoid impact on a residential area.
- Construction would require expanding the existing right-of-way to install the new pipe before the existing line is abandoned by removal.
- The existing pipe would be abandoned in place in the residential area located east of Wisner Road.
- The existing pipe would require cleanup before it is abandoned in place or removed.[4]

Public Participation

You can make a difference by sending a letter with your specific comments or concerns about the project. You should focus on the potential environmental effects of the proposal, alternatives to the proposal (including alternative routes), and measures to avoid or lessen environmental impact. The more specific your comments, the more useful they will be. Please follow the instructions below to ensure that your comments are received and properly recorded:

- Address your letter to: Lois Cashell, Secretary, Federal Energy Regulatory Commission, 825 North Capitol St., NE., Washington, DC 20426;
- Reference Docket No. CP93–635–000;
- Send a copy of your letter to: Mr. Mark Jensen, EA Project Manager, Federal Energy Regulatory Commission, 825 North Capitol St., NE., room 7312, Washington, DC 20426; and
- Mail your comments so that they will be received in Washington, DC on or before January 10, 1994.

If you wish to receive a copy of the EA, you should request one from Mr. Jensen at the above address.

Becoming an Intervenor

In addition to involvement in the EA scoping process, you may want to become an official party to the proceeding or become an "intervenor". Among other things, intervenors have the right to receive copies of case-related Commission documents and filings by other intervenors. Likewise, each intervenor must provide copies of its filings to all other parties. If you want to become an intervenor you must file a Motion to Intervene according to rule 214 of the Commission's Rules of Practice and Procedure (18 CFR 385.214) attached as appendix 2.

Additional information about the proposed project is available from Mr. Mark Jensen, EA Project Manager, at (202) 208–1121.

Lois D. Cashell,

Secretary.

[FR Doc. 93–30634 Filed 12–15–93; 8:45 am]

BILLING CODE 6717–01–P

[4] Columbia would comply with the "Approval to Remove Natural Gas Pipeline Contaminated with Polychlorinated Biphenyls (PCBs) and Dispose of PCBs (Amended)" issued by the U.S. Environmental Protection Agency on March 1, 1993.

[Docket No. ER93–781–000]

Delano Energy Co., Inc.; Issuance of Order

December 9, 1993.

On July 8, July 23 and October 18, 1993, Delano Energy Company, Inc. (Delano) submitted for filing with the Commission a power sales agreement with Southern California Edison Company. Delano also requested waiver of various Commission regulations. In particular, Delano also requested that the Commission grant blanket approval under 18 CFR Part 34 of all future issuances of securities and assumptions of liability by Delano.

On November 29, 1993, pursuant to delegated authority, the Director, Division of Applications, Office of Electric Power Regulation, granted requests for blanket approval under 18 CFR Part 34, subject to the following:

Within thirty days of the date of this order, any person desiring to be heard or to protest the blanket approval of issuances of securities or assumptions of liability by Delano should file a motion to intervene or protest with the Federal Energy Regulatory Commission, 825 North Capitol Street, NE Washington, DC 20426, in accordance with Rules 211 and 214 of the Commission's Rules of Practice and Procedure (18 CFR 385.211 and 385.214).

Absent a request for hearing within this period, Delano is authorized to issue securities and assume obligations or liabilities as guarantor, indorser, surety, or otherwise in respect of any security of another person; provided that such issuance or assumption is for some lawful object within the corporate purposes of the applicant, and compatible with the public interest, and is reasonably necessary or appropriate for such purposes.

The Commission reserves the right to require a further showing that neither public or private interests will be adversely affected by continued approval of Delano's issuances of securities or assumptions of liability.

Notice is hereby given that the deadline for filing motions to intervene or protests, as set forth above, is December 29, 1993.

Copies of the full text of the order are available from the Commission's Public Reference Branch, room 3308, 941 North Capitol Street, NE. Washington, DC 20426.

Lois D. Cashell,

Secretary.

[FR Doc. 93–30635 Filed 12–15–93; 8:45 am]

BILLING CODE 6717–01–P

[Docket No. ER94–24–000]

Enron Power Marketing, Inc.; Issuance of Order

December 9, 1993.

Take notice that on December 2, 1993, the Commission issued an Order Accepting Rate Schedule as Modified, and Granting and Denying Waivers, in the above-docketed proceeding. On October 12, 1993, Enron Power Marketing, Inc. (Enron) filed an application in which it requested that the Commission:

(1) Accept and approve Enron's Rate Schedule No. 1 to become effective as of the date of filing;

(2) Grant blanket authorization for Enron to make wholesale sales of electric energy in interstate commerce at rates to be negotiated with the purchaser;

(3) Disclaim its jurisdiction over matters in which Enron serves as a broker;

(4) Waive the cost of service filing requirements of 18 CFR 35.12; and

(5) Grant such other waivers and authorizations as have been granted to other power marketers with certain exceptions.

The Commission's December 2, 1993 order in Order Paragraph's (D), (E), and (F) reads as follows:

(D) Within 30 days of the date of this order, any person desiring to be heard or to protest the Commission's blanket approval of issuances of securities or assumptions of liabilities by Enron should file a motion to intervene or protest with the Federal Energy Regulatory Commission, 825 North Capitol Street NE., Washington, DC 20426, in accordance with Rules 211 and 214 of the Commission's Rules of Practice and Procedure, 18 CFR 385.211 and 385.214.

(E) Absent a request for rehearing within the period set forth in Ordering Paragraph (D) above, Enron is authorized to issue securities and to assume obligations or liabilities as guarantor, endorser, surety or otherwise in respect of any security of another person; provided that such issue or assumption is for some lawful object within the corporate purposes of the applicant, compatible with the public interest, and reasonably necessary or appropriate for such purposes.

(F) The Commission reserves the right to modify this order and to require a further showing that neither public nor private interests will be adversely affected by continued Commission approval of Enron's issuance of securities or assumption of liabilities.

Notice is hereby given that the deadline for filing motions to intervene or protests, as set forth above, is January 3, 1994.

Copies of the full text of the order are available from the Commission's Public Reference Branch, room 3308, 941 North Capitol Street NE., Washington, DC 20426.

Lois D. Cashell,

Secretary.

[FR Doc. 93-30636 Filed 12-15-93; 8:45 am]

BILLING CODE 6717-01-P

[Docket No. CP93-145-001]

Tennessee Gas Pipeline Co.; Amendment

December 10, 1993.

Take notice that on December 3, 1993, Tennessee Gas Pipeline Company (Tennessee), P.O. Box 2511, Houston, Texas 77252, filed in Docket No. CP93-145-001, seeking to modify its original application, wherein Tennessee sought Commission authorization to provide a transportation service under part 157 of the Commission's regulations on behalf of Selkirk Cogen Partners, L.P. (Selkirk).

Specifically, Tennessee's current filing includes a Joint Stipulation and Agreement between Tennessee and Selkirk which modifies certain portions of the underlying application, including the proposed rate to be charged for the transportation, all as more fully set forth in the request that is on file with the Commission and open to inspection. The Commission construes this modification as constituting an amendment to the original request and is issuing this Notice of Amendment.

Any person desiring to be heard or to make any protest with reference to said petition should, on or before December 17, 1993, file with the Federal Energy Regulatory Commission (Commission), 825 North Capitol Street, NW., Washington, DC 20426, a petition to intervene or protest in accordance with the requirements of the Commission's Rules of Practice and Procedure (18 CFR 385.211 or 385.214) and the Regulations under the NGA (18 CFR 157.10). All protests filed with the Commission will be considered by it in determining the appropriate action to be taken but will not serve to make the protestants parties to the proceeding. Any person wishing to become a party to a proceeding or to participate as a party in any hearing therein must file a petition to intervene in accordance with the Commission's Rules. Any person who has heretofore filed need not file again.

Lois D. Cashell,

Secretary.

[FR Doc 93-30637 Filed 12-15-93; 8:45 am]

BILLING CODE 6717-01-M

[Docket No. GT94-13-000]

Texas Eastern Transmission Corp. Proposed Changes in FERC Gas Tariff

December 10, 1993.

Take notice that on December 7, 1993 Texas Eastern Transmission Corporation (Texas Eastern) submitted for filing as part of its FERC Gas Tariff, Sixth Revised Volume No. 1, the tariff sheets listed on Appendix A of the filing.

Texas Eastern states that this filing is submitted in light of the Commission's July 14, 1993 "Order on Compliance with Restructuring Rule" for Columbia Gas Transmission Corporation (Columbia) in Docket No. RS92-5 et al., (July 14 Order) and the Commission's June 18, 1993 "Order on Compliance With Restructuring Rule" for Granite State Gas Transmission, Inc. (Granite State) in Docket No. RS93-1 et al., (June 18, Order).

Texas Eastern states that it is filing the tariff sheets on Appendix A for the purpose of reflecting that, pursuant to the July 14 Order and the June 18 Order, certain customers of Columbia and Granite State became direct customers of Texas Eastern (Converting Customers) [1], effective November 1, 1993, by taking assignment of their respective service rights attributable to Columbia's and Granite State's service agreements as of October 31, 1993 with Texas Eastern under Texas Eastern's Rate Schedules CDS and FT-1.

Texas Eastern states that in order to reflect the decrease in Columbia's and Granite State's entitlements under their affected service agreements and to reflect the relevant entitlements of the Converting Customers, Texas Eastern is submitting Fourth Revised Sheet Nos. 546-548, 549-551, 553-555, 556-558, 560-562, 563-565, 567-569, 570-572, 575-577, 578-580, 581-583 and 599-601 and First Revised Sheet Nos. 548A, 551A, 555A, 558A, 562A, 565A, 569A, 572A, 577A, 580A, 583A and 601A to reflect modifications to sections 9.2, 9.3, 9.4, 9.5, 9.9 and 14.4 of the General Terms and Conditions of its FERC Gas Tariff, Sixth Revised Volume No. 1.

Texas Eastern states that in addition to the changes discussed above, Texas Eastern is submitting Fourth Revised Sheet Nos. 546, 547, 549, 550, 553, 554, 556, 557, 560, 561, 563, 564, 567, 568, 570, 571, 575, 576, 578, 579, 581, 582, 599 and 600 to reflect the modifications to Sections 9.2, 9.3, 9.4, 9.5, 9.9 and 14.4 of the General Terms and Conditions of its FERC Gas Tariff, Sixth Revised Volume No. 1 necessary to reflect a permanent reallocation of Base and Operational Segment Capacity Entitlements, pursuant to the Commission's Regulations [2] promulgated in Order No. 636-A [3], from Village of Cobden, Illinois; City of Grayville Public Utilities; and City of Jonesboro, Illinois to City of Kennett, Missouri and Indiana Gas Company under Texas Eastern's Rate Schedule SCT. All parties to the reallocation have agreed to the effective date of November 1, 1993. Further, Westport Natural Gas Company notified Texas Eastern that it has merged with and changed its name to Indiana Gas Company. Texas Eastern has reflected this change and combined its entitlements with those of Indiana Gas Company in this filing.

Texas Eastern states that in addition to the changes discussed above, Texas Eastern is submitting Fourth Revised Sheet Nos. 548, 551, 562, 569, 572, and 601 to reflect the modifications to sections 9.2, 9.4, 9.5 and 14.4 necessary to reflect a permanent capacity release transaction executed under Texas Eastern's Rate Schedule CDS. The Access Area release was from Public Service Electric & Gas to Philadelphia Electric Company to be effective November 1, 1993. Texas Eastern posted the capacity release transaction on the LINK® System in accordance with

[1] The Converting Customers from Columbia are Columbia Gas Company of Pennsylvania; Elizabethtown Gas Company; National Fuel Gas Distribution Company; New Jersey Natural Gas Company; New York State Electric and Gas Corporation; Penn Fuel Gas, Inc.; The Providence Gas Company and UGI Utilities, Inc. The Converting Customers from Granite State are Bay State Gas Company and Northern Utilities, Inc.

[2] 18 CFR 284.14(e).

[3] Order No. 636-A, 57 FR 36,128 (August 12, 1992), III FERC Stats. and Regs. Preambles ¶ 30,950 (August 3, 1992).

section 3.14 of Texas Eastern's General Terms and Conditions of its FERC Gas Tariff, Sixth Revised Volume No. 1.

Texas Eastern states that in addition to the changes discussed above, Texas Eastern is submitting Fourth Revised Sheet Nos. 546, 549, 553, 556, 560, 563, 567, 570, 575, 578, 581 and 599 and First Revised Sheet Nos. 548A, 551A, 555A, 558A, 562A, 565A, 569A, 572A, 577A, 580A, 583A and 601A to reflect the modifications to sections 9.2, 9.3, 9.4, 9.5, 9.9 and 14.4 necessary to reflect the termination of an executed service agreement with Central Illinois Public Service Company and the scheduled reduction in quantities for Texas Gas Transmission Corporation under Texas Eastern's Rate Schedule FT-1. Texas Eastern posted this available capacity on the LINK® System in accordance with sections 2 and 3.14 of Texas Eastern's General Terms and Conditions of its FERC Gas Tariff, Sixth Revised Volume No. 1 and is representing this capacity, available November 1, 1993, as "Available Firm" on the tariff sheets.

Texas Eastern states that upon receipt of all executed service agreements from the Converting Customers, Texas Eastern will file with the Commission such executed service agreements and update the Index of Firm Customers contained in its FERC Gas Tariff, Sixth Revised Volume No. 1.

The proposed effective date of the tariff sheets is November 1, 1993, the effective date of assignment of Columbia's and Granite State's entitlements to the respective Converting Customers. Copies of the filing were served on firm customers of Texas Eastern and interested state commissions.

Any person desiring to be heard or to protest said filing should file a motion to intervene or protest with the Federal Energy Regulatory Commission, 825 North Capitol Street, NE., Washington, DC 20426, in accordance with Rules 211 and 214 of the Commission's Rules of Practice and Procedure. All such motions or protests should be filed on or before December 17, 1993. Protests will be considered by the Commission in determining the appropriate action to be taken, but will not serve to make protestants parties to the proceeding. Any person wishing to become a party must file a motion to intervene. Copies of this filing are on file with the Commission and are available for public inspection.

Lois D. Cashell,

Secretary.

[FR Doc. 93-30638 Filed 12-15-93; 8:45 am]

BILLING CODE 6717-01-M

ENVIRONMENTAL PROTECTION AGENCY

[FRL-4813-8]

Agency Information Collection Activities Under OMB Review

AGENCY: Environmental Protection Agency (EPA).

ACTION: Notice.

SUMMARY: In compliance with the Paperwork Reduction Act (44 U.S.C. 3501 *et seq.*), this notice announces that the Information Collection Request (ICR) abstracted below has been forwarded to the Office of Management and Budget (OMB) for review and comment. The ICR describes the nature of the information collection and its expected cost and burden.

DATES: Comments must be submitted on or before January 18, 1994.

FOR FURTHER INFORMATION CONTACT: For further information or to obtain a copy of this ICR contact Sandy Farmer at EPA, (202) 260-2740.

SUPPLEMENTARY INFORMATION:

Office of the Administrator

Title: Small Community Survey (EPA ICR No. 1670.01).

Abstract: This is a new information collection to assist the EPA in performing economic and regulatory analyses as required by the Regulatory Flexibility Act (RFA) of 1980. The purpose of this voluntary survey is to gather accurate, cross-media regulatory and economic data from small communities, thereby addressing RFA goals to:

(1) Increase agency awareness and understanding of the impacts of regulations on small communities;

(2) Establish a mechanism whereby policy makers are provided with information about regulatory options and their implications for small communities; and

(3) Encourage agencies to use flexibility in regulating small communities.

The survey target population will be drawn from general purpose governments of U.S. communities (counties, municipalities, and townships) with populations of less than 50,000 persons, as described in the Census Bureau's 1992 Census of Governments. Official representatives (e.g. mayors, city managers) of those communities selected for the survey will receive a survey questionnaire through the mail and will be asked to provide information that includes:

(1) Sources of information the community uses to learn about environmental regulations;

(2) Facilities and activities associated with environmental quality;

(3) Community activities with regard to various EPA programs (such as pollution prevention, wastewater treatment, community right-to-know);

(4) Community funding sources and uses;

(5) Land use planning; and

(6) Contacts for additional information.

The EPA will enter the information from completed surveys into a computerized database and perform analyses to identify trends and characteristics of the sampled population.

Burden Statement: Public reporting burden for respondents is estimated to range between 20 to 30 minutes per response with an average of 25 minutes per response, including time for reviewing instructions, gathering and compiling the data needed, and completing and reviewing the survey questionnaire.

Respondents: Official representatives of communities with populations less than 50,000.

Estimated No. of Respondents: 2755.

Estimated Responses per Respondent: 1.

Frequency of Collection: One-time.

Estimated Total Annual Burden on Respondents: 1148 hours.

Send comments regarding the burden estimate, or any other aspect of this collection of information, including suggestions for reducing the burden to:

Sandy Farmer, U.S.Environmental Protection Agency, Information Policy Branch (2136), 401 M Street, SW., Washington, DC 20460.

and

Timothy Hunt, Office of Management and Budget, Office of Information and Regulatory Affairs, 725 17th Street, NW., Washington, DC 20503.

Dated: December 9, 1993.

Paul Lapsley,

Director, Regulatory Management Division.

[FR Doc. 93-30700 Filed 12-15-93; 8:45 am]

BILLING CODE 6560-50-F

[OPP-100133; FRL-4749-1]

Aptus, Inc. Subsidiary of Westinghouse Environmental Services; Transfer of Data

AGENCY: Environmental Protection Agency (EPA).

ACTION: Notice.

SUMMARY: This is a notice to certain persons who have submitted information to EPA in connection with

pesticide information requirements imposed under the Federal Insecticide, Fungicide, and Rodenticide Act (FIFRA) and the Federal Food, Drug, and Cosmetic Act (FFDCA). Aptus, Inc., a subsidiary of Westinghouse Environmental Services, is about to be awarded a contract to perform work for the EPA Office of Pesticide Programs (OPP), and will be provided access to certain information submitted to EPA under FIFRA and the FFDCA upon award of this contract. Some of this information may have been claimed to be confidential business information (CBI) by submitters. This information will be transferred to Aptus, Inc. consistent with the requirements of 40 CFR 2.307(h)(3) and 40 CFR 2.308(i)(2), and will enable Aptus, Inc. to fulfill the obligations of the contract.

DATES: Aptus, Inc. will be given access to this information only after award of the contract on or about December 1, 1993 .

FOR FURTHER INFORMATION CONTACT: By mail: BeWanda B. Alexander, Program Management and Support Division (7502C), Office of Pesticide Programs, Environmental Protection Agency, 401 M St., SW., Washington, DC 20460. Office location and telephone number: Rm. 234, Crystal Mall 2, 1921 Jefferson Davis Highway, Arlington, VA, (703) 305–5259.

SUPPLEMENTARY INFORMATION: Under Solicitation Number D301348M1, Aptus, Inc. will assist OPP to incinerate approximately 400 formulas of pesticide products containing the chemicals 2,4,5-T or 2,4,5-TP. To safely destroy products that contain these chemicals, Aptus, Inc. will need to know the other ingredients.

OPP has determined that the contract herein described involves work that is being conducted in connection with FIFRA and that access by Aptus, Inc. to information on certain pesticide products containing 2,4,5-T and 2,4,5-TP is necessary for the performance of this contract. Some of this information may be entitled to confidential treatment. The information has been submitted to EPA under sections 3, 4, 6, 7, and 17 of FIFRA and under sections 408 and 409 of the FFDCA.

In accordance with the requirements of 40 CFR 2.37(h)(3), the contract with Aptus, Inc., prohibits use of the information for any purpose not specified in the contract; prohibits disclosure of the information in any form to a third party without prior written approval from the Agency; and requires that each official and employee of the contractor sign an agreement to protect the information from unauthorized release and to handle it in accordance with the FIFRA Information Security Manual. In addition, Aptus, Inc. is required to submit for EPA approval a security plan under which any CBI will be secured and protected against unauthorized release or compromise. No information will be provided to this contractor until the above requirements have been fully satisfied. Records of information provided to this contractor will be maintained by the Project Officer for this contract in OPP. All information supplied to Aptus, Inc. by EPA for use in connection with this contract will be returned to EPA when Aptus, Inc. has completed its work.

List of Subjects

Environmental protection, Transfer of data.

Dated: December 7, 1993.

Susan H. Wayland,

Acting Director, Office of Pesticide Programs.

[FR Doc. 93–30697 Filed 12–15–93; 8:45 am]

BILLING CODE 6560–50–F

[OPP–100134; FRL–4749–2]

NCI Information Systems, Inc.; Transfer of Data

AGENCY: Environmental Protection Agency (EPA).

ACTION: Notice.

SUMMARY: This is a notice to certain persons who have submitted information to EPA in connection with pesticide information requirements imposed under the Federal Insecticide, Fungicide, and Rodenticide Act (FIFRA) and the Federal Food, Drug, and Cosmetic Act (FFDCA). NCI Information Systems, Inc. (NCI) has been awarded a contract to perform work for the EPA Office of Pesticide Programs (OPP), and will be provided access to certain information submitted to EPA under FIFRA and the FFDCA. Some of this information may have been claimed to be confidential business information (CBI) by submitters. This information will be transferred to NCI consistent with the requirements of 40 CFR 2.307(h)(3) and 40 CFR 2.308(i)(2), and will enable NCI to fulfill the obligations of the contract.

DATES: NCI will be given access to this information no sooner than December 21, 1993.

FOR FURTHER INFORMATION CONTACT: By mail: BeWanda B. Alexander, Program Management and Support Division (7502C), Office of Pesticide Programs, Environmental Protection Agency, 401 M St., SW., Washington, DC 20460. Office location and telephone number: Rm. 234, Crystal Mall 2, 1921 Jefferson Davis Highway, Arlington, VA, (703) 305–5259.

SUPPLEMENTARY INFORMATION: Under Contract Number 68–D3–0088, NCI will assist OPP in the tracking and preliminary screening of label amendments submitted by registrants in response to the Worker Protection Standard labeling requirements. In conducting the preliminary screening, NCI may be required to have access to the identity of the solvents in a product to check the apropriateness of the personal protective equipment listed on a proposed label against chemical-resistance categories described in Pesticide Regulation Notice 93.7. This contract involves no subcontractors.

OPP has determined that the contract herein described involves work that is being conducted in connection with FIFRA and that access by NCI to information on all pesticide products is necessary for the performance of this contract. Some of this information may be entitled to confidential treatment. The information has been submitted to EPA under sections 3, 4, 6, 7, and 17 of FIFRA and under sections 408 and 409 of the FFDCA.

In accordance with the requirements of 40 CFR 2.37(h)(3), the contract with NCI, prohibits use of the information for any purpose not specified in the contract; prohibits disclosure of the information in any form to a third party without prior written approval from the Agency; and requires that each official and employee of the contractor sign an agreement to protect the information from unauthorized release and to handle it in accordance with the FIFRA Information Security Manual. In addition, NCI is required to submit for EPA approval a security plan under which any CBI will be secured and protected against unauthorized release or compromise. No information will be provided to this contractor until the above requirements have been fully satisfied. Records of information provided to this contractor will be maintained by the Project Officer for this contract in OPP. All information supplied to NCI by EPA for use in connection with this contract will be returned to EPA when NCI has completed its work.

List of Subjects

Environmental protection, Transfer of data.

Dated: December 7, 1993.

Susan H. Wayland,

Acting Director, Office of Pesticide Programs.

[FR Doc. 93-30698 Filed 12-15-93; 8:45 am]

BILLING CODE 6560-50-F

[FRL-4814-7]

Final Maximum Pressures for Rule-Authorized Enhanced Recovery Injection Wells in Michigan—Third Group Fields

AGENCY: Environmental Protection Agency.

ACTION: Notice of final maximum injection pressure in fields with rule-authorized enhanced recovery injection wells in Michigan—third group fields.

SUMMARY: The United States Environmental Protection Agency (USEPA or Agency) today is issuing pressure gradients for calculating the maximum allowable liquid injection pressure for rule-authorized Class II enhanced recovery injection wells in nine Michigan fields currently approved by the State of Michigan for enhanced recovery operations. Therefore, as of the date of publication of this notice, operators of rule-authorized enhanced recovery wells in the nine fields must limit their liquid injection pressure as directed in this notice. This notice now becomes part of the applicable Underground Injection Control program for the State of Michigan, administered by Region 5 of USEPA, promulgated under the provisions of the Safe Drinking Water Act.

FOR FURTHER INFORMATION CONTACT: Patrick Saieh, Underground Injection Control Section, Water Division, (312) 886-4240, 17th floor Metcalfe Building (WD-17J), 77 West Jackson Boulevard, Chicago, Illinois 60604-3590.

SUPPLEMENTARY INFORMATION:

I. Background

Federal regulations at 40 CFR 147.1154 stipulate that the Regional Administrator shall establish maximum injection pressures ("field rules") for rule-authorized enhanced recovery injection wells in Michigan fields, after proper notice and opportunity for public comment. Notice was given on October 26, 1993, in the **Federal Register** (58 FR 57598) and on November 1, 1993, to persons on a state-wide mailing list. The public notice period ended December 1, 1993.

II. Final Maximum Pressures

In this final notice, USEPA is announcing that rule-authorized, enhanced recovery, injection wells in the Michigan fields listed in Table 1, must operate below a maximum injection pressure for liquids calculated using the following formula:

$$Pm=(FPG - 0.433\ Sg)d$$

where

Pm=injection pressure at the wellhead (psi)

FPG=fracture pressure gradient from Table 1 (psi/ft)

Sg=specific gravity of the injection fluid (dimensionless)

d=depth to top of injection zone (ft)

III. Alternative Maximum Pressures

If an owner or operator wishes to inject at a pressure higher than that calculated using the above formula, he or she may submit a request that the USEPA establish an alternative maximum pressure for a particular field and formation. This request may result in permission to inject at higher pressures if the operator can demonstrate to the satisfaction of the Agency that the desired injection pressure will not fracture the confining layer adjacent to the lowermost Underground Source of Drinking Water (USDW) and that there will be no migration of fluids into a USDW. The Agency may grant such a request after notice and opportunity for public comment, according to the provisions of 40 CFR part 124.

If a request for an Alternative Maximum Pressure is denied, the owner or operator may apply for a UIC permit under 40 CFR 144.25(c). The final permit decision, including permit conditions which the owner or operator considers to be inappropriate, may be subject to administrative review pursuant to 40 CFR 124.19. To be added to a mailing list to receive notice of Agency decisions in Michigan regarding Alternative Maximum Pressures or Class IIR permits, contact USEPA, Region 5 Underground Injection Control Section at the address given above.

IV. Notice to Owners and Operators

Concurrent with publication of this notice, USEPA is sending certified written notices to owners and operators of wells in affected fields informing them of the applicable formula to be used in determining the maximum allowable liquid injection pressure. After receipt of this notice, owners and operators who exceed the injection pressure established under the formula or the alternative maximum pressure approved by USEPA will be considered in violation of 40 CFR 147.1154(a), and may be subject to enforcement action, including the assessment of civil penalties and the issuance of compliance orders. If an owner or operator does not receive a certified written notice from USEPA within thirty (30) days of the date of this notice, he or she should immediately contact USEPA, Region 5 at the telephone number given above, to avoid the possibility of violating UIC regulations.

Dated: December 6, 1993.

Dale S. Bryson,

Director, Water Division, Region 5, U.S. Environmental Protection Agency.

TABLE 1.—FRACTURE PRESSURE GRADIENT VALUES

Field	Formation	County	Township/range/section	FPG (psi/ft)
Bear Lake	Niagaran	Manistee	T23N,R15W,S12	0.58
Beaverton	Dundee	Gladwin	T17N,R2W,S19	1.11
Falmouth	Richfield	Missaukee	T22N,R6W,S30,31 and T22N,R7W,S25,36	1.10
Grout	Richfield	Gladwin	T18N,R2W,S10,11,14,15	1.05
Kawkawlin	Dundee	Bay	T15N,R4E,S27,28,33,34 and T14N,R4E,S3	1.23
Onondaga 21A	A-1 Carbonate (Salina)	Ingham	T1N,R2W,S15-17,21,22	0.81
Richfield	Richfield	Lapeer	T10N,R10E,S21-23,26-28,33-35	1.09
West Branch 28	Dundee	Ogemaw	T22N,R2E,S28,S/2 of NW/4	1.25
North Wise	Dundee	Isabella	T16N,R3W,S17	1.12

[FR Doc. 93–30699 Filed 12–15–93; 8:45 am]
BILLING CODE 6560–50–P

FEDERAL COMMUNICATIONS COMMISSION

[DA 93–1482]

Comments Invited On Hawaii Public Safety Plan Amendment

December 9, 1993.

On June 2, 1993, the Commission accepted the Public Safety Plan for Hawaii (Region 11). On November 23, 1993, Region 11 submitted a proposed amendment to its plan that would revise the current channel allotments. Because the proposed amendment is a major change to the Region 11 plan, the Commission is soliciting comments from the public before taking action. (See Report and Order, General Docket No. 87–112, 3 FCC Rcd 905 (1987), at paragraph 57.)

Interested parties may file comments to the proposed amendment on or before January 18, 1994 and reply comments on or before February 2, 1994. Commenters should send an original and five copies of comments to the Secretary, Federal Communications Commission, Washington, DC 20554 and should clearly identify them as submissions to PR Docket 93–80 Hawaii Public Safety Region 11.

Questions regarding this public notice may be directed to Betty Woolford, Private Radio Bureau, (202) 632–6497 or Ray LaForge, Office of Engineering and Technology, (202) 653–8112.

Federal Communications Commission.

William F. Caton,

Acting Secretary.

[FR Doc. 93–30684 Filed 12–15–93; 8:45 am]
BILLING CODE 6712–01–M

[DA 93–1481]

Comments Invited on Washington, DC Metropolitan Area Public Safety Plan Amendment

December 9, 1993.

On March 26, 1990, the Commission accepted the Public Safety Plan for the Washington, DC Metropolitan area (Region 20). On November 24, 1993, Region 20 submitted a proposed amendment to its plan to give the Regional Plan Review Committee authority to reallocate its 13 intraregional interoperability channels, except channel 792, to general pool assignment. The flexibility to include these frequencies in the general pool assignment may allow a greater number of current and future application requests to be met. Because the proposed amendment is a major change to the Region 20 plan, the Commission is soliciting comments from the public before taking action. (See Report and Order, General Docket No. 87–112, 3 FCC Rcd 905 (1987), at paragraph 57.)

Interested parties may file comments to the proposed amendment on or before January 18, 1994 and reply comments on or before February 2, 1994. Commenters should send an original and five copies of comments to the Secretary, Federal Communications Commission, Washington, DC 20554 and should clearly identify them as submissions to Gen. Docket 90–7 Washington, DC Metropolitan Area-Public Safety Region 20.

Questions regarding this public notice may be directed to Betty Woolford, Private Radio Bureau, (202) 632–6497 or Ray LaForge, Office of Engineering and Technology, (202) 653–8112.

Federal Communications Commission.

William F. Caton,

Acting Secretary.

[FR Doc. 93–30685 Filed 12–15–93; 8:45 am]
BILLING CODE 6712–01–M

FEDERAL RESERVE SYSTEM

Formation of, Acquisition by, or Merger of Bank Holding Companies; Donald L. Sturm

The company listed in this notice has applied for the Board's approval under section 3 of the Bank Holding Company Act (12 U.S.C. 1842) and § 225.14 of the Board's Regulation Y (12 CFR 225.24) to become a bank holding company or to acquire a bank or bank holding company. The factors that are considered in acting on the applications are set forth in section 3(c) of the Act (12 U.S.C. 1842(c)).

The application is available for immediate inspection at the Federal Reserve Bank indicated. Once the application has been accepted for processing, it will also be available for inspection at the offices of the Board of Governors. Interested persons may express their views in writing to the Reserve Bank indicated for that application or to the offices of the Board of Governors. Any comment on an application that requests a hearing must include a statement of why a written presentation would not suffice in lieu of a hearing, identifying specifically any questions of fact that are in dispute and summarizing the evidence that would be presented at a hearing.

Comments regarding this application must be received not later than December 27, 1993.

A. Federal Reserve Bank of Kansas City (John E. Yorke, Senior Vice President) 925 Grand Avenue, Kansas City, Missouri 64198:

1. *Donald L. Sturm*, Omaha, Nebraska; to acquire 100 percent of the voting shares of Country Hill Bank, Lenexa, Kansas.

Board of Governors of the Federal Reserve System, December 14, 1994.

Jennifer J. Johnson,

Associate Secretary of the Board.

[FR Doc. 93–30882 Filed 12–15–93; 8:45 am]
BILLING CODE 6210–01–M

FEDERAL TRADE COMMISSION

[File No. 931 0138]

Alvey Holdings, Inc., et al.; Proposed Consent Agreement With Analysis To Aid Public Comment

AGENCY: Federal Trade Commission.

ACTION: Proposed consent agreement.

SUMMARY: In settlement of alleged violations of Federal law prohibiting unfair acts and practices and unfair methods of competition, this consent agreement, accepted subject to final Commission approval, would require, among other things, a Missouri-based corporation and its subsidiary to divest, to a Commission-approved buyer, its own horizontal carousel business within six months of acquiring White Storage & Retrieval Systems, Inc., or else agree to have a Commission-appointed trustee complete the divestiture. In addition, the respondents would be required to comply with all the terms of a Hold Separate Agreement, and would be prohibited, for a period of ten years, from acquiring, without prior Commission approval, any interest in any entity engaged in the manufacture or sale of horizontal carousels in the United States within the previous two years.

DATES: Comments must be received on or before February 14, 1994.

ADDRESSES: Comments should be directed to: FTC/Office of the Secretary, room 159, 6th St. and Pa. Ave., NW., Washington, DC 20580.

FOR FURTHER INFORMATION CONTACT: M. Howard Morse, FTC/S–3304, Washington, DC 20580. (202) 326–2949.

SUPPLEMENTARY INFORMATION: Pursuant to section 6(f) of the Federal Trade Commission Act, 38 Stat. 721, 15 U.S.C. 46 and § 2.34 of the Commission's Rules of Practice (16 CFR 2.34), notice is hereby given that the following consent agreement containing a consent order to cease and desist, having been filed with

and accepted, subject to final approval, by the Commission, has been placed on the public record for a period of sixty (60) days. Public comment is invited. Such comments or views will be considered by the Commission and will be available for inspection and copying at its principal office in accordance with § 4.9(b)(6)(ii) of the Commission's Rules of Practice (16 CFR 4.9(b)(6)(ii)).

Agreement Containing Consent Order

In the Matter of Alvey Holdings, Inc., a corporation, and Alvey, Inc., a corporation.

The Federal Trade Commission ("Commission") having initiated an investigation of the proposed acquisition by Alvey, Inc., a wholly-owned subsidiary of Alvey Holdings, Inc. (collectively "Alvey" or "proposed respondents"), of the stock of White Storage & Retrieval Systems, Inc. ("White"), a New Jersey corporation, and it now appearing that the proposed respondents are willing to enter into an Agreement Containing Consent Order ("Agreement") to divest certain assets, and to provide for certain other relief,

It is hereby agreed by and between Alvey, by its duly authorized officers and its attorneys, and counsel for the Commission that:

1. Proposed respondent Alvey Holdings, Inc. is a corporation duly organized, existing, and doing business under and by virtue of the laws of the State of Delaware.

2. Proposed respondent Alvey, Inc. is a corporation which is a wholly-owned subsidiary of Alvey Holdings, Inc., and is a corporation duly organized, existing, and doing business under and by virtue of the laws of the State of Missouri. Both Alvey Holdings, Inc. and Alvey, Inc. have their principal places of business located at 9301 Olive Boulevard, St. Louis, Missouri 63137.

3. White Storage & Retrieval Systems, Inc., is a corporation organized, existing, and doing business under and by virtue of the laws of the State of New Jersey, with its principal place of business located at 30 Boright Avenue, Kenilworth, New Jersey 07033.

4. Proposed respondents admit all of the jurisdictional facts set forth in the draft Complaint here attached.

5. Proposed respondents waive:

(a) Any further procedural steps;

(b) The requirement that the Commission's decision contain a statement of findings of fact and conclusion of law;

(c) All rights to seek judicial review or otherwise to challenge or contest the validity of the Order entered pursuant to this Agreement; and

(d) Any claim under the Equal Access to Justice Act.

6. This Agreement shall not become part of the public record of the proceedings unless and until it is accepted by the Commission. If this Agreement is accepted by the Commission it, together with the draft Complaint contemplated thereby, will be placed on the public record for a period of sixty (60) days and information in respect thereto publicly released. The Commission thereafter may either withdraw its acceptance of this Agreement and so notify the proposed respondents, in which event it will take such actions as it may consider appropriate, or issue and serve its Complaint (in such form as the circumstances may require) and decision in disposition of the proceeding.

7. This Agreement is for settlement purposes only and does not constitute an admission by proposed respondents that the law has been violated as alleged in the draft Complaint here attached, or that the facts as alleged in the draft Complaint, other than jurisdictional facts, are true.

8. This Agreement contemplates that, if it is accepted by the Commission, and if such acceptance is not subsequently withdrawn by the Commission pursuant to the provisions of § 2.34 of the Commission's Rules, the Commission may, without further notice to proposed respondents: (1) Issue its Complaint corresponding in form and substance to the draft Complaint here attached and its decision containing the following Order to divest and cease and desist; and (2) make information public with respect thereto. When so entered, the Order shall have the same force and effect and may be altered, modified, or set aside in the same manner and within the same time provided by statute for other orders. The Order shall become final upon service. Delivery by the United States Postal Service of the Complaint and decision containing the agreed-to Order to proposed respondents' address as stated in this Agreement shall constitute service. Proposed respondents waive any right they may have to any other manner of service. The Complaint may be used in construing the terms of the Order, and no agreement, understanding, representation, or interpretation not contained in the Order or the Agreement may be used to vary or contradict the terms of the Order.

9. Proposed respondents have read the proposed Complaint and Order contemplated hereby. They understand that once the Order has been issued, they will be required to file one or more compliance reports showing they have fully complied with the Order. Proposed respondents further understand that they may be liable for civil penalties in the amount provided by law for each violation of the Order after it becomes final.

Order

I

It is ordered that, As used in this Order, the following definitions shall apply:

A. "Alvey" means collectively Alvey Holdings, Inc., a Delaware corporation, and Alvey, Inc., a Missouri corporation, their predecessors, successors and assigns, divisions, subsidiaries, affiliates, companies, groups, partnerships, and joint ventures that they control, directly or indirectly, and their directors, officers, employees, agents and representatives, and their successors and assigns.

B. "Buschman" means The Buschman Company, a Delaware corporation, and a wholly-owned subsidiary of Alvey, Inc., and Buschman's predecessors, successors and assigns, divisions, subsidiaries, affiliates, companies, groups, partnerships, and joint ventures that Buschman controls, directly or indirectly, and their directors, officers, employees, agents and representatives, and their respective successors and assigns.

C. "Diamond" means the Diamond Machinery Division of Buschman headquartered in Lewiston, Maine, and specifically includes all assets used in or relating to the business of horizontal carousels of Alvey, without regard to title ownership of such assets, including the manufacturing, production, marketing, warehousing, distribution, and research and development facilities, and all other assets, properties, interests, business and goodwill, rights and privileges, tangible and intangible, related thereto, including, without limitation, the following assets attributable to or used by Diamond:

(1) All machinery, fixtures, equipment, vehicles, furniture, tools and all other tangible personal property;

(2) All customer lists, vendor lists, catalogs, sales promotion literature, advertising materials, management information systems, and software;

(3) Technical information, intellectual property rights, trademarks and trade names other than any trademark or trade name which includes in any form the name "Buschman," patents, inventions, trade secrets, technology, know-how, specifications, designs, drawings, processes and quality control data;

(4) Inventory;

(5) Accounts and notes receivable;

(6) All right, title and interest in and to owned or leased real property,

together with appurtenances, license and permits;

(7) All right, title and interest in and to the contracts entered into in the ordinary course of business with customers (together with associated bid and performance bonds), suppliers, sales representatives, distributors, agents, personal property lessors, personal property lessees, licensors, licensees, consignors and consignees;

(8) All rights under warranties and guarantees, express or implied;

(9) All books, records and files;

(10) All items of prepaid expenses;

(11) All known and unknown, liquidated or unliquidated, contingent or fixed, rights or causes of action which Diamond has or may have against any third party and all such rights which Diamond has or may have in or to any asset; and

(12) All customer (except Buschman Europe A/S) agreements or understandings, whether formal or informal, and all customer records and files.

D. "White" means White Storage & Retrieval Systems, Inc., a New Jersey corporation.

E. "Acquisition" means the stock acquisition of White by Alvey from Donald J. Weiss, as referenced in Commission Premerger Report Number 93–1624.

F. "Commission" means the Federal Trade Commission.

G. "Horizontal Carousels" means continuous loop, horizontally revolving devices for materials handling and storage, and generally consisting of drive mechanisms, power sources, controls, related software, and automatic load/unload devices.

II

It is further ordered that, Alvey shall comply with all the terms of the Hold Separate Agreement attached hereto as Appendix A and made a part of this Order. The Hold Separate Agreement shall continue in effect until such time as Alvey or the trustee has accomplished the divestiture required by Paragraphs IV and V of this Order or until such time as the Hold Separate Agreement provides.

III

It is further ordered that, Pending divestiture of Diamond, Alvey shall take such action as is necessary to maintain the viability and marketability of Diamond, and shall not cause or permit the destruction, removal, wasting, deterioration or impairment of Diamond, except in the ordinary course of business that does not affect the viability and marketability of Diamond, ordinary wear and tear expected.

IV

It is further ordered that, Within six (6) months after the date that this Order becomes final, Alvey shall divest, absolutely and in good faith, Diamond. The divestiture shall be made only in a manner that receives the prior approval of the Commission and only to an acquirer that receives the prior approval of the Commission. The purpose of the divestiture is to ensure the continuation of the assets as an ongoing viable business engaged in the manufacture and sale of horizontal carousels, to maintain Diamond as an independent competitor in the horizontal carousel business, and to remedy the lessening of competition resulting from the Acquisition as alleged in the Commission's Complaint.

V

It is further ordered that:

A. If Alvey has not fully complied, absolutely and in good faith, with Paragraph IV of this Order within the time period provided in such Paragraph, Alvey shall consent to the appointment by the Commission of a trustee to divest Diamond. In the event the Commission or the Attorney General brings an action pursuant to section 5(*l*) of the Federal Trade Commission Act, 15 U.S.C. 45(*l*), or any other statute enforced by the Commission, Alvey shall similarly consent to the appointment of a trustee in such action. Neither the appointment of a trustee nor a decision not to appoint a trustee under this Paragraph shall preclude the Commission or the Attorney General from seeking civil penalties or any other relief available to it, including a court-appointed trustee, pursuant to section (*l*) of the Federal Trade Commission Act, or any other statute enforced by the Commission, for any failure by Alvey to comply with this Order.

B. If a trustee is appointed by the Commission or a court pursuant to Paragraph V.A. or this Order, Alvey shall consent to the following terms and conditions regarding the trustee's powers, duties, authorities, and responsibilities:

(1) The Commission shall select the trustee, subject to the consent of Alvey, which consent shall not be unreasonably withheld. The trustee shall be a person with experience and expertise in acquisitions and divestitures. If Alvey has not opposed the selection of a proposed trustee within fifteen (15) days after notice by the Commission's staff to Alvey of the identity of the proposed trustee, Alvey shall be deemed to have consented to the selection of the proposed trustee.

(2) Subject to the prior approval of the Commission, the trustee shall have the exclusive power and authority to divest Diamond, and to make any further arrangements that may be reasonably necessary to maintain the viability and competitiveness of Diamond's business.

(3) The trustee shall have twelve (12) months from the date the Commission approves the trust agreement described in Paragraph V.B(8) to accomplish the divestiture. If, however, at the end of the twelve-month period, the trustee has submitted a plan of divestiture or believes that the divestiture can be accomplished within a reasonable time, the divestiture period may be extended by the Commission or, in the case of a court-appointed trustee, by the court, provided, however, the Commission may only extend the trustee's divestiture period two (2) times for such reasonable time as the trustee may request, not to exceed one (1) additional year.

(4) The trustee shall have full and complete access to the personnel, books, records, and facilities related to Diamond, or to any other relevant information, as the trustee may request. Alvey shall develop such financial or other information as such trustee may request and shall cooperate with any request of the trustee. Alvey shall take no action to interface with or impede the trustee's accomplishment of the divestiture. Any delays in the divestiture caused by Alvey shall extend the time for divestiture under Paragraph V.B(3) in an amount equal to the delay, as determined by the Commission or, for a court-appointed trustee, by the court.

(5) Subject to Alvey's absolute and unconditional obligation to divest at no minimum price, and the purpose of the divestiture as stated in Paragraph IV of this Order, the trustee shall use his or her best efforts to negotiate the most favorable price and terms available for the divestiture. The divestiture shall be made in the manner set out in Paragraph IV of this Order, provided, however, that it the trustee receives bona fide offers from more than one acquiring entity, and if the Commission determines to approve more than one such acquiring entity, the trustee shall divest to the acquiring entity or entities selected by Alvey from among those approved by the Commission.

(6) The trustee shall serve, without bond or other security, at the cost and expense of Alvey, on such reasonable and customary terms and conditions as the Commission or, in the case of a court-appointed trustee, the court, may set. The trustee shall have authority to

employ, at the cost and expense of Alvey, such consultants, accountants, attorneys, investment bankers, business brokers, appraisers, and other representatives and assistants as are reasonably necessary to carry out the trustee's duties and responsibilities. The trustee shall account to Alvey for all monies derived from the divestiture and all expenses incurred. After approval by the Commission and, in the case of a court-appointed trustee, by the court, of the account of the trustee, including fees for his or her services, all remaining monies shall be paid at the direction of Alvey and the trustee's power shall be terminated. The trustee's compensation shall be based in significant part on a commission arrangement contingent on the trustee's divesting Diamond.

(7) Alvey shall indemnify the trustee and hold the trustee harmless against any losses, claims, damages, liabilities, or expenses arising out of, or in connection with, the performance of the trusteeship, including all reasonable fees of counsel and other expenses incurred in connection with the preparation for, or defense of any claim, whether or not resulting in any liability, except to the extent that such liabilities, losses, damages, claims, or expenses result from misfeasance, negligence, willful or wanton acts, or bad faith by the trustee.

(8) Within ten (10) days after appointment of the trustee, and subject to the prior approval of the Commission and, in the case of a court-appointed trustee, of the court, Alvey shall execute a trust agreement that transfers to the trustee all rights and powers necessary to permit the trustee to effect the divestiture required by this Order.

(9) If the trustee ceases to act or fails to act diligently, a substitute trustee shall be appointed in the same manner as provided in Paragraph V.A. of this Order.

(10) The Commission or, in the case of a court-appointed trustee, the court may on its own initiative or at the request of the trustee issue such additional orders or directions as may be necessary or appropriate to accomplish the divestiture required by this Order.

(11) The trustee shall have no obligation or authority to operate or maintain Diamond.

(12) The trustee shall report in writing to Alvey and to the Commission every sixty (60) days concerning the trustee's efforts to accomplish divestiture.

VI

It is further ordered that, Within sixty (60) days after the date this Order becomes final and every sixty (60) days thereafter until Alvey has fully complied with the provisions of Paragraphs II, III, IV and V of this Order, Alvey shall submit to the Commission a verified written report setting forth in detail the manner and form in which it intends to comply, is complying, or has complied with those provisions. Alvey shall include in its compliance reports, among other things that are required from time to time, a full description of all substantive contacts or negotiations for the divestiture, including the identity of all parties contacted. Alvey also shall include in its compliance reports copies of all written communications to and from such parties, all internal memoranda, and all reports and recommendations concerning divestiture.

VII

It is further ordered that, For a period of ten (10) years from the date on which this Order becomes final, Alvey shall not, without the prior approval of the Commission, directly or indirectly, through subsidiaries, partnerships, or otherwise:

A. Acquire any stock, share capital, equity or other interest in any concern, corporate or noncorporate, then engaged in, or within the two years prior to such acquisition engaged in, the manufacture or sale of horizontal carousels in the United States.

B. Except in the ordinary course of business, acquire any assets used for, or previously used for (and still suitable for use for) the manufacture of horizontal carousels from any concern, corporate or non-corporate, then engaged in, or within the two years prior to such acquisition engaged in, the manufacture or sale of horizontal carousels in the United States.

On the anniversary of the date on which this Order becomes final, and on every anniversary thereafter for the following nine (9) years, Alvey shall file with the Commission a verified written report of its compliance with this Paragraph of this Order.

VIII

It is further ordered that, For the purposes of determining or securing compliance with this Order, and subject to any legally recognized privilege, upon written request and on reasonable notice to Alvey, Alvey shall permit any duly authorized representatives of the Commission:

A. Access, during office hours and in the presence of counsel, to inspect and copy all books, ledgers, accounts, correspondence, memoranda and other records and documents in the possession or under the control of Alvey relating to any matters contained in this Order; and

B. Upon five (5) days notice to Alvey, and without restraint or interference from Alvey, to interview officers or employees of Alvey, who may have counsel present, regarding such matters.

IX

It is further ordered that, Alvey shall notify the Commission at least thirty (30) days prior to any change in Alvey that may affect compliance obligations arising out of this Order such as dissolution, assignment, or sale resulting in the emergence of a successor, the creation or dissolution of subsidiaries, or any other change.

Agreement To Hold Separate

This Agreement to Hold Separate (the "Agreement") is by and between Alvey Holdings, Inc., a corporation organized and existing under the laws of the State of Delaware, and Alvey, Inc., a corporation organized and existing under the laws of the State of Missouri (collectively "Alvey"), both with their principal offices and places of business located at 9301 Olive Boulevard, St. Louis, Missouri 63137, and the Federal Trade Commission (the "Commission"), an independent agency of the United States Government, established under the Federal Trade Commission Act of 1914, 15 U.S.C. 41, *et seq.* (collectively, the "Parties").

Premises

Whereas, on August 6, 1993, Alvey entered into a Stock Purchase Agreement in which Alvey agreed to purchase from Donald J. Weiss 100% of the voting securities of White Storage & Retrieval Systems, Inc. ("White"), a New Jersey corporation (hereinafter the "Acquisition"); and

Whereas, Alvey and White both own and operate facilities in the United States for the manufacture and sale of horizontal carousels; and

Whereas, the Commission is now investigating the Acquisition to determine if it would violate any of the statutes enforced by the Commission; and

Whereas, if the Commission accepts the attached Agreement Containing Consent Order ("Consent Order"), the Commission must place it on the public record for a period of at least sixty (60) days and may subsequently withdraw such acceptance pursuant to the provisions of § 2.34 of the Commission's Rules; and

Whereas, the Commission is concerned that if an understanding is not reached, preserving the *status quo ante* with respect to the horizontal

carousel manufacturing facilities owned by Alvey during the period prior to the final acceptance of the Consent Order by the Commission (after the 60-day public notice period), divestiture resulting from any proceeding challenging the legality of the Acquisition might not be possible, or might be less than an effective remedy; and

Whereas, the Commission is concerned that if the Acquisition is consummated, it will be necessary to preserve the Commission's ability to require the divestiture of the Diamond Machinery Division ("Diamond") of Alvey's The Buschman Company ("Buschman") subsidiary as described in Paragraph I of the Consent Order and the Commission's right to seek to restore Diamond as a viable competitor in the horizontal carousel business in the United States; and

Whereas, the purpose of this Agreement and the Consent Order is to:

(i) Preserve Diamond as an independent business pending its divestiture as an ongoing enterprise,

(ii) Remedy any anticompetitive effects of the Acquisition, and

(iii) Preserve Diamond as an ongoing entity engaged in the horizontal carousel business in the United States in the event that divestiture is not achieved; and

Whereas, Alvey's entering into this Agreement shall in no way be construed as an admission by Alvey that the Acquisition is illegal; and

Whereas, Alvey understands that no act or transaction contemplated by this Agreement shall be deemed immune or exempt from the provisions of the antitrust laws or the Federal Trade Commission Act by reason of anything contained in this Agreement;

Now, therefore, the Parties agree, upon understanding that the Commission has determined that it has reason to believe the acquisition may substantially lessen competition, and in consideration of the Commission's agreement that, unless the Commission determines to reject the Consent Order, it will not seek further relief from Alvey with respect to effects of the Acquisition on horizontal carousel manufacturing and sales in the United States, except that the Commission may exercise any and all rights to enforce this Agreement and the Consent Order to which it is annexed and made a part thereof, and, in the event the required divestiture is not accomplished, to seek divestiture of Diamond pursuant to the Consent Agreement, and other relief, as follows:

1. Alvey agrees to execute and be bound by the attached Consent Order.

2. Alvey agrees that from the date this Agreement is accepted until the first of the dates listed in subparagraphs 2.a–2.c, hereof, it will comply with the provisions of paragraph 3 of this Agreement:

a. Three business days after the Commission withdraws its acceptance of the Consent Order pursuant to the provisions of § 2.34 of the Commission's Rules;

b. 120 days after publication in the **Federal Register** of the Consent Order, unless by that date the Commission has finally accepted such Order; or

c. The day after the divestiture required by the Consent Order have been completed.

3. Alvey will hold Diamond, as it is to be reconstituted in accordance with this Agreement, separate and apart on the following terms and conditions:

a. Prior to Alvey acquiring White and within thirty (30) days of the date that this Agreement is accepted by the Commission, Alvey shall cause Diamond to be incorporated as a corporation, separate and distinct from Alvey and/or Buschman, duly organized under and existing by virtue of the laws of the State of Maine, and will effect all formalities and legal requirements necessary to accomplish such incorporation.

b. Diamond shall be held separate and apart and shall be operated independently of Alvey (meaning here and hereinafter, Alvey excluding Diamond and excluding all personnel connected with Diamond as of the date this Agreement was signed) except to the extent that Alvey must exercise direction and control over Diamond to assure compliance with this Agreement or the Consent Order, or with respect to the services to be provided by Alvey and/or Buschman pursuant to contract, as provided in subparagraph 3.f hereof.

c. Alvey shall not exercise direction or control over, or influence directly or indirectly, Diamond; provided, however, that Alvey may exercise only such direction and control over Diamond as is necessary to assure compliance with this Agreement or the Consent Order.

d. Alvey shall maintain the viability and marketability of Diamond, and shall not sell, transfer, encumber (other than in the normal course of business), or otherwise impair its marketability or viability.

e. Except for the single Alvey director, officer, employee, or agent serving on the "Diamond Board" (as defined in subparagraph 3.j hereof), Alvey shall not permit any director, officer, employee, or agent of Alvey or White also to be a director, officer or employee of Diamond.

f. Except as required by law or except to the extent that necessary information is exchanged in the course of defending investigations or litigation, obtaining legal advice, acting to assure compliance with this Agreement or the Consent Order (including accomplishing the divestiture), and except to the extent that certain designated individuals on Alvey's accounting and order confirmation staff may provide accounting and order confirmation services to Diamond on the basis of a contractual arrangement between Alvey and Diamond, Alvey shall not receive or have access to, or the use of, any of Diamond's "material confidential information" not in the public domain. Any such information that is obtained pursuant to this subparagraph shall only be used for the purposes set out in this subparagraph. ("Material confidential information," as used herein, means competitively sensitive or proprietary information not independently known to Alvey, and includes, but is not limited to, customer lists, customers, price lists, prices, individual transactions, marketing methods, patents, technologies, processes, or other trade secrets)

g. Alvey may retain an independent auditor to monitor the operation of Diamond. Said auditor may report to Alvey on all aspects of the operation of Diamond other than information on customer lists, customers, price lists, prices, individual transactions, marketing methods, patents, technologies, processes, or other trade secrets.

h. Alvey shall not change the composition of the management of Diamond except that: (1) The non-Alvey (as Alvey is defined in subparagraph 3.b hereof) directors or members serving on the Diamond Board (as defined in subparagraph 3.j hereof) shall have the power to remove employees; (2) within five (5) days of the incorporation referred to in paragraph 3.a hereof, Alvey shall be permitted to name and appoint Diamond's corporate officers; and (3) Richard Anderson, currently Operations Manager for Diamond, and a long-time Buschman employee, may be permitted to transfer back to Cincinnati as had been previously agreed upon.

i. All material transactions out of the ordinary course of business and not precluded by subparagraphs 3.a–3.h hereof, shall be subject to a majority vote of the Diamond Board (as defined in subparagraph 3.j hereof). The Diamond management shall prepare capital and operating budgets each six (6) months, which shall be subject to approval of a majority of the Diamond

Board (as defined in subparagraph 3.j hereof).

j. Alvey shall elect a new three-person board of directors of Diamond ("Diamond Board") once the incorporation referred to in subparagraph 3.a hereof has occurred. The Diamond Board shall have the exclusive authority for managing Diamond. Alvey may elect the directors to the Diamond Board provided, however, that no director of the Diamond Board shall have had prior responsibility for, or knowledge of confidential information regarding Alvey's or White's horizontal carousel business, and no more than one Alvey director, officer, employee, or agent shall be a director of the Diamond Board ("Alvey Director"). Except as permitted by this Agreement, no Alvey Director, so long as he or she serves as a director, shall receive, in his or her capacity as a director of the Diamond Board, material confidential information and shall not disclose any such information received under this Agreement to Alvey or use it to obtain any advantage for Alvey. Such Alvey Director shall participate in matters which come before the Diamond Board only for the limited purpose of considering a capital investment, the hiring of outside services, or lease transactions in amounts exceeding $10,000, and carrying out Alvey's responsibilities under this Agreement or the Consent Order. Except as permitted by this Agreement, such Alvey Director shall not participate in any matter, or attempt to influence the votes of the other directors with respect to matters, that would involve a conflict of interest if Alvey and Diamond were separate and independent entities. Meetings of the Diamond Board during the term of this Agreement shall be stenographically transcribed and the transcripts retained for two (2) years after the termination of this Agreement.

k. Any Alvey employee who obtains or may obtain confidential information under this Agreement shall enter a confidentiality agreement prohibiting disclosure of confidential information until the day after the divestiture required by the Consent Order has been completed.

l. All earnings and profits of Diamond shall be retained separately in or on behalf of Diamond. If necessary, Alvey shall provide Diamond with sufficient working capital to operate at its historic rate of operation.

m. Should the Federal Trade Commission seek in any proceeding to compel Alvey (meaning here and hereinafter Alvey including Diamond) to divest itself of Diamond or to compel Alvey to divest any assets or businesses of Diamond that it may hold, or to seek any other injunctive or equitable relief, Alvey shall not raise any objection based upon the expiration of the applicable Hart-Scott-Rodino Antitrust Improvements Act waiting period or the fact that the Commission has permitted the Acquisition. Alvey waives all rights to contest the validity of this Agreement.

4. For the purpose of determining or securing compliance with this Agreement, subject to any legally recognized privilege, and upon written request with reasonable notice to Alvey made to its principal office, Alvey shall permit any duly authorized representative or representatives of the Commission:

a. Access during the office hours of Alvey and in the presence of counsel to inspect and copy all books, ledgers, accounts, correspondence, memoranda, and other records and documents in the possession or under the control of Alvey relating to compliance with this Agreement;

b. Upon five (5) days notice to Alvey, and without restraint or interference from it, to interview officers or employees of Alvey, who may have counsel present, regarding any such matters.

5. This agreement shall not be binding until approved by the Commission.

Analysis of Proposed Consent Order To Aid Public Comment

The Federal Trade Commission (Commission) has accepted, subject to final approval, an Agreement Containing Consent Order from Alvey Holdings, Inc. and Alvey, Inc. (collectively "Alvey").

The proposed Consent Order (Order) has been placed on the public record for sixty (60) days for reception of comments by interested persons. Comments received during this period will become part of the public record. After sixty (60) days, the Commission will again review the Agreement and the comments received and will decide whether it should withdraw from the Agreement or make final the Agreement's proposed Order.

The Commission's investigation of this matter concerned Alvey's proposed acquisition of the capital stock of White Storage & Retrieval Systems, Inc. (White). Both Alvey and White make and sell horizontal carousels in the United States and are direct and substantial competitors. Horizontal carousels are continuous loop, horizontally revolving devices for materials handling and storage, consisting of drive mechanisms, power sources, controls, related software, and automatic load/unload devices.

The Commission has reason to believe that Alvey's acquisition of White would substantially lessen competition in the United States horizontal carousel market. The proposed Complaint charges that there are only four competitors in the United States horizontal carousel market—White, the Diamond Machinery Division of Alvey's Buschman subsidiary, Raymond Corporation, and Richards-Wilcox, Inc.—which collectively make approximately $20 million in horizontal carousel sales annually. White is the leading manufacturer and seller of horizontal carousels in the United States, with approximately 55% of dollar sales. Alvey is a significant competitor to White in horizontal carousels, with around 23% of dollar sales in the U.S. The U.S. horizontal carousel market is already highly concentrated, whether measured by the Herfindahl-Hirschman Index or by four-firm concentration ratios. Alvey's acquisition of White will substantially increase concentration in an already highly concentrated market. Entry into the market sufficient to undermine an anticompetitive price increase would take well in excess of two years because of the need for competitors to have reference sites, software, an installed base of customers, and an effective reputation for competency in developing system integration capabilities.

According to a proposed Complaint accompanying the Agreement, the proposed acquisition would be in violation of section 7 of the Clayton Act, as amended, 15 U.S.C. 18, and section 5 of the FTC Act, as amended, 15 U.S.C. 45. The proposed Order, if issued by the Commission, would settle the Complaint, which alleges anticompetitive effects in the United States horizontal carousel market.

Under the proposed Order, Alvey would have six (6) months from the date the proposed Order becomes final to divest the Diamond Machinery Division of Buschman, which constitutes Alvey's horizontal carousel business. The divestiture would be made only to an acquirer that receives the prior approval of the Commission. If Alvey failed to divest Diamond to an approved acquirer within six (6) months after the date the proposed Order becomes final, Alvey would consent to the Commission's appointment of a trustee to complete the divestiture. Pending completion of the divestiture required under the proposed Order, Alvey would be required to maintain the viability and marketability of Diamond.

Under the terms of the proposed Order, Alvey would also be required to comply with all the terms of a Hold Separate Agreement executed by Alvey and the Commission, which would require Alvey to hold Diamond separate and apart from Alvey. Alvey would not be permitted to influence or exercise any direction or control over Diamond. Alvey would be required to elect a new three-member board of directors of Diamond to oversee the present management of the company.

The proposed Order would also prohibit Alvey, for a period of ten (10) years from the date the proposed Order becomes final, from acquiring, without the prior approval of the Commission, any interest in any concern engaged in the manufacture or sale of horizontal carousels in the United States.

It is anticipated that the proposed Order would resolve the competitive problems alleged in the Complaint. The purpose of this analysis is to facilitate public comment on the proposed Order, and it is not intended to constitute an official interpretation of the Agreement and proposed Order or to modify in any way their terms.

Donald S. Clark,

Secretary.

[FR Doc. 93-30681 Filed 12-15-93; 8:45 am]

BILLING CODE 6750-01-M

[Dkt. 9262]

Baltimore Metropolitan Pharmaceutical Association, Inc., et al.; Proposed Consent Agreement With Analysis To Aid Public Comment

AGENCY: Federal Trade Commission.

ACTION: Proposed Consent Agreement.

SUMMARY: In settlement of alleged violations of Federal law prohibiting unfair acts and practices and unfair methods of competition, this consent agreement, accepted subject to final Commission approval, would prohibit, among other things, two Maryland associations from entering into, or organizing or encouraging any agreement among pharmacy firms to refuse to participate in third-party payer prescription drug reimbursement plans. It would also prohibit, for five years, the respondents from providing comments or advice to any pharmacist or pharmacy on the desirability, profitability, or appropriateness of participating in any existing or proposed participation agreement.

DATES: Comments must be received on or before February 14, 1994.

ADDRESSES: Comments should be directed to: FTC/Office of the Secretary, room 159, 6th St. and Pa. Ave., NW., Washington, DC 20580.

FOR FURTHER INFORMATION CONTACT: John Hoagland, FTC/S-3308, Washington, DC 20580. (202) 326-2893.

SUPPLEMENTARY INFORMATION: Pursuant to section 6(f) of the Federal Trade Commission Act, 38 Stat. 721, 15 U.S.C. 46 and § 3.25(f) of the Commission's Rules of Practice (16 CFR 3.25(f)), notice is hereby given that the following consent agreement containing a consent order to cease and desist, having been filed with and accepted, subject to final approval, by the Commission, has been placed on the public record for a period of sixty (60) days. Public comment is invited. Such comments or views will be considered by the Commission and will be available for inspection and copying at its principal office in accordance with § 4.9(b)(6)(ii) of the Commission's Rules of Practice (16 CFR 4.9(b)(6)(ii)).

Agreement Containing Consent Order To Cease and Desist

In the Matter of Baltimore Metropolitan Pharmaceutical Association, Inc., a corporation, and Maryland Pharmacists Association, Inc., a corporation.

The agreement herein, by and between the Baltimore Metropolitan Pharmaceutical Association, Inc., a corporation, and the Maryland Pharmacists Association, Inc., a corporation, (hereinafter sometimes referred to as "BMPA" and "MPhA," respectively, or as "respondents," collectively), by their duly authorized officers, and their attorney, and counsel for the Federal Trade Commission, is entered into in accordance with the Commission's Rule governing consent order procedures. In accordance therewith the parties hereby agree that:

1. Respondent BMPA is a corporation organized, existing, and doing business under and by virtue of the laws of the State of Maryland. Respondent MPhA is a corporation organized, existing, and doing business under and by virtue of the laws of the State of Maryland. Both respondents have their offices and principal places of business at 650 West Lombard Street, Baltimore, Maryland 21201.

2. Respondents have been served with a copy of the complaint issued by the Federal Trade Commission charging them with violation of section 5 of the Federal Trade Commission Act.

3. Respondents admit all the jurisdictional facts set forth in the Commission's complaint in this proceeding.

4. Respondents waive:

(a) Any further procedural steps;

(b) The requirement that the Commission's decision contain a statement of findings of fact and conclusions of law;

(c) All rights to seek judicial review or otherwise to challenge or contest the validity of the order entered pursuant to this agreement; and

(d) Any claim under the Equal Access to Justice Act.

5. This agreement shall not become part of the public record of the proceeding unless and until it is accepted by the Commission. If this agreement is accepted by the Commission, it will be placed on the public record for a period of sixty (60) days and information with respect thereto publicly released. The Commission thereafter may either withdraw its acceptance of this agreement and so notify respondents, in which event it will take such action as it may consider appropriate, or issue and serve its decision, in disposition of the proceeding.

6. This agreement is for settlement purposes only and does not constitute an admission by respondents that the law has been violated as alleged in said copy of the complaint issued by the Commission.

7. This agreement contemplates that, if it is accepted by the Commission, and if such acceptance is not subsequently withdrawn by the Commission pursuant to the provisions of § 3.25(f) of the Commission's Rules, the Commission may, without further notice to respondents, (1) issue its decision containing the following order to cease and desist in disposition of the proceeding, and (2) make information public in respect thereto. When so entered, the order to cease and desist shall have the same force and effect and may be altered, modified, or set aside in the same manner and within the same time provided by statute for other orders. The order shall become final upon service. Delivery by the U.S. Postal Service of the decision containing the agreed-to order to respondents' address, as stated in this agreement, shall constitute service. Respondents waive any right they may have to any other manner of service. The complaint may be used in construing the terms of the order, and no agreement, understanding, representation, or interpretation not contained in the order or the agreement may be used to vary or to contradict the terms of the order.

8. Respondents have read the complaint and the order contemplated hereby. They understand that once the order has been issued, they will be required to file one or more compliance reports showing that they have fully

complied with the order. Respondents further understand that they may be liable for civil penalties in the amount provided by law for each violation of the order after it becomes final.

Order

I

For purposes of this order, the following definitions shall apply:

A. "BMPA" means the Baltimore Metropolitan Pharmaceutical Association, Inc., and its directors, committees, officers, agents, representatives, employees, successors and assigns;

B. "MPhA" means the Maryland Pharmacists Association, Inc., and its directors, committees, officers, agents, representatives, employees, successors and assigns;

C. "Third-party payer" means any person or entity that provides a program or plan pursuant to which such person or entity agrees to pay for prescriptions dispensed by pharmacies to individuals described in the plan or program as eligible for coverage ("Covered Persons"), and includes, but is not limited to, health insurance companies; prepaid hospital, medical, or other health service plans, such as Blue Cross and Blue Shield plans; health maintenance organizations; preferred provider organizations; prescription service administrative organizations; and health benefits programs for government employees, retirees and dependents;

D. "Participation agreement" means any existing or proposed agreement, oral or written, in which a third-party payer agrees to reimburse a pharmacy firm for the dispensing of prescription drugs to Covered Persons, and the pharmacy firm agrees to accept such payment from the third-party payer for such prescriptions dispensed during the term of the agreement;

E. "Pharmacy firm" means any partnership, sole proprietorship or corporation, including all of its subsidiaries, affiliates, divisions and joint ventures, that owns, controls or operates one or more pharmacies, including the directors, officers, employees, and agents of such partnership, sole proprietorship or corporation, as well as the directors, officers, employees, and agents of such partnership's, sole proprietorship's or corporation's subsidiaries, affiliates, divisions and joint ventures. The words "subsidiary," "affiliate," and "joint venture" refer to any firm in which there is partial (10% or more) or total ownership or control between corporations.

II

It is ordered that, BMPA and MPhA, directly, indirectly, or through any corporate or other device, in or in connection with their activities in or affecting commerce, as "commerce" is defined in section 4 of the Federal Trade Commission Act, forthwith cease and desist from:

A. Entering into, threatening or attempting to enter into, organizing, encouraging, continuing, cooperating in, or carrying out any agreement between or among pharmacy firms, either express or implied, to withdraw from, threaten to withdraw from, refuse to enter into, or threaten to refuse to enter into, any participation agreement;

B. For a period of five (5) years after the date this order becomes final, continuing a formal or informal meeting of representatives of pharmacy firms after (1) any person makes any statement concerning one or more firms, intentions or decisions with respect to entering into, refusing to enter into, threatening to refuse to enter into, participating in, threatening to withdraw from, or withdrawing from any existing or proposed participation agreement and BMPA or MPhA fails to eject such person from the meeting, or (2) two persons make any such statements;

C. For a period of five (5) years after the date this order becomes final, communicating in any way to, or soliciting in any way from, any pharmacist or pharmacy firm any information concerning any pharmacy firm's intention or decision with respect to entering into, refusing to enter into, threatening to refuse to enter into, participating in, threatening to withdraw from, or withdrawing from any existing or proposed participation agreement; and

D. For a period of five (5) years after the date this order becomes final, providing comments or advice to any pharmacist or pharmacy firm on the desirability, profitability or appropriateness of participating in any existing or proposed participation agreement. However, nothing in this paragraph shall prohibit BMPA or MPhA from communicating purely factual information describing the terms and conditions of any participation agreement or operations of any third-party payers.

Provided that nothing in this order shall be construed to prevent BMPA or MPhA from exercising rights protected under the First Amendment to the United States Constitution to petition any federal, state, or local government executive agency or legislative body concerning legislation, rules, programs, procedures, or plans, or to participate in any federal, state, or local administrative or judicial proceeding.

III

It is further ordered that:

A. BMPA distribute by first-class mail a copy of this order and the accompanying complaint to each of its members within sixty (60) days after the date this order becomes final;

B. MPhA distribute by first-class mail a copy of this order and the accompanying complaint to each of its members that is not also a member of BMPA, within sixty (60) days after the date this order becomes final;

C. MPhA publish this order and the accompanying complaint in an issue of The Maryland Pharmacist or in any successor publication published no later than ninety (90) days after the date this order becomes final, in the same type size normally used for articles that are published in The Maryland Pharmacist or successor publication;

D. BMPA and MPhA, for a period of five (5) years after the date this order becomes final, provide each new BMPA member and MPhA member with a copy of this order at the time the member is accepted into membership of BMPA or MPhA;

E. BMPA and MPhA each file a verified, written report with the Commission within ninety (90) days after the date this order becomes final, and annually thereafter for five (5) years on the anniversary of the date this order becomes final, and at such other times as the Commission may, by written notice to BMPA or MPhA, require, setting forth in detail the manner and form in which it has compiled and is complying with the order;

F. BMPA and MPhA for a period of five (5) years after the date this order becomes final, maintain and make available to Commission staff for inspection and copying upon reasonable notice, records adequate to describe in detail any action taken in connection with the activities covered by parts II and III of this order, including, but not limited to, all documents generated by BMPA or MPhA or that come into BMPA's or MPhA's possession, custody, or control regardless of source, that embody, discuss or refer to the terms or conditions of any participation agreement; and

G. BMPA and MPhA notify the Commission at least thirty (30) days prior to any proposed change in BMPA or MPhA such as, assignment or sale resulting in the emergence of a successor corporation or association, change of name, change of address,

dissolution, or any other change that may affect compliance with this order.

Analysis of Proposed Consent Order To Aid Public Comment

The Federal Trade Commission has accepted, subject to final approval, an agreement to a proposed consent order. The agreement is from the Baltimore Metropolitan Pharmaceutical Association, Inc. ("BMPA") and the Maryland Pharmacists Association, Inc. ("MPhA") (collectively referred to as "respondents").

The proposed consent order has been placed on the public record for sixty (60) days for reception of comments by interested persons. Comments received during this period will become part of the public record. After sixty (60) days, the Commission will decide whether it should withdraw from the agreement or make final the agreement's proposed order.

Description of Complaint

The complaint issued by the Commission on September 28, 1993 alleges that respondents' members agreed to refuse to participate in the City of Baltimore ("City") employees prescription drug benefit plan ("Plan"). The complaint alleges that this agreement coerced the Prudential Insurance Company of America, Inc. ("Prudential") into raising the prices paid to Maryland pharmacies, benefitting respondents' members. More specifically, the complaint alleges the following facts.

BMPA and MPhA are associations of pharmacists who practice or reside in Maryland. In 1988, respondents were, and still are, affiliated. BMPA and MPhA share common offices and staff, including a common Executive Director. Most of BMPA's members are also members of MPhA.

Customers often receive prescriptions through prescription drug benefit plans under which a third-party payer compensates the pharmacy directly for the prescription according to a predetermined formula. A pharmacy that has agreed to accept reimbursements under this formula is called a "participating pharmacy." The agreement that the participating pharmacy signs with the third-party payer is called a "participation agreement." The Plan was a prescription drug benefit plan that covered approximately 100,000 beneficiaries. Prudential insured the Plan, and PCS, Inc. ("PCS"), administered the Plan. While the contract between the City and Prudential did not set the reimbursement terms of the Plan, thus permitting Prudential to change the reimbursement rate at any time, the contract did require Prudential to have at least 100 participating pharmacies within the City. Pharmacies that participated in the Plan accepted as payment in full a reimbursement of the ingredient cost of the drug and a professional fee for dispensing the drug.

Prudential originally offered the Plan with the Average Wholesale Price ("AWP") of the drug as the upper limit for the reimbursement of the ingredient cost of the drugs dispensed. In 1988, respondents' members participated in many prescription drug benefit plans offered by third-party payers, including the Plan as it existed prior to August 15, 1988.

The complaint alleges that, on August 5, 1988, PCS announced that, on August 15, 1988, Prudential would reduce the upper limit of the reimbursement rate for ingredient costs for drugs to AWP minus 10%. The proposed reduction was intended to minimize costs by reducing the price paid to pharmacies for serving City employees, retirees, and their dependents, while offering a reimbursement rate high enough to attract a sufficient number of pharmacies to ensure that there were at least 100 participating pharmacies within the City. Members of the respondents would have suffered a loss of customers if their competitors had participated in the Plan at a time when they were not participating.

The complaint alleges that, in August through November of 1988, respondents: Held meetings where the reduction and possible action in response to it were discussed; communicated to pharmacists the need for pharmacies within the City to refuse to participate in the Plan so that Prudential would be in violation of its contractual obligation to have at least 100 participating pharmacies within the City and thus be forced to raise the reimbursement rate to its original level; requested pharmacists to notify them if their pharmacies did not intend to participate in the Plan; kept a list identifying those pharmacies that intended to stop participating in the Plan and communicated this information to their members. Through these exchanges of information, respondents' members were informed that a sufficient number of pharmacies had agreed to stop participating in the Plan to reduce the number of participating pharmacies within the City to below 100. Respondents exhorted their members not to participate in the Plan at the lower reimbursement rate in order to coerce Prudential to increase the level of reimbursement under the Plan. More than 75 pharmacies operated by member pharmacists within the City agreed to stop participating in the Plan on November 1, 1988. As a result, Prudential was placed in violation of its contract with the City and was forced to raise the reimbursement rate back to AWP on November 5, 1988.

The complaint alleges that the agreements to refuse to participate in the Plan injured consumers by reducing competition among pharmacy firms with respect to prescription drug benefit plans. The complaint further alleges that the agreements to refuse to participate in the Plan increased the cost of providing prescription drug benefit plans.

Description of the Proposed Consent Order

The proposed order would require the respondents to cease and desist from entering into any agreement to refuse to enter, threaten to refuse to enter, or withdraw from any existing or proposed participation agreement offered by a third-party payer. The proposed order would prohibit the respondents, for five years, from soliciting or communicating to any pharmacist any information concerning any pharmacy firm's intention or decision concerning participation in any participation agreement offered by a third-party payer. The proposed order would also prohibit the respondents, for five years, from continuing a meeting after any person makes any statement concerning one or more firms' intentions or decisions concerning participation in any participation agreement offered by a third-party payer unless that person is ejected from the meeting. If two persons make such statements, the meeting may not continue. The proposed order would prohibit the respondents, for five years, from providing comments or advice to any pharmacist or pharmacy on the desirability, profitability, or appropriateness of participating in any existing or proposed participation agreement.

The proposed order would not prohibit the respondents from communicating to their members purely factual information describing the terms and conditions of any participation agreement or operations of any third-party payer. Nor would the proposed order prohibit respondents from petitioning the government on matters involving legislation, rules, programs, procedures, or plans, or to participate in any federal, state, or local administrative or judicial proceeding.

The proposed order would require each respondent to distribute a copy of the order to its members. Where a member of MPhA is also a member of

BMPA, only BMPA would be required to send that member a copy of the order. The proposed order also would require MPhA to publish the order in The Maryland Pharmacist. The proposed order would also require respondents, for five years, to provide all new members with a copy of the order. The proposed order would also require the respondents to file compliance reports, to retain certain documents, and to notify the Commission of changes that may affect compliance with the proposed order.

The purpose of this analysis is to facilitate public comment on the proposed order, and is not intended to constitute an official interpretation of the agreement and proposed order or to modify their terms in any way.

The proposed consent order has been entered into for settlement purposes only, and does not constitute an admission by any of the respondents that the law has been violated as alleged in the complaint.

Donald S. Clark,

Secretary.

[FR Doc. 93-30682 Filed 12-15-93; 8:45 am]

BILLING CODE 6750-01-M

[Dkt. C-3472]

Columbia Hospital Corp., et al.; Prohibited Trade Practices, and Affirmative Corrective Actions

AGENCY: Federal Trade Commission.

ACTION: Consent Order.

SUMMARY: In settlement of alleged violations of Federal law prohibiting unfair acts and practices and unfair methods of competition, this consent order requires, among other things, the respondents to divest Kissimmee Memorial Hospital, and this divestiture has been consummated. In addition, it prohibits, among other things, the respondents from acquiring, for 10 years, any acute care hospital in Osceola County, Florida without prior Commission approval. The prior approval requirement also is to be met before respondents permit any acute care hospital they operate in the county to be acquired by any entity that already operates a hospital there.

DATES: Complaint and Order issued November 19, 1993.[1]

FOR FURTHER INFORMATION CONTACT: Mark Horoschak, FTC/S-3115, Washington, DC 20580. (202) 326-2756.

SUPPLEMENTARY INFORMATION: On Thursday, September 9, 1993, there was published in the **Federal Register**, 58 FR 47458, a proposed consent agreement with analysis In the Matter of Columbia Hospital Corporation, et al., for the purpose of soliciting public comment. Interested parties were given sixty (60) days in which to submit comments, suggestions or objections regarding the proposed form of the order.

No comments having been received, the Commission has ordered the issuance of the complaint in the form contemplated by the agreement, made its jurisdictional findings and entered an order to divest, as set forth in the proposed consent agreement, in disposition of this proceeding.

Authority: Sec. 6, 38 Stat. 721; 15 U.S.C. 46. Interpret or apply sec. 5, 38 Stat. 719, as amended; sec. 7, 38 Stat. 731, as amended; 15 U.S.C. 45, 18.

Donald S. Clark,

Secretary.

[FR Doc. 93-30680 Filed 12-15-93; 8:45 am]

BILLING CODE 6750-01-M

[1] Copies of the Complaint and the Decision and Order are available from the Commission's Public Reference Branch, H-130, 6th Street & Pennsylvania Avenue, NW., Washington, DC 20580.

[Docket No. C-3471]

OSRAM SYLVANIA Inc.; Prohibited Trade Practices, and Affirmative Corrective Actions

AGENCY: Federal Trade Commission.

ACTION: Consent Order.

SUMMARY: In settlement of alleged violations of Federal law prohibiting unfair acts and practices and unfair methods of competition, this consent order prohibits, among other things, a Massachusetts-based corporation from misrepresenting the light output, wattage, and energy cost savings of any of its light bulbs, except for certain speciality bulbs. The respondent is also required to disclose, whenever it claims electricity cost savings or any environmental benefits for its bulbs, that the bulbs produce less light than the bulbs to which they are compared, if true.

DATES: Complaint and Order issued November 17, 1993.[1]

FOR FURTHER INFORMATION CONTACT: Phoebe Morse or Sara Greenberg, Boston Regional Office, Federal Trade Commission, 10 Causeway St., room 1184, Boston, MA 02222-1073, (617) 565-7240.

SUPPLEMENTARY INFORMATION: On Tuesday, September 7, 1993, there was published in the **Federal Register**, 58 FR 47141, a proposed consent agreement with analysis In the Matter of OSRAM SYLVANIA Inc., for the purpose of soliciting public comment. Interested parties were given sixty (60) days in which to submit comments, suggestions or objections regarding the proposed form of the order.

No comments having been received, the Commission has ordered the issuance of the complaint in the form contemplated by the agreement, made its jurisdictional findings and entered an order to cease and desist, as set forth in the proposed consent agreement, in disposition of this proceeding.

Authority: Sec. 6, 38 Stat. 721; 15 U.S.C. 46. Interprets or applies sec. 5, 38 Stat. 719, as amended; 15 U.S.C. 45.

Donald S. Clark,

Secretary.

[FR Doc. 93-30676 Filed 12-15-93; 8:45 am]

BILLING CODE 6750-01-M

[1] Copies of the Complaint and the Decision and Order are available from the Commission's Public Reference Branch, H-130, 6th Street & Pennsylvania Avenue, NW., Washington, DC 20580.

DEPARTMENT OF HEALTH AND HUMAN SERVICES

Centers for Disease Control and Prevention

[Announcement Number 400]

Cooperative Agreements To Conduct Research, Treatment, and Education Programs on Lyme Disease in the United States

Introduction

The Centers for Disease Control and Prevention (CDC) announces the availability of Fiscal Year (FY) 1994 funds for a cooperative agreement program to conduct research on Lyme disease. Topics include: Disease surveillance and epidemiological studies, development of improved diagnostic tests, pathogenesis of infection with *Borrelia burgdorferi* (including the development of animal models), ecologic studies, and the development, implementation, and evaluation of prevention/control strategies. In addition, funds are available for the development of educational programs, and the development, production, and distribution of educational materials. This program's overall objective is to lower the incidence of Lyme disease in hyperendemic states to 5 per 100,000 population or less by the year 2000.

The Public Health Service (PHS) is committed to achieving the health promotion and disease prevention objectives of "Healthy People 2000," a PHS-led national activity to reduce morbidity and mortality and improve

the quality of life. This announcement is related to the priority area of Immunization and Infectious Diseases. (For ordering a copy of "Healthy People 2000," see the Section "Where To Obtain Additional Information.")

Authority

This program is authorized under sections 301 and 317 of the Public Health Service Act, as amended (42 U.S.C 241 and 247b).

Eligible Applicants

Applications may be submitted by public and private, nonprofit organizations and governments and their agencies. Thus, universities, colleges, research institutions, hospitals, other public and private organizations, state and local health departments, or their bona fide agents, federally recognized Indian tribal governments, Indian tribes or Indian tribal organizations, and small, minority- and/or women-owned non-profit businesses are eligible to apply.

Participation in proposed activities by physicians, scientists, public health specialists and educators with expertise and experience in Lyme disease and its associated microbiologic, immunologic, environmental and entomological aspects is desirable. In addition, combined program activities involving state and local health departments, universities, colleges, and private nonprofit organizations are encouraged. Preference will be given to competing continuation applications.

Availability of Funds

Approximately $2,700,000 is available in FY 1994 to fund approximately 15 to 25 new and competing continuation awards. Approximately 25% of the available funds is allocated to develop improved disease surveillance and conduct epidemiological studies; approximately 25–30% of the available funds is allocated to develop and standardize more specific and sensitive diagnostic tests and study the pathogenesis of infection with *B. burgdorferi* including aspects related to immunoprotection; approximately 25% of the available funds is allocated to conduct ecologic studies and develop and implement strategies for prevention and control; and, approximately 20–25% of the available funds is allocated to educate the public and health professionals on the primary and secondary prevention of Lyme disease. Applications may be submitted for any or all of the activities described above.

It is expected that the median award will be $125,000 ranging from $50,000 to $250,000. It is expected that the new awards will begin on or about April 1, 1994 and that any competing continuation awards will begin on May 30, 1994. These awards will be funded for a 12-month budget period within a project period of up to 3 years. The initial budget period for any competing continuation award will be approximately 10 months in order to accommodate future funding cycles beginning in April. Funding estimates for each budget period may vary and are subject to change. Continuation awards within the project period are made on the basis of satisfactory progress and the availability of funds.

Recipient Financial Participation

There are no matching or cost participation requirements; however, the applicant's anticipated contribution to the overall program costs, if any, should be provided on the application. These funds should not supplant existing expenditures in this disease area.

Purpose

The purpose of these cooperative agreements is to: (1) Provide assistance in assessing the annual incidence and trends of Lyme disease in various geographic regions of the United States, (2) develop and standardize more sensitive and specific diagnostic tests, (3) assess risk factors associated with the transmission of the disease, including behavioral and environmental factors, (4) measure the public health impact of early and late stages of Lyme disease, (5) determine the distribution and density of vector tick species, determine *B. burgdorferi* infection rates of these vectors, and characterize the ecological factors which result in high infection rates in tick and vertebrate host populations, (6) better characterize the etiological agent, the host-parasite relationship, and the pathogenesis of infection, including the development of immunity to infection, (7) develop, implement, and evaluate more effective prevention and control strategies using a community-based approach based on personal protection and integrated pest-management, (8) educate health professionals and the public on primary prevention through personal protection and environmental interventions including the need for early and accurate diagnosis, and appropriate treatment.

Program Requirements

In conducting activities to achieve the purpose of this program, the recipient will be responsible for conducting selected activities under A., below, and CDC will be responsible for conducting activities under B., below:

A. Recipient Activities

All recipients must conduct activities either fully or selectively, depending upon the activities being supported, in collaboration and coordination with the Centers for Disease Control and Prevention (CDC).

1. Disease Surveillance and Epidemiological Studies

a. Implement, maintain, and evaluate an active Lyme disease surveillance system based on the 1990 (or subsequent) national case definition adopted by the Council of State and Territorial Epidemiologists (CSTE). Determine the utility of laboratory-based surveillance using standardized serologic tests for Lyme disease.

b. Conduct epidemiological studies, utilizing descriptive, correlative, analytical and seroepidemiological methods to better understand the epidemiology of the disease and to elucidate risk factors for infection and disease in specific geographic foci.

c. Carry out studies to measure the public health burden of Lyme disease and to determine the impact of various intervention strategies for primary and secondary prevention.

d. Conduct studies to identify human populations at high risk of infection and disease, and design studies to measure the costs and benefits of various intervention strategies, including behavior modification, integrated pest management, and vaccine use.

e. Conduct studies to identify and describe the emergence of Lyme disease in previously nonendemic regions.

2. Develop Improved Diagnostic Tests and Gain Understanding of the Pathogenesis of Infection With *B. burgdorferi*

a. Develop new and more specific and sensitive laboratory methods for Lyme disease diagnosis, including isolation of *B. burgdorferi* from clinical specimens, serology, antigen detection and polymerase chain reaction (PCR) assays.

b. When applicable, provide diagnostic test reagents, culture media, strains of *B. burgdorferi* or related organisms, human serum and other fluids and tissues, and other deliverables to CDC for the development of diagnostic tests, for vaccine development, and for the national reference collection.

3. Conduct Ecologic Studies, Develop and Evaluate Prevention/Control Strategies

a. Initiate ecological studies to define the enzootic cycle of *B. burgdorferi* by identifying tick vectors and vertebrate hosts, describing their population dynamics, and determining infection rates with *B. burgdorferi*. Identify potential behavioral and other personal risk factors for infection of humans and correlate these data with environmental factors.

b. Design, implement, and evaluate a community-based approach for the prevention and control of Lyme disease, including integrated pest management. The proposed method could include community participation, area or host-targeted acaracide treatment, alternative (non-toxic) acaracides, landscape modification, host management, biological control, etc.

c. Implementation of community-based integrated pest management pilot projects (IPM-PP) is encouraged, especially in areas of high periresidential risk.

d. Determine whether alternative vectors, e.g., *Amblyomma* spp., *Dermacentor* spp., and other person-biting ticks, transmit *B. burgdorferi* or other related organisms to humans.

4. Develop and Disseminate Disease Information

a. Provide information on the distribution of Lyme disease in the geographical area being served by the applicant; update these data annually, showing trends of incidence and other descriptive epidemiologic characteristics of the disease.

b. Develop informational materials for specific geographical areas on the ecology, prevention and control of Lyme disease.

c. Develop and publish information outlining practical methods to reduce vector tick densities, based on research in residential areas of high Lyme disease transmission.

d. Develop educational materials specifically for health care providers, in addition to materials for the lay public, on the early and appropriate diagnosis and management of Lyme disease, leading to secondary prevention.

e. Devise new and innovative methods and evaluation strategies to educate both medical and lay communities on Lyme disease, with special interest on populations at high risk. Such approaches may include, but are not limited to, interventions at the individual level, family level, community level, and at the county and state levels. Peer education approaches are encouraged.

B. CDC Activities

1. Provide technical assistance in the design and conduct of research.

2. Perform selected laboratory tests as outlined in proposals and agreed upon during negotiations.

3. Coordinate research activities among different recipient sites.

4. Participate in data management, the analysis of research data and the interpretation and presentation of research findings.

5. Review educational materials to ensure medical and scientific accuracy.

Evaluation Criteria for Proposals for Recipient Activity A.1. (Disease Surveillance and Epidemiological Studies), Recipient Activity A.2. (Improved Diagnostic Tests), and Recipient Activity A.3. (Ecologic Studies and Prevention/Control Strategies)

Applications will be reviewed and evaluated according to the following criteria: (Total 100 points)

1. The applicant's understanding of the purpose of the proposed activity and the feasibility of accomplishing the outcomes desired. (10 points)

2. The extent to which background information and other data demonstrate that the applicant has the appropriate organizational structure, administrative support, and ability to access appropriate target populations or study objects. (15 points)

3. The degree to which the proposed objectives are consistent with the defined purpose as defined in the "Purpose" section of this application and are specific, measurable, and time-phased. (20 points)

4. The degree to which the research plans will enable the applicant to achieve the stated objectives. (10 points)

5. The quality of the research methods and instruments to be used. (10 points)

6. The quality of the plan of operation for conducting the proposed activities and the degree to which the plan covers proposed activities outlined under "Recipient Activities" and specifies the who, what, where, how, and timing for the start and completion of each. (15 points)

7. The quality of the proposed methods for evaluating the project. (5 points)

8. The extent to which qualifications (including training and experience in work with Lyme disease) of project personnel, and the projected level of effort by each toward accomplishment of the proposed activities are described. (10 points)

9. The degree to which the proposal addresses one or more of the priority funding areas:

(a) Surveillance and epidemiological studies that target geographic areas of high endemicity/enzooticity and human populations at high risk (1 point);

(b) The development, implementation, and evaluation of community-based strategies of primary prevention and control, including methods for vector suppression and personal protection (2 points); and

(c) Laboratory-based research which focuses on development of standardized and improved diagnostic procedures, increased understanding of the pathogenesis of disease, and development of approaches to immunoprotection (2 points).

(A total of 5 points is possible in this criterion.)

10. The extent to which the budget is reasonable, clearly justified, and consistent with the intended use of cooperative agreement funds. (not scored)

Evaluation Criteria for Proposals for Recipient Activity A.4. (Development and Dissemination of Disease Information/Education)

Applications will be reviewed and evaluated according to the following criteria: (Total 100 points)

1. The applicant's understanding of the purpose of the proposed educational intervention/activity and the feasibility of accomplishing the outcomes desired. (15 points)

2. The extent to which background information and other data demonstrate that the applicant has the appropriate organizational structure, administrative support, and technical expertise to develop the proposed educational materials, and to access appropriate target populations. (15 points)

3. The degree to which the proposed objectives are consistent with the defined purpose as defined in the "Purpose" section of this application and are specific, measurable, and time-phased. (15 points)

4. The degree to which the research plans will enable the applicant to achieve the stated objectives. (10 points)

5. The quality of the research methods and instruments to be used. (10 points)

6. The quality of the plan of operation for conducting the proposed activities and the degree to which the plan covers proposed activities outlined under "Recipient Activities" and specifies the who, what, where, how, and timing for the start and completion of each. (15 points)

7. The quality of the proposed methods for evaluating the effectiveness of the developed materials, including the degree to which adequate pretesting on a representative sample of the

intended target population is described. (10 points)

8. The extent to which qualifications (including training and experience in work with Lyme disease) of project personnel, and the projected level of effort by each toward accomplishment of the proposed activities are described. (10 points)

9. The extent to which the budget is reasonable, clearly justified, and consistent with the intended use of cooperative agreement funds. (not scored)

Funding Priorities

Priority will be given to applications in the areas of surveillance and epidemiological studies that target geographic areas of high endemicity/enzooticity and human populations at high risk; to applications that relate to studies of community-based strategies of primary prevention and control, including methods for vector suppression and personal protection; to applications which focus on new and improved diagnostic tests which can be standardized; to research on the pathogenesis of disease, especially as related to development of immunoprotection and improved treatment of Lyme disease; and, to applications which focus on education of health care providers and evaluation of currently available educational materials.

Interested persons are invited to comment on the proposed funding priorities. All comments received on or before January 18, 1994, will be considered before the final funding priorities are established. If any funding priority should change as a result of any comments received, a revised Announcement will be published in the **Federal Register** prior to the final selection of awards.

Written comments should be addressed to: Edwin L. Dixon, Grants Management Officer, Grants Management Branch, Procurement and Grants Office, Centers for Disease Control and Prevention (CDC), 255 East Paces Ferry Road, NE., room 300, Mailstop E–18, Atlanta, Georgia 30305.

Executive Order 12372 Review

Applications are subject to Intergovernmental Review of Federal Programs as governed by Executive Order 12372. E.O. 12372 sets up a system for state and local government review of proposed Federal assistance applications. Applicants (other than federally-recognized Indian tribal governments) should contact their state Single Point of Contacts (SPOCs) as early as possible to alert them to the prospective applications and receive any necessary instructions on the state process. For proposed projects serving more than one state, the applicant is advised to contact the SPOC for each affected state. A current list of SPOCs is included in the application kit. If SPOCs have any state process recommendations on applications submitted to CDC, they should reference this Announcement—400 and forward recommendations to Edwin L. Dixon, Grants Management Officer, Grants Management Branch, Procurement and Grants Office, Centers for Disease Control and Prevention (CDC), 255 East Paces Ferry Road, NE., room 300, Mailstop E–18, Atlanta, Georgia 30305. The due date for state process recommendations is 30 days after the application deadline date for new and competing continuation awards (the seasonal nature of Lyme disease would not allow for an application receipt date which would accommodate the 60 day state recommendation process). A waiver has been requested for this 30-day process. CDC does not guarantee to "accommodate or explain" state process recommendations it receives after that date.

Public Health System Reporting Requirements

This program is subject to the Public Health System Reporting Requirements. Under these requirements, all community-based nongovernmental applicants must prepare and submit the items identified below to the head of the appropriate state and/or local health agency(s) in the program area(s) that may be impacted by the proposed project no later than the receipt date of the federal application. The appropriate state and/or local health agency is determined by the applicant. The following information must be provided:

a. A copy of the face page of the application (SF 424)

b. A summary of the project that should be titled "Public Health System Impact Statement" (PHSIS), not exceed one page, and include the following:

(1) A description of the population to be served

(2) A summary of the services to be provided

(3) A description of the coordination plans with the appropriate state and/or local health agencies.

If the state and/or local health official should desire a copy of the entire application, it may be obtained from the state Single Point of Contact (SPOC) or directly from the applicant.

Catalog of Federal Domestic Assistance Number

The Catalog of Federal Domestic Assistance Number is 93.942, Research, Treatment and Education Programs on Lyme Disease in the United States.

Other Requirements

Paperwork Reduction Act

Projects that involve collection of information from 10 or more individuals and funded by cooperative agreements will be subject to review by the Office of Management and Budget (OMB) under the Paperwork Reduction Act.

Human Subjects

If the proposed project involves research on human subjects, the applicant must comply with the Department of Health and Human Services Regulations (45 CFR part 46) regarding the protection of human subjects. Assurance must be provided which demonstrates that the project will be subject to initial and continuing review by an appropriate institutional review committee. The applicant will be responsible for providing evidence of this assurance in accordance with the appropriate guidelines and forms provided in the application kit.

Animal Subjects

If the proposed project involves research on animal subjects, the applicant must comply with the "PHS Policy on Humane Care and Use of Laboratory Animals to Awardee Institutions." An applicant organization proposing to use vertebrate animals in PHS-supported activities must file an Animal Welfare Assurance with the Office for the Protection from Research Risks at the National Institutes of Health.

Application Submission and Deadline

The original and two copies of the application form PHS 5161–1 (Revised 7–92, and approved by OMB under control number 0937–0189) must be submitted to Edwin L. Dixon, Grants Management Officer, Grants Management Branch, Procurement and Grants Office, Centers for Disease Control and Prevention, 255 East Paces Ferry Road, NE., room 300, Mailstop E–18, Atlanta, Georgia 30305, on or before January 31, 1994.

1. *Deadline:* Applications shall be considered as meeting the deadline if they are either:

a. Received on or before the deadline date; or

b. Sent on or before the deadline date and received in time for submission to the objective review group. (Applicants

must request a legibly dated U.S. Postal Service postmark or obtain a legibly dated receipt from a commercial carrier or the U.S. Postal Service. Private metered postmarks shall not be acceptable as proof of timely mailing.)

2. *Late Applications:* Applications which do not meet the criteria in 1.a. or 1.b. above are considered late applications. Late applications will not be considered in the current competition and will be returned to the applicant.

Where To Obtain Additional Information

A complete program description and information on application procedures are contained in the application package. Business management technical assistance may be obtained from Locke Thompson, Grants Management Specialist, Grants Management Branch, Procurement and Grants Office, Centers for Disease Control and Prevention, 255 East Paces Ferry Road, NE., room 300, Mailstop E-18, Atlanta, Georgia 30305, (404) 842-6595. Programmatic technical assistance may be obtained from David Dennis, M.D. or Duane Gubler, Sc.D., Division of Vector-Borne Infectious Diseases, National Center for Infectious Diseases, Centers for Disease Control and Prevention, Fort Collins, CO 80522, (303) 221-6400.

Please refer to Announcement Number 400 when requesting information and submitting an application.

Potential applicants may obtain a copy of "Healthy People 2000" (Full Report, Stock No. 017-001-00474-0) or "Healthy People 2000" (Summary Report, Stock No. 017-001-00473-1) referenced in the "Introduction" through the Superintendent of Documents, Government Printing Office, Washington, DC 20402-9325, telephone 202-783-3238.

Dated: December 10, 1993.

Robert L. Foster,

Acting Associate Director for Management and Operations, Centers for Disease Control and Prevention (CDC).

[FR Doc. 93-30646 Filed 12-15-93; 8:45 am]

BILLING CODE 4160-18-P

Establishment by the Advisory Committee on Immunization Practices of the List and Schedules of Pediatric Vaccines To Be Purchased and Administered Under the "Vaccines for Children Program"

AGENCY: Centers for Disease Control and Prevention (CDC), Public Health Service, Department of Health and Human Services (DHHS).

ACTION: Notice with comment period.

SUMMARY: At the request of the Chairman of the Advisory Committee on Immunization Practices (ACIP), the Centers for Disease Control and Prevention (CDC) is publishing for public comment the list of pediatric vaccines proposed by the ACIP to be purchased and administered under the Vaccines for Children Program, along with the proposed schedules for use of the vaccines, as mandated by the Omnibus Budget Reconciliation Act of 1993.

DATES: To be considered at the next meeting of the ACIP, written comments on the following list of pediatric vaccines and schedules for their use must be received on or before January 31, 1994.

ADDRESSES: Written comments should be submitted in duplicate to Ms. Gloria Kovach, Advisory Committee on Immunization Practices, Centers for Disease Control and Prevention (CDC), Mailstop A-20, 1600 Clifton Road, NE., Atlanta, Georgia 30333.

FOR FURTHER INFORMATION CONTACT: Copies of the Morbidity and Mortality Weekly Report (MMWR), which contain the ACIP publications cited in this Notice, can be found in medical libraries, or can be obtained by contacting: Ms. Gloria Kovach, Advisory Committee on Immunization Practices, Centers for Disease Control and Prevention (CDC), Mailstop A-20, 1600 Clifton Road, NE., Atlanta, Georgia 30333, (404) 639-3851.

SUPPLEMENTARY INFORMATION: At the request of the Chairman of the ACIP, Dr. Samuel Katz, the CDC is publishing the following for public comment:

The Omnibus Budget Reconciliation Act of 1993 (Pub. L. 103-66) under section 13631 established a new "Vaccines for Children Program." Under this program, which is found at new section 1928 of the Social Security Act, States can receive from the Federal Government sufficient vaccine to immunize a defined group of children (i.e., children who are Medicaid-eligible, who have no health insurance, or who are American Indians. In addition, children whose health insurance does not cover the cost of vaccines are eligible for the free vaccine if they receive their immunizations at a Federally-qualified health center (e.g., community health centers) or rural health clinic).

States must make this free vaccine available to: (1) All public and private health care providers who are authorized to administer the vaccine and who are willing to participate in the program and (2) all eligible children who seek such vaccine through a participating health care provider. Neither the State nor the providers may charge for the vaccine, although providers may charge a limited fee for the administration of the vaccine.

As provided under new sections 1928 (c)(2)(B)(i) and 1928 (e) of the Social Security Act, the ACIP is mandated to establish a list of vaccines for routine administration to children, along with schedules regarding the appropriate periodicity, dosage, and contraindications applicable to the pediatric vaccines. The Secretary, DHHS is required to purchase the pediatric vaccines on this list for use in the Vaccines for Children Program. In addition, health care providers who administer Federally-purchased vaccines obtained through this program are required to comply with the ACIP administration schedule, except in cases where, in the provider's medical judgment subject to accepted medical practice, compliance with the schedule is medically inappropriate.

The ACIP proposes to adopt as this list those pediatric vaccines which immunize children against the following diseases: Pertussis (whooping cough), diphtheria, tetanus, *Haemophilus influenzae* type b, measles, mumps, rubella, poliomyelitis, and hepatitis B.

The ACIP proposes that the following vaccines may be used for prevention of these diseases:

Diphtheria and Tetanus Toxoids with whole cell Pertussis Vaccine (DTP)
Diphtheria and Tetanus Toxoids with acellular Pertussis Vaccine (DTaP)
Diphtheria and Tetanus Toxoids (pediatric) (DT)
Tetanus and Diphtheria Toxoids (for children 7 years and older and adults) (Td)
Diphtheria and Tetanus Toxoids with whole cell Pertussis Vaccine combined with *Haemophilus Influenzae* b Conjugate Vaccine
Haemophilus Influenzae b Conjugate Vaccine (Hib)
Hepatitis B Vaccine
Hepatitis B Immune Globulin (HBIG) (for infants born to HBV carrier mothers)
Measles, Mumps, Rubella Combined Vaccine (MMR)
Measles and Rubella Combined Vaccine (MR)
Measles Vaccine
Mumps Vaccine
Rubella Vaccine
Oral Polio Vaccine (OPV)

Enhanced Inactivated Polio Vaccine (IPV)

The ACIP proposes the schedule in Table 1 for vaccination of all children to prevent the above listed diseases. Specifically, the recommended schedule for children includes 5 doses of DTP vaccine (or DTaP or combined DTP-Hib vaccine where appropriate) by school entry; 1 dose of Td vaccine given at 14–16 years of age; 4 doses of OPV by school entry (4 doses of IPV is an acceptable alternative); 3 or 4 doses of a Hib containing vaccine by age 2 years, depending on the specific vaccine (see Table 1); 2 doses of MMR vaccine; and 3 doses of hepatitis B vaccine. For children born to hepatitis B virus carrier mothers, a dose of HBIG should be given within 12 hours of birth, in addition to 3 doses of hepatitis B vaccine starting within 1 week of birth. For children with a contraindication to receiving pertussis vaccine, DT vaccine is recommended by the same schedule as DTP. Single antigen measles, mumps and rubella vaccines should be used only if there is a specific contraindication to one component of MMR vaccine, or the child is known to be immune or adequately vaccinated for one or more of these diseases, or measles vaccine is indicated for a child prior to one year of age (e.g., during outbreaks among preschool-age children).

The proposed schedule is further defined in the following ACIP recommendations regarding periodicity, dosage, and contraindications to these vaccines, except where the recommended schedule differs specifically (and has been superseded by) the vaccine schedule enumerated in Table 1:

Centers for Disease Control and Prevention (CDC). General Recommendations on Immunization. Recommendations of the Advisory Committee on Immunization Practices. MMWR 1993; 42 (in press).

Centers for Disease Control and Prevention (CDC). Diphtheria, Tetanus, Pertussis: Recommendations for Vaccine Use and Other Preventive Measures. Recommendations of the Advisory Committee on Immunization Practices (ACIP). MMWR 1991; 40 (No. RR–10); 1–28.

Centers for Disease Control and Prevention (CDC). Recommendations for Use of Haemophilus b Conjugate Vaccines and a Combined Diphtheria, Tetanus Pertussis, and *Haemophilus b* Vaccine. Recommendations of the Advisory Committee on Immunization Practices (ACIP). MMWR 1993; 42 (No. RR–13); 1–15.

Centers for Disease Control and Prevention (CDC). Hepatitis B Virus: A Comprehensive Strategy for Eliminating Transmission in the United States Through Universal Childhood Vaccination. Recommendations of the Immunization Practices Advisory Committee (ACIP). MMWR 1991; 40 (No. RR–13); 1–25.

Centers for Disease Control and Prevention (CDC). Measles Prevention: Recommendations of the Immunization Practices Advisory Committee (ACIP). MMWR 1989; 38 (No. S–9); 1–13.

Centers for Disease Control and Prevention (CDC). Recommendations of the Immunization Practices Advisory Committee (ACIP) Mumps Prevention. MMWR 1989; 38 (No. 22); 388–392,397–400.

Centers for Disease Control and Prevention (CDC). Pertussis Vaccination: Acellular Pertussis Vaccine for Reinforcing and Booster Use—Supplementary ACIP Statement. Recommendations of the Immunization Practices Advisory Committee (ACIP). MMWR 1992; 41 (No. RR–1); 1–10.

Centers for Disease Control and Prevention (CDC). Pertussis Vaccination: Acellular Pertussis Vaccine for the Fourth and Fifth Doses of the DTP Series: Update to Supplementary ACIP Statement: Recommendations of the Advisory Committee on Immunization Practices (ACIP). MMWR 1992; 41 (No. RR–15); 1–5.

Centers for Disease Control and Prevention (CDC). Recommendations of the Immunization Practices Advisory Committee (ACIP). Poliomyelitis Prevention. MMWR 1982; 31 (No. 3); 22–26,31–34.

Centers for Disease Control and Prevention (CDC). Recommendations of the Immunization Practices Advisory Committee (ACIP). Poliomyelitis Prevention: Enhanced-Potency Inactivated Poliomyelitis Vaccine—Supplementary Statement. MMWR 1987; 36; 795–798.

Centers for Disease Control and Prevention (CDC). Rubella Prevention. Recommendations of the Immunization Practices Advisory Committee (ACIP). MMWR 1990; 39 (No. RR–15); 1–18.

The ACIP invites written comments on the proposed list of childhood vaccines, and the proposed schedules regarding the appropriate periodicity, dosage and contraindications applicable to these vaccines as described in this notice and the referenced documents. The ACIP will consider all relevant comments received by January 31, 1994, during its regular meeting scheduled for February 23–24, 1994, at the Centers for Disease Control and Prevention (CDC), in Atlanta, Georgia.

Dated: December 10, 1993.

Walter R. Dowdle,

Deputy Director, Centers for Disease Control and Prevention (CDC).

TABLE 1.—RECOMMENDED SCHEDULE FOR ROUTINE ACTIVE IMMUNIZATION OF NORMAL INFANTS AND CHILDREN*

Vaccine	2 months +	4 months	6 months	12–15 months	15 months	4–6 years (before school entry)	14–16 years
DTP **	DTP	DTP	DTP		DTaP(DTP)***	DTaP(DTP)	Td.
OPV †	OPV	OPV	OPV ††			OPV	
MMR ¶				MMR		MMR ¶¶	
Hib							
A ‡	Hib	Hib	Hib	Hib #			
B ‡	Hib	Hib		Hib #			

Vaccine	At birth (before hospital discharge)	1–2 months	4 months	6–18 months
HepB **				
Option 1	Hepatitis B	Hepatitis B ‡		Hepatitis B ‡
Option 2		Hepatitis B ‡	Hepatitis B ‡	Hepatitis B ‡

DTP: Diphtheria, Tetanus, and Pertussis Vaccine. Combined DTP and Hib vaccines are also available.
DTaP: Diphtheria, Tetanus, and acellular Pertussis Vaccine
Td: Tetanus and Diphtheria toxoids for adult use
OPV: Live Oral Polio Vaccine

MMR: Measles, Mumps, and Rubella Vaccine
Hib: *Haemophilus influenzae* type b Conjugate Vaccine. Combined DTP and Hib vaccines are also available. Recommended schedules vary by manufacturer.
§ Schedule A: HbOC (Lederle Praxis) or PRP-T (Pasteur Merieux, distributed by SmithKline Beecham, and Connaught) or DTP-HbOC (Lederle Praxis)
§ Schedule B: PRP-OMP (Merck,Sharp&Dohme)
HepB: Hepatitis B Vaccine

* The recommended immunization schedule may vary for infants and children up to their seventh birthday who do not begin the vaccination series at the recommended times or who are more than one month behind in the immunization schedule (see General Recommendations on Immunization, MMWR 1993;42 (in press).
+ Can begin at 6 weeks of age.
** DT may be used in place of DTP when pertussis vaccine is contraindicated
*** This dose of DTP can be given as early as 12 months of age provided that the interval since the previous dose of DTP is at least 6 months. DTaP preparations are currently recommended only for use as the fourth and/or fifth doses of the DTP series among children ages 15 months through 6 years (before the seventh birthday). These vaccines may be given at 18 months.
† Enhanced Inactivated Polio Vaccine (IPV) may be substituted for OPV using a different schedule (see ACIP recommendations in MMWR 1987;36;795–798 for recommended schedule).
†† This dose of OPV may be given at 6–18 months of age.
¶ Single antigen measles, mumps and rubella vaccines should be used only if there is a specific contraindication to one component of MMR vaccine, or the child is known to be immune or adequately vaccinated for one or more of these diseases, or measles vaccine is indicated for a child prior to one year of age (e.g., during outbreaks among preschool-age children).
¶¶ This dose of MMR vaccine may be given at entry to middle school or junior high school.
# After the primary infant Hib conjugate vaccine series is completed, any licensed Hib conjugate vaccine may be used as a booster dose at age 12–15 months.
For infants born of HBsAg-negative mothers. Premature infants of HBsAg-negative mothers should receive the first dose of the hepatitis B vaccine series at the time of hospital discharge or when the other routine childhood vaccines are initiated. (All infants born of HBsAg-positive mothers should receive immunoprophylaxis for hepatitis B, including HBIG within 12 hours of birth and the first dose of hepatitis B vaccine, as soon as possible after birth (within one week), with the 2nd and third doses of vaccine given at 1 and 6 months of age)
‡ Hepatitis B vaccine may be given simultaneously with DTP (or DTaP or combined DTP-Hib vaccines), OPV (or IPV), MMR, and/or *Haemophilus influenzae* type b conjugate vaccine (Hib) at the same visit.
NOTE: Use of brand names in this table is not meant to mandate purchase of particular brands of vaccine, but merely notes different schedules if these vaccines are purchased.

[FR Doc. 93–30647 Filed 12–15–93; 8:45 am]
BILLING CODE 4160–18–P

DEPARTMENT OF HEALTH AND HUMAN SERVICES

National Institutes of Health

Notice of Establishment

Pursuant to the Federal Advisory Committee Act of October 6, 1972, (Pub. L. 92–463, 86 Stat. 770–776) and sections 222 and 404E of the Public Health Service Act, as amended (42 U.S. Code 217a and 283g), the Director, National Institutes of Health, announces the establishment by the Secretary, Department of Health and Human Services, of the Alternative Medicine Program Advisory Council.

The Alternative Medicine Program Advisory Council will advise the Secretary; the Assistant Secretary for Health; the Director, National Institutes of Health; and the Director, Office of Alternative Medicine, regarding the evaluation of alternative medical treatment modalities, including acupuncture and Oriental medicine, homeopathic medicine, and physical manipulation therapies.

Dated: December 7, 1993.

Harold Varmus,

Director, National Institutes of Health.

[FR Doc. 93–30725 Filed 12–15–93; 8:45 am]
BILLING CODE 4140–01–M

Substance Abuse and Mental Health Services Administration

Center for Substance Abuse Prevention; Meeting

Pursuant to Public Law 92–463, notice is hereby given of the meeting of the Substance Abuse Prevention Conference Review Committee of the Center for Substance Abuse Prevention for January, 1994.

The Substance Abuse Prevention Conference Review Committee will be performing review of applications for Federal assistance; therefore, a portion of this meeting will be closed to the public as determined by the Acting Administrator, SAMHSA, in accordance with 5 U.S.C. 552b(c)(6) and 5 U.S.C. app. 2 10(d).

A summary of the meeting and a roster of committee members may be obtained from Ms. D. Herman, Committee Management Officer, Center for Substance Abuse Prevention, Rockwall II Building, suite 630, 5600 Fishers Lane, Rockville, MD 20857 (Telephone: 301–443–4783).

Substantive program information may be obtained from the contact whose name, room number, and telephone number are listed below.

Committee Name: Substance Abuse Prevention Conference Review Committee.

Meeting Date(s): January 31–February 4, 1994.

Place: Residence Inn—Bethesda, 7335 Wisconsin Avenue, Bethesda, Maryland 20814.

Open: January 31, 1994, 8:30 a.m.–9:30 a.m.

Closed: Otherwise.

Contact: Ferdinand W. Hui, Ph.D., Rockwall II Building, Suite 630; Telephone: (301) 443–9912.

Dated: December 10, 1993.

Peggy W. Cockrill,

Committee Management Officer, Substance Abuse and Mental Health Services Administration.

[FR Doc. 93–30664 Filed 12–15–93; 8:45 am]
BILLING CODE 4162–20–M

DEPARTMENT OF THE INTERIOR

Bureau of Land Management

[CA–050–3110–10–B501, CACA–30108]

Realty Action; Exchange of Public and Private Lands in Colusa, Glenn, Lake, Solano, and Yolo Counties, CA

AGENCY: Bureau of Land Management, Interior.

ACTION: Notice of realty action: Exchange of public and private lands in Colusa, Glenn, Lake, Solano, and Yolo Counties in California.

SUMMARY: The following described public lands have been determined to be suitable for disposal by exchange to CAL–BLMX, INC., under section 206 of the Federal Land Policy and Management Act of 1976 (43 U.S.C. 1716).

Note: Not all of the lands identified below will be involved in the exchange. Some may

be deleted to eliminate possible conflicts that could arise during processing. A final selection of properties will be made to achieve comparable values between the offered and selected lands.

Selected Public Lands

Mount Diablo Meridian

T. 7 N., R. 2 W.
Sec. 19: SE¼.
Sec. 20: E½NW¼, SE¼.
Sec. 21: W½NW¼.
Sec. 27: NW¼NW¼.
T. 11 N., R. 2 W.
Sec. 30: NE¼SE¼.
Sec. 31: SE¼NE¼.
T. 11 N., R. 3 W.
Sec. 7: SE¼SW¼.
Sec. 17: W½SW¼.
Sec. 18: NE¼NW¼.
T. 12 N., R. 3 W.
Sec. 4: SW¼NE¼.
T. 13 N., R. 3 W.
Sec. 6: Lot 6, SE¼NE¼.
Sec. 20: NW¼SE¼.
Sec. 27: NW¼NE¼.
T. 22 N., R. 3 W.
Sec. 8: SE¼NE¼.
T. 12 N., R. 4 W.
Sec. 2: Lots 3, 4.
Sec. 3: Lot 1.
T. 13 N., R. 4 W.
Sec. 4: Lot 9.
Sec. 5: Lots 1, 2, NW¼SE¼, S½SE¼.
Sec. 6: Lot 1.
Sec. 15: SW¼SW¼.
Sec. 21: NE¼NW¼.
Sec. 22: S½SE¼.
Sec. 25: SE¼SW¼.
Sec. 26: W½SW¼.
Sec. 27: SE¼.
Sec. 34: NE¼, N½SE¼, SE¼SE¼.
Sec. 35: W½.
T. 14 N., R. 4 W.
Sec. 5: Lots 2, 3, 5, 6, 8–10, 13–15.
Sec. 8: Lots 3–6, W½NE¼.
Sec. 17: Lots 2, 3, 6, 7, N½SW¼, W½SE¼.
Sec. 20: N½NE¼, S½NW¼, SW¼SE¼.
Sec. 21: SW¼SW¼.
Sec. 29: W½E½.
Sec. 32: W½NE¼, N½SE¼, SE¼SE¼.
Sec. 33: NW¼, N½SW¼, SW¼SW¼.
T. 16 N., R. 4 W.
Sec. 30: NE¼SE¼.
T. 18 N., R. 4 W.
Sec. 20: E½SE¼.
T. 14 N., R. 5 W.
Sec. 26: SW¼SE¼.
Sec. 35: S½NE¼, SE¼NW¼, NE¼SE¼.
T. 16 N., R. 5 W.
Sec. 3: W½SW¼.
Sec. 4: Lots 1, 2, S½NE¼, SE¼.
Sec. 8: Lots 4, 9.
Sec. 9: E½W½, E½.
Sec. 10: W½SW¼.
Sec. 17: Lots 2, 7, 16.
Sec. 19: Lot 3.
Sec. 20: Lots 1, 9, 11, 15, 16.
Sec. 28: W½NW¼.
T. 17 N., R. 5 W.
Sec. 5: Lots 2, 3, SW¼SW¼.
Sec. 6: Lot 2.
Sec. 7: E½E½.
Sec. 8: NW¼, W½SW¼, N½SE¼.
Sec. 17: All.
Sec. 18: NE¼NE¼.
Sec. 19: SE¼SW¼, S½SE¼.
Sec. 20: E½SW¼, E½.
Sec. 28: W½, W½SE¼.
Sec. 29: E½, E½W½, SW¼NW¼, W½SW¼.
Sec. 30: Lots 1, 2, 4, E½, E½W½.
Sec. 31: Lot 1, E½, E½NW¼, NE¼SW¼.
Sec. 32: All.
Sec. 33: W½NE¼, W½, SW¼SE¼.
T. 18 N., R. 5 W.
Sec. 30: Lots 1–4.
T. 19 N., R. 5 W.
Sec. 7: Lot 2.
Sec. 18: SE¼SW¼.
Sec. 19: Lot 1, SE¼SW¼.
Sec. 20: SW¼NE¼.
Sec. 30: E½NW¼.
Sec. 31: Lot 5.
T. 16 N., T. 6 W.
Sec. 9: NW¼NE¼.
Sec. 10: S½NW¼.
Sec. 15: SW¼NE¼, W½NW¼, SW¼.
T. 17 N., R. 6 W.
Sec. 5: S½SW¼.
Sec. 6: Lots 6, 7, E½SW¼.
Sec. 8: W½NE¼, W½, SE¼.
Sec. 17: W½, W½E½, SE¼SE¼.
Sec. 21: W½W½, SE¼SW¼.
Sec. 25: SE¼SE¼.
Sec. 28: N½NW½, SW¼SW¼.
Sec. 33: S½NW¼, SW¼, W½SE¼, SE¼SE¼.
T. 18 N., R. 6 W.
Sec. 1: Lot 1.
Sec. 2: Lot 1, SE¼NE¼, E½SE¼.
Sec. 4: SW¼NW¼, W½SW¼.
Sec. 5: SE¼NE¼, NE¼SE¼.
Sec. 10: Lots 2, 3, 7.
Sec. 15: Lots 3, 6.
Sec. 22: Lots 11, 14.
Sec. 24: SE¼NE¼.
Sec. 25: S½NE¼, SE¼.
T. 19 N., R. 6 W.
Sec. 1: Lot 7.
Sec. 2: Lots 1, 2, E½SE¼.
Sec. 5: Lot 4, W½ Lot 5, W½ Lot 8, W½SW¼.
Sec. 6: Lot 10, E½SE¼.
Sec. 7: E½E½.
Sec. 8: NW¼NW¼, S½SW¼.
Sec. 11: NE¼SE¼.
Sec. 12: Lots 2–4.
Sec. 13: W½SW¼.
Sec. 17: NW¼, N½SW¼, SE¼SW¼.
Sec. 18: Lots 3–5, NE¼NE¼, SE¼SW¼.
Sec. 19: Lots 3–14, SW¼NE¼, E½SW¼, NW¼SE¼.
Sec. 20: SE¼SW¼, S½SE¼.
Sec. 21: SW¼SW¼.
Sec. 23: Lot 1, SW¼NE¼, SE¼NW¼, W½SE¼.
Sec. 24: Lots 2, 3, N½NW¼, SE¼NW¼, E½SW¼.
Sec. 25: Lots 1–4, NE¼NW¼, W½SW¼, SE¼SW¼.
Sec. 26: N½NE¼, E½SE¼.
Sec. 28: W½NW¼, N½SW¼.
Sec. 29: NE¼NE¼.
Sec. 30: Lots 1–8, E½SW¼, SW¼SE¼.
Sec. 31: Lots 1–5, E½W½, W½E½.
Sec. 33: S½NE¼, N½SE¼.
Sec. 34: W½SW¼.
T. 20 N., R. 6 W.
Sec. 7: Lot 3.
Sec. 10: SE¼NE¼.
Sec. 14: NW¼SE¼.
Sec. 15: E½NE¼, NE¼SE¼.
Sec. 20: E½SW¼.
Sec. 23: NE¼NW¼, SW¼SE¼.
Sec. 29: E½NW¼, SW¼SW¼.
Sec. 32: SW¼NW¼, W½SW¼.
T. 21 N., R. 6 W.
Sec. 6: Lots 4–7, 15, 16.
Sec. 7: Lots 5, 6.
Sec. 19: Lot 3.
T. 22 N., R. 6 W.
Sec. 31: Lots 2–4, SE¼NW¼.
T. 19 N., R. 7 W.
Sec. 12: W½, SW¼SE¼.
Sec. 13: All.
Sec. 24: All.
Sec. 25: All.
T 20 N., R 7 W.
Sec. 2: W½SE¼.
Sec. 11: NW¼NE¼.
Sec. 35: SW¼SE¼.

Portions of the following sections of public lands are unsurveyed. They will be offered for exchange pending completion of a survey.

T. 16 N., R. 5 W.
Sec. 4: W½.
Sec. 5: ALL.
Sec. 6: E½.
Sec. 8: W½NE¼, NW¼.

The following described public lands are encumbered by a Power Site Withdrawal 446, Public Land Order 3890. They will be offered for exchange pending revocation of withdrawal.

T. 19 N., R. 6 W.
Sec. 5: Lot 3, SE¼NW¼, NE¼SW¼.
Sec. 6: Lots 1, 2.
T. 20 N., R. 6 W.
Sec. 29: E½SW¼.
Sec. 31: SW¼NE¼, SE¼SW¼.
Sec. 32: E½NW¼.
T. 21 N., R. 6 W.
Sec. 7: Lot 16.
Sec. 18: Lots 5, 6, 15, 16.
Sec. 13: Lot 13.

The following described public lands were identified as suitable for disposal by exchange under CA–27838, published on January 31, 1991, in Volume 56, No. 21 of the **Federal Register**. These lands are now incorporated into this Notice of Realty Action CA–30108, which supersedes CA–27838.

T. 12 N., R. 5 W.
Sec. 17: E½SE¼.
Sec. 30: Lot 3.
T. 10 N., R. 6 W.
Sec. 19: SE¼SE¼.
T 11 N., R. 6 W.
Sec. 5: S½SW¼.
Sec. 6: SE¼SE¼.
T. 12 N. R. 6 W.
Sec. 1: SW¼SW¼.
Sec. 9: NE¼NE¼, S½NE¼.
Sec. 10: SE¼NW¼, E½SW¼.
Sec. 13: NE¼SW¼.
Sec. 14: N½S½, S½SW¼, SW¼SE¼.
Sec. 15: E½NW¼, SE¼NW¼, N½S½, SE¼SW¼, S½SE¼.
T. 12 N., R. 8 W.

Sec. 20: SE¼SW¼.
T. 14 N., R. 8 W.
Sec. 14: W½NE¼, N½NW¼, NW¼SE¼.
Sec. 26: NE¼SW¼.
T. 15 N., R. 9 W.
Sec. 9: SW¼SW¼.
Sec. 15: Lots 1–3, 6–8, 11–13.
T. 16 N., R. 9 W.
Sec. 31: N½NE¼.
Containing 25,000 acres more or less.

In exchange for these lands, the United States will acquire private lands which were identified in the Notice of Realty Action (NORA) for exchange, CA–27838, the Amendments to the NORA for exchange CA–27838, and future Notice of Realty Actions when published.

SUPPLEMENTARY INFORMATION: The purpose of the exchange is to acquire non-Federal lands contained wholly or partially in the Cache Creek Management Area in Lake, Colusa, Napa, and Yolo, Counties California. Acquiring the private land will help provide protection and management of the riparian habitat, primitive recreation values, wintering Bald Eagle habitat, Tule Elk habitat, significant cultural resources and other special resource values. Federal lands proposed for disposal in this exchange are generally isolated parcels surrounded by private lands with no public access. The proposed exchange will not be completed until all necessary reports and Environmental Assessment(s) are completed. Following the completion of mineral reports, the authorized officer will determine what, if any, mineral interest will be reserved to the United States. The exchange is consistent with the Bureau's planning for the lands involved and is in the public interest.

Lands to be transferred from the United States will be subject to the following reservations, terms, and conditions:

Reserving to the United States: A right-of-way thereon for ditches or canals constructed by the authority of the United States. Act of August 30, 1890 (43 U.S.C. 945).

Subject to: Oil and Gas Leases: CA–13644, CA–14694, CA–14699, CA–14701, CA–14703, CA–14704, SAC–069340, issued under the Mineral Leasing Act of 1920, as amended, and the United States reserves for duration of said leases unto itself all the rights of the lessors under said leases (including, without limitation, the right to collect royalties and extend the leases pursuant to its terms and applicable laws and regulations).

This exchange is made under section 29 of the Act of February 25, 1920, (30 U.S.C. 186), and the Act of March 4, 1933 (30 U.S.C. 124), and the patent will be issued subject to the rights of prior permittees or lessess to use so much of the surface of said land as is required for mining operations, without compensation to the patentee for damages resulting from proper mining operations, for the duration of oil and gas leases and any authorized extensions of those leases.

Rights-of-Way:

CA–10902, granted to F.G. Huffmaster for an access road.

CA–10238, granted to Department of Water Resources for an access road.

CA–14470, granted to Department of Public Works, Lake County for an access road.

CA–14669, granted to Pacific Gas and Electric Company for a transmission line.

CA–15865, granted to Homestake Mining Company for water well site purposes.

CA–19384, granted to AT&T Company for telephone line.

SAC–033717, granted to Pacific Gas and Electric Company for a transmission line.

SAC–58701, granted to the California Department of Transportation for a mineral material site.

Grazing Leases:

Grazing Lease No. 3098, issued to Richard M. & Jon I. Richter.

Grazing Lease No. 3084, issued to Caldeer, Inc.

Grazing privileges will continue for 2 years from the official notification date or until a signed waiver of the 2-year notification is received by the Bureau of Land Management from the grazing lessee. If waived, the grazing privileges will not be continued by the Bureau of Land Management.

Publication of this notice in the **Federal Register** shall segregate the public lands from operation of the public land laws and the mining laws, but not the mineral leasing laws. This segregative effect shall terminate upon issuance of patent, or two (2) years from the date of publication of this notice in the **Federal Register**, whichever occurs first. This action is necessary to eliminate conflicting encumbrances on the public lands during exchange processing.

FOR FURTHER INFORMATION CONTACT: The Clear Lake Resource Area Manager, Bureau of Land Management, 555 Leslie Street, Ukiah, California.

DATE: On or before January 31, 1994, interested parties may submit comments to the BLM, Clear Lake Resource Area Manager, at the address shown above. Comments should specify the legal description (township, range, section, and subsection) of the specific parcel affected by the comment. Any adverse comments will be evaluated by the Bureau which may sustain, vacate, or modify this realty action. The State Director will issue a final determination. In the absence of any adverse comments, this action will become the final determination of the Department of the Interior.

Renee Snyder,
Clear Lake Resource Area Manager.

[FR Doc. 93–30648 Filed 12–15–93; 8:45 am]

BILLING CODE 4310–40–M

National Park Service

Palo Alto Battlefield National Historic Site, Texas; Intent To Prepare an Environmental Impact Statement

AGENCY: National Park Service, DOI.

ACTION: Notice of intent to prepare an Environmental Impact Statement for the General Management Plan, Palo Alto Battlefield National Historic Site, Texas.

SUMMARY: The National Park Service will prepare a General Management Plan (GMP) and an Environmental Impact Statement (EIS) for Palo Alto Battlefield National Historic Site, Brownsville, Texas, in accordance with section 102(2)(C) of the National Environmental Policy Act of 1969 and Public Law 102–304, Palo Alto Battlefield National Historic Site Act of 1991. The act established a 3,400-acre site on June 23, 1992, to preserve the nationally significant site of the first battle of the Mexican-American war and to provide for its interpretation in such a manner as to portray the battle and the Mexican-American War and its related political, diplomatic, military and social causes and consequences. Palo Alto Battlefield National Historic Site is the only unit in the National Park System directed to the preservation and interpretation of resources related to the Mexican-American War.

The planning effort will result in a comprehensive GMP that encompasses preservation of natural and cultural resources, visitor use and interpretation, roads, and facilities. In cooperation with local communities, attention will also be given to resources outside the boundary that affect the integrity of the park. Alternatives to be considered include no action, the preferred alternative, and a full range of alternatives addressing issues identified during public scoping.

Principal topics to be covered in the GMP are management zoning, boundaries, carrying capacity, visitor use, access and circulation, development including utilities, natural

and cultural resources, and the relationship to other Mexican-American War properties.

The GMP will also include a research plan and identification of appropriate cooperative agreements for implementation of the GMP. Detailed costs and priorities for development and staffing will also be included. The life of the GMP will be 15 years.

A scoping brochure has been prepared that details the issues identified to date. Copies of that information can be obtained by calling the park at 210–548–2788 or writing to Palo Alto Battlefield National Historic Site, Post Office Drawer 1832, Brownsville, Texas 78522.

The public is encouraged to send written comments and suggestions concerning preparation of the GMP/EIS to the address above by February 15, 1994.

FOR FURTHER INFORMATION: Contact Superintendent, Palo Alto Battlefield National Historic Site, 210–548–2788.

Dated: December 1, 1993.

Mary R. Bradford,

Regional Director, Southwest Region.

[FR Doc. 93–30671 Filed 12–15–93; 8:45 am]

BILLING CODE 4310–70–M

Gettysburg National Military Park Advisory Commission

AGENCY: Gettysburg National Military Park Advisory Commission, National Park Service, Interior.

ACTION: Notice of meeting.

SUMMARY: This notice sets forth the date of the tenth meeting of the Gettysburg National Military Park Advisory Commission.

Date: January 27, 1994.

Time: 7 p.m.–9 p.m.

Inclement Weather Reschedule Date: None.

Address: Gettysburg Hotel, One Lincoln Square, Gettysburg, Pennsylvania 17325.

Agenda: Sub-Committee Reports, review of final Land Protection Plan, briefings on Resource Management Plan, Eisenhower Barn reconstruction, Federal Highway project, Fiscal 94 park budget, Clean Cities Project, and an operational update on park activities.

For Further Information Contact: Jose A. Cisneros, Superintendent, Gettysburg National Military Park, P.O. Box 1080, Gettysburg, Pennsylvania 17325.

Supplementary Information: The meeting will be open to the public. Any member of the public may file with the Commission a written statement concerning agenda items. The statement should be addressed to the Advisory Commission, Gettysburg National Military Park, P.O. Box 1080, Gettysburg, Pennsylvania 17325. Minutes of the meeting will be available for inspection four weeks after the meeting at the permanent headquarters of the Gettysburg National Military Park located at 95 Taneytown Road, Gettysburg, Pennsylvania 17325.

Charles P. Clapper, Jr.,

Deputy Regional Director, Mid-Atlantic Region.

[FR Doc. 93–30669 Filed 12–15–93; 8:45 am]

BILLING CODE 4310–70–M

Meeting of the National Park System Advisory Board

AGENCY: National Park Service, Department of the Interior.

ACTION: Notice of meeting of National Park System Advisory Board.

Notice is hereby given in accordance with the Federal Advisory Committee Act, 5 U.S.C. Appendix, that a meeting of the National Park System Advisory Board will be held on Wednesday, January 12, 1994 in room 5622, Main Interior Building, 1849 C Street, NW., Washington, DC. The meeting will convene at 1 p.m. and conclude that afternoon.

After opening remarks, the Board's primary agenda item will be the formulation of review comments on the National Park Service's Draft General Management Plan Amendment for the Presidio of San Francisco. The Board may be addressed by officials of the Department of the Interior and/or the National Park Service. Other miscellaneous topics and reports may also be covered, including possible guidance to the Board on other matters under their review.

The meeting will be open to the public. Space and facilities to accommodate members of the public are limited and persons will be accommodated on a first-come, first-served basis. Anyone may file with the Board a written statement concerning matters to be discussed. The Chairman may also permit attendees to address the Board, but may restrict the length of presentations as necessary to allow the Board to complete its agenda that afternoon.

Persons wishing further information concerning the meeting, or who wish to submit written statements, may contact Mr. David L. Jervis, Office of Policy, National Park Service, P.O. Box 37127, Washington, DC 20013–7127 (telephone 202–208–4030).

Draft minutes of the meeting will be available for public inspection about 8 weeks after the meeting, in room 1220, Main Interior Building, 1849 C Street, NW., Washington, DC.

John J. Reynolds,

Deputy Director.

[FR Doc. 93–30670 Filed 12–15–93; 8:45 am]

BILLING CODE 4310–70–P

INTERNATIONAL TRADE COMMISSION

[Investigation No. 337–TA–344]

Certain Cutting Tools for Flexible Plastic Conduit and Components Thereof; Issuance of Limited Exclusion Order and Cease and Desist Order

AGENCY: U.S. International Trade Commission.

ACTION: Notice.

SUMMARY: Notice is hereby given that the U.S. International Trade Commission has issued a limited exclusion order and a cease and desist order in the above-captioned investigation.

FOR FURTHER INFORMATION CONTACT: Robin L. Turner, Esq., Office of the General Counsel, U.S. International Trade Commission, 500 E Street, SW., Washington, DC 20436, telephone 202–205–3103.

SUPPLEMENTARY INFORMATION: The authority for the Commission's determination is contained in section 337 of the Tariff Act of 1930, as amended (19 U.S.C. 1337), and in § 210.58 of the Commission's Interim Rules of Practice and Procedure (19 CFR 210.58).

Dawn Industries, Inc., Dextel Inc., and Duane Robertson (herein collectively "Dawn Industries") filed a complaint on October 30, 1992, under section 337 of the Tariff Act of 1930 (19 U.S.C. 1337) alleging that two respondents: (1) Pro Mark, Inc. ("Pro Mark"), and (2) Orbit Underground, d/b/a Orbit Sprinklers, had violated section 337 in the importation into the United States, the sale for importation, or the sale within the United States after importation of certain cutting tools for flexible plastic conduit or components thereof. The cutting tools were alleged to infringe claims 1–7 of U.S. Letters Patent 4,336,652 (the '652 patent) and the single claim of U.S. Letters Patent Des. 266,736 (the '736 patent). The Commission instituted this investigation by notice published in the **Federal Register** on December 2, 1992, at 57 FR 57075–76. The Commission terminated Orbit Underground as a respondent by notice published on March 3, 1993, at 58 FR 12253, added an additional respondent, Chewink Corporation ("Chewink"), by notice published on March 25, 1993, at 58 FR 16203, and deleted the claim of infringement of the '736 patent by notice published on April 26, 1993, at 58 FR 21994. The Commission found, pursuant to Commission interim rule 210.25, that respondent Chewink had waived its

right to appear, to be served with documents, and to contest the allegations at issue in this investigation by notice published on August 25, 1993, at 58 FR 44850–51.

On September 2, 1993, the presiding administrative law judge (ALJ) issued his final ID finding that there was a violation of section 337. The ALJ found that claim 1 of the '652 patent was infringed, but that claims 2 and 7 of that patent were not infringed. The ALJ also found that a domestic industry existed with respect to the claims in issue. On October 20, 1993, the Commission determined not to review the ID, which thereby became the determination of the Commission. The Commission also requested written submissions concerning the issues of remedy, the public interest, and bonding. 58 FR 57837 (October 27, 1993).

On December 2, 1993, the Commission made its determinations on the issues of remedy, the public interest, and bonding. The Commission determined that the appropriate form of relief is a limited exclusion order prohibiting the importation of infringing cutting tools for flexible plastic conduit. The Commission further determined to issue a cease and desist order directed to domestic respondent Pro Mark, Inc. Finally, the Commission determined that the public interest factors enumerated in 19 U.S.C. 1337 (d), (f), and (g) do not preclude the issuance of the aforementioned relief, and that the bond during the Presidential review period shall be in the amount of 120 percent of the entered value of the infringing cutting tools.

Copies of the Commission orders, the Commission opinion in support thereof, and all other nonconfidential documents filed in connection with this investigation are or will be available for inspection during official business hours (8:45 a.m. to 5:15 p.m.) in the Office of the Secretary, U.S. International Trade Commission, 500 E Street, SW., Washington, DC 20436, telephone 202–205–2000. Hearing-impaired persons are advised that information on the matter can be obtained by contacting the Commission's TDD terminal on 202–205–1810.

Issued: December 3, 1993.

By order of the Commission.

Donna R. Koehnke,

Secretary.

[FR Doc. 93–30639 Filed 12–15–93; 8:45 am]

BILLING CODE 7020–02–P

[Investigation No. 337–TA–362]

Certain Methods of Assembling Plastic Ball Valves and Components Thereof; Investigation

AGENCY: International Trade Commission.

ACTION: Institution of investigation pursuant to 19 U.S.C. 1337.

SUMMARY: Notice is hereby given that a complaint was filed with the U.S. International Trade Commission on November 8, 1993, under section 337 of the Tariff Act of 1930, as amended, 19 U.S.C. 1337, on behalf of Measurement and Flow Control Holding Co., Inc., 1105 North Market Street, suite 1300, Wilmington, Delaware 19899 and Nordstrom Valves, Inc., 1511 Jefferson Street, Sulphur Springs, Texas 75482. A letter supplementing the complaint was filed on December 1, 1993. The complaint, as supplemented, alleges violations of section 337 in the importation into the United States, the sale for importation, and the sale within the United States after importation of certain plastic ball valves and components thereof, alleged to be manufactured abroad by a method covered by claims 1, 2, 3, and 15 of U.S. Letters Patent 4,047,275, and that there exists an industry in the United States as required by subsection (a)(2) of section 337.

The complainants request that the Commission institute an investigation and, after a hearing, issue a permanent exclusion order and permanent cease and desist orders.

A motion for expedited relief was filed with the complaint in which complainants request an expedited hearing on permanent relief and determination on the merits. The Commission makes no ruling upon this motion. The scheduling of the hearing in a section 337 investigation is within the discretion of the administrative law judge assigned to the investigation.

ADDRESSES: The complaint, except for any confidential information contained therein, is available for inspection during official business hours (8:45 a.m. to 5:15 p.m.) in the Office of the Secretary, U.S. International Trade Commission, 500 E Street, SW., room 112, Washington, DC 20436, telephone 202–205–1802. Hearing-impaired individuals are advised that information on this matter can be obtained by contacting the Commission's TDD terminal on 202–205–1810.

FOR FURTHER INFORMATION CONTACT: T. Spence Chubb, Esq., Office of Unfair Import Investigations, U.S. International Trade Commission, telephone 202–205–2575.

AUTHORITY: The authority for institution of this investigation is contained in section 337 of the Tariff Act of 1930, as amended, and in § 210.12 of the Commission's Interim Rules of Practice and Procedure, 19 CFR 210.12.

SCOPE OF INVESTIGATION: Having considered the complaint, the U.S. International Trade Commission, on December 6, 1993, ordered that—

(1) Pursuant to subsection (b) of section 337 of the Tariff Act of 1930, as amended, an investigation be instituted to determine whether there is a violation of subsection (a)(1)(B) of section 337 in the importation into the United States, the sale for importation, or the sale within the United States after importation of certain plastic ball valves and components thereof alleged to be made abroad by a method covered by claims 1, 2, 3, or 15 of U.S. Letters Patent 4,047,275, and whether there exists an industry in the United States as required by subsection (a)(2) of section 337.

(2) For the purpose of the investigation so instituted, the following are hereby named as parties upon which this notice of investigation shall be served:

(a) The complainants are—

Measurement and Flow Control Holding Co., Inc. 1105 North Market Street, suite 1300, Wilmington, Delaware 19899

Nordstrom Valves, Inc., 1511 Jefferson Street, Sulphur Springs, Texas 75482

(b) The respondents are the following companies alleged to be in violation of section 337, and are the parties upon which the complaint is to be served:

Natural Gas Products Co., 3970 Washington Road, Canonsburg, Pennsylvania 15317

Friatec AG, Sparte Technishe Kunstoffe, Steinzeugstrasse D68229, Mannheim, Germany

M.T. Deason, Inc., 3016 Commerce Square So., Birmingham, Alabama 35210

Power and Process, Inc., P.O. 7117, 1168 Farmington Avenue, Kensington, Connecticut 06037

(c) T. Spence Chubb, Esq., Office of Unfair Import Investigations, U.S. International Trade Commission, 500 E Street, SW., room 401–E, Washington, DC 20436, who shall be the Commission investigative attorney, party to this investigation; and

(3) For the investigation so instituted, Janet D. Saxon, Chief Administrative Law Judge, U.S. International Trade Commission, shall designate the presiding administrative law judge.

Responses to the complaint and the notice of investigation must be submitted by the named respondents in accordance with § 210.21 of the Commission's Interim Rules of Practice and Procedure, 19 CFR 210.21. Pursuant to §§ 201.16(d) and 210.21(a) of the Commission's Rules, 19 CFR 201.16(d) and 210.21(a), such responses will be considered by the Commission if received not later than 20 days after the date of service of the complaint. Extensions of time for submitting responses to the complaint will not be granted unless good cause therefor is shown.

Failure of a respondent to file a timely response to each allegation in the complaint and in this notice may be deemed to constitute a waiver of the right to appear and contest the allegations of the complaint and this notice, and to authorize the administrative law judge and the Commission, without further notice to the respondent, to find the facts to be as alleged in the complaint and this notice and to enter both an initial determination and a final determination containing such findings, and may result in the issuance of a limited exclusion order or a cease and desist order or both directed against such respondent.

By order of the Commission.

Issued: December 8, 1993.

Donna R. Koehnke,

Secretary.

[FR Doc. 93-30640 Filed 12-15-93; 8:45 am]

BILLING CODE 7020-02-P

[Investigations Nos. 303-TA-24 (Preliminary), 701-TA-357-358 (Preliminary), and 731-TA-664-668 (Preliminary)]

Phthalic Anhydride From Brazil, Hungary, Israel, Mexico, and Venezuela

Determinations

On the basis of the record [1] developed in the subject investigations, the Commission determines,[2] pursuant to sections 303 and 733(a) of the Tariff Act of 1930 (19 U.S.C. 1303 and 1673b(a)), that there is a reasonable indication that an industry in the United States is threatened with material injury by reason of allegedly subsidized and less-than-fair-value (LTFV) imports from Venezuela of phthalic anhydride,[3] provided for in subheading 2917.35.00 of the Harmonized Tariff Schedule of the United States. The Commission also determines, pursuant to sections 703(a) and 733(a) of the Tariff Act of 1930 (19 U.S.C. 1671b(a) and 1673b(a)), that there is no reasonable indication that an industry in the United States is materially injured or threatened with material injury by reason of allegedly subsidized and/or LTFV imports from Brazil, Hungary, Israel, and Mexico.[4]

Background

On October 22, 1993, petitions were filed with the Commission and the Department of Commerce by Aristech Chemical Corporation, Pittsburgh, PA; BASF Corporation, Parsippany, NJ; Koppers Industries, Inc., Pittsburgh, PA; and, Stepan Chemical Company, Northfield, IL, alleging that an industry in the United States is materially injured and threatened with material injury by reason of subsidized imports of phthalic anhydride from Brazil, Israel, Mexico, and Venezuela and LTFV imports from Brazil, Hungary, Israel, Mexico, and Venezuela. Accordingly, effective October 22, 1993, the Commission instituted countervailing duty and antidumping investigations Nos. 303-TA-24 (Preliminary), 701-TA-356-358 (Preliminary), and 731-TA-664-668 (Preliminary). Effective November 18, 1993, Commerce initiated countervailing duty and antidumping investigations with respect to all subject countries, except the countervailing duty investigation for subject imports from Brazil. Therefore, the Commission terminated its countervailing duty investigation involving subject imports from Brazil, investigation No. 701-TA-356 (Preliminary).

Notice of the institution of the Commission's investigations and of a public conference to be held in connection therewith was given by posting copies of the notice in the Office of the Secretary, U.S. International Trade Commission, Washington, DC, and by publishing the notice in the **Federal Register** of November 1, 1993, (58 FR 58347). The conference was held in Washington, DC, on November 15, 1993, and all persons who requested the opportunity were permitted to appear in person or by counsel.

By order of the Commission.

Issued: December 8, 1993.

Donna R. Koehnke,

Secretary.

[FR Doc. 93-30641 Filed 12-15-93; 8:45 am]

BILLING CODE 7020-02-P

[Investigations Nos. 731-TA-646-648 (Final)]

Certain Steel Wire Rod From Brazil, Canada, and Japan

AGENCY: International Trade Commission.

ACTION: Institution and scheduling of final antidumping investigations.

SUMMARY: The Commission hereby gives notice of the institution of final antidumping investigations Nos. 731-TA-646-648 (Final) under section 735(b) of the Tariff Act of 1930 (19 U.S.C. § 1673d(b)) (the Act) to determine whether an industry in the United States is materially injured, or is threatened with material injury, or the establishment of an industry in the United States is materially retarded, by reason of imports from Brazil, Canada, and Japan of certain steel wire rod,[1] provided for in subheadings 7213.31.30, 7213.31.60, 7213.39.00, 7213.41.30, 7213.41.60, 7213.49.00, 7213.50.00, and 7227.90.60 of the Harmonized Tariff Schedule of the United States.

For further information concerning the conduct of these investigations, hearing procedures, and rules of general application, consult the Commission's Rules of Practice and Procedure, part 201, subparts A through E (19 CFR part 201), and part 207, subparts A and C (19 CFR part 207).

EFFECTIVE DATE: November 26, 1993.

---

[1] The record is defined in § 207.2(f) of the Commission's Rules of Practice and Procedure (19 CFR 207.2(f)).

[2] Chairman Newquist, Commissioner Brunsdale and Commissioner Crawford dissenting.

[3] As defined by Commerce, phthalic anhydride (PAN) is an aromatic synthetic organic chemical usually produced from a primary petrochemical called orthoxylene, although it is sometimes produced from naphthalene. PAN is predominantly used in the production of plasticizers, unsaturated polyester resins, and alkyd resins, which in turn are generally used to produce plastics and paints. The subject PAN is produced in two physical forms, molten and flaked.

[4] Vice Chairman Watson and Commissioner Nuzum voted in the affirmative with respect to Brazil; Commissioner Nuzum voted in the affirmative with respect to Israel; and, Commissioner Rohr and Commissioner Nuzum voted in the affirmative with respect to Mexico.

[1] For purposes of these investigations, certain steel wire rod is defined as hot-rolled carbon steel and alloy steel wire rod, in irregularly wound coils, of approximately round cross section, between 3.8 mm (0.20 inch) and 19.0 mm (0.75 inch) in diameter. Excluded from the scope of these investigations is steel wire rod 5.5 mm or less in diameter, with tensile strength greater than or equal to 1040 MPa, and having the following chemical content, by weight: Carbon greater than or equal to 0.79 percent, aluminum less than or equal to 0.005 percent, phosphorus plus sulfur less than or equal to 0.04 percent, and nitrogen less than or equal to 0.006 percent (termed "1080 tire cord" quality wire rod). Also excluded are wire rods of free-machining steel containing 0.03 percent or more of lead, 0.05 percent or more of bismuth, 0.08 percent or more of sulfur, more than 0.4 percent of phosphorus, more than 0.05 percent of selenium, and/or more than 0.01 percent of tellurium. Excluded as well are stainless steel rods, tool steel rods, free-cutting steel rods, resulfurized steel rods, ball bearing steel rods, high-nickel steel rods, and concrete reinforcing bars and rods.

FOR FURTHER INFORMATION CONTACT: Brad Hudgens (202–205–3189), Office of Investigations, U.S. International Trade Commission, 500 E Street SW., Washington, DC 20436. Hearing-impaired persons can obtain information on this matter by contacting the Commission's TDD terminal on 202–205–1810. Persons with mobility impairments who will need special assistance in gaining access to the Commission should contact the Office of the Secretary at 202–205–2000.

SUPPLEMENTARY INFORMATION:

Background

These investigations are being instituted as a result of an affirmative preliminary determination by the Department of Commerce that imports of certain steel wire rod from Brazil, Canada, and Japan are being sold in the United States at less than fair value within the meaning of section 733 of the Act (19 U.S.C. 1673b). The investigations were requested in a petition filed on April 23, 1993, by Connecticut Steel Corp., Wallingford, CT; North Star Steel Texas, Inc., Beaumont, TX (except for the investigation concerning Japan); Keystone Steel & Wire Corp., Peoria, IL; Co-Steel Raritan, Perth Amboy, NJ (except for the investigation concerning Brazil); and Georgetown Steel Corp., Georgetown, SC (except for the investigation concerning Japan).

Participation in the Investigations and Public Service List

Persons wishing to participate in the investigations as parties must file an entry of appearance with the Secretary to the Commission, as provided in § 201.11 of the Commission's rules, not later than twenty-one (21) days after publication of this notice in the **Federal Register**. The Secretary will prepare a public service list containing the names and addresses of all persons, or their representatives, who are parties to these investigations upon the expiration of the period for filing entries of appearance.

Limited Disclosure of Business Proprietary Information (BPI) Under an Administrative Protective Order (APO) and BPI Service List

Pursuant to section 207.7(a) of the Commission's rules, the Secretary will make BPI gathered in these final investigations available to authorized applicants under the APO issued in the investigations, provided that the application is made not later than twenty-one (21) days after the publication of this notice in the **Federal Register**. A separate service list will be maintained by the Secretary for those parties authorized to receive BPI under the APO.

Staff Report

The prehearing staff report in these investigations will be placed in the nonpublic record on February 2, 1994, and a public version will be issued thereafter, pursuant to § 207.21 of the Commission's rules.

Hearing

The Commission will hold a hearing in connection with these investigations beginning at 9:30 a.m. on February 15, 1994, at the U.S. International Trade Commission Building. Requests to appear at the hearing should be filed in writing with the Secretary to the Commission on or before February 3, 1994. A nonparty who has testimony that may aid the Commission's deliberations may request permission to present a short statement at the hearing. All parties and nonparties desiring to appear at the hearing and make oral presentations should attend a prehearing conference to be held at 9:30 a.m. on February 8, 1994, at the U.S. International Trade Commission Building. Oral testimony and written materials to be submitted at the public hearing are governed by §§ 201.6(b)(2), 201.13(f), and 207.23(b) of the Commission's rules. Parties are strongly encouraged to submit as early in the investigations as possible any requests to present a portion of their hearing testimony *in camera*.

Written Submissions

Each party is encouraged to submit a prehearing brief to the Commission. Prehearing briefs must conform with the provisions of § 207.22 of the Commission's rules; the deadline for filing is February 9, 1994. Parties may also file written testimony in connection with their presentation at the hearing, as provided in § 207.23(b) of the Commission's rules, and posthearing briefs, which must conform with the provisions of § 207.24 of the Commission's rules. The deadline for filing posthearing briefs is February 24, 1994; witness testimony must be filed no later than three (3) days before the hearing. In addition, any person who has not entered an appearance as a party to the investigations may submit a written statement of information pertinent to the subject of the investigations on or before February 24, 1994. All written submissions must conform with the provisions of § 201.8 of the Commission's rules; any submissions that contain BPI must also conform with the requirements of §§ 201.6, 207.3, and 207.7 of the Commission's rules.

In accordance with §§ 201.16(c) and 207.3 of the rules, each document filed by a party to the investigations must be served on all other parties to the investigations (as identified by either the public or BPI service list), and a certificate of service must be timely filed. The Secretary will not accept a document for filing without a certificate of service.

Authority: These investigations are being conducted under authority of the Tariff Act of 1930, title VII. This notice is published pursuant to § 207.20 of the Commission's rules.

By order of the Commission.

Issued: December 7, 1993.

Donna R. Koehnke,

Secretary.

[FR Doc. 93–30642 Filed 12–15–93; 8:45 am]

BILLING CODE 7020–02–P

INTERSTATE COMMERCE COMMISSION

[Docket No. AB–167; Sub-No. 1131X]

Consolidated Rail Corp.; Abandonment Exemption; in Mahoning County, OH

Consolidated Rail Corporation (Conrail) has filed a notice of exemption under 49 CFR part 1152 subpart F—*Exempt Abandonments* to abandon its .96-mile line of railroad known as the Canfield Industrial Track from milepost 0.0 at the beginning of the line, to milepost 0.96 in Youngstown, Mahoning County, OH.

Conrail has certified that: (1) No local traffic has moved over the line for at least 2 years; (2) any overhead traffic has been rerouted over other lines; and (3) no formal complaint filed by a user of rail service on the line (or by a State or local government entity acting on behalf of such user) regarding cessation of service over the line either is pending with the Commission or with any U.S. District Court or has been decided in favor of the complainant within the 2-year period; and (4) the requirement at 49 CFR 1152.50(d)(1) (notice to government agencies), 49 CFR 1105.7 (environmental reports), 49 CFR 1105.8 (historic report), 49 CFR 1105.11 (transmittal letter), and 49 CFR 1105.12 (newspaper publication) have been met.

As a condition to use of this exemption, any employee affected by the abandonment shall be protected under *Oregon Short Line R. Co.—Abandonment—Goshen*, 360 I.C.C. 91 (1979). To address whether this condition adequately protects affected employees, a petition for partial

revocation under 49 U.S.C. 10505(d) must be filed.

Provided no formal expressions of intent to file an offer of financial assistance (OFA) has been received, this exemption will be effective on January 15, 1994, unless stayed pending reconsideration. Petitions to stay that do not involve environmental issues,[1] formal expressions of intent to file an OFA under 49 CFR 1152.27(c)(2),[2] and trail use/rail banking statements under 49 CFR 1152.29 must be filed by December 27, 1993.[3] Petitions to reopen or requests for public use conditions under 49 CFR 1152.28 must be filed by January 5, 1994, with: Office of the Secretary, Case Control Branch, Interstate Commerce Commission, Washington, DC 20423.

A copy of any pleading filed with the Commission should be sent to applicant's representative: Robert S. Natalini, Consolidated Rail Corporation, Two Commerce Square, 2001 Market Street, P.O. Box 41416, Philadelphia, PA 19101–1416.

If the notice of exemption contains false or misleading information, the exemption is void *ab initio*.

Conrail has filed an environmental report which addresses the abandonment's effect, if any, on the environment or historic resources. The Section of Energy and Environment (SEE) will issue an environmental assessment (EA) by December 21, 1993. Interested persons may obtain a copy of the EA from SEE by writing to it (Room 3219, Interstate Commerce Commission, Washington, DC 20423) or by calling Elaine Kaiser, Chief of SEE, at (202) 927–6248. Comments on environmental and historic preservation matters must be filed within 15 days after the EA becomes available to the public.

Environmental, historic preservation, public use, or trail use/rail banking conditions will be imposed, where appropriate, in a subsequent decision.

Decided: December 9, 1993.

By the Commission, David M. Konschnik, Director, Office of Proceedings.

Sidney L. Strickland, Jr.,

Secretary.

[FR Doc. 93–30723 Filed 12–15–93; 8:45 am]

BILLING CODE 7035–01–P

[1] A stay will be routinely issued by the Commission in those proceedings where an informed decision on environmental issues (whether raised by a party or by the Commission's Section of Energy and Environment in its independent investigation) cannot be made prior to the effective date of the notice of exemption. See *Exemption of Out-of-Service Rail Lines*, 5 I.C.C.2d 377 (1989). Any entity seeking a stay involving environmental concerns is encouraged to file its request as soon as possible in order to permit the Commission to review and act on the request before the effective date of this exemption.

[2] See *Exempt. of Rail Abandonment—Offers of Finan. Assist.*, 4 I.C.C.2d 164 (1987).

[3] The Commission will accept a late-filed trail use request as long as it retains jurisdiction to do so.

DEPARTMENT OF JUSTICE

Drug Enforcement Administration

Manufacturer of Controlled Substances; Application

Pursuant to § 1301.43(a) of title 21 of the Code of Federal Regulations (CFR), this is notice that on October 25, 1993, Anys, Inc., 2 Goodyear, Irvine, California 92718, made application to the Drug Enforcement Administration (DEA) for registration as a bulk manufacturer of the basic classes of controlled substances listed below:

Drug	Schedule
Phencyclidine (7471)	II.
1-Piperidinocyclohexanecarbonitrile (8603)	II.

Anys, Inc., formerly Toxi-Lab, Inc., plans to manufacture small quantities of the above substances for research purposes and to manufacture drug detection kits which will be sold to crime laboratories and emergency rooms.

Any other such applicant and any person who is presently registered with DEA to manufacture such substances may file comments or objections to the issuance of the above application and may also file a written request for a hearing thereon in accordance with 21 CFR 1301.54 and in the form prescribed by 21 CFR 1316.47.

Any such comments, objections, or requests for a hearing may be addressed to the Director, Office of Diversion Control, Drug Enforcement Administration, United States Department of Justice, Washington, DC 20537, Attention: DEA Federal Register Representative (CCR), and must be filed no later than January 18, 1994.

Dated: December 3, 1993.

Gene R. Haislip,

Director, Office of Diversion Control, Drug Enforcement Administration.

[FR Doc. 93–30613 Filed 12–15–93; 8:45 am]

BILLING CODE 4410–09–M

[Docket No. 93–47]

Gary D. Benke, M.D.; Revocation of Registration

On January 22, 1993, the Deputy Assistant Administrator, Office of Diversion Control, Drug Enforcement Administration (DEA), issued an Order to Show Cause to Gary D. Benke, M.D., of 3265 Mayfield Road, #31, Cleveland Heights, Ohio 44118 proposing to revoke his DEA Certificate of Registration, AB1935797, and deny any pending applications for renewal of such registration. The statutory basis for the Order to Show Cause was that Respondent's continued registration would be inconsistent with the public interest, as that term is used in 21 U.S.C. 823(f) and 824(a)(4).

The Order to Show Cause was sent to Respondent at his registered location and was returned to DEA unclaimed. The Order to Show Cause was subsequently forwarded to Respondent's residence in Eden Prairie, Minnesota, and was received on March 22, 1993. By letter dated May 14, 1993, Respondent requested a hearing on the issues raised in the Order to Show Cause, and the matter was docketed before Administrative Law Judge Paul A. Tenney.

On June 4, 1993, the Government filed a motion for summary disposition. Along with the motion, Government counsel attached a copy of a letter dated December 21, 1992, from the Case Control Officer of the State Medical Board of Ohio, which indicated that effective December 31, 1990, Respondent's state medical license was inactive due to failure to renew. The administrative law judge allowed the Respondent until June 17, 1993, to respond to the Government's motion. On June 21, 1993, the Respondent moved for an extension of time in which to file a response to the Government's motion. The administrative law judge granted the motion, allowing Respondent until July 1, 1993, to respond.

The Respondent has not filed a response to the Government's motion. On July 19, 1993, the administrative law judge issued his opinion and recommended decision, granting in part, the Government's motion for summary disposition, and recommending the revocation of Respondent's DEA Certificate of Registration. No exceptions were filed and, on August 20, 1993, the administrative law judge transmitted the record of these proceedings to the Administrator. After careful consideration of the record in this matter, the Acting Administrator

adopts the administrative law judge's opinion and recommended decision.

The Acting Administrator finds that on December 31, 1990, the Respondent's Ohio medical license, Certificate Number 35055969, expired, and has not been restored. The Respondent subsequently relocated to the State of Minnesota, but has not submitted a request to have his DEA registration number, issued to him in Ohio, transferred to Minnesota. The Drug Enforcement Administration cannot register or maintain the registration of a practitioner who is not duly authorized to handle controlled substances in the state in which he conducts his business. 21 U.S.C. 802(21), 823(f) and 824(a)(3). This prerequisite has been consistently upheld. See James H. Nickens, M.D., 57 FR 59847 (1992); Elliott Monroe, M.D., 57 FR 23246 (1992); Bobby Watts, M.D., 53 FR 11919 (1988).

The Government argued in support of its motion that the Respondent was not authorized to handle controlled substances in either Ohio or Minnesota. The administrative law judge found that the Government's action for the proposed revocation or suspension is limited to Respondent's Ohio registered location, as noted in the Order to Show Cause. The administrative law judge noted further that his recommendation is intended not to reach any future DEA application for registration filed by the Respondent with respect to Minnesota, since such a recommendation would amount to a declaratory order. The administrative law judge granted, in part, the Government's motion for summary disposition, and recommended the revocation of Respondent's DEA Certificate of Registration. The Acting Administrator adopts the findings of fact, conclusions of law, and recommended ruling of the administrative law judge.

Accordingly, the Acting Administrator of the Drug Enforcement Administration, pursuant to the authority vested in him by 21 U.S.C. 823 and 824 and 28 CFR 0.100(b), hereby orders that DEA Certificate of Registration, AB1935797, previously issued to Gary D. Benke, M.D., be, and it hereby is, revoked and that any pending applications for renewal of such registration be, and they hereby are, denied.

This order is effective December 16, 1993.

Dated: December 8, 1993.

Stephen H. Greene,

Acting Administrator of Drug Enforcement.

[FR Doc. 93-30614 Filed 12-15-93; 8:45 am]

BILLING CODE 4410-09-M

NATIONAL ARCHIVES AND RECORDS ADMINISTRATION

Temporary Closing of Reference Service on Certain Textual Records

AGENCY: National Archives and Records Administration (NARA).

ACTION: Notice of closure and reopening of reference services for certain textual records holdings in the National Archives related to the move to the National Archives at College Park (Archives II) and the relocation of some records to the National Archives Building.

SUMMARY: This notice provides information about the period of time that reference service on certain textual records holdings of the National Archives will be unavailable due to the move of those holdings from their current locations in the National Archives Building in Washington, DC, and the Washington National Records Center in Suitland, Maryland, to new locations in either the new Archives II facility in College Park, Maryland, or the National Archives Building in Washington, DC. Additional notices will be published by NARA relating to the move of other holdings to Archives II.

During the periods shown for the record groups listed on the schedule at the end of this notice, the National Archives will be unable to provide records for research, or process requests for reproductions (fee orders) or requests for information from these records. Requests received during the periods of suspended service will be returned for resubmission after the date indicated for reopening the records for reference service. Changes in the overall move schedule may require changes in these dates.

For schedule updates and information on the new location of the records, call the User Services Division at (202) 501-5400.

Dated: December 9, 1993.

Linda N. Brown,

Acting Archivist of the United States.

RECORD GROUPS CLOSING

[December 1993—June 1994]

Cluster title	RG No.	Record group short title	Close date	Reopen date
Agriculture	7	Entomology and Plant Quarantine, Bureau of	12/17/93	01/19/94
Agriculture	8	Agricultural Engineering, Bureau of	01/03/94	01/21/94
Agriculture	16	Agriculture, Office of the Secretary of	01/04/94	02/16/94
Agriculture	17	Animal Industry, Bureau of	02/02/94	02/24/94
Agriculture	33	Extension Service	02/07/94	03/14/94
Agriculture	54	Plant Industry, Soils & Agricultural Engineering	02/25/94	03/28/94
Agriculture	83	Agricultural Economics, Bureau of	03/14/94	04/07/94
Agriculture	95	Forest Service	03/25/94	04/21/94
Agriculture	96	Farmers Home Administration	04/04/94	04/25/94
Agriculture	97	Agricultural & Industrial Chemistry, Bureau of	04/13/94	05/09/94
Agriculture	103	Farm Credit Administration	04/25/94	05/17/94
Agriculture	114	Soil Conservation Service	05/03/94	06/01/94
Agriculture	124	Surplus Marketing Administration	05/17/94	06/09/94
Agriculture	136	Agricultural Marketing Services	05/24/94	06/17/94
Agriculture	145	Agricultural Stabilization & Conservation Service	06/06/94	06/29/94
Agriculture	152	Dairy Industry, Bureau of	06/21/94	07/12/94
Agriculture	161	Commodity Credit Corporation	06/21/94	07/14/94
Commerce	40	Commerce, Department of	01/14/94	02/04/94
Commerce	81	International Trade Commission, U.S.	01/19/94	02/08/94
Commerce	91	Inland Waterways Corporation	01/24/94	02/10/94
Commerce	122	Federal Trade Commission	01/25/94	03/08/94
Commerce	134	Interstate Commerce Commission	02/21/94	04/29/94
Commerce	151	Foreign & Domestic Commerce, Bureau of	04/13/94	05/11/94

RECORD GROUPS CLOSING—Continued

[December 1993—June 1994]

Cluster title	RG No.	Record group short title	Close date	Reopen date
Commerce	169	Foreign Economic Administration	05/02/94	05/30/94
Commerce	173	Federal Communications Commission	05/13/94	06/17/94
Commerce	179	War Production Board	06/01/94	06/29/94
Commerce	188	Price Administration, Office of	06/13/94	07/22/94
Commerce	234	Reconstruction Finance Corporation	06/20/94	08/16/94
Commerce	259	War Communications, Board of	06/22/94	07/28/94
Energy	138	Federal Energy Regulatory Commission	04/04/94	04/21/94
Energy	245	Solid Fuels Administration for War	04/11/94	04/27/94
Energy	253	Petroleum Administration for War	04/11/94	05/05/94
Energy	326	Atomic Energy Commission	04/18/94	05/09/94
Energy	431	Nuclear Regulatory Commission	04/25/94	05/13/94
Energy	434	Energy, Department of	05/03/94	05/24/94
Housing and Urban Affairs	196	Public Housing Administration	05/09/94	05/30/94
Housing and Urban Affairs	31	Federal Housing Administration	05/09/94	05/26/94
Housing and Urban Affairs	207	Housing & Urban Development, Department of	05/13/94	06/07/94
Housing and Urban Affairs	252	Housing Expediter, Office of the	05/24/94	06/15/94
Housing and Urban Affairs	294	Federal National Mortgage Association	05/30/94	06/17/94
Interior/Environmental	22	Fish & Wildlife Service, U.S.	12/10/93	01/11/94
Interior/Environmental	48	Interior, Office of the Secretary of the	12/21/93	02/02/94
Interior/Environmental	55	Virgin Islands, Government of the	01/19/94	02/14/94
Interior/Environmental	57	U.S. Geological Survey	01/31/94	02/22/94
Interior/Environmental	70	Mines, U.S. Bureau of	02/08/94	03/14/94
Interior/Environmental	79	National Park Service	02/28/94	03/24/94
Interior/Environmental	115	Reclamation, Bureau of	03/14/94	04/07/94
Interior/Environmental	126	Territories, Office of	03/22/94	04/13/94
Interior/Environmental	139	Dominican Customs Receivership	03/28/94	04/15/94
Interior/Environmental	140	Military Government of Cuba	03/30/94	04/19/94
Interior/Environmental	141	Military Government of Veracruz	04/04/94	04/21/94
Interior/Environmental	185	Panama Canal	04/04/94	05/03/94
Interior/Environmental	186	Spanish Governors of Puerto Rico	04/18/94	05/05/94
Interior/Environmental	187	National Resources Planning Board	04/18/94	05/11/94
Interior/Environmental	193	Commissioner of Railroads	04/25/94	05/13/94
Interior/Environmental	199	Provisional Government of Cuba	04/25/94	05/13/94
Interior/Environmental	232	Petroleum Administrative Board	04/27/94	05/17/94
Interior/Environmental	312	Petroleum Administration for Defense	05/02/94	05/19/94
Interior/Environmental	320	Defense Minerals Exploration Administration	05/03/94	05/24/94
Interior/Environmental	315	Interagency Comms & Cncls Coordinating Water Use.	05/03/94	05/24/94
Interior/Environmental	327	Defense Electric Power Administration	05/09/94	05/30/94
Interior/Environmental	350	Insular Affairs, Bureau of	05/12/94	06/03/94
Interior/Environmental	368	Heritage Conservation and Recreation Service	05/13/94	06/07/94
Interior/Environmental	380	Saline Water, Office of	05/20/94	06/09/94
Interior/Environmental	515	Historic American Bldgs. Survey/Engineering Div.	05/24/94	06/27/94
Interior/Environmental	382	Federal Water Pollution Control Administration	05/24/94	06/13/94
Interior/Environmental	409	Public Land Law Review Commission	05/27/94	06/15/94
Interior/Environmental	412	Environmental Protection Agency	05/30/94	06/17/94
Interior/Environmental	452	American Revolution Bicentennial Administration	06/01/94	06/21/94
Science and Technology	23	Coast and Geodetic Survey	06/06/94	07/26/94
Science and Technology	27	Weather Bureau	06/30/94	08/03/94
Transportation	30	Public Roads, Bureau of	01/31/94	02/24/94
Transportation	197	Civil Aeronautics Board	02/14/94	03/08/94
Transportation	219	Defense Transportation, Office of	02/28/94	03/22/94
Transportation	198	Investigation & Research-Transportation, Board of	02/28/94	03/16/94
Transportation	398	Transportation, Department of	03/07/94	03/28/94
Transportation	237	Federal Aviation Administration	03/07/94	03/24/94
Transportation	406	Federal Highway Administration	03/14/94	04/05/94
Transportation	416	National Highway Traffic Safety Administration	03/28/94	04/13/94
Transportation	464	United States Railway Association	03/30/94	04/19/94
Transportation	197	Civil Aeronautics Board	02/14/94	03/08/94
Transportation	219	Defense Transportation, Office of	02/28/94	03/22/94
Transportation	198	Investigation & Research-Transportation, Board of	02/28/94	03/16/94
Transportation	398	Transportation, Department of	03/07/94	03/28/94
Transportation	237	Federal Aviation Administration	03/07/94	03/24/94
Transportation	406	Federal Highway Administration	03/14/94	04/05/94
Transportation	416	National Highway Traffic Safety Administration	03/28/94	04/13/94
Transportation	464	United States Railway Association	03/30/94	04/19/94

[FR Doc. 93-30709 Filed 12-15-93; 8:45 am]
BILLING CODE 7515-01-P

NATIONAL SCIENCE FOUNDATION

Special Emphasis Panel in Cross Disciplinary Activities; Meeting

In accordance with the Federal Advisory Committee Act (Pub. L. 920463, as amended), the National Science Foundation announces the following meeting.

Name: Special Emphasis Panel in Cross-Disciplinary Activities (1193).

Date and time: January 21, 1994; 8:30 a.m. to 5 p.m.

Place: National Science Foundation, 4201 Wilson Boulevard, Arlington, VA 22230, rooms 330, 365, and 370.

Contact persons: John C. Cherniavsky and Caroline Wardle, Head and Program Director, CISE/OCDA, room 1160, National Science Foundation, 4201 Wilson Boulevard, Arlington, VA 22230.

Type of meeting: Closed.

Telephone: (703) 306-1980.

Purpose of meeting: To provide advice and recommendations concerning proposals submitted to NSF for financial support.

Agenda: To review and evaluate CISE Research Infrastructure proposals as part of the selection process for awards.

Reason for closing: The proposals being reviewed include information of a proprietary or confidential nature, including technical information; financial data, such as salaries; and personal information concerning individuals associated with the proposals. These matters are exempt under 5 U.S.C. 552b(c), (4) and (6) of the Government in the Sunshine Act.

Dated: December 13, 1993.

M. Rebecca Winkler,

Committee Management Officer.

[FR Doc. 93-30660 Filed 12-15-93; 8:45 am]
BILLING CODE 7555-01-M

Special Emphasis Panel in Engineering Education and Centers; Meeting

In accordance with the Federal Advisory Committee Act (Pub. L. 92-463, as amended), the National Science Foundation announces the following meeting.

Name: Emphasis Panel in Engineering Education and Centers

Date and time: January 6-7, 1994: 8:30 a.m. to 5 p.m.

Place: 4201 Wilson Boulevard, Arlington, Virginia room 310, 310.2, 360, and 370.

Type of meeting: Closed.

Contact person: Dr. Christina Gabriel, National Science Foundation, 4201 Wilson Boulevard, Arlington, Virginia 22230. Telephone: (703) 306-1381.

Purpose of meeting: To provide advice and recommendations concerning proposals submitted to NSF for financial support.

Agenda: To review and evaluate Engineering Research Centers proposals as part of the selection process for awards.

Reason for closing: The proposals being reviewed include information of a proprietary or confidential nature, including technical information; financial data, such as salaries; and personal information concerning individuals associated with the proposals. These matters are exempt under 5 U.S.C. 552b(c), (4) and (6) of the Government in the Sunshine Act.

Dated: December 13, 1993.

M. Rebecca Winkler,

Committee Management Officer.

[FR Doc. 93-30657 Filed 12-15-93; 8:45 am]
BILLING CODE 7555-01-M

Special Emphasis Panel in Research, Evaluation, and Dissemination; Meeting

In accordance with the Federal Advisory Committee Act (Pub. L. 92-463, as amended), the National Science Foundation announces the following meeting.

Name and committee code: Special Emphasis Panel in Research, Evaluation, and Dissemination (1210).

Date and time: January 10-12, 1994; 8:30 a.m. to 5 p.m.

Place: Rooms 390 and 395, National Science Foundation, 4201 Wilson Boulevard, Arlington, VA.

Type of meeting: Closed.

Contact person: Dr. Nora Sabelli, Division of Research, Evaluation, and Dissemination, room 855, National Science Foundation, 4201 Wilson Boulevard, Arlington, VA 22230. Telephone: (703) 306-1650.

Purpose of meeting: To provide advice and recommendations concerning proposals submitted to NSF for financial support.

Agenda: To review and evaluate Applications of Advanced Technologies proposals as part of the selection process for awards.

Reason for closing: The proposals being reviewed include information of a proprietary or confidential nature, including technical information; financial data, such as salaries; and personal information concerning individuals associated with the proposals. These matters are exempt under 5 U.S.C. 552b(c), (4) and (6) of the Government in the Sunshine Act.

Dated: December 13, 1993.

M. Rebecca Winkler,

Committee Management Officer.

[FR Doc. 93-30658 Filed 12-15-93; 8:45 am]
BILLING CODE 7555-01-M

Special Emphasis Panel in Systemic Reform; Meeting

In accordance with the Federal Advisory Committee Act (Pub. L. 92-463, as amended), the National Science Foundation announces the following meeting.

Name and Code: Special Emphasis Panel in Systemic Reform (1198).

Date and time: January 9, 1994 (6-9 p.m.); January 10-12 (8 a.m.-9 p.m.)

Place: NSF, 3rd Floor, 4201 Wilson Boulevard, Arlington, VA.

Type of meeting: Closed.

Contact person: Janice Earle, Peirce Hammond, or Julia Wan, Program Directors, Statewide Systemic Initiatives, room 875, National Science Foundation, 4201 Wilson Boulevard, Arlington, VA 22230. Telephone: (703) 306-1682.

Purpose of meeting: To provide advice and recommendations concerning proposals submitted to NSF for financial support.

Agenda: A reverse site visit to review awards for future proposal funding for the Statewide Systemic Initiatives Program as part of the selection process for continuing awards.

Reason for closing: The awards being reviewed include information of a proprietary or confidential nature, including technical information; financial data, such as salaries; and personal information concerning individuals associated with the awards. These matters are exempt under 5 U.S.C. 552b(c), (4) and (6) of the Government in the Sunshine Act.

Dated: December 13, 1993.

M. Rebecca Winkler,

Committee Management Officer.

[FR Doc. 93-30659 Filed 12-15-93; 8:45 am]
BILLING CODE 7555-01-M

NUCLEAR REGULATORY COMMISSION

[Docket No. 50-440]

The Cleveland Electric Illuminating Co., et al.; Perry Nuclear Power Plant, Unit No. 1; Environmental Assessment and Finding of No Significant Impact

The U.S. Nuclear Regulatory Commission (the Commission) is considering issuance of an amendment to Facility Operating License No. NPF-58 issued to the Cleveland Electric Illuminating Company, et al., (the licensee), for operation of the Perry Nuclear Power Plant, Unit No. 1, located in Lake County, Ohio.

Environmental Assessment

Identification of Proposed Action

The proposed action would revise the provisions in the Technical Specifications (TS) relating to the isolation actuation instrumentation for the reactor core isolation cooling (RCIC) system. The revision would delete the RCIC isolation on high RCIC room differential temperature to improve the reliability of RCIC.

The proposed action is in accordance with the licensee's application for amendment dated January 19, 1990.

The Need for the Proposed Action

The proposed change to the TS is required in order to allow the licensee to delete the RCIC isolation on high RCIC room differential temperature to prevent inadvertent and unnecessary isolation of RCIC on a spurious RCIC room high differential temperature signal.

Environmental Impact of the Proposed Action

The Commission has completed its evaluation of the proposed revision to the TS and concludes that if the RCIC isolation on high RCIC room differential temperature is removed there would still be redundant, diverse, reliable means of isolating a leak from RCIC in the equipment room. Therefore, the proposed changes do not increase the probability or consequences of accidents, no changes are being made in the types of any effluents that may be released offsite, and there is no significant increase in the allowable individual or cumulative occupational radiation exposure. Accordingly, the Commission concludes that this proposed action would result in no significant radiological environmental impact.

With regard to potential nonradiological impacts, the proposed change to the TS involves systems located within the restricted area as defined by 10 CFR part 20. The proposed change will not result in a measurable change to the nonradiological plant effluents and therefore, will not have any environmental impact. Therefore, the Commission concludes that there are no significant nonradiological environmental impacts associated with the proposed amendment.

The Notice of Consideration of Issuance of Amendment and Opportunity for Hearing in connection with this action was published in the **Federal Register** on February 28, 1990 (55 FR 7073). No request for hearing or petition for leave to intervene was filed following this notice.

Alternative to the Proposed Action

Since the Commission concluded that there are no significant environmental effects that would result from the proposed action, any alternatives with equal or greater environmental impacts need not be evaluated. The principal alternative would be to deny the requested amendment. This would not reduce environmental impacts of plant operation and would result in reduced operational flexibility.

Alternative Use of Resources

This action does not involve the use of resources not previously considered in the Final Environmental Statement related to operation of the Perry Nuclear Power Plant, Units 1 and 2, dated August 1982.

Agencies and Persons Consulted

The NRC staff reviewed the licensee's request and did not consult other agencies or persons.

Finding of No Significant Impact

The Commission has determined not to prepare an environmental impact statement for the proposed license amendment.

Based upon the foregoing environmental assessment, the Commission concludes that the proposed action will not have a significant effect on the quality of the human environment.

For further details with respect to this action, see the licensee's application for amendment dated January 19, 1990, which is available for public inspection at the Commission's Public Document Room, Gelman Building, 2120 L Street, NW., Washington, DC 20555 and at the local public document room at the Perry Public Library, 3753 Main Street, Perry, Ohio 44081.

Dated at Rockville, Maryland, this 10th day of December 1993.

For the Nuclear Regulatory Commission.

John N. Hannon,

Director, Project Directorate III-3, Division of Reactor Project—III/IV/V, Office of Nuclear Reactor Regulation.

[FR Doc. 93-30667 Filed 12-15-93; 8:45 am]

BILLING CODE 7590-01-M

Proposed Supplement 1 to Generic Letter 89-04, "Guidance on Developing Acceptable Inservice Testing Programs"

AGENCY: Nuclear Regulatory Commission.

ACTION: Notice of opportunity for public comment.

SUMMARY: The Nuclear Regulatory Commission (NRC) is proposing to issue a supplement to a generic letter. A generic letter is an NRC document that (1) requests licensees to submit analyses or descriptions of proposed corrective actions, or both, regarding matters of safety, safeguards, or environmental significance, or (2) requests licensees to submit information to the NRC on other technical or administrative matters, or (3) transmits information to licensees regarding approved changes to rules or regulations, the issuance of reports or evaluations of interest to the industry, or changes to NRC administrative procedures. When issued, this generic letter supplement will forward NUREG-1482, "Guidelines for Inservice Testing Programs at Nuclear Power Plants," which provides NRC recommendations for a number of generic issues concerning the implementation and development of inservice testing programs. The NRC is seeking comment from interested parties regarding both the technical and regulatory aspects of both the proposed generic letter supplement and the current draft of NUREG-1482. The staff is particularly interested in comments regarding any methods in the NUREG that a licensee may view as a backfit, along with recommendations for alternative methods. Additionally, the staff is interested in comments concerning the appropriate format of the document for final issuance (e.g., NUREG, attachment to the generic letter, or other). The proposed generic letter supplement is presented under the Supplementary Information heading. Because of its length, the current draft of NUREG-1482 is not presented in this request for comments. However, a free single copy of draft NUREG-1482 may be requested by those considering a public comment by writing to the Distribution and Mail Services Section, Mail Stop P-370, U.S. Nuclear Regulatory Commission, Washington, DC 20555. Copies of NUREG-1482 also may be obtained from the NRC Public Document Room, 2120 L Street, NW. (Lower Level), Washington, DC 20037. This proposed generic letter supplement and supporting documentation were discussed in meeting number 249 of the Committee to Review Generic Requirements (CRGR). The relevant information reflecting CRGR review of the proposed generic letter supplement is available in the Public Document Rooms under accession number 9311190453. The NRC will consider comments received from interested parties in the final evaluation of the proposed generic letter supplement and NUREG-1482. The NRC's final evaluation will include a review of the technical position and, when appropriate, an analysis of the value/impact on licensees. Should this generic letter supplement be issued by the NRC, it will become available for public inspection in the Public Document Rooms.

PUBLIC MEETING: A public meeting to discuss the proposed generic letter supplement and draft NUREG-1482 will be held on February 2, 1994, from 8:30 a.m. to 4 p.m. and on February 3, 1994,

from 8:30 a.m. to 1 p.m. at the Holiday Inn (Versailles I Room), 8120 Wisconsin Avenue, Bethesda, Maryland 20814. The phone number for the hotel is (301) 652–2000.

DATES: The comment period expires March 10, 1994. However, commentors are encouraged to submit their comments, along with any proposed questions, prior to January 14, 1994, to permit the staff time to adequately prepare for a discussion of the comments at the public meeting. Comments submitted after March 10, 1994, will be considered if it is practical to do so, but assurance of consideration cannot be given except for comments received on or before this date.

ADDRESSES: Submit written comments to Chief, Rules and Directives Review Branch, U.S. Nuclear Regulatory Commission, Washington, DC 20555. Written comments may also be delivered to room P–223, Phillips Building, 7920 Norfolk Avenue, Bethesda, Maryland, from 7:30 a.m. to 4:15 p.m., Federal workdays. Copies of written comments received may be examined at the NRC Public Document Room, 2120 L Street, NW. (Lower Level), Washington, DC.

FOR FURTHER INFORMATION CONTACT: Patricia L. Campbell (301) 504–1311.

SUPPLEMENTARY INFORMATION:

TO: All licensees of operating nuclear power plants and holders of construction permits for nuclear power plants.

SUBJECT: Guidance on developing acceptable inservice testing programs (Geniric Letter 89–04, supplement 1).

Purpose

The U.S. Nuclear Regulatory Commission (NRC) is issuing this generic letter to notify you about the issuance of NUREG–1482, "Guidelines for Inservice Testing Programs at Nuclear Power Plants," and to make available the recommendations contained in NUREG–1482 for use by addresses who wish to use them. NUREG–1482 provides NRC recommendations for a number of generic issues concerning the implementation and development of inservice testing (IST) programs and includes the positions from Generic Letter 89–04 supplemented with the current considerations for using these positions.

Description of Circumstances

The staff is issuing NUREG–1482 to address the number of similar relief requests from various plants and to supplement the guidance of Generic Letter (GL) 89–04, "Guidance on Developing Acceptable Inservice Testing Programs," to current American Society of Mechanical Engineers (ASME) Boiler and Pressure Vessel Code and regulatory issues.

Discussion

NUREG–1482 describes a historical and current perspective of the regulatory requirements for inservice testing of pumps and valves in nuclear power plants. It includes information on the format and content for inservice testing programs and relief requests, examples of relief requests, clarification of issues described in information notices or other NRC letters related to inservice testing, and the current considerations for positions included in GL 89–04.

Licensees may use the NUREG–1482 to develop relief requests, to implement portions of later editions of the ASME Code and Addenda incorporated in 10 CFR 50.55a(b), and to review alternatives acceptable to the staff. NUREG–1482 may be obtained from the Superintendent of Documents, U.S. Government Printing Office, P.O. Box 37802, Washington, DC 20013–7082.

Requested Actions

The generic letter does not request actions. The use of the guidance in NUREG–1482 is strictly voluntary.

Reporting Requirements

The generic letter does not require any reporting by addresses. However, if the guidance in NUREG–1482 is used voluntarily to make changes to licensee IST programs, revised relief requests or program documents may need to be submitted to the NRC.

Backfit Discussion

The staff has not performed a backfit analysis because the information herein pertains to actions that are strictly voluntary.

Dated at Rockville, Maryland, this 24th day of November 1993.

For the Nuclear Regulatory Commission.

Gail H. Marcus,

Chief, Generic Communications Branch, Division of Operating Reactor Support, Office of Nuclear Reactor Regulation.

[FR Doc. 93–30665 Filed 12–15–93; 8:45 am]

BILLING CODE 7590–01–M

[Docket No. 50–305]

Wisconsin Public Service Corp., Wisconsin Power and Light Co., Madison Gas and Electric Co.; Withdrawal of Application for Amendment to Facility Operating License

The U.S. Nuclear Regulatory Commission (the Commission) has granted the request of Wisconsin Public Service Corporation, Wisconsin Power and Light Company, and Madison Gas and Electric Company, (the licensees) to withdraw their application dated December 27, 1991, for a proposed amendment to Facility Operating License No. DPR–43 for the Kewaunee Nuclear Power Plant, located in Kewaunee County, Wisconsin.

The proposed amendment would have revised the facility technical specifications to approve the use of an alternate repair criteria for the steam generator tubes experiencing outside diameter stress corrosion cracking at the support plates intersections.

The Commission had previously issued a Notice of Consideration of Issuance of Amendment published in the **Federal Register** on March 4, 1992 (57 FR 7818). However, by letter dated November 8, 1993, the licensee withdrew the proposed change.

For further details with respect to this action, see the application for amendment dated December 27, 1991, and the licensee's letter dated November 8, 1993, which withdrew the application for license amendment. The above documents are available for public inspection at the Commission's Public Document Room, 2120 L Street, NW., Washington, DC 20555, and at the local public document room located at the University of Wisconsin Library Learning Center, 2420 Nicolet Drive, Green Bay, Wisconsin 53401.

Dated at Rockville, Maryland, this 10th day of December 1993.

For the Nuclear Regulatory Commission.

John N. Hannon,

Director, Project Directorate III–3, Division of Reactor Projects—III/IV/V, Office of Nuclear Reactor Regulation.

[FR Doc. 93–30668 Filed 12–15–93; 8:45 am]

BILLING CODE 7590–01–M

SECURITIES AND EXCHANGE COMMISSION

[Release No. 34-33312; File No. SR-Amex-93-36]

Self-Regulatory Organizations; Filing of Proposed Rule Change by the American Stock Exchange, Inc. Relating to Options on the Natural Gas Index

December 9, 1993.

Pursuant to section 19(b)(1) of the Securities Exchange Act of 1934 ("Act"), 15 U.S.C. 78s(b)(1), notice is hereby given that on November 12, 1993, the American Stock Exchange, Inc. ("Amex" or "Exchange") filed with the Securities and Exchange Commission ("Commission") the proposed rule change as described in Items I, II, and III below, which Items have been prepared by the Amex. The Commission is publishing this notice to solicit comments on the proposed rule change from interested persons.

I. Self-Regulatory Organization's Statement of the Terms of Substance of the Proposed Rule Change

The Exchange proposes to list options on the Natural Gas Index ("Index"), a new stock index developed by the Amex based on natural gas industry stocks (or ADRs thereon) which are traded on the Amex, the New York Stock Exchange, Inc. ("NYSE"), or other U.S. securities exchanges, or through the facilities of the National Association of Securities Dealers Automated Quotation system and are reported national market system securities ("NASDAQ/NMS"). In addition, the Amex proposes to amend Rule 901C, Commentary .01 to reflect that 90% of the Index's numerical index value will be accounted for by stocks that meet the current criteria and guidelines set forth in Rule 915. The text of the proposed rule change is available at the Office of the Secretary, the Amex, and at the Commission.

II. Self-Regulatory Organization's Statement of the Purpose of, and Statutory Basis for, the Proposed Rule Change

In its filing with the Commission, the Amex included statements concerning the purpose of and basis for the proposed rule change and discussed any comments it received on the proposed rule change. The text of these statements may be examined at the places specified in Item IV below. The Amex has prepared summaries, set forth in sections (A), (B), and (C) below, of the most significant aspects of such statements.

(A) Self-Regulatory Organization's Statement of the Purpose of, and the Statutory Basis for, the Proposed Rule Change

The Amex has developed a new industry-specific index called the Natural Gas Index, based entirely on shares of widely-held natural gas industry stocks which are exchange or NASDAQ/NMS listed.[1] It is intended that the Amex list option contracts on the newly developed Index.

The Index contains securities of highly-capitalized companies in the natural gas industry. Included in this group are companies in the U.S. which are involved in natural gas exploration and production, natural gas transmission, or natural gas distribution.

Index Calculation

The Index is calculated using an "equal-dollar weighting" methodology designed to ensure that each of the component securities is represented in an approximately "equal" dollar amount in the Index. The Exchange believes that this method of calculation is important since even among the largest companies in the natural gas industry there is great disparity in market value. For example, although the stocks included in the Index represent many of the most highly capitalized companies in the natural gas industry, the three largest companies in terms of market capitalization (*i.e.*, Enron Corp. (22.16%), Burlington Resources (16.18%), and Consolidated Natural Gas (12.35%)) represent over 50% of the aggregate market value of the Index. It has been the Exchange's experience that options on market value weighted indexes dominated by a few component stocks are less useful to investors, since the index will tend to represent those few components and not the broader target sector that the index is designed to represent.

The following is a description of how the equal-dollar weighting calculation method works, As of the market close on October 15, 1993, a portfolio of natural gas stocks was established representing an investment of $10,000 in the stock (rounded to the nearest whole share) of each of the companies in the Index. The value of the Index equals the current market value (*i.e.*, based on U.S. primary market prices) of the sum of the assigned number of shares of each of the stocks in the Index portfolio divided by the Index divisor. The Index divisor was initially determined to yield the benchmark value of 300.00 at the close of trading on October 15, 1993. Each quarter thereafter, following the close of trading on the third Friday of January, April, July, and October, the Index portfolio will be adjusted by changing the number of whole shares of each component stock so that each company is again represented in "equal" dollar amounts. The Exchange has chosen to rebalance following the close of trading on the quarterly expiration cycle because it allows an option contract to be held for up to three months without a change in the Index portfolio while at the same time, maintaining the equal dollar weighting feature of the Index. If necessary, a divisor adjustment is made at the rebalancing to ensure continuity of the Index's value. The newly adjusted portfolio becomes the basis for the Index's value on the first trading day following the quarterly adjustment.

The Exchange represents that it has had experience making regular quarterly adjustments to certain of its indexes (*e.g.*, the Amex Institutional Index) and has not encountered investor confusion regarding the adjustments, since they are done on a regular basis and timely, proper, and adequate notice is given in the form of an information circular distributed to all Exchange members notifying them of the quarterly changes. This circular is also sent to the Exchange's contacts at the major options firms, mailed to recipients of the Exchange's options related information circulars, and made available to subscribers of the Options News Network. In addition, the Exchange will include in its promotional and marketing materials for the Index a description of the equal-dollar weighting methodology. The Exchange states that this procedure has been used for the Exchange's Biotechnology Index, another equal-dollar weighted index.[2]

As noted above, the number of shares of each component stock in the Index portfolio remains fixed between quarterly reviews except in the event of certain types of corporate actions such as the payment of a dividend other than an ordinary cash dividend, a stock distribution, stock split, reverse stock split, rights offering, distribution, reorganization, recapitalization, or similar event with respect to the component stocks. In a merger or consolidation of an issuer of a

[1] The component securities of the Index are Apache Corp.; Anadarko Petroleum Corp.; Burlington Resources; Consolidated Natural Gas; Cabot Oil and Gas Corporation (Class A); Enron Corp.; Ensearch Corp.; Louisiana Land and Exploration; Mitchell Energy and Development; Noble Affiliates Inc.; Oryx Energy; Parker and Parsley Petroleum; Pogo Producing Co.; Seagull Energy Corp.; and Sonat Inc.

[2] See Securities Exchange Act Release No. 31245 (September 28, 1992), 57 FR 45844.

component stock, if the stock remains in the Index, the number of shares of that security in the portfolio may be adjusted, to the nearest whole share, to maintain the component's relative weight in the Index at the level immediately prior to the corporate action. In the event of a stock replacement, the average dollar value of the remaining portfolio components will be calculated and that amount invested in the stock of the new component, to the nearest whole share. In all cases, the divisor will be adjusted, if necessary, to ensure Index continuity.

The Amex will calculate and maintain the Index, and pursuant to Exchange Rule 901C(b) may at any time or from time to time substitute stocks, or adjust the number of stocks included in the Index based on changing conditions in the natural gas industry. However, in the event the Exchange determines to increase the number of Index component stocks to greater than twenty or to reduce the number of component stocks to fewer than ten, the Exchange will give prior written notice to the Commission.[3] In selecting securities to be included in the Index, the Exchange will be guided by a number of factors including market value of outstanding shares and trading activity. The eligibility standards for Index components are described below.

Similar to other stock index values published by the Exchange, the value of the Index will be calculated continuously and disseminated every 15 seconds over the Consolidated Tape Association's Network B.

Expiration and Settlement

The proposed options on the Index are European-style,[4] and cash-settled. The Exchange's standard option trading hours (9:30 a.m. to 4:10 p.m. Eastern Standard Time) will apply to Index options. The options on the Index will expire on the Saturday following the third Friday of the expiration month ("Expiration Friday"). The last trading day in an Index option series will normally be the second to last business day preceding the Saturday following Expiration Friday (normally a Thursday). Trading in expiring Index options will cease at the close of trading on the last trading day.

The Exchange plans to list Index options series with expirations in the three near-term calendar months and in the two additional calendar months in the January cycle. In addition, longer term option series having up to thirty-six months to expiration may be traded. In lieu of such long-term options based on the full-value of the Index, the Exchange may instead list long-term, reduced-value put and call options based on one-tenth (1/10th) of the Index's full value. In either event, the interval between expiration months for either a full-value or reduced-value long-term Index option will not be less than six months. The trading of any long-term Index options would be subject to the same rules which govern the trading of all the Exchange's Index options, including sales practice rules, margin requirements, and floor trading procedures. Position limits on reduced-value long-term Index options will be equivalent to the position limits for regular (full-value) Index options and would be aggregated with such options. For example, if the position limit for the full-value options on the Index is 10,500 contracts on the same side of the market, then the position limit for the reduced-value options will be 105,000 contracts on the same side of the market.

The exercise settlement value for all of the expiring Index options will be calculated based upon the primary exchange regular way opening sale prices for the component stocks. In the case of securities traded through the NASDAQ system, the first reported sale price will be used. If any component stock does not open for trading on its primary market on the last day before expiration, then the prior day's last sale price will be used in the exercise settlement value calculation.

Eligibility Standards for Index Components

Exchange Rule 901C specifies criteria for inclusion of stocks in an index on which options will be traded on the Exchange. In choosing among natural gas industry stocks that meet the minimum criteria set forth in Rule 901C, the Exchange will focus only on stocks that are traded on the NYSE, Amex (subject to the limitations of Rule 901C), other U.S. securities exchanges, or NASDAQ/NMS. In addition, the Exchange intends to select stocks that (1) have a minimum market value (in U.S. dollars) of at least $75 million, and (2) have an average monthly trading volume in the U.S. markets over the previous six month period of not less than one million shares except that component stocks accounting for not more than 10% of the Index value at rebalancing may have an average monthly trading volume of not less than 500,000 shares.

The Index currently has fifteen component stocks, all of which are eligible for standardized option trading and thirteen of the fifteen are currently the subject of standardized option trading. However, to address concerns about the possibility of manipulation of an index containing a large percentage of stocks that do not meet the eligibility standards applicable to stocks eligible for standardized option trading, at each quarterly rebalancing, stocks that meet the then current criteria for standardized option trading set forth in Exchange Rule 915 will be required to account for at least 90% of the Index's numerical value, and this requirement will be reflected in commentary to Exchange Rule 901C.

Exchange Rules Applicable to Stock Index Options

Amex Rules 900C through 980C will apply to the trading of option contracts based on the Index. These Rules cover issues such as surveillance, exercise prices, and position limits. Surveillance procedures currently used to monitor trading in each of the Exchange's other index options will also be used to monitor trading in options on the Index. The Index is deemed to be a Stock Index Option under Rule 901C(a) and a Stock Index Industry Group under Rule 900C(b)(1). With respect to Rule 903C(b), the Exchange proposes to list near-the-money (*i.e.*, strike prices within ten points above or below the current index value) option series on the Index at 2½ intervals only when the value of the Index is below 200 points.

The Exchange believes that the proposed rule change is consistent with section 6(b) of the Act, in general, and furthers the objectives of section 6(b)(5) in particular, in that it is designed to prevent fraudulent and manipulative acts and practices, to promote just and equitable principles of trade, and to remove impediments to and perfect the mechanism of a free and open market and a national market system.

(B) Self-Regulatory Organization's Statement on Burden on Competition

The Amex does not believe that the proposed rule change will impose any inappropriate burden on competition.

(C) Self-Regulatory Organization's Statement on Comments on the Proposed Rule Change Received From Members, Participants or Others

No written comments were solicited or received with respect to the proposed rule change.

[3] Such a change in the number of components in the Index may warrant the submission of a rule filing pursuant to Section 19 of the Act and Rule 19b–4 thereunder.

[4] European-style options may only be exercised during a specified time period immediately prior to expiration.

III. Date of Effectiveness of the Proposed Rule Change and Timing for Commission Action

Within 35 days of the date of publication of this notice in the Federal Register or within such longer period (i) as the Commission may designate up to 90 days of such date if it finds such longer period to be appropriate and publishes its reasons for so finding or (ii) as to which the self-regulatory organization consents, the Commission will:

(A) By order approve such proposed rule change, or

(B) Institute proceedings to determine whether the proposed rule change should be disapproved.

IV. Solicitation of Comments

Interested persons are invited to submit written data, views and arguments concerning the foregoing. Persons making written submissions should file six copies thereof with the Secretary, Securities and Exchange Commission, 450 Fifth Street, NW., Washington, DC 20549. Copies of the submission, all subsequent amendments, all written statements with respect to the proposed rule change that are filed with the Commission, and all written communications relating to the proposed rule change between the Commission and any person, other than those that may be withheld from the public in accordance with the provisions of 5 U.S.C. 552, will be available for inspection and copying in the Commission's Public Reference Section, 450 Fifth Street, NW., Washington, DC. Copies of such filing will also be available for inspection and copying at the principal office of the Amex. All submissions should refer to File No. SR-Amex-93-36 and should be submitted by January 6, 1994.

For the Commission, by the Division of Market Regulation, pursuant to delegated authority.[5]

Margaret H. McFarland,

Deputy Secretary.

[FR Doc. 93-30693 Filed 12-15-93; 8:45 am]

BILLING CODE 8010-01-M

[5] 17 CFR 200.30-3(a)(12) (1992).

[Release No. 34-33316; File No. SR-Amex-93-34]

Self-Regulatory Organizations; Filing and Order Granting Accelerated Approval of Proposed Rule Change by the American Stock Exchange, Inc. Relating to Minimum Halt Period for Equipment Changeover Trading Halts

December 9, 1993.

Pursuant to section 19(b)(1) of the Securities Exchange Act of 1934 ("Act"),[1] and Rule 19b-4 thereunder,[2] notice is hereby given that on November 9, 1993, the American Stock Exchange, Inc. ("Amex" or "Exchange") filed with the Securities and Exchange Commission ("Commission") the proposed rule change as described in Items I and II below, which Items have been prepared by the self-regulatory organization. The Commission is publishing this notice to solicit comments on the proposed rule change from interested persons.

I. Self-Regulatory Organization's Statement of the Terms of Substance of the Proposed Rule Change

The Exchange is proposing to revise its trading halt policy to reduce the minimum duration of a halt involving an "equipment changeover" from fifteen to five minutes. The revised policy would also provide that if, during an equipment changeover trading halt in a stock, a significant order imbalance develops or a regulatory condition occurs (i.e., news pending or news dissemination), then the nature of the halt condition would be changed accordingly and notice of such change would be disseminated. The minimum halt period prior to the resumption of trading would then be fifteen minutes following the first indication after the new halt condition is disseminated.

The text of the proposed rule change is available at the Office of the Secretary, Amex and at the Commission.

II. Self-Regulatory Organization's Statement of the Purpose of, and Statutory Basis for, the Proposed Rule Change

In its filing with the Commission, the self-regulatory organization included statements concerning the purpose of and basis for the proposed rule change and discussed any comments it received on the proposed rule change. The text of these statements may be examined at the places specified in Item III below. The self-regulatory organization has prepared summaries, set forth in sections A, B, and C below, of the most significant aspects of such statements.

A. Self-Regulatory Organization's Statement of the Purpose of, and Statutory Basis for, the Proposed Rule Change

1. Purpose

The Exchange is proposing to revise its policy regarding trading halts to reduce the minimum period for the duration of a trading halt involving an equipment changeover condition. The purpose of an equipment changeover trading halt is to enable trading in a particular stock to be halted when trading is temporarily inhibited due to a systems, equipment or communications facility problem or for other technical reasons.

Equipment changeover halts are different from other established halt conditions (i.e., news pending, news dissemination and order imbalance) in that the purpose of such other halts is to give the investing public and market professionals a reasonable chance to reflect on, evaluate and react to news of a corporate event or a significant imbalance of supply and demand in a stock.

Current Exchange policy does not take into consideration the difference in rationale between an equipment changeover and other halt conditions in that regardless of the nature of the halt condition, a price indication must be disseminated before trading can be resumed, and trading may not be resumed for at least fifteen minutes from the time of the first indication. However, in many cases, a systems, equipment or other technical problem may be corrected in a much shorter period of time, and it may be possible to resume trading at a price which is a reasonable variation from the last sale in the stock prior to the halt.

Therefore, the Exchange is proposing to amend its policy to reduce the minimum halt period from fifteen to five minutes for these types of halts. Of course, if the systems, equipment or technical problem took longer to resolve, then the halt would continue until corrective action is completed.

In all other respects, existing policies relating to non-regulatory halts would apply to equipment changeover halts, including the fact that:

—An equipment changeover halt requires the approval of either (1) a Floor Governor, (2) an Exchange Official or (3) a Floor Official with the prior concurrence of a Floor Governor or Exchange Official;

—When more than one indication is necessary, trading may resume either

[1] 15 U.S.C. 78s(b)(1) (1988).

[2] 17 CFR 240.19b-4 (1991).

(1) five minutes after the last indication when it overlaps the prior indication or (2) ten minutes after the last indication when it does not overlap the prior indication;

—If the halt remains in effect at the close of the trading day, the Floor Governor/Exchange Official/Floor Official in consultation with the Floor Governor or Exchange Official may authorize the dissemination of an indication prior to the opening of business on the Exchange the next day. The Exchange Official or Floor Governor involved may dispense with the waiting period if no unusual situation exists prior to the opening of the affected stock.

Of course, as with all non-regulatory halts, an indication should be published immediately after the halt is declared.

The proposed rule change recognizes the possibility that during an equipment changeover halt, a significant order imbalance may develop or a "news pending" or "news dissemination" regulatory condition may occur. In such a case, the nature of the halt condition would be changed accordingly, and notice of such change would be disseminated. Thereafter, the standard policies relating to order imbalance or regulatory halts would apply. The minimum halt period prior to the resumption of trading in this case would be fifteen minutes following the first indication after the notice of the new halt condition is disseminated. A "significant order imbalance" is defined as one which results in a price change equal to the parameters set forth in Rule 154, Commentary .09 (i.e., two points or more in a stock selling at $20 or more, one point or more in a stock selling at $10 or more but less than $20, and one-half point or more in a stock selling at less than $10).

By shortening the minimum time period for an equipment changeover trading halt, the proposed change in policy will permit a security to reopen for trading in a more expeditious fashion, while providing for a fair and orderly market upon such resumption of trading.

2. Statutory Basis

The proposed rule change is consistent with section 6(b) of the Act in general and furthers the objectives of section 6 (b)(5) in particular in that it is designed to remove impediments to and perfect the mechanism of a free and open market and protect investors and the public interest.

B. Self-Regulatory Organization's Statement on Burden on Competition

The proposed rule will impose no burden on competition.

C. Self-Regulatory Organization's Statement on Comments on the Proposed Rule Change Received from Members, Participants or Others

No written comments were solicited or received with respect to the proposed rule change.

III. Solicitation of Comments

Interested persons are invited to submit written data, views and arguments concerning the foregoing. Persons making written submissions should file six copies thereof with the Secretary, Securities and Exchange Commission, 450 Fifth Street, NW., Washington, DC 20549. Copies of the submission, all subsequent amendments, all written statements with respect to the proposed rule change that are filed with the Commission, and all written communications relating to the proposed rule change between the Commission and any person, other than those that may be withheld from the public in accordance with the provisions of 5 U.S.C. 552, will be available for inspection and copying at the Commission's Public Reference Section, 450 Fifth Street, NW., Washington, DC 20549. Copies of such filing will also be available for inspection and copying at the principal office of the Amex. All submissions should refer to File No. SR–Amex–93–34 and should be submitted by January 6, 1994.

IV. Commission's Findings and Order Granting Accelerated Approval of Proposed Rule Change

The Commission finds that the Amex's proposal to decrease the minimum halt period for equipment changeover trading halts is consistent with the requirements of the Act and the rules and regulations thereunder applicable to a national securities exchange. Specifically, the Commission finds that the proposed rule change is consistent with section 6(b)(5) of the Act.[3] Section 6(b)(5) requires, among other things, that the rules of a national securities exchange be designed to remove impediments to and perfect the mechanism of a free and open market.

The present proposal will shorten the time period for an equipment changeover trading halt and consequently trading will reopen in a more expeditious manner. The Commission recognizes that equipment changeover halts are different from halts due to factors such as large order imbalances, news dissemination and other market driven forces. The former are technical and often stem from problems which can be resolved quickly. In these cases, the halt would continue for five minutes, or such longer period as is necessary to rectify the systems, equipment or technical problem.

Moreover, the rationale behind requiring trading to halt due to an equipment changeover is purely functional in that it only arises when a technical problem impedes trading. Thus, there is no need to continue the trading halt once trading can logistically resume. In general, market driven trading halts are intended to allow time to attract contra side interest and to provide an opportunity for all participants to evaluate adequately news and react accordingly.

Finally, the present proposal addresses the possibility that during an equipment changeover halt, market forces may result in a circumstance which would otherwise independently necessitate a trading halt. The proposal ensures that in such instances the nature of the halt condition would be changed, notice of such change would be disseminated, and thereafter such a halt would be treated accordingly. For example, if during an equipment failure trading halt a significant order imbalance develops, then the Exchange will follow the rules and procedures governing such a condition and the minimum halt period prior to resumption of trading will be fifteen minutes following the first indication after the new halt condition is disseminated.[4]

The Commission finds good cause for approving the proposed rule change prior to the thirtieth day after the date of publication of notice of filing thereof in the **Federal Register**. The Commission believes that accelerated approval of the proposal is appropriate in order to allow the Amex to conform to existing industry practice.

It is therefore ordered, Pursuant to section 19(b)(2) of the Act[5] that the proposed rule change is hereby approved.

For the Commission, by the Division of Market Regulation, pursuant to delegated authority.[6]

[3] 15 U.S.C. 78f(b)(5) (1988).

[4] File No. SR–Amex–93–34 Exhibit A.

[5] 15 U.S.C. 78s(b)(2) (1988).

[6] 17 CFR 200.30–3(a)(12) (1991).

Margaret H. McFarland,
Deputy Secretary.
[FR Doc. 93–30695 Filed 12–15–93; 8:45 am]
BILLING CODE 8010–01–M

[Release No. 34–33314; File No. SR–CHX–93–27]

Self-Regulatory Organizations; Chicago Stock Exchange, Inc.; Order Granting Permanent Approval to Proposed Rule Change to Establish a Policy Concerning the Designated Primary Market Marker and the Registered Market Marker of a Basket

December 9, 1993.

I. Introduction

On October 13, 1993, the Chicago Stock Exchange, Inc. ("CHX" or "Exchange") submitted to the Securities and Exchange Commission ("SEC" or "Commission"), pursuant to section 19(b)(1) of the Securities Exchange Act of 1934 ("Act")[1] and Rule 19b–4 thereunder,[2] a proposed rule change to establish a policy entitling the Designated Primary Market Marker ("DPM") and the Registered Market Makers ("RMMS") to participate in transactions, when both are displaying the same bid or offer price for a Chicago ("CXM") Basket[3], on a two-thirds/one-third parity, respectively, up to the size of their displayed quotations. The Exchange amended the filing November 23, 1993, to clarify that in the event that more than one Market Maker would be entitled to participate pursuant to the proposal, then all Registered Market Markers would be entitled, on aggregate, to participate in the one-third share.[4]

The proposed rule change was approved on a temporary basis for sixty days[5] and was published for comment in Securities Exchange Act Release No. 33058 (October 15, 1993), 58 FR 54388 (October 21, 1993). The sixty-day temporary approval period will expire on December 15, 1993. No comments were received on the proposal.

II. Description of the Proposal

Article XXXIV, Rule 8 of the Exchange's rules presently entitles the RMM (or market markers as a group), when the bids or offers are equal in price to those of the specialist, to participate in the transaction to the extent of one-third of the total shares involved (excluding those needed to satisfy public orders).[6]

The Exchange proposes to adopt an interpretation to this rule to clarify its applicability to interactions between the DPM and the RMM(s) in trading the CXM Basket. Specifically, the proposal provides an additional "Interpretation and Policy" designed to work in concert with the rules and procedures governing the trading of the CXM Basket. The "Interpretation and Policy" is as follows:

.01 When the Designated Primary Market Maker and a Registered Market Marker, as those terms are used in Article XXXVI, are both displaying, through the quotation system, the same bid or offer price for a basket, the Designated Primary Market Market and the Registered Market Maker will be entitled to participate in transactions on a ⅔ to ⅓ parity, respectively, up to the size of their displayed quotations. (i.e., the Designated Primary Market Maker is entitled to twice the size of a Registered Market Maker's order up to the size of the Designated Primary Market Maker's quotation. Conversely, a Registered Market Maker is entitled to participate at ½ the size of the Designated Primary Market Maker's order up to the size of the Registered Market Maker's displayed quotation.) In the event that the Designated Market Maker or a Registered Market Maker has not displayed a size greater than or equal to the size he or she would be entitled to based on the ⅔ to ⅓ parity, the Designated Market Maker or a Registered Market Maker, as the case may be, shall only participate up to their displayed size. In the event that more than one Registered Market Maker is entitled to participate pursuant to this paragraph, the Registered Market Makers as a group are entitled to one-third of the total shares involved.

III. Discussion

The proposed policy has been in effect since the CXM Basket commenced trading on October 15, 1993. During the first thirty days of trading the proposed policy and applicable interpretation have been applied once. At that time, all pertinent participants readily acknowledged the two-thirds/one-third parity and the transaction was split accordingly.[7]

The Commission finds that the proposed rule change is consistent with the requirements of the Act and the rules and regulations thereunder applicable to a national securities exchange, and, in particular, with the requirements of section 6(b).[8] In particular, the Commission believes the proposal is consistent with section 6(b)(5) of the Act in that it is designed to promote just and equitable principles of trade, to prevent fraudulent and manipulative acts, and, in general, to protect investors and the public interest.[9] Moreover, the proposal has been published for public commentary and no adverse comments were received during the statutory comment period.

It is therefore ordered, Pursuant to section 19(b)(2) of the Act,[10] that the proposed rule change (SR–CHX–93–27) is approved.

For the Commission, by the Division of Market Regulation, pursuant to delegated authority.[11]

Margaret H. McFarland,
Deputy Secretary.
[FR Doc. 93–30694 Filed 12–15–93; 8:45 am]
BILLING CODE 8010–01–M

[Release No. 34–33313; File No. SR–CBOE–93–50]

Self-Regulatory Organizations; Filing of Proposed Rule Change by the Chicago Board Options Exchange, Inc., Relating to the Listing and Trading of Options on the Chicago Board Options Exchange Telecommunications Index

December 9, 1993.

Pursuant to section 19(b)(1) of the Securities Exchange Act of 1934 ("Act"), 15 U.S.C. 78s(b)(1), notice is hereby given that on October 27, 1993, the Chicago Board Options Exchange, Inc. ("CBOE" or "Exchange") filed with the Securities and Exchange Commission ("SEC" or "Commission") the proposed rule change as described in Items I, II, and III below, which Items have been prepared by the self-regulatory organization. The Commission is publishing this notice to

---

[1] 15 U.S.C. 78s(b)(1) (1988).

[2] 17 CFR 240.19b–4 (1991).

[3] On October 15, 1993 the Commission approved a set of rules allowing for and governing the trading of standardized baskets on the Exchange Floor, and to trade a specific basket on the Exchange Floor, and to trade a specific basket product—the Chicago Basket ("CXM"). See Securities Exchange Act Release No. 33053 (October 15, 1993), 58 FR 54610 (October 22, 1993).

[4] Letter from David T. Rusoff, Foley & Lardner, to Diana LukaHopson, Branch Chief, Commission, dated November 22, 1993.

[5] See Securities Exchange Act Release No. 33057 (October 15, 1993), 58 FR 54608 (October 22, 1993).

[6] See Chicago Stock Exchange, Inc. Art. XXXIV, Rule 8. Although the language in the rule does not specify that the participation split is to the extent of the published bid, and the situation which would require its application has not arisen to date, the Exchange has impliedly interpreted it in such a fashion. Telephone conversation between David Rusoff, Foley & Lardner, and N. Amy Bilbija, Commission, on November 15, 1993.

[7] Telephone conversation between David Rusoff, Foley & Lardner, and N. Amy Bilbija, Commission, on November 15, 1993.

[8] 15 U.S.C. 78f(b) (1988).

[9] 15 U.S.C. 78f(b)(5) (1988).

[10] 15 U.S.C. 78s(b)(2) (1988).

[11] 17 CFR 200.30–3(a) (12) (1991).

solicit comments on the proposed rule change from interested persons.

I. Self-Regulatory Organization's Statement of the Terms of Substance of the Proposed Rule Change

As provided in Exchange Rule 24.2, "Designation of the Index,"[1] the CBOE proposes to list and trade cash-settled, European-style[2] options on the CBOE Telecommunications Index ("Telecommunications Index" or "Index"). The Index, which will be maintained by the CBOE, is a price-weighted index comprised, currently, of twenty-five low-, medium-, and high-capitalization stocks which are representative of the telecommunications industry.

The text of the proposal is available at the Office of the Secretary, CBOE, and at the Commission.

II. Self-Regulatory Organization's Statement of the Purpose of, and Statutory Basis for, the Proposed Rule Change

In its filing with the Commission, the self-regulatory organization included statements concerning the purpose of and basis for the proposed rule change and discussed any comments it received on the proposed rule change. The text of these statements may be examined at the places specified in Item IV below. The self-regulatory organization has prepared summaries, set forth in sections (A), (B), and (C) below, of the most significant aspects of such statements.

(A) Self-Regulatory Organization's Statement of the Purpose of, and Statutory Basis for, the Proposed Rule Change

The CBOE proposes to list and trade options on the Telecommunications Index, a price-weighted index which will be maintained by the CBOE or its designee and which is comprised, currently, of twenty-five low-, medium-, and high-capitalization stocks which are representative of the telecommunications industry. The CBOE states that the Telecommunications Index represents a segment of the U.S. equity market that is not represented currently in the derivative markets and, as such, will offer investors a low-cost means to achieve diversification or tilt a portfolio toward or away from the telecommunications industry. The CBOE states that the Index will provide retail and institutional investors with a means to benefit from their forecasts of the telecommunications industry's market performance. In addition, the CBOE states that options on the Index may be used by portfolio managers and investors to provide a performance measure and evaluation guide for passively or actively managed telecommunications industry funds, as well as a means of hedging the risks of investing in the telecommunications industry.

Index Design

The Telecommunications Index is a price-weighted index based on twenty-five low-, medium-, and high-capitalization stocks which are representative of the telecommunications industry. Eleven of the Index's component stocks trade currently on the New York Stock Exchange, two trade on the American Stock Exchange, and twelve trade through the facilities of the National Association of Securities Dealers Automated Quotation System ("NASDAQ").[3] The CBOE states that the Index will be calculated on a real-time basis using last-sale prices. As of October 15, 1993, the value of the proposed Index was 180.11.

As of October 15, 1993, the Index's component stocks ranged in capitalization from $808.3 million to $81.2 billion, with median capitalization of $11.4 billion. The largest stock accounted for 6.91% of the total weighting of the Index, while the smallest accounted for 2.27%. Currently, options are listed on all of the Index's component stocks.

Calculation

The Index will be calculated continuously by the CBOE or its designee and will be disseminated every 15 seconds by the CBOE. If a component stock is not being traded currently, the most recently traded price will be used in the Index calculation.

Similar to other industry indexes that have been approved for trading on the CBOE, the Index is price-weighted and reflects changes in the prices of the Index's component stocks relative to the base date. The Index is calculated by summing the prices of the Index's component stocks and dividing by a divisor that yielded an index value of 100.00 as of January 2, 1992.

Maintenance

The Index will be maintained by the CBOE. The Index's divisor will be adjusted to maintain continuity in the Index following an adjustment to a component security. Changes which may result in divisor changes include, but are not limited to, spin-offs, certain rights issuances, and mergers and acquisitions.

The CBOE states that the Index will be reviewed on approximately a monthly basis by the CBOE staff. The CBOE may change the composition of the Index at any time or from time to time to reflect conditions in the telecommunications industry. If a company in the Index is no longer representative of the telecommunications industry, the stock will be removed from the Index. If it becomes necessary to remove a stock from the Index (generally due to a takeover or merger), the CBOE will make every effort to add a stock that is representative of the telecommunications industry. In such circumstances, the CBOE will take into account the capitalization, liquidity, volatility, and name recognition of the proposed replacement stock.

The CBOE will not make any change in the composition of the Index which would result in less than ninety percent of the Index, by weight, consisting of stocks that are not eligible for the listing of standardized individual equity options as provided in CBOE Rule 5.3, "Criteria for Underlying Securities."[4] The CBOE will probably maintain 25 stocks in the Index at all times, and will not increase the number of stocks included in the Index to more than 33, or decrease the number of component stocks to less than 17, absent prior approved by the Commission.

Index Option Trading

The Exchange proposes to base trading in Telecommunications Index options on the full value of the Index. As provided in Exchange Rule 24.9, "Terms of Index Option Contracts," the Exchange may list long-term index option series ("LEAPS") on the Index, which expire from 12 to 36 months are listing. In addition, the Exchange proposes to list reduced-value Index LEAPS which will be computed at one-tenth the value of the Index. The current and closing index value for reduced-value Index LEAPS will be computed by

[1] Exchange Rule 24.2 provides, in part, that the Commission must approve a particular index upon which options are traded.

[2] A European-style option can be exercised only during a specified period before the option expires.

[3] All twelve NASDAQ component stocks are currently qualified for and traded on the NASDAQ National Market.

[4] The CBOE's options listing standards, which are uniform among the options exchanges, provide generally that a security underlying an option must, among other things, meet the following requirements: (1) The public float must be at least 7,000,000; (2) there must be a minimum of 2,000 stockholders; (3) trading volume must have been at least 2.4 million over the preceding twelve months; and (4) the market price must have been at least $7.50 for a majority of the business days during the preceding three calendar months.

dividing the Index value by ten and rounding the resulting figure to the nearest one-hundredth. Other than the reduced value, all other specifications and calculations for reduced-value Index LEAPS will remain the same. Pursuant to Exchange Rule 24.3, "Dissemination of Information," the reduced-value Index LEAPS will be continuously calculated and disseminated.

Exercise and Settlement

Index options will have European-style exercise and will be "A.M. settled index options" within the meaning of chapter XXIV of the CBOE's rule.[5] The CBOE proposes to amend CBOE Rule 24.9, "Terms of Index Option Contracts," to refer specifically to Index options. The CBOE states that the proposed options will expire on the Saturday following the third Friday of the expiration month. Thus, the last day for trading in an expiring series will be the second business day (ordinarily a Thursday) preceding the expiration date.

Exchange Rules Applicable to Industry Index Options

Because the Index is classified as an industry index[6] under CBOE rules, the provisions of chapter XXIV of the CBOE rules which are applicable to the trading of options on narrow-based indexes will apply to the trading of Index options and Index LEAPS, including, specifically, Exchange rules governing margin requirements, position and exercise limits, and trading halt procedures. In addition, for purposes of determining whether a position in Index LEAPS complies with applicable position and exercise limits, positions in Index LEAPS will be aggregated with positions in Index options. Under the proposal, ten reduced-value Index LEAPS contracts will equal one full-value contract for purposes of aggregating the positions.

The CBOE represents that it has the necessary systems capacity to support new series that would result from the introduction of Index options.

The CBOE believes that the proposed rule change is consistent with section 6(b) of the Act, in general, and furthers the objectives of section 6(b)(5), in particular, in that it is designed to promote just and equitable principles of trade and to protect investors and the public interest.

(B) Self-Regulatory Organization's Statement on Burden on Competition

The CBOE does not believe that the proposed rule change will impose any burden on competition.

(C) Self-Regulatory Organization's Statement on Comments on the Proposed Rule Change Received From Members, Participants or Others

No written comments were solicited or received with respect to the proposed rule change.

III. Date of Effectiveness of the Proposed Rule Change and Timing for Commission Action

Within 35 days after the publication of this notice in the **Federal Register** or within such longer period (i) as the Commission may designate up to 90 days of such date if it finds such longer period to be appropriate and publishes its reason for so finding or (ii) as to which the self-regulatory organization consents, the Commission will:

(a) By order approve such proposed rule change, or

(b) Institute proceedings to determine whether the proposed rule change should be disapproved.

IV. Solicitation of Comments

Interested persons are invited to submit written data, views and arguments concerning the foregoing. Persons making written submissions should file six copies thereof with the Secretary, Securities and Exchange Commission, 450 Fifth Street, NW., Washington, DC 20549. Copies of the submission, all subsequent amendments, all written statements with respect to the proposed rule change that are filed with the Commission, and all written communications relating to the proposed rule change between the Commission and any person, other than those that may be withheld from the public in accordance with the provisions of 5 U.S.C. 552, will be available for inspection and copying at the Commission's Public Reference Section 450 Fifth Street NW., Washington, DC.

Copies of such filing will also be available for inspection and copying at the principal office of the above-mentioned self-regulatory organization. All submissions should refer to the file number in the caption above and should be submitted by January 6, 1994.

For the Commission, by the Division of Market Regulation, pursuant to delegated authority.[7]

Margaret H. McFarland,

Deputy Secretary.

[FR Doc. 93-30622 Filed 12-15-93; 8:45 am]

BILLING CODE 8010-01-M

[5] Under CBOE Rule 24.9, A.M.-settled index options are settled based on an index value derived from opening prices on the last day of trading prior to expiration.

[6] Under CBOE Rule 24.1, "Definitions," the terms "industry index" and "narrow-based index" mean an index designed to be representative of a particular industry or a group of related industries. See Securities Exchange Act Release No. 32243 (April 29, 1993), 58 FR 26996 (order approving File No. SR-CBOE-92-29).

[7] 17 CFR 200.30-3(a)(12) (1993).

[Release No. 34-33307; File No. SR-NASD-93-59]

Self-Regulatory Organizations; National Association of Securities Dealers, Inc.; Order Approving Proposed Rule Change Relating to Elimination of the Professional Trading Account Rules for the Small Order Execution System

December 9, 1993.

On October 15, 1993, the National Association of Securities Dealers, Inc. ("NASD" or "Association") filed with the Securities and Exchange Commission ("SEC" or "Commission") a proposed rule change pursuant to section 19(b)(1) of the Securities Exchange Act of 1934 ("Act")[1] and Rule 19b-4 thereunder.[2] The proposal eliminates the professional trading account rules found in the Rules of Practice and Procedure for the Small Order Execution System ("SOES Rules").[3]

Notice of the proposed rule change appeared in the **Federal Register** on October 22, 1993.[4] The Commission received 407 letters commenting on the proposal, as discussed below. This order approves the rule change.

The NASD adopted the professional trading account rules in 1988,[5] and amended these rules in 1991.[6] The Commission's approval of certain aspects of these rules was challenged on appeal to the U.S. Court of Appeals for the District of Columbia Circuit, which remanded the matter to the Commission in 1993 to consider, among other things, whether the professional trading account rules are unacceptably vague.[7] In light of these concerns, the NASD

[1] 15 U.S.C. 78s(b)(1) (1988).

[2] 17 CFR 240.19b-4 (1993).

[3] See NASD Manual, SOES Rules, Secs. (a)(10)-(11) and (c)(3)(E)-(F), (CCH) ¶¶ 2451, 2460.

[4] Securities Exchange Act Release No. 33059 (October 15, 1993), 58 FR 54621.

[5] Securities Exchange Act Release No. 26361 (December 15, 1988), 53 FR 51605 (December 22, 1988).

[6] Securities Exchange Act Release No. 29809 (October 10, 1991), 56 FR 52092 (October 17, 1991).

[7] *Timpinaro, et al.* v. *SEC*, 2 F.3d. 453 (D.C. Cir. 1993). Although the Court did not vacate the Commission's approval of the professional trading account rules, the Court remanded the rules to the Commission for further explanation and analysis.

decided to withdraw the professional trading account rules.

The proposal would remove current restrictions on professional trading accounts and provisions governing the designation of these accounts. The NASD's "professional trading account" rules, being withdrawn today, prohibit members from entering orders in SOES on behalf of certain accounts. "Professional trading account" is defined to include any account in which five or more "day trades" have been executed through SOES during any trading day. Under the NASD's SOES rules, "day trades" occur where either one or both sides of offsetting trades is executed through SOES in the same security for generally the same size during the same trading day.[8] A "professional trading account" also includes an account that exhibits a pattern of professional trading using SOES. The NASD's SOES rules define "professional trading pattern" to include (1) the pattern or practice of executing day trades; (2) executing a high volume of day trades in relation to total transactions in the account; (3) the execution of a high volume of day trades in relation to the amount and value of securities held in the account; (4) excessive frequency of short-term trading; (5) excessive frequency of short sale transactions; (6) existence of discretion; and (7) direct or physical access to SOES execution capability or to quotations services that provide a real-time display of all market maker quotes in Nasdaq.[9]

The Commission most recently approved changes to the SOES rules in 1991. On appeal, the Court of Appeals acknowledged, with respect to the professional trading account rule, that the Commission had proceeded from a "sound theory of market behavior." The court, however, remanded without vacating the professional trading account rule. In doing so, the court expressed concern that five of the seven criteria used by the NASD to identify professional trading accounts are "subject to seemingly open-ended interpretations." [10] In light of these concerns, the NASD has proposed to eliminate the rules.

As noted, the Commission has received 407 letters commenting on the NASD's proposal. These letters raise no objections to the NASD's proposal.[11]

The Commission believes the proposal is consistent with the Act, and, in particular, the goal of a free and open market, as contemplated by section 15A(b)(6). The proposal will provide greater certainty to investors regarding their ability to use SOES.

For the reasons stated above, the Commission finds that the proposed rule change is consistent with the requirements of the Act and the rules and regulations thereunder applicable to the NASD and, in particular, the requirements of section 15A(b)(6) of the Act.[12]

It is therefore ordered, Pursuant to section 19(b)(2) of the Act, that the proposed rule change SR-NASD-93-59 be, and hereby is approved.

By the Commission,

Margaret H. McFarland,

Deputy Secretary.

[FR Doc. 93-30623 Filed 12-15-93; 8:45 am]

BILLING CODE 8010-01-M

[8] The NASD is also withdrawing the definition of "day trade" and "day trading." See NASD Manual, SOES Rules, Sec. (a)(11), (CCH) ¶ 2451.

[9] NASD Manual, SOES Rules, Sec. (a)(10), (CCH) ¶ 2451.

[10] Specifically, the court identified the following sections of the rule as points of concern. Secs. (a)(10)(B)(1)-(5), (CCH) ¶ 2451.

[11] Many of these letters, however, mention another rule change pending before the Commission, which proposes further modifications to SOES ("File No. SR-NASD-93-16"). See Securities Exchange Act Release No. 32143 (April 14, 1993), 58 FR 21484 (April 21, 1993) (publishing File No. SR-NASD-93-16 for comment). Commenters question whether the NASD's filing of the instant rule change is in fact connected with the Commission's consideration of the modifications proposed in File No. SR-NASD-93-16, and whether the Commission has conditioned approval of SR-NASD-93-16 on the NASD's withdrawal of the professional trading account rules. The Commission has evaluated the instant rule change against the statutory standards of the Act. The Commission does not believe that its role under Section 19 of the Act would preclude it from making its approval contingent on such a condition. Nonetheless, the Commission has not conditioned action on the rule change in File No. SR-MASD-93-16 on the filing of this proposal.

[12] 15 U.S.C. 78o-3(b)(6).

[Investment Company Act Rel. No. 19945; 811-4742]

Kidder, Peabody Exchange Money Fund; Application for Deregistration

December 9, 1993.

AGENCY: Securities and Exchange Commission ("SEC").

ACTION: Notice of application for deregistration under the Investment Company Act of 1940 ("Act").

APPLICANT: Kidder, Peabody Exchange Money Fund.

RELEVANT ACT SECTION: Section 8(f).

SUMMARY OF APPLICATION: Applicant seeks an order declaring that it has ceased to be an investment company.

FILING DATE: The application was filed on December 3, 1993.

HEARING OR NOTIFICATION OF HEARING: An order granting the application will be issued unless the SEC orders a hearing. Interested persons may request a hearing by writing to the SEC's Secretary and serving applicant with a copy of the request, personally or by mail. Hearing requests should be received by the SEC by 5:30 p.m. on January 3, 1994 and should be accompanied by proof of service on applicant, in the form of an affidavit or, for lawyers, a certificate of service. Hearing requests should state the nature of the writer's interest, the reason for the request, and the issues contested. Persons who wish to be notified of a hearing may request such notification by writing to the SEC's Secretary.

ADDRESSES: Secretary, SEC, 450 Fifth Street, NW., Washington, DC 20549. Applicant, 60 Broad Street, New York, New York 10004.

FOR FURTHER INFORMATION CONTACT: James E. Anderson, Staff Attorney, at (202) 272-7027, or C. David Messman, Branch Chief, at (202) 272-3018 (Division of Investment Management, Office of Investment Company Regulation).

SUPPLEMENTARY INFORMATION: The following is a summary of the application. The complete application may be obtained for a fee from the SEC's Public Reference Branch.

Applicant's Representations

1. Applicant is a diversified open-end management investment company organized as a Massachusetts business trust. On July 7, 1986, applicant filed a notification of registration pursuant to section 8(a) of the Act and a registration statement pursuant to the Securities Act of 1933. The registration statement became effective on October 6, 1986, and applicant commenced its initial public offering on November 24, 1986.

2. On February 5, 1993, applicant's trustees approved a plan to liquidate applicant's assets and distribute the proceeds in the form of cash to applicant's shareholders. Preliminary and definitive proxy materials soliciting shareholder approval of the reorganization were filed with the SEC. Proxy materials were distributed on or about May 7, 1993 to applicant's shareholders of record as of April 15, 1993. The liquidation was approved, in accordance with Massachusetts law, by applicant's shareholders at a meeting held on June 24, 1993. The meeting had been adjourned from June 11, 1993 because an insufficient number of shares had been voted to obtain a quorum.

3. On June 24, 1993, the liquidation was completed. As of that date, applicant had a total net asset value of $2,320,669, and a per share net asset value of $1.00. Applicant's assets consisted of U.S. government agency discount notes. Applicant's investment adviser received competitive bids from three investment houses and sold the securities at the market price. No brokerage commissions were paid on these transactions. On June 25, 1993, applicant distributed all its assets to its shareholders who received liquidating distributions equal to their proportionate share of applicant. Each shareholder received $1 per share, plus accrued interest of $.001973 per share.

4. All expenses incurred in connection with the liquidation, consisting of legal, accounting, printing, and other expenses, were borne by Kidder Peabody Asset Management, Inc. and Kidder/Peabody & Co. Incorporated, applicant's investment adviser and principal underwriter, respectively.

5. As of the date of the amended application, applicant had no shareholders, assets, or liabilities. Applicant is not a party to any litigation or administrative proceeding. Applicant is not presently engaged in, nor does it propose to engage in, any business activities other than those necessary for the winding up of its affairs.

For the SEC, by the Division of Investment Management, under delegated authority.

Margaret H. McFarland,

Deputy Secretary.

[FR Doc. 93-30624 Filed 12-15-93; 8:45 am]

BILLING CODE 8010-01-M

[Release No. IC-19943; 812-8656]

State Mutual Life Assurance Co. of America et al.; Application for Exemptions

December 9, 1993.

AGENCY: Securities and Exchange Commission (the "SEC" or "Commission").

ACTION: Notice of application for exemptions under the Investment Company Act of 1940 (the "1940 Act").

APPLICANTS: State Mutual Life Assurance Company of America ("State Mutual"), State Mutual Separate Account VA-K ("Account VA-K"), and Allmerica Investments, Inc.

RELEVANT 1940 ACT SECTIONS: Order requested under section 6(c) from sections 26(a)(2)(C) and 27(c)(2).

SUMMARY OF APPLICATION: Applicants seek an order to permit State Mutual to deduct a mortality and expense risk charge from the assets of Account VA-K, which funds certain group and individual combination fixed/variable annuity contracts.

FILING DATES: The application was filed on October 29, 1993.

HEARING OR NOTIFICATION OF HEARING: An order granting the application will be issued unless the SEC orders a hearing. Interested persons may request a hearing by writing to the SEC's Secretary and serving Applicants with a copy of the request, personally or by mail. Hearing requests should be received by the SEC by 5:30 p.m. on January 3, 1994, and should be accompanied by proof of service on the Applicants in the form of an affidavit or, for lawyers, a certificate of service. Hearing requests should state the nature of the writer's interest, the reason for the request, and the issues contested. Persons may request notification of a hearing by writing to the SEC's Secretary.

ADDRESSES: Secretary, SEC, 450 5th Street, NW., Washington, DC, 20549. State Mutual, c/o Joseph W. MacDougall, Jr., 440 Lincoln Street, Worcester, Massachusetts 01653.

FOR FURTHER INFORMATION CONTACT: C. Christopher Sprague, Senior Staff Attorney, at (202) 504-2802, or Michael V. Wible, Special Counsel, at (202) 272-2026, Office of Insurance Products, Division of Investment Management.

SUPPLEMENTARY INFORMATION: The following is a summary of the application. The complete application is available for a fee from the SEC's Public Reference Branch.

Applicants' Representations

1. State Mutual is a mutual life insurance company that was incorporated under the laws of Massachusetts in 1844. State Mutual is authorized to conduct business as an insurance company in all states and in the District of Columbia, Puerto Rico, and the U.S. Virgin Islands. State Mutual is the depositor and sponsor of Account VA-K.

2. Account VA-K was authorized by State Mutual's board of directors on August 20, 1991 pursuant to Massachusetts law, and is organized as a unit investment trust under the 1940 Act. The assets of Account VA-K are the property of State Mutual, although such assets are held separately from State Mutual's other assets and are not chargeable with liabilities incurred in any other business operation of State Mutual, except to the extent that such assets exceed the reserves and other liabilities of Account VA-K. The income, gains, and losses of each subaccount of Account VA-K (a "Subaccount") will be credited to or charged against such Subaccount without regard to any income, gains, or losses arising out of any other Subaccount.

3. Account VA-K presently consists of 23 Subaccounts, although other Subaccounts may be added in the future. Nine of the Subaccounts will invest in the following series of Allmerica Investment Trust (the "Trust"), a diversified, open-end management investment company: the Growth Fund, Investment Grade Income Fund, Money Market Fund, Equity Index Fund, Government Bond Fund, Select Aggressive Growth Fund, Select Growth Fund, Select Growth and Income Fund, and Small Gap Value Fund. Four Subaccounts will invest in the following four portfolios of Variable Insurance Products Fund ("VIPF") an open-end management investment company: High Income Portfolio, Equity-Income Portfolio, Growth Portfolio, and Overseas Portfolio. Ten Subaccounts will invest in the following nine series of Delaware Group Premium Fund, Inc. ("DGPF"), an open-end management investment company: Equity/Income Series, High Yield Series, Capital Reserve Series, Money Market Series, Growth Series, Multiple Strategy Series, International Equity Series (two Subaccounts invest in this series), Value Series, and Emerging Growth Series. Certain of the group and individual combination fixed/variable annuity contracts (the "Contracts"), which are known as the "Delaware Medallion Contracts," allocate purchase payments only to DGPF. Under Contracts other than the Delaware Medallion Contracts, purchase payments are allocated to the Trust, VIPF, and the International Equity Series of DGPF.

4. Allmerica Investments, Inc., a registered broker/dealer, is the principal underwriter for the Contracts. Allmerica Investments, Inc. is an indirect, wholly-owned subsidiary of State Mutual.

5. The Contracts may be issued to retirement plans that qualify for special federal income tax treatment under sections 401, 403, 408, and 457 of the Internal Revenue Code, to retirement plans that do not qualify for such tax treatment, and to individuals. The initial purchase payment under a Contract must be at least $600 and any subsequent payment must be at least $50, although there is no limitation as to the frequency of purchase payments. Contract owners generally may invest in any one or more of the Subaccounts, and also may invest in the fixed account, which is part of State Mutual's general account.

6. Prior to the annuity commencement date, State Mutual assesses an annual Contract Charge, which is equal to $30 for the Delaware Medallion Contracts and to the lesser of $30 or 3% of accumulated value for all other Contracts. The Contract Charge will be deducted at each Contract anniversary and at full surrender or annuitization during a Contract Year. No Contract Charge is deducted when a Contract's accumulated value is greater than $50,000. State Mutual does not expect to realize a profit from this charge, and guarantees that the amount of the charge will not increase over the life of the Contract.

7. For furnishing certain administrative and clerical services to Account VA-K, State Mutual makes a daily charge equal on an annual basis to 0.20% (0.15% for the Delaware Medallion Contracts) of the current value of the Subaccounts. State Mutual does not expect to make a profit from this charge, and guarantees that the level of the charge will not increase.

8. Prior to the annuity commencement date, amounts held under the Contracts may be transferred among the Subaccounts and State Mutual's general account. State Mutual currently makes no charge for such transfers, although it reserves the right to assess a charge, guaranteed never to exceed $25. State Mutual makes a deduction for state and municipal premium taxes, if applicable.

9. No front-end sales charge is deducted from purchase payments under the Contracts, although a contingent deferred sales charge is imposed for any contract surrender, partial redemption, or annuitization under some period certain options. To determine the amount of the contingent deferred sales charge, the Contract's accumulated value is divided into three categories: (a) New Payments, which are defined as purchase payments received by State Mutual during the nine years prior to the date of full surrender, partial redemption, or annuitization (seven years for the Delaware Medallion Contracts); (b) Old Payments, which are purchase payments other than New Payments; and (c) Earnings, which equal the amount of accumulated value in excess of all purchases payments that have not been previously surrendered. Surrenders will be deemed to be taken first from Old Payments, then from New Payments, and then from Earnings. Old payments may be withdrawn at any time without the imposition of a contingent deferred sales charge. To calculate the sales charge applicable to New Payments, all amounts withdrawn are assumed to be deducted first from the earliest New Payment, and then from the next earliest New Payment and so on, until all New Payments have been exhausted pursuant to the FIFO method of accounting. Subsequent withdrawals will be deducted from Earnings. For the Delaware Medallion Contracts, the contingent deferred sales charge is 7% for payments that are 0–3 years old and declines by one percent each year thereafter; there is no charge applied to payments that are more than 7 years old. Under all other Contracts, the contingent deferred sales charge starts at 8% for payments that are 0–2 years old, and declines by one percent per year thereafter. In no event will the contingent deferred sales charges assessed against a Contract exceed 8% of the gross New Payments.

10. In each calendar year, State Mutual will waive the contingent deferred sales charge, if any, on an amount equal to a given percentage of the Contract's accumulated value (the "10% Withdrawal Amount"). Generally, the 10% Withdrawal Amount will equal the greater of: (a) 10% of the accumulated value under a Contract as of December 31 of the previous year, or (b) the amount calculated under State Mutual's life expectancy distribution.

11. State Mutual acknowledges that the contingent deferred sales charge may not be sufficient to cover all sales expenses. In such a case, the costs of distribution will be paid from the assets of State Mutual's general account, which may include any profit derived from the mortality and expense risk charge.

12. State Mutual seeks to impose a daily mortality and expense risk charge equal to 1.25% annually of the net asset value of each Subaccount of Account VA-K. State Mutual estimates that 0.80% of the charge is attributable to its assumption of mortality risks and 0.45% is attributable to its assumption of expense risks. The mortality risk arises from the following guarantees made by State Mutual: (a) That it will make annuity payments, in accordance with annuity rate provisions established within the Contract at the time it is issued, for the life of the annuitant (or in accordance with the annuity option selected), no matter how long the annuitant or other payee lives and no matter how long all annuitants as a class live, and (b) that it will pay the special death benefit available under the Contract prior to annuitization. The expense risk arises because of State Mutual's guarantee that the charges it makes will never exceed the limits described in the Contracts. Applicants represent that the level of the mortality and expense risk charge is guaranteed and will not increase. If the mortality and expense risk charge is insufficient to cover State Mutual's mortality costs and excess expenses, State Mutual will bear the loss. If the mortality and expenses risk charge is more than sufficient to cover such mortality costs and excess expenses, State Mutual will retain the balance as profit. Any such profit, as well as any other profit realized by State Mutual and held in its general account, would be used for any proper corporate purpose, including payment of distribution expenses.

Applicants' Legal Analysis

1. Applicants request that the Commission, pursuant to section 6(c) of the 1940 Act, grant exemptions from the provisions described below to the extent necessary to permit the assessment of the daily charge for mortality and expense risks. Applicants state that the requested exemptions are appropriate in the public interest and consistent with the protection of investors and the purposes fairly intended by the policy and provisions of the 1940 Act.

2. Section 26(a)(2)(C) provides that no payment to the depositor of, or principal underwriter for, a registered unit investment trust shall be allowed the trustee or custodian as an expense except compensation, not exceeding such reasonable amount as the Commission may prescribe, for performing bookkeeping and other administrative duties normally performed by the trustee or custodian. Section 27(c)(2) prohibits a registered investment company or a depositor or underwriter for such company from selling periodic payment plan certificates unless the proceeds of all payments on such certificates, other than sales loads, are deposited with a trustee or custodian having the qualifications prescribed in section 26(a)(1), and are held by such trustee or custodian under an agreement containing substantially the provisions required by sections 26(a)(2) and 26(a)(3) of the 1940 Act. Applicants request an exemptive order because the proposed mortality and expense risk charge is not a bookkeeping or administrative charge allowed by sections 26(a)(2) and 27(c)(2).

3. Applicants represent that the mortality and expense risk charge is within the range of industry practice with respect to comparable annuity products. This representation is based upon State Mutual's comparative survey of publicly available information about similar industry products, taking into consideration such factors as current charge levels, the existence of charge level guarantees, and guaranteed annuity rates. State Mutual will

maintain at its administrative offices and make available to the Commission a memorandum setting forth in detail the products analyzed in the course of, and the methodology and results of, its comparative survey.

4. State Mutual has concluded that there is a reasonable likelihood that the proposed distribution financing arrangements will benefit Account VA–K and the Contract owners. The contingent deferred sales charge is imposed only if a Contract owner makes a full or partial redemption under the Contract, or in some instances upon annuitization. Therefore, a contingent deferred sales charge may be more advantageous to an investor than a front-end sales charge or other type of charge because a greater amount of each purchase payment is invested on behalf of the Contract owner, who may not be subject to any sales load if the investment is retained for the requisite period. State Mutual will maintain at its administrative offices and make available to the Commission a memorandum setting forth the basis for the conclusion that there is a reasonable likelihood that Account VA–K's distribution financing arrangements might benefit Account VA–K and the Contract owners.

5. State Mutual represents that Account VA–K will only invest in management investment companies which undertake, in the event such company adopts a plan under Rule 12b–1 to finance distribution expenses, to have a Board of Trustees (or Directors), a majority of whom are not interested persons of such investment company, formulate and approve any such plan under Rule 12b–1. b

Applicants' Conclusion

Applicants request exemptions from sections 26(a)(2)(C) and 27(c)(2) to the extent necessary to permit them to deduct on a daily basis a charge equal to 1.25% annually of the assets of Account VA–K for the assumption of mortality and expense risks described herein. For the reasons set forth above, Applicants believe that the exemptions requested are necessary and appropriate in the public interest and consistent with the protection of investors and the purposes fairly intended by the policy and provisions of the 1940 Act.

For the Commission, by the Division of Investment Management, under delegated authority.

Margaret H. McFarland,

Deputy Secretary.

[FR Doc. 93–30625 Filed 12–15–93; 8:45 am]

BILLING CODE 8010–01–M

[Release No. IC–19944; 812–8660]

State Mutual Life Assurance Company of America et al.

December 9, 1993.

AGENCY: Securities and Exchange Commission (the "SEC" or "Commission").

ACTION: Notice of application for exemptions under the Investment Company Act of 1940 (the "1940 Act").

APPLICANTS: State Mutual Life Assurance Company of America ("State Mutual"), Allmerica Select Separate Account (the "Separate Account"), and Allmerica Investments, Inc.

RELEVANT 1940 ACT SECTION: Order requested under section 6(c) from sections 26(a)(2)(C) and 27(c)(2).

SUMMARY OF APPLICATION: Applicants seek an order to permit State Mutual to deduct a mortality and expense risk charge from the assets of the Separate Account, which funds certain group and individual combination fixed/variable annuity contracts.

FILING DATE: The application was filed on October 29, 1993.

HEARING OR NOTIFICATION OF HEARING: An order granting the application will be issued unless the SEC orders a hearing. Interested persons may request a hearing by writing to the SEC's Secretary and serving the Applicants with a copy of the request, personally or by mail. Hearing requests should be received by the SEC by 5:30 p.m. on January 3, 1994, and should be accompanied by proof of service on the Applicants in the form of an affidavit or, for lawyers, a certificate of service. Hearing requests should state the nature of the writer's interest, the reason for the request, and the issues contested. Persons may request notification of a hearing by writing to the SEC's Secretary.

ADDRESSES: Secretary, SEC, 450 5th Street, NW., Washington, DC 20549. State Mutual, c/o Joseph W. MacDougall, Jr., 440 Lincoln Street, Worcester, Massachusetts 01653.

FOR FURTHER INFORMATION CONTACT: C. Christopher Sprague, Senior Staff Attorney, at (202) 504–2802, or Michael V. Wible, Special Counsel, at (202) 272–2026, Office of Insurance Products, Division of Investment Management.

SUPPLEMENTARY INFORMATION: The following is a summary of the application. The complete application is available for a fee from the SEC's Public Reference Branch.

Applicant's Representations

1. State Mutual is a mutual life insurance company that was incorporated under the laws of Massachusetts in 1844. State Mutual is authorized to conduct business as an insurance company in all states and in the District of Columbia, Puerto Rico, and the U.S. Virgin Islands. State Mutual is the depositor and sponsor of the Separate Account.

2. The Separate Account was authorized by State Mutual's board of directors on August 20, 1991 pursuant to Massachusetts law, and is organized as a unit investment trust under the 1940 Act. The assets of the Separate Account are the property of State Mutual, although such assets are held separately from State Mutual's other assets and are not chargeable with liabilities incurred in any other business operation of State Mutual, except to the extent that such assets exceed the reserves and other liabilities of the Separate Account. The income, gains, and losses of each subaccount of the Separate Account (a "Subaccount") will be credited to or charged against such Subaccount without regard to any income, gains, or losses arising out of any other Subaccount.

3. The Separate Account presently consists of five Subaccounts, although other Subaccounts may be added in the future. The Subaccounts will invest in the following portfolios of Allmerica Investment Trust (the "Trust"), a diversified, open-end management investment company: Select Aggressive Growth Fund, Select Growth Fund, Select Growth and Income Fund, Select Income Fund, and Money Market Fund. Allmerica Investment Management Company, Inc. serves as the investment manager to the Trust.

4. Allmerica Investments, Inc., a registered broker/dealer, is the principal underwriter for the group and individual combination fixed/variable annuity contracts (the "Contracts"). Allmerica Investments, Inc. is an indirect, wholly-owned subsidiary of State Mutual.

5. The Contracts may be issued to retirement plans that qualify for special federal income tax treatment under section 401, 403, 408, and 457 of the Internal Revenue Code, to retirement plans that do not qualify for such tax treatment, and to individuals. The initial purchase payment under a Contract must be at least $10,000 (or such smaller amount as meets State Mutual's then current minimum requirements) and any subsequent payment must be at least $50. There is no limitation as to the frequency of purchase payments. Contract owners may invest in any one or more of the Subaccounts, and also may invest in the

fixed account, which is part of State Mutual's general account.

6. Prior to the annuity commencement date, State Mutual assesses an annual Contract Charge equal to $30. The Contract Charge will be deducted at each Contract anniversary and at full surrender of the Contract. State Mutual does not expect to realize a profit from this charge, and guarantees that the amount of the charge will not increase.

7. For furnishing certain administrative and clerical services to the Separate Account, State Mutual makes a daily charge equal on an annual basis to 0.15% of the current value of the Subaccounts. State Mutual does not expect to make a profit from this charge, and guarantees that the level of the charge will not increase.

8. Prior to the annuity commencement date, amounts held under the Contracts may be transferred among the Subaccounts and State Mutual's general account. Currently, the first twelve transfers in a Contract year may be made without charge. For the thirteenth and each subsequent transfer in a Contract year, there is a charge of $25. State Mutual reserves the right to limit to six the total number of transfers and the number of free transfers in a Contract year. State Mutual makes a deduction for state and municipal premium taxes, if applicable.

9. No front-end sales charge is deducted from purchase payments under the Contracts, although a contingent deferred sales charge is imposed for any contract surrender, partial redemption, or annuitization under some period certain options. To determine the amount of the contingent deferred sales charge, the Contract's accumulated value is divided into three categories: (a) New Purchase Payments, which are defined as purchase payments received by State Mutual during the seven years prior to the date of full surrender, partial redemption, or annuitization; (b) Old Purchase Payments, which are purchase payments other than New Purchase Payments; and (c) Earnings, which equal the amount of accumulated value in excess of all purchase payments that have not been previously surrendered. Redemptions will be deemed to be made first from Old Purchase Payments, then from New Purchase Payments, and then from Earnings. Old Purchase Payments and Earnings may be withdrawn at any time without the imposition of a contingent deferred sales charge. To calculate the sales charge applicable to New Purchase Payments, all amounts withdrawn are assumed to be deducted first from the earliest New Purchase Payment, and then from the next earliest New Purchase Payment and so on, until all New Purchase Payments have been exhausted, pursuant to the FIFO method of accounting. The contingent deferred sales charge is 6.5% for payments that are 0–1 years old, 6% for payments that are two years old, and declines by one percent each year thereafter; there is no charge applied to payments that are more than 7 years old. In no event will the contingent deferred sales charges assessed against a Contract exceed 6.5% of the gross new Purchase Payments. In each calendar year, State Mutual will permit withdrawal of a portion of Contract value (generally equal to 10% of accumulated value) free of any contingent deferred sales charge.

10. State Mutual acknowledges that the contingent deferred sales charge may not be sufficient to cover all sales expenses. In such a case, the costs of distribution will be paid from the assets of State Mutual's general account, which may include any profit derived from the mortality and expense risk charge.

11. State Mutual seeks to impose a daily mortality and expense risk charge equal to 1.25% annually of the net asset value of each Subaccount of the Separate Account. State Mutual estimates that 0.80% of the charge is attributable to its assumption of mortality risks and 0.45% is attributable to its assumption of expense risks. The mortality risk arises from the following guarantees made by State Mutual: (a) That it will make annuity payments, in accordance with annuity rate provisions established within the Contract at the time it is issued, for the life of the annuitant (or in accordance with the annuity option selected), no matter how long the annuitant or other payee lives and no matter how long all annuitants as a class live, and (b) that the annuitant death benefit may exceed the value of the Contract. The expense risk arises because of State Mutual's guarantee that the charges it makes will never exceed the limits described in the Contracts. Applicants represent that the level of the mortality and expense risk charge is guaranteed and will not increase. If the mortality and expense risk charge is insufficient to cover State Mutual's mortality costs and excess expenses, State Mutual will bear the loss. If the mortality and expense risk charge is more than sufficient to cover such mortality costs and excess expenses, State Mutual will retain the balance as profit. Any such profit, as well as any other profit realized by State Mutual and held in its general account, would be used for any proper corporate purpose, including payment of distribution expenses.

Applicants' Legal Analysis

1. Applicants request that the Commission, pursuant to section 6(c) of the 1940 Act, grant exemptions from the provisions described below to the extent necessary to permit the assessment of the daily charge for mortality and expense risks. Applicants state that the requested exemptions are appropriate in the public interest and consistent with the protection of investors and the purposes fairly intended by the policy and provisions of the 1940 Act.

2. Section 26(a)(2)(C) provides that no payment to the depositor of, or principal underwriter for, a registered unit investment trust shall be allowed the trustee or custodian as an expense except compensation, not exceeding such reasonable amount as the Commission may prescribe, for performing bookkeeping and other administrative duties normally performed by the trustee or custodian. Section 27(c)(2) prohibits a registered investment company or a depositor or underwriter for such company from selling periodic payment plan certificates unless the proceeds of all payments on such certificates, other than sales loads, are deposited with a trustee or custodian having the qualifications prescribed in section 26(a)(1), and are held by such trustee or custodian under an agreement containing substantially the provisions required by section 26(a)(2) and 26(a)(3) of the 1940 Act. Applicants request an exemptive order because the proposed mortality and expense risk charge is not a bookkeeping or administrative charge allowed by sections 26(a)(3) and 27(c)(2).

3. Applicants represent that the mortality and expense risk charge is within the range of industry practice with respect to comparable annuity products. This representation is based upon State Mutual's comparative survey of publicly available information about similar industry products, taking into consideration such factors as current charge levels, the existence of charge level guarantees, and guaranteed annuity rates. State Mutual will maintain at its administrative offices and make available to the Commission a memorandum setting forth in detail the products analyzed in the course of, and the methodology and results of, its comparative survey.

4. State Mutual has concluded that there is a reasonable likelihood that the proposed distribution financing arrangements will benefit the Separate Account and the Contract owners. The contingent deferred sales charge is imposed only if a Contract owner makes

a full or partial redemption under the Contract, or in some instances upon annuitization. Therefore, a contingent deferred sales charge may be more advantageous to an investor than a front-end sales charge or other type of charge because a greater amount of each purchase payment is invested in behalf of the Contract owner, who may not be subject to any sales load if the investment is retained for the requisite period. State Mutual will maintain at its administrative offices and make available to the Commission a memorandum setting forth the basis for the conclusion that the Separate Account's distribution financing arrangements might benefit the Separate Account's distribution financing arrangements might benefit the Separate Account and the Contract owners.

5. State Mutual represents that the Separate Account will only invest in management investment companies which undertake, in the event such company adopts a plan under Rule 13b–1 to finance distribution expenses, to have a Board of Trustees (or Directors), a majority of whom are not interested persons of such investment company, formulate and approve any such plan under Rule 12b–1.

Applicants' Conclusion

Applicants request exemptions from sections 26(a)(2)(C) and 27(c)(2) to the extent necessary to permit them to deduct on a daily basis a charge equal to 1.25% annually of the assets of the Separate Account for the assumption of mortality and expense risks described herein. For the reasons set forth above, Applicants believe that the exemptions requested are necessary and appropriate in the public interest and consistent with the protection of investors and the purposes fairly intended by the policy and provisions of the 1940 Act.

For the Commission, by the Division of Investment Management, under delegated authority.

Margaret H. McFarland,

Deputy Secretary.

[FR Doc. 93–30626 Filed 12–15–93; 8:45 am]

BILLING CODE 8010-01-M

[Rel. No. IC–19946; 812–8646]

Voyageur Tax Free Funds, Inc., et al.; Application

December 10, 1993.

AGENCY: Securities and Exchange Commission ("SEC").

ACTION: Notice of application for exemption under the Investment Company Act of 1940 (the "Act").

APPLICANTS: Voyageur Tax Free Funds, Inc., Voyageur Intermediate Tax Free Funds, Inc., Voyageur Insured Funds, Inc., Voyageur Funds, Inc., Voyageur Mutual Funds, Inc., Voyageur Mutual Funds II, Inc., Voyageur Mutual Funds III, Inc., Voyageur Mutual Funds IV, Inc., and Voyageur Investment Trust, on behalf of themselves and future investment companies for which the Adviser (as defined below), or any person controlled by or under common control with the Adviser, may serve as investment adviser, or for which the Distributor (as defined below), or any person controlled by or under common control with the Distributor, may serve as distributor, and which offer shares on a basis which is identical in all material respects to the arrangements described in the application (the "Funds"); Voyageur Fund Managers, Inc. (the "Adviser"); and Voyageur Fund Distributors, Inc. (the "Distributor").

RELEVANT ACT SECTIONS: Order requested pursuant to section 6(c) for exemptions from sections 2(a)(32), 2(a)(35), 18(f)(1), 18(g), 18(i), 22(c), and 22(d) of the Act and rule 22c–1 thereunder.

SUMMARY OF APPLICATION: Applicants seek an order to permit the Funds to issue and sell multiple classes of shares representing interests in the same portfolios of securities, assess a contingent deferred sales charge ("CDSC") on certain redemptions, and waive the CDSC in certain instances.

FILING DATE: The application was filed on October 22, 1993 and amended on December 3, 1993. Counsel, on behalf of applicants, has agreed to file a further amendment during the notice period to make certain technical changes. This notice reflects the changes to be made to the application by such further amendment.

HEARING OR NOTIFICATION OF HEARING: An order granting the application will be issued unless the SEC orders a hearing. Interested persons may request a hearing by writing to the SEC's Secretary and serving applicants with a copy of the request, personally or by mail. Hearing requests should be received by the SEC by 5:30 p.m. on January 4, 1994, and should be accompanied by proof of service on applicants, in the form of an affidavit or, for lawyers, a certificate of service. Hearing requests should state the nature of the writer's interest, the reason for the request, and the issues contested. Persons who wish to be notified of the date of a hearing may request notification by writing to the SEC's Secretary.

ADDRESSES: Secretary, SEC, 450 Fifth Street NW., Washington, DC 20549. Applicants, 90 South Seventh Street, Suite 4400, Minneapolis, Minnesota 55402.

FOR FURTHER INFORMATION CONTACT: James E. Anderson, Staff Attorney, at (202) 272–7027, or C. David Messman, Branch Chief, at (202) 272–3018 (Division of Investment Management, Office of Investment Company Regulation).

SUPPLEMENTARY INFORMATION: The following is a summary of the application. The complete application is available for a fee from the SEC's Public Reference Branch.

Applicants' Representations

1. The Funds are open-end diversified management investment companies. Each Fund, other than Voyageur Investment Trust, is organized as a Minnesota corporation. Voyageur Investment Trust is organized as a Massachusetts business trust. Each Fund is organized as a series fund and is authorized to issue its shares in more than one series representing a separate portfolio of assets and liabilities. The Adviser serves as the investment adviser of each Fund. The Distributor serves as the principal underwriter of the shares of each fund.

2. the Funds, other than Series A of Voyageur Mutual Funds IV, Inc., currently offer one class of shares at net asset value plus a traditional front-end sales charge in connection with investments of up to $1 million.[1] Investments of $1 million are not subject to a front-end sales charge, but a CDSC is deducted in certain cases upon redemption of the Funds' shares.[2] Applicants request an order pursuant to section 6(c) for exemptions from sections 2(a)(32), 2(a)(35), 18(f)(1), 18(g), 18(i), 22(c), and 22(d) of the Act and rule 22c–1 thereunder to permit the Funds to issue and sell multiple classes of shares, assess a CDSC on certain redemptions, and waive the CDSC in certain instances.

3. Under applicants' proposal, the Funds could offer shares either: (a) Subject to a conventional front-end sales load (with respect to investments of less than $1 million) or subject to a CDSC (with respect to investments of $1 million or more) and a rule 12b–1

[1] Currently, the only series of Voyageur Mutual Funds IV, Inc. is Voyageur Money Market Fund, the shares of which are offered at net asset value without the imposition of any front-end sales charge or CDSC.

[2] Applicants impose a CDSC pursuant to an exemptive order of the SEC. Voyageur Tax Free Funds, Inc., et al., Investment Company Act Release Nos. 19062 (Oct. 28, 1992) (notice) and 19125 (Nov. 24, 1992) (order). The CDSC order will be superceded by the order requested hereby as to each Fund that implements a multi-class structure.

service fee at an annual rate of up to .25% of the average daily net assets ("Class A shares");[3] (b) subject to a CDSC (which applicants expect will range from 4% on redemptions made during the first two years following purchase to 1% on redemptions made during the sixth year since purchase), a rule 12b–1 service fee at annual rate of up to .25%, and a rule 12b–1 distribution fee at an annual rate of up to .75%, of average daily net assets ("Class B shares"); (c) subject to a CDSC (which applicants expect will be 1% on redemptions made during the first two years following purchases), a rule 12b–1 service fee at an annual rate of up to .25%, and a rule 12b–1 distribution fee at an annual rate of up to .75%, of average daily net assets ("Class C shares"); (d) subject to a front-end sales load (which applicants expect will be 2% or less of the amount invested), a rule 12b–1 service fee at annual rate of up to .25%, and a rule 12b–1 distribution fee at an annual rate of up to .75%, of average daily net assets ("Class D shares"); (e) without a front-end sales load or CDSC, but subject to a rule 12b–1 service fee at annual rate of up to .25% of average daily net assets, for purchase exclusively by investors meeting such minimum investment and/or other eligibility requirements established by applicants ("Class Y shares"); and (f) without any sales or service charges for purchase exclusively by the Adviser, the Distributor, certain agents and affiliates of the Adviser and Distributor, and officers, directors, and employees of such entities ("Class Z shares").[4] Applicants also seek authority for Voyageur Money Market Fund (a series of Voyageur Mutual Funds IV, Inc.) to offer its shares in two or more classes without a front-end sales charge or CDSC and with variations among classes only in 12b–1 service fees and or distribution fees (if any) and certain other class-specific expenses, as discussed below. The Funds also may establish one or more additional classes to be sold with different sales load and service and distribution fee structures, as described below.

4. The CDSC for all classes of shares will be imposed on the lesser of the aggregate net asset value of the shares being redeemed either at the time of purchase or redemption. No CDSC will be imposed on shares acquired through reinvestment of income dividends or capital gains distributions. Upon any request for redemption of Class A, Class B, or Class C shares, it will be assumed that shares subject to no CDSC will redeemed first in the order purchased (however, if a shareholder owns Class A, Class B, and Class C shares, then, absent a shareholder choice to the contrary, Class C shares not subject to a CDSC will be redeemed in full prior to any redemption of Class A or Class B shares not subject to a CDSC, and thereafter Class B shares not subject to a CDSC will be redeemed in full prior to any redemption of Class A shares not subject to a CDSC). It is expected that the CDSC schedule of the Funds will vary depending in part on the front-end sales load (if any) applicable to the shares and the compensation paid to a dealer for selling shares of the Fund. Any variation in the CDSC schedules will be set forth in the applicable prospectus.

5. Applicants request the ability to waive or reduce the CDSC in the following instances: (a) Involuntary redemptions effected pursuant to a Fund's right to liquidate shareholder accounts having an aggregate net asset value of less than the minimum account balance set forth in the Fund's then-current prospectus; (b) the death or disability of a Fund shareholder within the meaning of section 72(m)(7) of the Internal Revenue Code, as amended; and (c) in connection with purchases of Class A shares funded by the proceeds from the redemption of shares of any unrelated investment company that charges a front-end sales load, provided that there was no deferred sales load, fee, or other charge imposed in connection with such redemption. In order to obtain the waiver in category (c), the purchase of Class A shares must be made within 60 days following the redemption. The Distributor also must take such steps as may be necessary to determine that the purchaser has not paid a deferred sales load, fee, or other charge in connection with such redemption, including, without limitation, requiring the purchaser to provide a written representation that no deferred sales load, fee, or other charge was imposed in connection with such redemption and, in addition, either requiring the purchaser to provide an activity statement that supports the purchaser's representation or reviewing a copy of the current prospectus of the unrelated investment company and determining that such company does not impose a deferred sales load, fee, or other charge in connection with the redemption of shares.

6. Applicants intend to provide a one time credit for any CDSC paid upon redemption, the proceeds of which are reinvested in the same class of shares of a Fund within 90 days of redemption. The Distributor will provide this credit from its own assets.

7. Class B shares of a Fund held for a specified number of years will automatically convert to Class A shares of such Fund at the relative net asset values of each of the classes. For purposes of calculating the holding period, Class B shares will be deemed to have been issued on the sooner of: (a) The date on which the issuance of Class B shares occurred; or (b) for Class B shares obtained through an exchange, or a series of exchanges, the date on which the issuance of the original Class B shares occurred.

8. A given class of shares will be exchangeable only for shares of the corresponding class of other Funds. The exchange privilege will be subject to the eligibility criteria applicable to the class of shares of the Fund into which the shareholder wishes to exchange. Applicants will only permit exchanges into shares of money market funds having rule 12b–1 plans, if, either the time period during which the shares of the money market funds are held is included with the time period during which the exchanged shares were held in the calculation of the CDSC, or such time period is not included but the amount of the CDSC is reduced by the amount of any rule 12b–1 payments made by the money market funds with respect to those shares. Applicants will comply with rule 11a–3 as to all exchanges.

9. Class A, Class B, Class C, Class D, Class Y, Class Z and additional classes of shares created in the future will each represent interests in the same portfolio of investments, and will be identical in all respects except: (a) Each class of shares would have a different designation; (b) each class of shares might be sold under different sales arrangements (*e.g.*, subject to a front-end sales load, subject to a CDSC, subject to a combination of a front-end sales load and a CDSC, or at net asset value); (c) each class may bear any rule 12b–1 plan payments related to that class (and any other costs related to obtaining shareholder approval of the rule 12b–1 plan for that class or an amendment to its rule 12b–1 plan); (d) each class of shares may bear expenses determined by the board of directors to be allocated to that class ("Class Expenses"), as

[3] Existing shares of the Funds would be designated Class A shares upon implementation of the multiple distribution proposal.

[4] Applicants intend that upon the initial public offering of Class Y and/or Class Z shares of a Fund, shareholders of any existing classes of such Fund who would qualify for investment in Class Y or Class Z shares, as applicable, would have such existing classes automatically convert into Class Y or Class Z shares, as applicable, on the basis of the relative net asset values of such classes of shares at the time of conversion.

described in the following paragraph; (e) only shareholders of the affected classes would be entitled to vote on matters pertaining to the rule 12b–1 plan relating to their respective class of shares in accordance with the procedures set forth in rule 12b–1; (f) each class of shares would have different exchange privileges; and (g) classes that impose a rule 12b–1 fee may convert into another class.

10. Class Expenses may include the following: (a) Transfer agency fees as identified by the transfer agent as being attributable to a specific class; (b) printing and postage expenses related to preparing and distributing materials such as shareholder reports, prospectuses and proxies to current shareholders; (c) Blue Sky registration fees incurred by a class of shares; (d) SEC registration fees incurred by a class of shares; (e) the expenses of administrative personnel and services as required to support the shareholders of a specific class; (f) litigation or other legal expenses relating solely to one class of shares; (g) directors' or trustees' fees incurred as a result of issues relating to one class of shares; and (h) other expenses that are subsequently identified and determined to be properly allocated to one class of shares which shall be approved by the SEC pursuant to an amended order.

Applicants' Legal Analysis

1. Applicants request an order exempting them from the provisions of sections 18(f)(1), 18(g), and 18(i) of the Act to the extent that the proposed issuance and sale of various classes of shares representing interests in the same Fund might be deemed: (a) To result in a "senior security" within the meaning of section 18(g); (b) prohibited by section 18(f)(1); and (c) to violate the equal voting provisions of section 18(i).

2. Applicants believe that the proposed multi-class arrangement will better enable the Funds to meet the competitive demands of today's financial services industry. Under the multi-class arrangement, an investor will be able to choose the method of purchasing shares that is most beneficial given the amount of his or her purchase, the length of time the investor expects to hold his or her shares, and other relevant circumstances. The proposed arrangement would permit the Funds to facilitate both the distribution of their securities and provide investors with a broader choice as to the method of purchasing shares without assuming excessive accounting and bookkeeping costs or unnecessary investment risks.

3. The proposed allocation of expenses and voting rights relating to the rule 12b–1 plans in the manner described is equitable and would not discriminate against any group of shareholders. In addition, such arrangements should not give rise to any conflicts of interest because the rights and privileges of each class of shares are substantially identical.

4. Applicants believe that the proposed multi-class arrangement does not present the concerns that section 18 of the Act was designed to address. The multi-class arrangement will not increase the speculative character of the shares of the Fund. The multi-class arrangement does not involve borrowing, nor will it affect the Funds' existing assets or reserves, and does not involve a complex capital structure. Nothing in the multi-class arrangement suggests that it will facilitate control by holders of any class of shares.

5. Applicants submit that the requested exemption to permit the Funds to implement the proposed CDSCs is appropriate in the public interest, consistent with the protection of investors, and consistent with the purposes fairly intended by the policy and provisions of the Act. The proposed CDSC arrangements will provide shareholders the option of having their full payment invested for them at the time of their purchase of shares of the Funds with no deduction of an initial sales charge.

Applicants' Conditions

Applicants agree that any order granting the requested relief shall be subject to the following conditions:

1. Each class of shares will represent interests in the same portfolio of investments of a Fund and be identical in all respects, except as set forth below. The only differences among various classes of shares of the same Fund will relate solely to: (a) The designation of each class of shares of the Fund; (b) the impact of the respective sales charge, if any, for each class of shares (*e.g.*, Class A shares would be subject to a front-end sales load or CDSC depending on the amount of investment), Class B and Class C shares would be subject to a CDSC, Class D would be subject to a front-end sales load, and Class Y and Class Z would not be subject to a front-end sales load or CDSC); (c) expenses assessed to a class as a result of a rule 12b–1 plan providing for a service and/or distribution fee (*e.g.*, Class A and Class Y shares would pay a service fee, Class B, Class C, and Class D shares would pay a service fee and a distribution fee, and Class Z shares would not pay a service fee or a distribution fee); (d) Class Expenses, which will be limited to: (i) Transfer agency fees as identified by the transfer agent as being attributable to a specific class; (ii) printing and postage expenses related to preparing and distributing materials such as shareholder reports, prospectuses and proxies to current shareholders; (iii) Blue Sky registration fees incurred by a class of shares; (iv) SEC registration fees incurred by a class of shares; (v) the expenses of administrative personnel and services as required to support the shareholders of a specific class; (vi) litigation or other legal expenses relating solely to one class of shares; and (vii) directors' fees incurred as a result of issues relating to one class of shares; (e) voting rights on matters exclusively affecting one class of shares (*e.g.*, the adoption, amendment, or termination of the rule 12b–1 plan) in accordance with the procedures set forth in rule 12b–1; (f) the different exchange privileges of the various classes of shares as described in the prospectuses (and as more fully described in the statements of additional information) of the Funds; and (g) classes that impose a 12b–1 fee may convert to another class. Any additional incremental expenses not specifically identified above that are subsequently identified and determined to be properly allocated to one class of shares shall not be so allocated until approved by the SEC pursuant to an amended order.

2. The directors of each of the Funds, including a majority of the independent directors, shall have approved the multi-class arrangement, prior to the implementation thereof by a particular Fund. The minutes of the meetings of directors of each of the Funds regarding the deliberations of the directors with respect to the approvals necessary to implement the multi-class arrangement will reflect in detail the reasons for determining that the proposed system is in the best interest of the Fund and its shareholders.

3. The initial determination of the Class Expenses, if any, that will be allocated to a particular class of a Fund and any subsequent changes thereto will be reviewed and approved by a vote of the directors of the affected Fund, including a majority of the independent directors. Any person authorized to direct the allocation and disposition of monies paid or payable by a Fund to meet class-specific expenses shall provide to the directors, and the directors shall review, at least quarterly, a written report of the amounts so expended and the purpose for which the expenditures were made.

4. On an ongoing basis, the directors of the Funds, pursuant to their fiduciary responsibilities under the Act and

otherwise, will monitor each Fund for the existence of any material conflicts among the interests of the various classes of shares. The directors, including a majority of the independent directors, shall take such action as is reasonably necessary to eliminate any such conflicts that may develop. The Adviser and the Distributor will be responsible for reporting any potential or existing conflicts to the directors. If a conflict arises, the Adviser and the Distributor at their own cost will remedy such conflict up to and including establishing a new registered management investment company.

5. The directors of the Funds will receive quarterly and annual statements concerning distribution and shareholder servicing expenditures complying with paragraph (b)(3)(ii) of rule 12b–1, as it may be amended from time to time. In the statements, only expenditures properly attributable to the sale or servicing of a particular class of shares will be used to justify any distribution or servicing fee charged to that class. Expenditures not related to the sale or servicing of a particular class will not be presented to the directors to justify any fee attributable to that class. The statements, including the allocations upon which they are based, will be subject to the review and approval of the independent directors in the exercise of their fiduciary duties.

6. Dividends paid by a Fund with respect to each class of shares, to the extent any dividends are paid, will be calculated in the same manner, at the same time, on the same day, and will be in the same amount, except that fee payments made under the rule 12b–1 plan relating to a particular class will be by each such class and except that any Class Expenses will be borne by the applicable class of shares.

7. The methodology and procedures for calculating the net asset value and dividends/distributions of the various classes and the proper allocation of income and expenses among the classes has been reviewed by an expert (the "Expert"). The Expert has rendered a report, which has been provided to the staff of the SEC, stating that such methodology and procedures are adequate to ensure that such calculations and allocations will be made in an appropriate manner. On an ongoing basis, the Expert, or an appropriate substitute Expert, will monitor the manner in which the calculations and allocations are being made and based upon such review, will render at least annually a report to the Fund that the calculations and allocations are being made properly. The reports of the Expert shall be filed as part of the periodic reports filed with the SEC pursuant to sections 30(a) and 30(b)(1) of the Act. The work papers of the Experts with respect to such reports, following request by the Funds which the Funds agree to make, will be available for inspection by the SEC staff upon the written request for such work papers by a senior member of the SEC's Division of Investment Management or of a Regional Office of the SEC, limited to the Director, an Associate Director, the Chief Accountant, the Chief Financial Analyst, an Assistant Director, and any Regional Administrators or Associate and Assistant Administrators. The initial report of the Expert is a "report on policies and procedures placed in operation" and the ongoing reports will be "reports on policies and procedures placed in operation and tests of operating effectiveness" as defined and described in SAS No. 70 of the AICPA, as it may be amended from time to time, or in similar auditing standards as may be adopted by the AICPA from time to time.

8. Applicants have adequate facilities in place to ensure implementation of the methodology and procedures for calculating the net asset value and dividends/distributions among the various classes of shares and the proper allocation of income and expenses among such classes of shares and this representation has been concurred with by the Expert in its initial report referred to in condition 7 above and will be concurred with by the Expert, or appropriate substitute Expert, on an ongoing basis at least annually in the ongoing reports referred to in condition 7 above. The applicants agree to take immediate corrective action if the Expert, or appropriate substitute Expert, does not so concur in the ongoing reports.

9. The prospectuses of the Funds will include a statement to the effect that a salesperson and any other person entitled to receive compensation for selling or servicing Fund shares may receive different levels of compensation for selling one particular class of shares over another in a Fund.

10. The Distributor will adopt compliance standards as to when shares of a particular class may appropriately be sold to particular investors. Applicants will require all persons selling shares of the Funds to agree to conform to these standards.

11. The conditions pursuant to which the exemptive order is granted and the duties and responsibilities of the directors of the Funds with respect to the multi-class arrangement will be set forth in guidelines which will be furnished to the directors.

12. Each Fund prospectus (regardless of whether all classes of shares of such Fund are offered through such prospectus) will disclose the respective expenses, performance data, distribution arrangements, services, fees, sales loads, deferred sales loads, exchange privileges, and conversion features applicable to each class of shares. The shareholder reports will contain, in the statement of assets and liabilities and statement of operations, information related to the Fund as a whole generally and not on a per class basis. Each Fund's per share data, however, will be prepared on a per class basis with respect to all classes of shares of such Fund. To the extent any advertisement or sales literature describes the expenses or performance data applicable to any class of shares, it will disclose the expenses and/or performance data applicable to all classes. The information provided by applicants for publication in any newspaper or similar listing of the Funds' net asset values and public offering prices will separately present each class of shares.

13. Applicants acknowledge that the grant of the exemptive order requested by this application will not imply SEC approval, authorization, or acquiescence in any particular level of payments that the Funds may make pursuant to rule 12b–1 distribution plans or shareholder services plans in reliance on the exemptive order.

14. Any class of shares with a conversion feature ("Purchase Class") will convert into another class ("Target Class") of shares on the basis of the relative net asset values of the two classes, without the imposition of any sales load, fee, or other charge. After conversion, the converted shares will be subject to an asset-based sales charge and/or service fee (as those terms are defined in Article III, section 26 of the NASD's Rules of Fair Practice), if any, that in the aggregate are lower than the asset-based sales charge and service fee to which they were subject prior to the conversion.

15. If a Fund implements any amendment to its rule 12b–1 plan (or, if presented to shareholders, adopts or implements any amendment of a non-rule 12b–1 shareholder services plan) that would increase materially the amount that may be borne by the Target Class shares under the plan, existing Purchase Class shares will stop converting into Target Class shares unless the Purchase Class shareholders, voting separately as a class, approve the proposal. The directors shall take such action as is necessary to ensure that existing Purchase Class shares are

exchanged or converted into a new class of shares ("New Target Class"), identical in all material respects to the Target Class as it existed prior to implementation of the proposal, no later than such shares previously were scheduled to convert into Target Class shares. If deemed advisable by the directors to implement the foregoing, such action may include the exchange of all existing Purchase Class shares for a new class ("New Purchase Class"), identical to existing Purchase Class shares in all material respects except that New Purchase Class shares will convert into New Target Class shares. New Target Class or New Purchase Class may be formed without further exemptive relief. Exchanges or conversions described in this condition shall be effected in any manner that the Directors reasonably believe will not be subject to federal taxation. In accordance with condition 4, any additional cost associated with the creation, exchange, or conversion of New Target Class or New Purchase Class shall be borne solely by the Adviser and the Distributor. Purchase Class shares sold after the implementation of the proposal may convert into Target Class shares subject to the higher maximum payment, provided that the material features of the Target Class plan and the relationship of such plan to the Purchase Class shares are disclosed in an effective registration statement.

16. Applicants will comply with the provisions of proposed Rule 6c–10 under the Act, Investment Company Act Release No. 16169 (Nov. 2, 1988), as currently proposed and as it may be reproposed, adopted, or amended.

For the SEC, by the Division of Investment Management, under delegated authority.

Margaret H. McFarland,

Deputy Secretary.

[FR Doc. 93–30696 Filed 12–15–93; 8:45 am]

BILLING CODE 8010–01–M

DEPARTMENT OF TRANSPORTATION

Coast Guard

[CGD 93–084]

Commercial Fishing Industry Vessel Advisory Committee; Meeting

AGENCY: Coast Guard, DOT.

ACTION: Notice of meeting.

SUMMARY: The Commercial Fishing Industry Vessel Advisory Committee (CFIVAC) will meet to discuss various issues. Agenda items include training, licensing, and casualty reporting requirements. The meeting will be open to the public.

DATES: The meeting will be held January 26 and 27, 1994, from 8:30 a.m. to 5 p.m. daily. Written material should be submitted not later than January 14, 1994.

ADDRESSES: The meeting will be held at the Long Beach Renaissance Hotel, 111 East Ocean Boulevard, Long Beach, CA 90802. Written material should be submitted to LCDR Mark Bobal, Executive Director, Commandant (G–MVI–4), U.S. Coast Guard, 2100 Second Street SW., Washington, DC 20593.

FOR FURTHER INFORMATION CONTACT: LCDR Mark Bobal, Executive Director, Commandant (G–MVI–4), U.S. Coast Guard, 2100 Second Street SW., Washington, DC 20593, telephone (202) 267–2307.

SUPPLEMENTARY INFORMATION: Notice of this meeting is given pursuant to the Federal Advisory Committee Act, 5 U.S.C. App. 2 section 1 et seq. The agenda will include discussion of the following topics:

(1) Coast Guard plans for licensing of Commercial Fishing Industry Vessel operators;
(2) Training required under 46 CFR 28.270 (Instruction, drills, and safety orientation);
(3) Briefing on the National Pollution Funds Center;
(4) Impact of the Memorandum of Understanding (MOU) between the Coast Guard and the Occupational Safety and Health Administration (OSHA);
(5) Review of Requirements for Commercial Fishing Industry Vessels in 46 part 28;
(6) Review of Navigations and Vessel Inspection Circular (NVIC) 5–86, Voluntary Standards for U.S. Uninspected Commercial Fishing Vessels;
(7) Issuance of Merchant Mariner Documents (MMD) to Fishing Industry Vessel personnel; and
(8) Fishing Industry Vessel casualty reporting requirements.

With advance notice, and at the discretion of the Chairman, members of the public may present oral statements at the meeting. Persons wishing to present oral statements should notify the CFIVAC Executive Director no later than the day before the meeting. Written statements or material may be submitted for presentation to the Committee at any time; however, to ensure distribution to each Committee member, 20 copies of the written material should be submitted to the Executive Director no later than January 14, 1994.

FOR FURTHER INFORMATION CONTACT: LCDR Mark D. Bobal, Merchant Vessel Inspection and Documentation Division, Fishing Vessel/Offshore Activities Branch (G–MVI–4), room 1405, U.S. Coast Guard Headquarters, 2100 Second Street, SW., Washington, DC 20593–0001, (202) 267–2307.

Dated: December 8, 1993.

R.C. North,

Captain, U.S. Coast Guard, Acting Chief, Office of Marine Safety, Security and Environmental Protection.

[FR Doc. 93–30714 Filed 12–15–93; 8:45 am]

BILLING CODE 4910–14–M

Federal Highway Administration

Environmental Impact Statement: Los Angeles County, CA

AGENCY: Federal Highway Administration (FHWA), DOT.

ACTION: Notice of intent.

SUMMARY: The FHWA and FRA are issuing this notice to advise the public that an Environmental Impact Statement (EIS) will be prepared for a proposed highway improvement and railroad consolidation project in Los Angeles County, California, such project being known as the Alameda Corridor. This is a reissuance of a similar notice which was published in the **Federal Register** (Vol. 56, No. 4: Monday, January 7, 1991) and is now being reissued for reasons stated in the supplementary information described below. The Alameda Corridor project has completed environmental documentation requirements under the California Environmental Quality Act (CEQA) effective January 22, 1993, and therefore this notice reflects the intended preparation of an environmental document pursuant to the National Environmental Policy Act (NEPA) only.

FOR FURTHER INFORMATION CONTACT: Mary Gray, Transportation Engineer, Federal Highway Administration, 980 9th Street—suite 400, Sacramento, California 95814–2724, Telephone (916) 551–1310.

SUPPLEMENTARY INFORMATION: The FHWA and FRA, in cooperation with the California Department of Transportation (Caltrans) and the Alameda Corridor Transportation Authority (ACTA), will prepare an Environmental Impact Statement (EIS) on a proposed multi-modal transportation project located along the approximately 18-mile long Alameda Corridor in Los Angeles County, California. The fundamental purpose of the project is to provide the improvements necessary to consolidate freight rail service along the Alameda Corridor, so that efficiency of goods

movement will be enhanced and delays to automotive traffic will be reduced.

The Alameda Corridor project has been developing over the past 12 years, beginning with the creation in 1981 of the Ports Advisory Committee by the Southern California Association of Governments (SCAG). Various planning activities undertaken by that committee eventually led to the formation of the Alameda Corridor Task Force in 1985, which in turn led to the creation of a joint powers organization called the Alameda Corridor Transportation Authority (ACTA) in 1989. The ACTA initiated a conceptual engineering effort in 1990, in order to more fully define the project. It was at that time that the first Notice of Intent was issued.

Subsequent to the initiation of the conceptual engineering effort, it was decided that Federal funding sources which had been identified for application to the project consisted of amounts earmarked for specific grade separation projects along the corridor. These projects could be documented under Categorical Exclusions, rather than an EIS. The ACTA withdrew from the Federal environmental process at this point, and the project moved forward under CEQA.

A range of conceptual engineering alternatives were developed for evaluation that included an at-grade consolidated trainway and a depressed trainway, each of which was coupled with several different levels of associated roadway improvements. The project location was defined as Alameda Street, extending from downtown Los Angeles to the Ports of Los Angeles and Long Beach. An alignment variation was considered in the northern portion of the corridor that would have routed the project outside the city of Vernon. Two alternative project locations were considered, one running along the Los Angeles River and a second which would have used another freight rail line to the east of Alameda in the general vicinity of the Los Angeles River.

As a result of the CEQA evaluation process, which used a range of engineering and environmental factors, the alternative project locations were dropped from further consideration. Three project alignments within the Alameda Corridor were developed further and subjected to detailed environmental evaluation. A Draft Environmental Impact Report (DEIR) was issued for public comment in August of 1992, pursuant to CEQA. The public comment process included six formal public hearing sessions which were attended by a total of 163 persons. Testimony was taken from 47 individuals and 35 letters of comment were received from a variety of agencies and individuals.

A Final Environmental Impact Report (FEIR) was prepared and considered by the ACTA, and in January of 1993, the ACTA certified the FEIR as complete, adopted a locally preferred alternative for implementation, and also adopted Findings & Statement of Overriding Considerations and a Mitigation Monitoring Program, all actions required by CEQA. The locally preferred alternative would construct a depressed trainway along Alameda Street, from northern rail connections in downtown Los Angeles southerly to State Route 91. It would reconstruct adjacent roadways on the east and west sides of Alameda Street to their present configuration, with improvements to signalization and other transportation systems management (TSM) types of improvement. From State Route 91 southerly to the Ports of Los Angeles and Long Beach, an at-grade trainway would be constructed, and Alameda Street would be widened to six lanes. The locally preferred alternative was considered the environmentally superior alternative. The CEQA Notice of Determination was posted on January 22, 1993.

In order to apply for additional Federal funds, it was decided by ACTA in consultation with Caltrans and FHWA that a Federal environmental document should be prepared. The Federal Highway Administration and the Federal Railroad Administration will serve as joint lead agencies under NEPA. The Federal environmental document will be an EIS and it will examine the alternatives previously examined in the DEIR and FEIR, recognizing that a locally preferred alternative has been selected for implementation. The FEIR will be used to the maximum extent practicable in preparing the EIS.

Letters describing the proposed action and soliciting comments will be sent to appropriate Federal, State and local agencies, and to other parties who are known to have an interest in the project. A formal scoping meeting will be held on Tuesday, January 18, 1994, at Bateman Hall in the City of Lynwood.

Comments or questions concerning this proposed action should be addressed to the FHWA at the address shown above.

Dated: December 10, 1993.

Mary Gray,

Transportation Engineer, Sacramento, California.

[FR Doc. 93-30721 Filed 12-15-93; 8:45 am]

BILLING CODE 4910-22-M

Environmental Impact Statement: Orange and San Diego Counties, CA

AGENCY: Federal Highway Administration (FHWA), DOT.

ACTION: Revised notice of intent.

SUMMARY: The FHWA is issuing this revised Notice to advise the public that an Environmental Impact Statement will be prepared for a proposed highway project in southern Orange County and northern San Diego County, California.

FOR FURTHER INFORMATION CONTACT: Mary Gray, Transportation Engineer, Federal Highway Administration, 980 9th Street—Suite 400, Sacramento, California 95814-2724, Telephone (916) 551-1310.

SUPPLEMENTARY INFORMATION: The FHWA, in cooperation with the California Department of Transportation and the Foothill/Eastern Transportation Corridor Agency (F/ETCA), will prepare an Environmental Impact Statement (EIS) on a proposal to locate and construct a limited access transportation facility with six lanes and a median of sufficient width for high-occupancy vehicles (HOV) or other transit considerations. Transportation improvements are needed to serve existing and planned development.

This facility, described as Route 241, will be an extension of Foothill Transportation Corridor (FTC) North. The first segment of the FTC is currently in operation between Portola Parkway North and Portola Parkway South. Another segment is under construction between Portola Parkway North and Antonio Parkway. The proposed project will begin at Oso Parkway and extend in a southerly direction to join the San Diego Freeway, I-5, near the Orange County/San Diego County line.

The highway is proposed as a toll facility and will include toll collection facilities on the mainline and on some entry/exit ramps. The toll facilities will be removed when revenue bonds issued for the project have been repaid. Alternatives being considered for the project include, but are not limited to: (1) New Highway Alternative. This involves locating and constructing six general traffic lanes with sufficient median width for high-occupancy vehicle (HOV) lanes/bus lanes or transit. An interchange with I-5 will be included in this alternative. (2) No Project. This alternative is essentially the "no build" option. Note: As required by the National Environmental Policy Act (NEPA), all other reasonable alternatives will be considered.

In November of 1985, Orange County began consultation with State and local agencies for the southern segment of the

FTC identified as beginning just south of the future Oso Parkway interchange and extending southerly to a connection with the San Diego Freeway (I–5). These consultations identified areas of special concern along the proposed route which were the focus of locally initiated environmental studies. FHWA believes that this early consultation has been extensive and consistent with 40 CFR 1501.7. However, in order to inform potentially affected agencies and the general public of FHWA involvement, one agency scoping meeting for local, state and federal agencies and two public scoping meetings will be held. The agency scoping meeting will be held on February 2, 1994 at 10 a.m. at Michael Brandman Associates, 2530 Redhill Avenue, Santa Ana, California 92705. Once dates and locations are established for the public scoping meetings, appropriate public notification will be given. Comments and suggestions are invited from all interested parties to ensure that the full range of issues related to this proposed route are addressed, and all significant issues identified. Question and comments concerning this proposed action and the EIS should be directed to the FHWA at the address provided previously in this document.

(Catalog of Federal Assistance Program Number 20.205, Highway Research, Planning, and Construction. The regulations implementing Executive Order 12372 regarding intergovernmental consultation of Federal Programs and activities apply to this program.)

Issued on December 10, 1993.

Mary E. Gray,

Transportation Engineer, Sacramento, California.

[FR Doc. 93–30722 Filed 12–15–93; 8:45 am]

BILLING CODE 4910–22–M

Intelligent Vehicle-Highway Society of America; Public Meeting

AGENCY: Federal Highway Administration (FHWA), DOT.

ACTION: Notice of public meeting.

SUMMARY: The Intelligent Vehicle-Highway Society of America (IVHS AMERICA) will hold a meeting of its Coordinating Council on January 14 and 15, 1994. The session is expected to focus on: (1) Technical Committee Annual Reports; (2) Education, Information, and Outreach Update; (3) System Architecture Program Update; (4) IVHS Standards Update; (5) National Program Plan Update; (6) Report of the Membership Committee; (7) Report of the Awards Committee; and (8) Update on the Annual Meeting.

IVHS AMERICA provides a forum for national discussion and recommendations on IVHS activities including programs, research needs, strategic planning, standards, international liaison, and priorities. The charter for the utilization of IVHS AMERICA establishes this organization as an advisory committee under the Federal Advisory Committee Act (FACA), 5 USC app. 2, when it provides advice or recommendations to DOT officials on IVHS policies and programs. (56 FR 9400, March 6, 1991).

DATES: The Coordinating Council of IVHS AMERICA will meet on January 14, 1994, from 8:30 a.m. to 5 p.m. e.t., and on January 15, 1994, from 8:30 a.m. to 12 p.m. e.t.

ADDRESSES: Washington Sheraton, 2660 Woodley Road, NW., Washington, DC 20008, (202) 328–2000.

FOR FURTHER INFORMATION CONTACT: Ms. Susan Lauffer, FHWA, HTV–1, Washington, D.C. 20590, (202) 366–0372, office hours are from 7:45 a.m. to 4:15 p.m., e.t., Monday through Friday, except for legal Federal holidays; or Mr. Daniel Toohey, IVHS AMERICA, 400 Virginia Avenue, SW., suite 800, Washington, D.C. 20024, (202) 484–4847.

(23 U.S.C. 315; 49 CFR 1.48)

Issued on: December 7, 1993.

Rodney E. Slater,

Federal Highway Administrator.

[FR Doc. 93–30605 Filed 12–15–93; 8:45 am]

BILLING CODE 4910–22–P

Research and Special Programs Administration

Office of Hazardous Materials Safety; Applications for Modification of Exemptions or Applications To Become a Party to an Exemption

AGENCY: Research and Special Programs Administration, DOT.

ACTION: List of applications for modification of exemptions or applications to become a party to an exemption.

SUMMARY: In accordance with the procedures governing the application for, and the processing of, exemptions from the Department of Transportation's Hazardous Materials Regulations (49 CFR part 107, subpart B), notice is hereby given that the Office of Hazardous Materials Safety has received the applications described herein. This notice is abbreviated to expedite docketing and public notice. Because the sections affected, modes of transportation, and the nature of application have been shown in earlier Federal Register publications, they are not repeated here. Requests for modifications of exemptions (e.g., to provide for additional hazardous materials, packaging design changes, additional mode of transportation, etc.) are described in footnotes to the application number. Application numbers with the suffix "X" denote a modification request. Application numbers with the suffix "P" denote a party to request. These applications have been separated from the new applications for exemption to facilitate processing.

DATES: Comments must be received on or before January 3, 1994.

ADDRESS COMMENTS TO: Dockets Unit, Research and Special Programs Administration, U.S. Department of Transportation, Washington, DC 20590.

Comments should refer to the application number and be submitted in triplicate. If confirmation of receipt of comments is desired, include a self-addressed stamped postcard showing the exemption number.

FOR FURTHER INFORMATION: Copies of the applications are available for inspection in the Dockets Unit, room 8426, Nassif Building, 400 7th Street SW., Washington, DC.

Application No.	Applicant	Modification of exemption
8009–X	FIBA Compressed Gas Equipment, Westboro, MA (See Footnote 1)	8009
8215–X	Olin Corporation—Winchester Division, East Alton, IL (See Footnote 2)	8215
10130–X	UF Strainrite, Lewiston, ME (See Footnote 3)	10130
10798–X	Olin Corporation, Stamford, CT (See Footnote 4)	10798
10914–X	Allied-Signal Aerospace Company, Tempe, AZ (See Footnote 5)	10914

Application No.	Applicant	Modification of exemption
11139–X	Alaska Pacific Powder Company, Anchorage, AK (See Footnote 6)	11139

[1] To modify exemption to provide for certain specially qualified, DOT 3A and DOT 3AA tubes constructed of 4130X steel for use in transporting Division 2.1 material.
[2] To modify exemption to provide for 4C1 wooden box as an overpack for use in transporting Division 1.4 explosives.
[3] To modify exemption to provide for additional commodities of various classes of hazardous material for transport in bulk bags.
[4] To amend exemption to allow tank cars loaded with sodium hydroxide solutions, Class 8, to remain attached during unloading process.
[5] To modify exemption to provide for an alternative inspection and tests in place of the flattening test requirements of non-DOT specification cylinders comparable to DOT-3HT.
[6] To modify exemption to provide for shipment of ammonium nitrate-fuel oil mixture (containing only prilled ammonium nitrate and fuel), classed in Division 1.5D, packaged in accordance with Section 173.62.

Application No.	Applicant	Parties to exemption
3630–P	VWR Corporation, West Chester, PA	3630
5206–P	Ladshaw Explosives, Inc., New Braunfels, TX	5206
6691–P	Southern Welding Supply, Inc., Savannah, GA	6691
7616–P	Canadian National Railways, Montreal, Quebec, CN	7616
8453–P	OEI, Incorporated, Whitesburg, GA	8453
8723–P	Slurry Explosive Corporation, Columbus, KS	8723
8845–P	Titan Wireline Services, Fort Worth, TX	8845
8845–P	Magnum Wireline Services, Inc., Fort Worth, TX	8845
8877–P	Advanced Chemical Systems International, Inc., Carrollton, TX	8877
9275–P	Richard Barrie Fragrances, Inc., Orange, CT	9275
9275–P	Lancaster Group USA Cosmetics, Paterson, NJ	9275
9723–P	Environmental Enterprises, Inc., Cincinnati, OH	9723
9758–P	The Coleman Company, Inc., Wichita, KS	9758
9969–P	Mine Safety Appliances Company, Pittsburgh, PA	9969
10278–P	The Coleman Company, Inc., Wichita, KS	10278
10307–P	Tesasgulf, Inc., Aurora, NC	10307
10660–P	The Upjohn Company, Kalamazoo, MI	10660
10809–P	Spectrum Packaging Systems, Inc. (SPS), Moonachie, NJ	10809
11119–P	Oak Distributors, Inc., Ontario, CA	11119
11119–P	The C.R.C. Line, Inc., Spencer, MA	11119
11119–P	Dynatron/Bondo Corporation, Atlanta, GA	11119
11119–P	The Norac Company, Inc., Azusa, CA	11119
11189–P	Volkswagen of America, Inc., Auburn Hills, MI	11189

This notice of receipt of applications for modification of exemptions and for party to an exemption is published in accordance with part 107 of the Hazardous Materials Transportations Act (49 U.S.C. 1806; 49 CFR 1.53(e)).

Issued in Washington, DC, on December 10, 1993.

J. Suzanne Hedgepeth,

Chief, Exemption Programs, Office of Hazardous Materials Exemptions and Approvals.

[FR Doc. 93–30633 Filed 12–15–93; 8:45 am]

BILLING CODE 4910–60–M

Office of Hazardous Materials Safety; Applications for Exemptions

AGENCY: Research and Special Programs Administration, DOT.

ACTION: List of applicants for exemptions.

SUMMARY: In accordance with the procedures governing the application for, and the processing of, exemptions from the Department of Transportation's Hazardous Materials Regulations (49 CFR part 107, subpart B), notice is hereby given that the Office of Hazardous Materials Safety has received the applications described herein. Each mode of transportation for which a particular exemption is requested is indicated by a number in the "Nature of Application" portion of the table below as follows: 1—Motor vehicle, 2—Rail freight, 3—Cargo vessel, 4—Cargo aircraft only, 5—Passenger-carrying aircraft.

DATES: Comments must be received on or before January 18, 1994.

ADDRESSES COMMENTS TO: Dockets Unit, Research and Special Programs, Administration, U.S. Department of Transportation, Washington, DC 20590.

Comments should refer to the application number and be submitted in triplicate. If confirmation of receipt of comments is described, include a self-addressed stamped postcard showing the exemption application number.

FOR FURTHER INFORMATION: Copies of the applications are available for inspection in the Dockets Unit, room 8426, Nassif Building, 400 7th Street, SW., Washington, DC.

NEW EXEMPTIONS

Application No.	Applicant	Regulation(s) affected	Nature of exemption thereof
11169–N	Amalgamet Canada, Toronto, Ontario, Canada.	49 CFR 173.227 (b) & (c)	To authorize the manufacture, mark and sell of a 6PA1 composite package not to exceed 5⅝ gallon capacity, overpacked in a cushioned cylindrical stainless steel overpack, packed not to exceed 4 to a compartmented wooden outer crate, for use in transportation poisonous by inhalation material in Hazard Zone B, Division 2.3. (Modes 1, 2, 3.)
11170–N	HCI Advance Chemical Distributors, Inc., Catoosa, OK.	49 CFR 174.67 (i) & (j)	To authorize chlorine filled tank cars to remain connected during unloading process without the physical presence of an unloader. (Mode 2.)
11171–N	Dart Container Corporation, Leola, PA.	49 CFR 173.221	To authorize the reuse of flexible bulk bags, comparable to those presently authorized, in transporting polystyrene beads, expandable, Class 9. (Modes 1, 2, 3.)
11172–N	Lockheed Engineering & Sciences Company, San Diego, CA.	49 CFR 173.301(h), 173.302(a)(1), (2) & (3), 175.3.	To authorize the transportation of non-DOT specification (spherically shaped) cylinders, comparable to DOT specification 3A, to transport air, nitrogen, and oxygen in non-liquefied form as part of a submergence rescue system. (Modes 1, 4, 5.)
11174–N	Austin Powder Company, Cleveland, OH.	49 CFR 172.101	To authorize the transportation of ammonium nitrate-fuel oil mixtures, Division 1.5, in non-DOT bulk hopper-type covered aluminum trailer. (Mode 1.)
11176–N	K.A. Steel Chemicals, Inc., Lemont, IL.	49 CFR 176.67 (i) + (j)	To authorize chlorine filled tank cars to remain connected during unloading without the physical presence of an unloader. (Mode 2.)
11177–N	BHP Petroleum Americas Terminals, Inc., Honolulu, HI.	49 CFR 107.503(c)	To authorize an exemption from the R stamp requirements for cargo tank repairs. (Mode 1.)
11178–N	Great Lakes Chemical Corporation, El Dorado, AR.	49 CFR 173.226	To authorize the transportation of bromine, Class 8, in specially designed non-bulk reusable containers constructed of steel equipped with removable head with design pressure of 75 psig. (Mode 1.)
11179–N	Jones-Hamilton Co., Newark, CA	49 CFR 173.24(g), 173.29(a)	To authorize the transportation of empty, uncleaned non-DOT specification reusable plastic drums equipped with venting device, comparable to UN 1H1, containing sulfuric acid, Class 8. (Mode 1.)
11180–N	Affival, Inc., Niagara Falls, NY	49 CFR 49 CFR Parts 100 to 199.	To authorize the transportation of specially designed packaging for shipment of cored wire products containing powdered hazardous material, classed as Division 4.3 or 6.1 (Modes 1, 2, 3.)
11181–N	Don Ross d/b/a Canning Air Service, Fairbanks, AK.	49 CFR 175.320	To authorize the transportation of gasoline, Class 3, in DOT–34–15 polyethylene drums for carriage in small cargo only aircraft within the state of Alaska. (Mode 4.)
11182–N	Safety-Kleen Corp., Elgin, IL	49 CFR 173.28(b)(2)	To exempt reused 1A2 drums, from the leakproofness test requirements, used in transporting cleaning products classed as combustible liquid. (Mode 1.)
11183–N	Sioux City Foundry Co., Sioux City, IA.	49 CFR 107.503(c)	To authorize an exemption from the U stamp requirements for cargo tank construction. (Mode 1.)
11184–N	Rohm and Haas Company, Philadelphia, PA.	49 CFR 179.101–1	To authorize the transportation of flammable liquids, Class 3 in DOT–105J300 tank cars equipped with either 75 psi or 150 psi safety relief valves. (Mode 2.)
11185–N	Medical Disposal Services, Inc., Chicago, IL.	49 CFR 173.197	To authorize shipment of certain regulated medical waste contained in plastic bags overpacked in polyethylene roll-off type containers. (Mode 1.)
11186–N	Cryenco, Inc., Denver, CO	49 CFR 173.318	To authorize the manufacture, mark and sell of a cryogenic portable tank of SA–240 3161 construction, comparable to MC–338, equipped with safety relief valve with 250 psig for use in transporting hazardous materials classed in Division 2.1 and 2.2. (Modes 1, 2, 3.)
11187–N	Amalgamet Canada, Toronto, Ontario, Canada.	49 CFR 172.101 SPN41	To authorize the transportation of titanium tetrachloride, classed as Division 6.2, Hazard Zone B, PIH, in 316L stainless steel containers, comparable to 1A1 drums. (Modes 1, 2, 3.)
11188–N	Chevron Chemical Company, Richmond, CA.	49 CFR Parts 171–177	To authorize lubricating oils containing 1 percent butyl benzyl phthalate, a hazardous substance, to be shipped as non-regulated in quantities of 25,000 pounds or less. (Mode 1.)
11189–N	Morton International, Inc., Ogden, UT.	49 CFR 172.101, 173.56, 173.116.	To authorize automotive passive restraint inflators and/or modules, which are capable of passing certain UN test criteria, to be shipped as class 9. (Modes 1, 2, 3, 4.)

This notice of receipt of applications for new exemptions is published in accordance with part 107 of the Hazardous Materials Transportations Act (49 U.S.C. 1806; 49 CFR 1.53(e)).

Issued in Washington, DC, on December 9, 1993.

J. Suzanne Hedgepeth,

Chief, Exemption Programs, Office of Hazardous Materials Exemptions and Approvals.

[FR Doc. 93-30632 Filed 12-15-93; 8:45 am]

BILLING CODE 4910-60-M

DEPARTMENT OF THE TREASURY

Public Information Collection Requirements Submitted to OMB for Review

December 8, 1993.

The Department of Treasury has submitted the following public information collection requirement(s) to OMB for review and clearance under the Paperwork Reduction Act of 1980, Public Law 96-511. Copies of the submission(s) may be obtained by calling the Treasury Bureau Clearance Officer listed. Comments regarding this information collection should be addressed to the OMB reviewer listed and to the Treasury Department Clearance Officer, Department of the Treasury, Room 3171 Treasury Annex, 1500 Pennsylvania Avenue, NW., Washington, DC 20220.

SPECIAL REQUEST: The information collection, ATF Form 7, described below has been revised in response to the directives announced in the President's Memorandum For The Secretary Of The Treasury, dated August 11, 1993. In addition, revision of the ATF Form 7 is necessary at this time because of enactment into law of the Federal Firearms License Reform Act of 1993, which increased the license fees for a dealer (which now includes pawnbrokers) from $10 per year to $200 for three years. The pawnbroker license was eliminated as a separate type of license. As a result of these necessary changes and the need to implement expeditious use of this form, the Department of the Treasury, on behalf of the Bureau of Alcohol, Tobacco and Firearms, is requesting Office of Management and Budget (OMB) review and approval of the collection by December 23, 1993. To obtain a copy of ATF F 7, call -2- 202-927-8767. All comments must be received by close of business December 16, 1993.

Bureau of Alcohol, Tobacco and Firearms

OMB Number: 1512-0042

Form Numbers: ATF F 7 (5310.12)

Type of Review: Revision

Title: Application for License, Under 18 U.S.C. chapter 44, Firearms

Description: This form is used when applying for a Federal firearms license as a dealer, importer or manufacturer. The information requested on the form establishes eligibility for the license.

Respondents: Individuals or households, Businesses or other for-profit, Small businesses or organizations

Estimated Number of Respondents: 35,000

Estimated Burden Hours Per Respondent: 1 hour, 15 minutes

Frequency of Response: On occasion

Estimated Total Reporting Burden: 43,750 hours.

Clearance Officer: Robert N. Hogarth (202) 927-8930, Bureau of Alcohol, Tobacco and Firearms, room 3200, 650 Massachusetts Avenue, NW., Washington, DC 20226.

OMB Reviewer: Milo Sunderhauf, (202) 395-6880, Office of Management and Budget, room 3001, New Executive Office Building, Washington, DC 20503.

Lois K. Holland,

Departmental Reports, Management Officer.

[FR Doc. 93-30619 Filed 12-15-93; 8:45 am]

BILLING CODE 4810-31-P

[Treasury Directive Number 25-06]

The Treasury Data Integrity Board; Policy and Procedures

Dated: December 9, 1993.

1. Purpose. This directive establishes a Department of the Treasury Data Integrity Board (hereafter referred to as the "Board") pursuant to the Computer Matching and Privacy Protection Act of 1988 (Pub. L.) 100-503). It also sets forth the policy and procedures to be implemented by the Board.

2. Scope. This directive applies to the Departmental Offices (DO), the Office of Inspector General, and all bureaus that have matching programs subject to the Computer Matching and Privacy Protection Act (hereafter referred to as the "Computer Matching Act").

3. Policy. It is the policy of the Department of the Treasury that:

a. The Board shall provide Departmental oversight and coordinate the implementation of the Computer Matching Act within the Department;

b. All bureaus that conduct matching programs covered by the Computer Matching Act shall:

(1) Develop matching agreements approved by both source and recipient agencies; and

(2) Submit such agreements to the Board for approval at least 60 days before the date the match is to be conducted.

4. Background. The Computer Matching Act amends the Privacy Act of 1974 (hereafter referred to as the "Privacy Act") to establish procedural safeguards regarding the use of Privacy Act records by Federal agencies for certain types of computerized matching programs. Each Federal agency that acts as either a source or recipient in a matching program is required to establish a Board to oversee the agency's participation.

5. Definitions. Since the Computer Matching Act is an amendment of the Privacy Act of 1974, the provisions of the Computer Matching Act should be read within the context of the Privacy Act. All the terms defined in the Privacy Act apply. See Attachment 1 for definitions contained in the Computer Matching Act.

6. Treasury Data Integrity Board. The Board is responsible for oversight and coordination of computer matching programs covered by the Computer Matching Act within the Department. The Board may delegate responsibilities such as compiling reports, advising program officials, and maintaining and distributing information about the accuracy and reliability of data used in matching. The approval of matching agreements may not be delegated. See Attachment 2 for the operational procedures of the Board. The principal responsibilities of the Data Integrity Board are listed below.

a. Review, approve, and maintain all written agreements for receipt or disclosure of agency records for matching programs to ensure compliance with all relevant statutes, regulations, and guidelines.

b. Review all matching programs in which Treasury has participated during the year, either as a source agency or recipient agency; determine compliance with applicable laws, regulations, guidelines, and agency agreements; and assess the costs and program benefits, if appropriate.

c. Review all recurring matching programs in which Treasury has participated during the year, either as a source agency or recipient agency, for continued justification for such disclosures.

d. Compile a biennial report to be submitted to the Secretary of the Treasury and the Office of Management and Budget (OMB) and made available to the public on request. The report shall describe:

(1) The matching activities Treasury has participated in as a source or recipient agency;

(2) Matching agreements disapproved by the Board;

(3) Any changes in Board membership or structure during the preceding year;

(4) The reasons for any waiver of the requirements of the Computer Matching Act; and

(5) Any violations of matching agreements and corrective action taken.

e. Serve as a clearinghouse for receiving and providing information on the accuracy, completeness, and reliability of records used in matching programs.

f. Review all requests for pilot matches. Approve or disapprove such requests based upon the assessment of the supporting documentation.

g. Provide interpretation and guidance to Treasury components and personnel on the requirements for matching programs and privacy protection.

h. Review Treasury recordkeeping and disposal policies and practices for matching programs to assure compliance with the requirements for matching programs and privacy protection.

i. May review and report on any Treasury matching activities that are not matching programs.

7. Responsibilities. a. The Deputy Assistant Secretary (Information Systems) and the Inspector General shall serve as mandatory members of the Board, as required by the Act.

b. The Deputy Assistant Secretary (Administration), Heads of Bureaus, the Inspector General, and Senior IRM Officials, as it relates to their respective bureaus and offices, shall:

(1) Establish internal bureau procedures to ensure the effectiveness of the Computer Matching Act Program. The procedures shall be consistent with:

(a) OMB Matching Guidelines;

(b) OMB Circular A–130;

(c) the Privacy Act of 1974, as amended; and

(d) OMB Bulletin 89–22;

(2) Ensure that employees responsible in any part for matching activities are knowledgeable about the provisions and requirements of the Computer Matching Act;

(3) Report new and ongoing matching activities to the Board; and

(4) Submit the following information, as required, to the Board:

(a) Data for OMB's biennial Matching Activity Report to Congress; and

(b) A report on the review of each ongoing matching program in which the component has participated during the year, either as a source or as a matching agency.

c. The Director, Office of Information Resources Management (OIRM), DO, shall provide the day-to-day operational support for the Board, and shall:

(1) Forward to each Board member a copy of the matching agreement for Board member action;

(2) Notify the component submitting the matching agreement if a Board member recommends disapproval of a matching agreement, or non-concurs;

(3) Provide a summary of Board members' recommendations to the Chairperson for final approval or disapproval;

(4) Maintain the official files on correspondence, OMB guidelines, procedures, and any other documentation pertinent to the Board and its activities;

(5) Prepare correspondence, reports, schedules, plans, and procedures as necessary for the Board to oversee and coordinate computer matching and privacy protection activities within the Department;

(6) Coordinate and prepare the biennial report for the Chairperson's signature;

(7) Provide critical review and analysis of issues and problems impacting on computer matching and privacy protection activities within the Department; and

(8) Advise the Board on the operational implications of policy decisions made necessary by congressional, OMB and/or Board action.

d. The Departmental Disclosure Officer, Administrative Operations Division, DO, shall:

(1) Serve as a permanent member and the Secretary to the Board and keep detailed minutes of each meeting;

(2) Provide policy guidance and direction on privacy protection matters as they relate to computer matching and the implementation of those portions of the Computer Matching Act that deal with the protection of the rights of individuals; and

(3) Maintain the official files on matching agreements and minutes of Board meetings.

8. Requirements. Treasury components undertaking matching programs covered by the Computer Matching Act need to make sure they comply with requirements set forth in the guidance from OMB published in the **Federal Register** on June 19, 1989.

a. Comply with Privacy Act systems of records and disclosure provisions.

b. Provide prior notice to record subjects.

c. Publish matching notices as required.

d. Prepare and execute matching agreements.

e. Obtain approval by the Board of all matching agreements.

f. Submit reports to OMB and Congress.

g. Provide due process to matching subjects.

9. Review of Matching Programs. Components submitting matching agreements for the Board's approval shall send a memorandum to the Director, OIRM, that states the purpose of the matching agreement and provides a summary of revisions, if applicable. This memo should be prepared by the component function designated as the liaison to the Board. An original and seven copies of the memorandum shall be submitted to OIRM for distribution to each Board member. Components are responsible for:

a. Publication of notices of the establishment, or alteration, of matching programs in the **Federal Register** at least 30 days before conducting a match; and

b. Transmittal of the matching agreement to the Senate Committee on Governmental Affairs and to the House Committee on Government Operations at least 30 days prior to the initiation of matching activity.

10. Appeals of Denials of Matching Agreements. a. Disapproval by the Board. If the Board disapproves a matching agreement, a party to the agreement may appeal the disapproval to the Director, OMB, Washington, DC 20503. Appeals must be made within 30 days after the Board's written disapproval. The appealing party shall submit with its appeal the following information:

(1) Copies of all documentation accompanying the initial matching agreement proposal;

(2) A copy of the Board's disapproval and reasons therefore;

(3) Evidence supporting the cost effectiveness of the match; and

(4) Other relevant information, i.e., timing considerations, public interest served by the match, etc.

b. OMB Approval. A matching program approved by OMB in response to such appeal will not become effective until 30 days after the Director, OMB, reports the decision to Congress.

c. Recourse by the Inspector General. If the Board and the Director, OMB, both disapprove a matching program proposed by the Inspector General of the agency, the Inspector General may report that disapproval to the head of the agency and to the Congress.

11. Cost-Benefit Analysis. Components proposing matching programs must provide the Board with all information which is relevant and necessary to allow the Board to make an informed decision including a cost-

benefit analysis. Statutorily mandated matches need not demonstrate a positive dollar cost-benefit analysis. All decisions of the Board will be well-documented. The Board must find that agreements conform to the provisions of the Computer Matching Act and appropriate guidelines, regulations, and statutes.

12. Authorities. a. The Computer Matching and Privacy Protection Act of 1988, (Pub. L. 100–503).

b. The Privacy Act of 1974, (5 U.S.C. 552a).

c. OMB Circular A–130, Revised, Transmittal Memorandum 1, "Management of Federal Information Resources," Appendix I, dated June 25, 1993.

d. OMB Bulletin 89–22, "Instructions on Reporting Computer Matching Programs to the Office of Management and Budget (OMB), Congress and the Public," dated September 20, 1989.

e. OMB Final Guidance Interpreting the Provisions of Public Law 100–503, the Computer Matching and Privacy Protection Act of 1988, (54 FR 25817, June 19, 1989).

f. OMB Guidelines on the Administration of the Privacy Act of 1974, issued July 1, 1975, and supplemented on November 21, 1975.

13. Reference. To 102–12, "Delegation of Authority to the Senior Official," dated June 21, 1991.

14. Office of Primary Interest. Office of the Deputy Assistant Secretary (Information Systems), Office of the Assistant Secretary (Management)/ Chief Financial Officer.

George Muñoz,

Assistant Secretary (Management)/Chief Financial Officer.

Attachment 1—Definitions

1. *Individual.* A citizen of the United States or an alien lawfully admitted for permanent residence.

2. *Maintain.* Maintain, collect, use or disseminate.

3. *Record.* Any item, collection, or grouping of information about an individual that is maintained by an agency, including, but not limited to, education, financial transactions, medical history, and criminal or employment history and that contains a name, or the identifying number, symbol, or other identifying particular assigned to the individual, such as a finger or voice print or a photograph.

4. *System of Records.* A group of any records under the control of any agency from which information is retrieved by the name of the individual or by some identifying number, symbol, or other identifying particular assigned to the individual.

5. *Statistical Record.* A record in a system of records maintained for statistical research or reporting purposes only and not used in whole or in part in making any determination about an identifiable individual, except as provided by section 8 of Title 13.

6. *Routine Use.* The term "routine use" means, with respect to the disclosure of a record, the use of such record for a purpose which is compatible with the purpose for which it was collected.

7. *Matching Program.* The term "matching program:"

a. Means any computerized comparison of:

(1) Two or more automated systems of records or a system of records with non-Federal records for the purpose of:

(a) Establishing or verifying the eligibility of, or continuing compliance with statutory and regulatory requirements by, applicants for, recipients or beneficiaries of, participants in, or providers of services with respect to, cash or in-kind assistance or payments under Federal benefit programs, or

(b) Recouping payments or delinquent debts under such Federal benefit programs; or

(2) Two or more automated Federal personnel or payroll systems of records or a system of Federal personnel or payroll records with non-Federal records.

b. But does not include:

(1) Matches performed to produce aggregate statistical data without any personal identifiers;

(2) Matches performed to support any research or statistical project, the specific data of which may not be used to make decisions concerning the rights, benefits, or privileges of specific individuals;

(3) Matches performed, by an agency (or component thereof) which performs as its principal function any activity pertaining to the enforcement of criminal laws, subsequent to the initiation of a specific criminal or civil law enforcement investigation of a named person or persons for the purpose of gathering evidence against such person or persons;

(4) Matches of tax information:

(a) Pursuant to section 6103(d) of the Internal Revenue Code of 1986;

(b) For purposes of tax administration as defined in section 6103(b)(4) of such Code;

(c) For the purpose of intercepting a tax refund due an individual under authority granted by section 464 or 1137 of the Social Security Act; or

(d) For the purpose of intercepting a tax refund due an individual under any other tax refund intercept program authorized by statute which has been determined by the Director of the Office of Management and Budget to contain verification, notice, and hearing requirements that are substantially similar to the procedures in section 1137 of the Social Security Act;

(5) Matches:

(a) Using records predominantly relating to Federal personnel, that are performed for routine administrative purposes (subject to guidance provided by the Director of the Office of Management and Budget pursuant to subsection (v));

(b) Conducted by an agency using only records from systems of records maintained by that agency; or

(c) If the purpose of the match is not to take any adverse financial, personnel, disciplinary, or other adverse action against Federal personnel; or

(6) Matches performed for foreign counterintelligence purposes or to produce background checks for security clearances of Federal personnel or Federal contractor personnel.

8. *Recipient Agency.* Any agency, or contractor thereof, receiving records contained in a system of records from a source agency for use in a matching program.

9. *Non-Federal Agency.* Any State or local government, or agency thereof, which receives records contained in a system of records from a source agency for use in a matching program.

10. *Source Agency.* Any agency which discloses records contained in a system of records to be used in a matching program, or any State or local government, or agency thereof, which discloses records to be used in a matching program.

11. *Federal Benefit Program.* Any program administered or funded by the Federal Government, or by any agent or State on behalf of the Federal Government, providing cash or in-kind assistance in the form of payments, grants, loans, or loan guarantees to individuals.

12. *Federal Personnel.* Officers and employees of the Government of the United States, members of the uniformed services (including members of the Reserve Components), individuals entitled to receive immediate or deferred retirement benefits under any retirement program of the Government of the United States (including survivor benefits).

Attachment 2—Operation of the Board

1. *Membership.* The membership of the Board shall consist of senior agency officials designated by the agency head.

a. The two mandatory senior agency officials required by the Act and designated as members of the Board are:

(1) The Deputy Assistant Secretary (Information Systems), the Treasury senior official responsible for the implementation of the Privacy Act pursuant to 44 U.S.C. 3506(b); and

(2) The Inspector General.

b. The senior agency officials are designated from bureaus, Departmental Offices, and major offices.

c. Subject to the requirements of the Computer Matching Act, the Chairperson may add to or reduce the Board's total active membership. Board membership may also be changed by the Chairperson due to reorganization or program/functional realignment. Changes in membership on the Board do not require the approval of the Secretary.

d. In accordance with OMB Guidelines on Computer Matching, the agency Privacy Act Officer shall serve as the Board's Secretary and keep detailed minutes of each meeting.

e. The agency Privacy Act Officer shall be responsible for policy guidance and direction on privacy protection matters with respect to computer matching and implementing sections of the Computer Matching Act concerning the protection of the rights of individuals.

f. Board members or their designees must attend all Board meetings.

2. *Delegations.* The senior agency officials or designated bureau Board members may designate senior level officials to act on their behalf as either alternates or substitutes. In the absence of the Chairperson, that official may delegate authority to other members of the Board or to the Deputy Assistant Secretary (Information Systems).

3. *Meetings.* The Board shall meet as often as necessary to ensure that the Treasury matching programs are carried out efficiently, expeditiously, and in conformance with the Privacy Act, as amended. The Board will, in general, meet at the call of the Chairperson to accomplish duties set forth in the Computer Matching Act and to establish computer matching policy, and to issue guidance to components of the Department. Furthermore, the Board shall:

a. Hold meetings periodically as determined by the Chairperson or when requested by two or more of the members of the Board;

b. Have no fewer than five members present for a quorum;

c. Meet annually during the first quarter of each fiscal year to review an inventory of all matching programs in which Treasury has participated as either a source or recipient agency during the preceding fiscal year to determine compliance with applicable laws, regulations, guidelines, and agency agreements. For audit purposes, this review will include a random sampling of matches to check expiration dates, source/recipient, and cost/benefit analyses; and

d. Take action at an official meeting on a matching agreement whenever:

(1) Members are given sufficient notice (usually one week) of a meeting of the Board; and

(2) The meeting is attended by the Chairperson or designee and at least five other Board members other than designees.

4. *The Chairperson of the Board.* The Deputy Assistant Secretary (Information Systems), who has been designated by the Secretary through Treasury Order 102–12 as the senior official responsible for the implementation of the Privacy Act, shall serve as Chairperson, and shall:

a. Call meetings of the Board;

b. Provide leadership in the development of agenda items, in the conduct of Board meetings, and in guiding Board discussions;

c. Inform the Secretary of the major events and plans affecting matching activities within the Department;

d. Supervise, directly or indirectly, the working groups established to support Board activities and functions, together with Departmental staff involved in providing technical, administrative or management support to the Board;

e. Serve as the focal point with OMB and the Congress on all matters pertaining to the operation and management of matching programs in the Department;

f. At their discretion, convene the Board to review and approve matching agreements. Procedures for the review and approval of matching agreements will allow the Board members to take such actions without formally convening;

g. In the event of a conditional approval, have the authority to determine when the condition(s) have been met, and officially approve the agreement; and

h. Call a meeting of the Board at the earliest feasible date (i.e., not later than two weeks) if the component indicates that it does not accept the disapproval of a matching agreement, or is unable to come to an agreement with a Board member's recommendations.

5. *Meeting Agenda.* Any Board member may submit to the Chairperson for review any item of interest which is pertinent to the work of the Board, the operation and management of computer matching programs within the agency, or items which relate to privacy protection and individual rights. All pertinent information on the matters under consideration must be submitted for the Board's consideration in completed form either in writing or by oral presentation before the Board.

6. *Voting.* All members may vote, and each member has one vote. Decisions on issues are provided by a vote from the members. In its advisory capacity, the Board presents decisions to the Chairperson for approval or disapproval. The decision of the Board to approve or disapprove will be governed by majority vote of those present. In the case of a tie among the members, the Chairperson will act as the tie breaker.

7. *Official Correspondence.* All official correspondence and minutes of the Board will be prepared in writing over the signature of the Chairperson, with copies going to the Board members.

[FR Doc. 93–30620 Filed 12–15–93; 8:45 am]

BILLING CODE 4810–25–P

UNITED STATES SENTENCING COMMISSION

Sentencing Guidelines for United States Courts

AGENCY: United States Sentencing Commission.

ACTION: Notice of public availability of final report of Advisory Working Group on Environmental Offenses. Request for public comment.

SUMMARY: The Advisory Working Group on Environmental Offenses, an independent advisory group constituted by the United States Sentencing Commission, recently submitted its final report to the Commission. Interested persons may obtain the Advisory Working Group's report by contacting the Commission. The Commission invites comment on the report's draft sentencing guidelines and policy statements for organizations convicted of environmental offenses and the submission of alternative approaches.

ADDRESSES: Public comment/alternative proposals may be submitted to: United States Sentencing Commission, One Columbus Circle, NE., suite 2–500, South Lobby, Washington, DC 20002–8002, Attention: Staff Director.

FOR FURTHER INFORMATION OR A COPY OF THE REPORT CONTACT: Michael Courlander, Public Information Specialist, Telephone: (202) 273–4590.

SUPPLEMENTARY INFORMATION: On November 16, 1993, the United States Sentencing Commission received a draft of proposed sentencing guidelines and policy statements for organizations convicted of environmental offenses prepared by an independent Advisory Working Group on Environmental Offenses. The draft constitutes the final report of this panel comprising individuals from the government, defense bar, business community, public interest groups, and academia. The draft proposal represents solely the work of the Advisory Group and has been submitted to the Commission for its consideration. It should be clear that while the Commission appreciates the efforts of the Advisory Working Group, the draft being circulated is not a reflection of the Commission's position, but rather a reflection of the Advisory Work Group's efforts to delimit the parameters of what they determined was a viable and reasonable structure.

The Advisory Working Group's draft proposal is being made available to interested individuals and groups to stimulate and facilitate comment on the issue of sanctions for organizations convicted of environmental offenses. The Commission welcomes comments on the Advisory Group's proposal, as well as the submission of alternative approaches.

Authority: 28 U.S.C. 994 (a), (o).

William W. Wilkins, Jr.,

Chairman.

[FR Doc. 93-30608 Filed 12-15-93; 8:45 am]

BILLING CODE 2210-01-M

UNITED STATES INFORMATION AGENCY

Culturally Significant Objects Imported for Exhibition; Determination

Notice is hereby given of the following determination: Pursuant to the authority vested in me by the Act of October 19, 1965 (79 Stat. 985, 22 U.S.C. 2459), Executive Order 12047 of March 27, 1978 (43 FR 13359, March 29, 1978), and Delegation Order No. 85-5 of June 27, 1985 (50 FR 27393, July 2, 1985), I hereby determine that the object "St. John the Baptist", imported from abroad for the temporary exhibition without profit within the United States, is of cultural significance. This object is imported pursuant to a loan agreement with the foreign lender. I also determine that the temporary exhibition or display of the listed exhibit object at the National Gallery of Art, from on or about January 30, 1994 to on or about May 15, 1994, is in the national interest.

Public Notice of this determination is ordered to be published in the **Federal Register.**

Dated: December 10, 1993.

Lorie J. Nierenberg,

Acting General Counsel.

[FR Doc. 93-30663 Filed 12-15-93; 8:45 am]

BILLING CODE 8230-01-M

Freedom Support Act—Secondary School Initiative for School Linkages

AGENCY: United States Information Agency.

ACTION: Amendment—request for proposals.

SUMMARY: This is an amendment to the request for proposals (RFP) published December 2, 1993 (58 FR 63621) regarding exchanges through school linkage programs with the twelve Newly Independent States (NIS) of the former Soviet Union (Announcement Number E/P-94-15). This amendment specifically refers to the exchange of teachers and administrators. At the time of publication, there were funding constraints which limited the teacher component to programs with Russia only. New finding has just become available which will enable teacher programs to be supported for school linkages with the other eleven NIS republics, as well. Therefore, the RFP is amended to delete the caveats that refer to "Russia only" and to substitute "NIS" for "Russia" or "Russian" in all other places except where the latter pertains to the Russian language.

FOR FURTHER INFORMATION CONTACT:

For clarification, contact Diana Aronson, NIS Secondary School Division (E/PY), room 314, (202) 619-6299.

Dated: December 10, 1993.

Barry Fulton,

Acting Associate Director, Bureau of Educational and Cultural Affairs.

[FR Doc. 93-30609 Filed 12-15-93; 8:45 am]

BILLING CODE 8230-01-M

DEPARTMENT OF VETERANS AFFAIRS

Wage Committee; Meetings

The Department of Veterans Affairs (VA), in accordance with Public Law 92-463, gives notice that meetings of the VA Wage Committee will be held on:

Wednesday, January 5, 1994, at 2 p.m.
Wednesday, January 19, 1994, at 2 p.m.
Wednesday, February 2, 1994, at 2 p.m.
Wednesday, February 16, 1994, at 2 p.m.
Wednesday, March 2, 1994, at 2 p.m.
Wednesday, March 16, 1994, at 2 p.m.
Wednesday, March 30, 1994, at 2 p.m.

The meetings will be held in room 1161, Veterans Affairs Central Office, 810 Vermont Avenue, NW., Washington, DC 20420.

The Committee's purpose is to advise the Under Secretary for Health on the development and authorization of wage schedules for Federal Wage System (blue-collar) employees.

At these meetings the Committee will consider wage survey specifications, wage survey data, local committee reports and recommendations, statistical analyses, and proposed wage schedules.

All portions of the meetings will be closed to the public because the matters considered are related solely to the internal personnel rules and practices of the Department of Veterans Affairs and because the wage survey data considered by the Committee have been obtained from officials of private business establishments with a guarantee that the data will be held in confidence. Closure of the meetings is in accordance with subsection 10(d) of Public Law 92-463, as amended by Public Law 94-409, and as cited in 5 U.S.C. 552b(c) (2) and (4).

However, members of the public are invited to submit material in writing to the Chairperson for the Committee's attention.

Additional information concerning these meetings may be obtained from the Chairperson, VA Wage Committee, room 1161, 810 Vermont Avenue, NW., Washington, DC 20420.

Dated: December 7, 1993.

By Direction of the Secretary.

Heyward Bannister,

Committee Management Officer.

[FR Doc. 93-30672 Filed 12-15-93; 8:45 am]

BILLING CODE 8320-01-M

Sunshine Act Meetings

Federal Register
Vol. 58, No. 240
Thursday, December 16, 1993

This section of the FEDERAL REGISTER contains notices of meetings published under the "Government in the Sunshine Act" (Pub. L. 94-409) 5 U.S.C. 552b(e)(3).

FEDERAL DEPOSIT INSURANCE CORPORATION

Pursuant to the provisions of the "Government in the Sunshine Act" (5 U.S.C. 552b), notice is hereby given that the Federal Deposit Insurance Corporation's Board of Directors will meet in open session at 10:00 a.m. on Tuesday, December 21, 1993, to consider the following matters:

SUMMARY AGENDA: No substantive discussion of the following items is anticipated. These matters will be resolved with a single vote unless a member of the Board of Directors requests that an item be moved to the discussion agenda.

Disposition of minutes of previous meetings.

Reports of actions approved by the standing committees of the Corporation and by officers of the Corporation pursuant to authority delegated by the Board of Directors.

Memorandum and resolution re: Notice of establishment of a new system of records, entitled "Affordable Housing Program Records System," which system of records relates to files maintained on individuals who are purchasers or prospective purchasers of residential properties offered for sale through the Corporation's Affordable Housing Program.

DISCUSSION AGENDA: Memorandum and resolution re: Proposed statement of policy which sets forth guidance with respect to the conversion from mutual to stock ownership of State chartered savings banks and the Corporation's concerns on the matter.

The meeting will be held in the Board Room on the sixth floor of the FDIC Building located at 550—17th Street, NW., Washington, D.C.

The FDIC will provide attendees with auxiliary aids (e.g., sign language interpretation) required for this meeting. Those attendees needing such assistance should call (202) 942-3132 (Voice); (202) 942-3111 (TTY), to make necessary arrangements.

Requests for further information concerning the meeting may be directed to Mr. Robert E. Feldman, Deputy Executive Secretary of the Corporation, at (202) 898-6757.

Dated: December 14, 1993.

Robert E. Feldman,

Deputy Executive Secretary.

[FR Doc. 93-30906 Filed 12-14-93; 3:24 pm]

BILLING CODE 6714-01-M

FEDERAL DEPOSIT INSURANCE CORPORATION

Pursuant to the provisions of the "Government in the Sunshine Act" (5 U.S.C. 552b), notice is hereby given that at 10:30 a.m. on Tuesday, December 21, 1993, the Federal Deposit Insurance Corporation's Board of Directors will meet in closed session, by vote of the Board of Directors, pursuant to sections 552b(c)(2), (c)(4), (c)(6), (c)(8), (c)(9)(A)(ii), (c)(9)(B), and (c)(10) of Title 5, United States Code, to consider the following matters:

SUMMARY AGENDA: No substantive discussion of the following items is anticipated. These matters will be resolved with a single vote unless a member of the Board of Directors requests that an item be moved to the discussion agenda.

Reports of the Office of Inspector General.

Recommendations with respect to the initiation, termination, or conduct of administrative enforcement proceedings (cease-and-desist proceedings, termination-of-insurance proceedings, suspension or removal proceedings, or assessment of civil money penalties) against certain insured depository institutions or officers, directors, employees, agents or other persons participating in the conduct of the affairs thereof:

Names of persons and names and locations of depository institutions authorized to be exempt from disclosure pursuant to the provisions of subsections (c)(6), (c)(8), and (c)(9)(A)(ii) of the "Government in the Sunshine Act" (5 U.S.C. 552b(c)(6), (c)(8), and (c)(9)(A)(ii)).

Note: Some matters falling within this category may be placed on the discussion agenda without further public notice if it becomes likely that substantive discussion of those matters will occur at the meeting.

DISCUSSION AGENDA: Matters relating to the Corporation's corporate, supervisory, and resolution activities.

The meeting will be held in the Board Room on the sixth floor of the FDIC Building located at 550—17th Street, NW., Washington, DC.

Requests for further information concerning the meeting may be directed to Mr. Robert E. Feldman, Deputy Executive Secretary of the Corporation, at (202) 898-6757.

Dated: December 14, 1993.

Robert E. Feldman,

Deputy Executive Secretary.

[FR Doc. 93-30907 Filed 12-14-93; 3:24 pm]

BILLING CODE 6714-01-M

federal register

Thursday
December 16, 1993

Part II

Environmental Protection Agency

40 CFR Part 63

Proposed Standards for Chromium Emissions From Hard and Decorative Chromium Electroplating and Chromium Anodizing Tanks; Proposed Rule

ENVIRONMENTAL PROTECTION AGENCY

40 CFR Part 63

[AD-FRL-4810-5]

RIN 2860-AC14

National Emission Standards for Hazardous Air Pollutants; Proposed Standards for Chromium Emissions From Hard and Decorative Chromium Electroplating and Chromium Anodizing Tanks

AGENCY: Environmental Protection Agency (EPA).

ACTION: Proposed rule and notice of public hearing.

SUMMARY: The proposed standards would limit emissions of chromium compounds from new and existing chromium electroplating and anodizing operations; both major and area sources are being regulated. The proposed standards implement section 112 of the Clean Air Act, as amended. The intent of the standards is to protect the public health by minimizing the amount of chromium emitted from new and existing chromium electroplating and anodizing operations. These sources must achieve an emissions level consistent with the installation and operation of maximum achievable control technology (MACT). The EPA is also proposing Methods 306, 306A, and 306B with the standards. These methods would be used to demonstrate compliance with the standards.

DATES: *Comments:* Comments must be received on or before February 14, 1994.

Public Hearing: If anyone contacts EPA requesting to speak at a public hearing by January 6, 1994, a public hearing will be held on January 18, 1994, beginning at 10 a.m.

ADDRESSES: *Comments:* Comments should be submitted (in duplicate if possible) to: Air Docket (LE-131), Attention: Docket Number A-88-02, U.S. Environmental Protection Agency, 401 M Street, SW., Washington, DC 20460.

Public Hearing: If anyone contacts EPA requesting a public hearing, the hearing will be held at the EPA Office of Administration Auditorium in Research Triangle Park, North Carolina. Persons interested in attending the hearing or wishing to present oral testimony should notify Mrs. Julia Latta, Standards Development Branch (MD-13), U.S. Environmental Protection Agency, Research Triangle Park, North Carolina 27711, telephone number (919) 541-5578.

Background Information Document: The background information document (BID) and other documents supporting the proposed standards may be obtained from the docket or from the U.S. EPA Library (MD-35), Research Triangle Park, North Carolina 27711, telephone number (919) 541-2777. Please refer to "Chromium Electroplating NESHAP—Background Information Document for Proposed Standards" (Volume I: EPA-453/R-93-030a and Volume II: EPA-453/R-93-030b) and to "Chromium Electroplating NESHAP—New Technology Document" (EPA-453/R-93-031).

Docket: Docket No. A-88-02, containing supporting information used in developing the proposed standards, is available for public inspection and copying between 8 a.m. and 4 p.m., Monday through Friday, at EPA's Air Docket Section, West Tower Lobby, Gallery 1, Waterside Mall, 401 M Street, SW., Washington, DC 20460. A reasonable fee may be charged for copying.

FOR FURTHER INFORMATION CONTACT: For information concerning regulatory decisions and the proposed standards, contact Mr. Lalit Banker, Standards Development Branch ((919) 541-5420). For information concerning technical aspects of chromium electroplating and anodizing tanks or control technologies, contact Mr. Phil Mulrine, Industrial Studies Branch ((919) 541-5289). The address for each of these contacts is Emission Standards Division (MD-13), U. S. Environmental Protection Agency, Research Triangle Park, North Carolina 27711.

SUPPLEMENTARY INFORMATION: The information presented in this preamble is organized as follows:

I. Background
II. National Emission Standards for Hazardous Air Pollutants Decision Process
A. Source of Authority for NESHAP Development
B. Criteria for Development of NESHAP
C. Categorization/Subcategorization: Determining Maximum Achievable Control Technology Floors
D. Regulatory Approach and Regulatory Alternatives
III. Overview of Proposed Standards
A. Applicability of the Standards
B. Format of the Standards
C. Actual Standards and Their Bases
D. Test Methods for Compliance
E. Monitoring Requirements
F. Reporting and Recordkeeping Requirements
IV. Impacts of the Standards
A. Hard Chromium Electroplating Tanks
B. Decorative Chromium Electroplating Tanks
C. Chromium Anodizing Tanks
V. Process Description and Description of Control Technologies
A. Process Descriptions
B. Description of Control Technologies
VI. Rationale for Selection of the Proposed Standards
A. Selection of Pollutant and Source Categories to be Regulated
B. Selection of Emission Points to be Covered by the Standard
C. Selection of Basis and Level of Proposed Standards for Existing and New Sources
D. Selection of the Format of the Proposed Standards
E. Selection of the Emission Limits
F. Selection of Definition of Source
G. Selection of Monitoring Requirements
H. Selection of Test Methods
I. Selection of Reporting and Recordkeeping Requirements
J. Operating Permit Program
K. Solicitation of Comments
VII. Administrative Requirements
A. Public Hearing
B. Docket
C. Executive Order 12866
D. Paperwork Reduction Act
E. Regulatory Flexibility Act
F. Miscellaneous

I. Background

In 1984, the EPA began an investigation of chromium electroplating operations as a source of chromium emissions in conjunction with a notice of intent to list total or hexavalent chromium as a hazardous air pollutant (HAP) under section 112 of the Clean Air Act (50 FR 24317). This study focused on chromium emissions from chromium electroplating and anodizing tanks. (Due to the focus of this study, information was not obtained on HAP emissions from other metal plating processes such as nickel, copper, and cadmium plating. As a result, these processes are not included in today's proposal.) During this study, it was determined that chromium electroplating and anodizing tanks were significant emitters of chromic acid, the principal ingredient in chromium electroplating and anodizing baths. Chromic acid is a hexavalent chromium compound. The EPA has determined that there is strong evidence to conclude that hexavalent chromium compounds cause lung cancer in humans. This conclusion was documented in the notice of intent to list total or hexavalent chromium (50 FR 24317). Trivalent chromium compounds are emitted in low levels from those decorative electroplating tanks that use trivalent chromium electroplating solutions. The data on the carcinogenicity of trivalent chromium are inconclusive at this time; however, it is known that trivalent chromium can accumulate in the lungs and could potentially result in decreased lung

function under extended exposure conditions.

On November 15, 1990, the Clean Air Act was amended. Section 112(b) of the amended Act provides a list of 189 compounds that are considered to be HAP. Chromium compounds are included on this list of pollutants. Under section 112(c) of the Act, the Administrator is required to publish and from time to time revise a list of source categories and subcategories that emit one or more of the HAP listed in section 112(b). On July 16, 1992, EPA published in the **Federal Register** (57 FR 31576) an initial list of major and area source categories to be regulated, which included major and area sources of hard chromium electroplating, decorative chromium electroplating, and chromium anodizing. Emission standards under section 112(d) of the Act are being proposed for all six of these source categories. The study of these source categories that had begun in 1984 continued and became the basis for this proposed rule.

Subcategorization of each of the above categories was studied. The EPA study concluded that major and area sources of emissions from hard chromium electroplating and chromium anodizing tanks should not be subcategorized. However, it was determined that major and area sources of emissions from decorative chromium electroplating tanks should be subcategorized according to whether a trivalent chromium or chromic acid electroplating bath solution is used. The chromic acid and trivalent chromium processes are considered separate source subcategories because the trivalent chromium process differs in several ways from the chromic acid electroplating process. For example, the electroplating bath chemistry for trivalent baths is comprised mostly of trivalent chromium; hexavalent chromium is considered a bath contaminant, whereas it is the main ingredient in a chromic acid bath. In addition, the process line for a trivalent chromium electroplating process differs from that used with a chromic acid electroplating bath. In particular, additional rinse tanks or post dips are added to the electroplating line in the trivalent chromium electroplating processes (for more information, see discussion of trivalent chromium electroplating tanks in section V.A.2 of this preamble).

The Agency's findings indicate that a majority of the sources in the six source categories are not major sources as defined in section 112(a)(1); i.e., they do not emit or have the potential to emit greater than 9.1 Megagrams per year (Mg/yr) (10 tons per year (tons/yr)) of chromium compounds. Some sources would be considered major if the source is located at a facility that is major. In such cases, the source would be regulated as a major source. Based on the fact that most sources would not be considered major and considering the toxicity of chromium compounds, EPA has chosen to regulate area sources as well as major sources as documented in the area source finding for these six source categories (57 FR 31576). Further, the proposed rule would regulate both major and area sources by applying maximum achievable control technology (MACT).

II. National Emission Standards for Hazardous Air Pollutants Decision Process

A. Source of Authority for NESHAP Development

Section 112 of the 1990 Clean Air Act gives EPA the authority to establish national standards to reduce air toxics from sources that emit one or more HAP. Section 112(b) contains a list of HAP that are the specific air toxics to be regulated by national emission standards for hazardous air pollutants (NESHAP). Section 112(c) directs EPA to use this pollutant list to develop and publish a list of source categories for which NESHAP will be developed. The EPA must list all known categories and subcategories of "major sources" (defined below) which emit one or more of the listed HAP. Area source categories selected by EPA for NESHAP development will be based on the Administrator's judgment that the sources in a category, individually or in aggregate, pose a "threat of adverse effects to health and the environment."

B. Criteria for Development of NESHAP

The NESHAP are to be developed to control HAP emissions from both new and existing sources according to the statutory directives set out in section 112 of the Act. The statute requires the standard to reflect the maximum degree of reduction in emissions of HAP that is achievable for new or existing sources. The NESHAP must reflect consideration of the cost of achieving the emission reduction, any nonair quality health and environmental impacts, and energy requirements for control levels more stringent than the MACT floor (described below). The emission reduction may be accomplished through application of measures, processes, methods, systems or techniques, including, but not limited to, measures which:

(A) Reduce the volume of, or eliminate emissions of, such pollutants through process changes, substitution of materials, or other modifications;

(B) Enclose systems or processes to eliminate emissions;

(C) Collect, capture, or treat such pollutants when released from a process, stack, storage, or fugitive emissions point;

(D) Are design, equipment, work practice, or operational standards including requirements for operator training or certification as provided in section 112(h); or

(E) Are a combination of the above (section 112(d)(2)).

To develop NESHAP, EPA collects information about the industry, including information on emission source characteristics, control technologies, data from HAP emission tests at well-controlled facilities, and information on the costs and other energy and environmental impacts of emission control techniques. The EPA uses this information to analyze possible regulatory approaches.

Although NESHAP are normally structured in terms of numerical emission limits, alternative approaches are sometimes necessary. In some cases, physically measuring emissions from a source may be impossible or at least impracticable due to technological and economic limitations. Section 112(h) authorizes the Administrator to promulgate a design, equipment, work practice, or operational standard, or combination thereof, in those cases where it is not feasible to prescribe or enforce an emissions standard.

If sources in the source category are major sources, then a MACT standard is required. For area sources, the Administrator has the option of establishing either a MACT standard or a standard based on generally available control technologies (GACT) (section 112(d)(5)). To establish a MACT standard, the level of control corresponding to the MACT floor needs to be determined as a starting point for developing the regulatory alternatives.

C. Categorization/Subcategorization: Determining Maximum Achievable Control Technology Floors

Section 112 of the Act provides certain very specific directives to guide EPA in the process of establishing MACT standards. It states that EPA shall establish standards which require "the maximum degree of reduction in emissions of the hazardous air pollutants * * * that the Administrator, taking into consideration the cost of achieving such emission reduction, and any nonair quality health and

environmental impacts and energy requirements, determines is achievable * * *" (section 112(d)(2)). In addition, a minimum baseline or "floor" for standards is specified. For new sources, the standards for a source category or subcategory "shall not be less stringent than the emission control that is achieved in practice by the best controlled similar source, as determined by the Administrator" (section 112(d)(3)). Existing source standards shall be no less stringent than the average emission limitation achieved by the best performing 12 percent of the existing sources in the category or subcategory for categories and subcategories with 30 or more sources, or the best performing 5 sources for categories or subcategories with fewer than 30 sources (section 112(d)(3)).

In rules currently under development, EPA is considering two interpretations of the statutory language concerning the MACT floor for existing sources. One interpretation groups the words "average emission limitation achieved by" together in a single phrase and asks what is the "average emission limitation achieved by" the best performing 12 percent. This interpretation places the emphasis on "average". It would correspond to first identifying the best performing 12 percent of the existing sources, then determining the average emission limitation achieved by these sources as a group. Another interpretation groups the words "average emission limitation" into a single phrase and asks what "average emission limitation" is "achieved by" all members of the best performing 12 percent. In this case, the "average emission limitation" might be interpreted as the average reduction across the HAP emitted by an emission point over time. Under this interpretation, EPA would look at the average emission limits achieved by each of the best performing 12 percent of existing sources, and take the lowest. This interpretation would correspond to the level of control achieved by the source at the 88th percentile if all sources were ranked from the most controlled (100th percentile) to the least controlled (1st percentile).

The EPA believes that the first interpretation is appropriate and solicits comment on its interpretation of "the average emission limitation achieved by the best performing 12 percent of the existing sources" (section 112(d)(3)(A) of the Act).

The EPA is also considering two possible meanings for the word "average" as the term is used in section 112(d)(3) (A) and (B) of the Act. First, "average" could be interpreted as the arithmetic mean. The arithmetic mean of a set of measurements is the sum of the measurements divided by the number of measurements in the set. The EPA has determined that the arithmetic mean of the emissions limitations achieved by the best performing 12 percent of existing sources in some cases would yield an emission limitation that fails to correspond to the limitation achieved by any particular technology. In such cases, EPA would not select this approach. The word "average" could also be interpreted as the median emission limitation value. The median is the value in a set of measurements below and above which there are an equal number of values (when the measurements are arranged in order of magnitude). This approach identifies the emission limitation achieved by those sources within the top 12 percent, arranges those emission limitations by magnitude, and takes the control level achieved by the median source. This is mathematically equivalent to identifying the emission limitation achieved by the source at approximately the observed 94th percentile level of emission control. Either of these two approaches could be used in developing standards for different source categories. The "median" approach was used in these proposed standards.

Once the floor has been determined for new or existing sources for a category or subcategory, the Administrator must set MACT standards that are no less stringent than the floor. Such standards must then be met by all sources within the category or subcategory. However, in establishing standards, the Administrator may distinguish among classes, types, and sizes of sources within a category or subcategory (section 112(d)(1)). Thus, for example, the Administrator could establish two classes of sources within a category or subcategory based on size and establish a different emission standard for each class, provided both standards are at least as stringent as the MACT floor.

In addition, the Act provides the Administrator further flexibility to regulate area sources. Section 112(d)(5) provides that in lieu of establishing MACT standards under section 112(d), the Administrator may promulgate standards which provide for the use of "generally available control technologies or management practices." Area source standards promulgated under this authority (GACT standards) would not be subject to the MACT "floors" described above. Moreover, for source categories subject to standards promulgated under section 112(d)(5), EPA is not required to conduct a residual risk analysis under section 112(f).

D. Regulatory Approach and Regulatory Alternatives

At the end of the data gathering and analysis, EPA must decide whether it is more appropriate to follow the MACT or the GACT approach for regulating an area source category. In some cases, it may be appropriate to regulate both major and area sources in a source category under MACT. In other cases, it may be more appropriate to establish area source standards based on GACT. In the case of the proposed rulemaking for chromium electroplating and anodizing, the Administrator has decided to regulate both major and area sources by applying MACT.

The next step in establishing standards is the investigation of regulatory alternatives. With MACT standards, only alternatives at least as stringent as the floor may be considered. Information about the industry is analyzed to develop model plant populations for projecting national impacts, including HAP emission reduction levels, costs, energy, and secondary impacts. Several regulatory alternative levels (which may be different levels of emissions control or different levels of applicability or both) are then evaluated to determine the most appropriate regulatory alternative to serve as the basis for the standard.

The regulatory alternatives for new versus existing sources may be different, and separate regulatory decisions must be made for new and existing sources. For both source types, the selected alternative may be more stringent than the MACT floor. However, the control level selected must be technically achievable. In selecting a regulatory alternative, the Agency considers the achievable reduction in emissions of HAP (and possibly other pollutants that are co-controlled), the cost and economic impacts, the energy requirements, and other environmental impacts.

The selected regulatory alternative is then translated into a proposed regulation. The regulation implementing the decision typically includes sections of applicability, standards, test methods and compliance demonstration, monitoring, reporting, and recordkeeping. The preamble to the proposed regulation provides an explanation of the rationale for the decision. The public is invited to comment on the proposed regulation during the public comment period. Based on an evaluation of these

comments, EPA reaches a final decision and promulgates the standard.

III. Overview of Proposed Standards

This section provides an overview of the:

(1) Applicability of the standards;
(2) Format of the standards;
(3) Actual standards and their bases;
(4) Test methods for compliance;
(5) Monitoring requirements; and
(6) Reporting and recordkeeping requirements.

Detailed discussions concerning the statutory basis and the selection rationale for the proposed standards are provided in sections II and VI, respectively, of this preamble.

A. Applicability of the Standards

The source categories to be regulated are major and area sources of HAP emissions from facilities performing hard chromium electroplating, decorative chromium electroplating, and chromium anodizing. As noted in the initial source category list, EPA has identified as a separate source category each of the three different types of chromium electroplating and anodizing operations. In addition, EPA has listed both the major and area sources for each of these categories. Thus, this rule proposes standards for six different source categories identified in the July 16, 1992 source category list.

The specific emission units that are to be regulated within these source categories are electroplating and anodizing tanks. There are approximately 1,500 facilities with hard chromium electroplating tanks, 2,800 facilities with decorative chromium electroplating tanks, and 700 facilities with chromium anodizing tanks in the United States. Approximately 10 percent of the decorative chromium electroplating tanks use a trivalent chromium electroplating process; the remainder use a chromic acid (hexavalent chromium) electroplating process. A more detailed process description of the emission sources being regulated is provided in section V.A of this preamble.

Section 112(b) of the Act lists chromium compounds as HAP; these are the pollutants being regulated by this rulemaking. Chromic acid, a hexavalent chromium compound, is emitted in significant quantities from all hard chromium electroplating and anodizing tanks and from most decorative chromium electroplating tanks. Hexavalent chromium compounds are highly toxic and are known human carcinogens. Emissions from those decorative electroplating tanks that use trivalent chromium electroplating solutions include trivalent chromium and may include low levels of hexavalent chromium. The data on the carcinogenicity of trivalent chromium are inconclusive at this time; however, it is known that trivalent chromium can accumulate in the lungs and could potentially result in decreased lung function under extended exposure conditions.

B. Format of the Standards

The proposed standards are expressed in terms of emission limits. Specifically, a concentration format was selected for the proposed standards: Mass of total chromium emitted per unit volume of air, expressed as milligrams of chromium per dry standard cubic meter of air (mg/dscm). This format would apply to all chromium electroplating and anodizing tanks and would allow owner/operator flexibility in the selection of technologies or operational practices that achieve equivalent performance to those technologies selected as the basis of the standards. Emissions from hard chromium electroplating and anodizing tanks and those decorative chromium electroplating tanks using a chromic acid electroplating process are comprised of hexavalent chromium. Emissions from decorative chromium electroplating tanks that use a trivalent electroplating process are comprised primarily of trivalent chromium, with low levels of hexavalent chromium possibly present.

An alternative format to reduce emissions is proposed for decorative chromium electroplating tanks and chromium anodizing tanks that use fume suppressants. Such tanks do not typically have ventilation systems; emission testing to determine compliance at these tanks would not be possible (see discussion in section VI.D). The emission limits for decorative chromium electroplating tanks and chromium anodizing tanks using fume suppressants are expressed in terms of concentration and are based on emission tests performed at sources with ventilation. Another parameter, surface tension, has been measured in conjunction with the emission rate from tanks using wetting-agent-type fume suppressants, and EPA has found that a relationship between surface tension and total chromium emission rates exists. Therefore, the Administrator is proposing that those tanks that use wetting-agent-type fume suppressants (or a wetting agent plus foam blanket) comply with a surface tension requirement rather than the emission limit.

C. Actual Standards and Their Bases

In the proposed rulemaking, standards have been established for major and area sources in each category and subcategory identified for regulation. The Agency's study has indicated that the majority of the sources in each category and subcategory would be area sources, emitting less than 9.1 Mg/yr (10 tons/yr) of any one HAP or 22.7 Mg/yr (25 tons/yr) of multiple HAP by themselves. Some sources are considered major because they are located within the fenceline of a source that is major. However, the appropriate control technology is not a function of whether the source is a major or area source. Thus, the standards identified in this section would apply both to major and area sources in each category and subcategory.

The Administrator has determined that different standards are appropriate for new sources as compared to existing sources; this decision is, in part, based on the MACT floor requirements explained in section II.C. The Administrator has also determined that for existing sources in the hard chromium electroplating category, different standards are suitable based on the size of the facility. A less stringent standard is proposed for small facilities in this source category. The size designations identified for this source category are independent of the major and area source designation.

A summary of the total chromium emission limits for each of the categories and subcategories is provided in Table 1.

TABLE 1.—NEW AND EXISTING SOURCES—BASIS OF THE STANDARD (TOTAL CHROMIUM EMISSION LIMIT)

	Hard chromium electroplating	
	Small	Large
New	CMP[a]: (0.013 mg/dscm [5.7x10^{-6} gr/dscf])	CMP: (0.013 mg/dscm [5.7x10^{-6} gr/dscf]).

TABLE 1.—NEW AND EXISTING SOURCES—BASIS OF THE STANDARD (TOTAL CHROMIUM EMISSION LIMIT)—Continued

	Hard chromium electroplating	
	Small	Large
Existing	PBS[b]: (0.03 mg/dscm [1.3×10^{-5} gr/dscf])	CMP: (0.013 mg/dscm [5.7×10^{-6} gr/dscf]).
	Decorative chromium (chromic acid bath); all sizes of operations:	
New and existing	FS[c]:(40 dynes/cm [2.7×10^{-3} lb_f/ft]) or (0.003 mg/dscm [1.3×10^{-6} gr/dscf]).	
	Decorative chromium (trivalent chromium bath); all sizes of operations:	
New and existing	TVC[d]: (no action) (55 dynes/cm [3.8×10^{-3} lb_f/ft]) or (0.048 mg/dscm [2.1×10^{-5} gr/dscf]).	
	Chromium anodizing; all sizes of operations:	
New and existing	FS: (40 dynes/cm [2.7×10^{-3} lb_f/ft]) or (0.003 mg/dscm [1.3×10^{-6} gr/dscf]).	

[a] CMP=Composite mesh pad.
[b] PBS=Packed-bed scrubber.
[c] FS=Chemical fume suppressant.
[d] TVS=Trivalent chromium plating process.

1. Hard Chromium Electroplating Tanks

a. *New Tanks.* All new hard chromium electroplating tanks, regardless of size, would be required to meet a total chromium emission limit of 0.013 mg/dscm (5.7×10^{-6} grain per dry standard cubic foot [gr/dscf]). This emission limit is based on the use of a composite mesh-pad system. Composite mesh-pad systems have been demonstrated to achieve an outlet total chromium concentration of 0.013 mg/dscm (5.7×10^{-6} gr/dscf).

b. *Existing Tanks.* The emission limits for existing hard chromium electroplating tanks that are presented in the following paragraphs differ depending on the size of the facility. Facilities with maximum cumulative potential rectifier capacities less than 60 million Ah/yr are considered small. Other facilities are considered large. A discussion of the calculation of maximum potential rectifier capacity is provided in section VI.A of this preamble.

All existing hard chromium electroplating tanks at large facilities would be required to meet a total chromium emission limit of 0.013 mg/dscm (5.7×10^{-6} gr/dscf), which is based on the composite mesh-pad system.

All existing hard chromium electroplating tanks at small facilities would be required to meet a total chromium emission limit of 0.03 mg/dscm (1.3×10^{-5} gr/dscf). This emission limit is based on the use of a well-maintained and well-operated packed-bed scrubber.

2. Decorative Chromium Electroplating Tanks Using a Chromic Acid Bath

All new and existing decorative chromium electroplating tanks that use a chromic acid electroplating process, regardless of size, would be required to: (1) Meet a total chromium emission limit of 0.003 mg/dscm (1.3×10^{-6} gr/dscf) if an air pollution control device is the sole means to control chromium emissions; or (2) use a wetting-agent-type fume suppressant in the electroplating bath and maintain a bath surface tension no greater than 40 dynes per centimeter (dynes/cm) (2.7×10^{-3} pound force per foot [lb_f/ft]). Chemical fume suppressants in the form of wetting agents, used either alone or with a foam blanket, are expected to achieve outlet concentrations of 0.003 mg/dscm (1.3×10^{-6} gr/dscf) when used in accordance with vendor recommendations.

3. Decorative Chromium Electroplating Tanks Using a Trivalent Chromium Bath

Emission tests conducted on a trivalent chromium electroplating tank indicated that the total chromium outlet concentration from such a bath is 0.048 mg/dscm (2.1×10^{-5} gr/dscf). The maximum value of bath surface tension measured during the test was 55 dynes/cm (3.8×10^{-3} lb_f/ft). Because surface tension is related to emissions, the proposed standard requires that this value not be exceeded. Surface tension monitoring is required to minimize the potential that any new process developments for trivalent chromium baths would result in an increase in emissions from the process. If an air pollution control device is the sole means of controlling chromium emissions, facilities must meet a total chromium emission limit of 0.048 mg/dscm (2.1×10^{-5} gr/dscf).

4. Chromium Anodizing Tanks

All new and existing chromium anodizing tanks, regardless of size, would be required to meet a total chromium emission limit of 0.003 mg/dscm (1.3×10^{-6} gr/dscf) (if an air pollution device is the sole means of controlling chromium emissions) or maintain a surface tension no greater than 40 dynes/cm (2.7×10^{-3} lb_f/ft) (if wetting agents are used to control chromium emissions).

5. Compliance Schedule

Owners or operators of existing hard chromium electroplating tanks would be required to comply with the proposed standards within 1 year after the effective date of the standards. In accordance with proposed § 63.7(a), the owner or operator would then have 120 days after the compliance date to conduct a performance test.[1] These time periods are necessary to allow the estimated 60 percent of those facilities with tanks currently operating uncontrolled, or with less effective air pollution control devices than those required under the standards, to obtain, install, and test appropriate control systems. The EPA believes this amount of time is adequate and that a longer time is neither necessary nor desirable

[1] The EPA proposed regulations for subpart A of 40 CFR part 63 published in the Federal Register on August 11, 1993 at 58 FR 42760.

given the highly toxic nature of chromium emissions and the proximity of these operations to highly populated areas.

The owner or operator of an existing decorative chromium or chromium anodizing tank would have 3 months to comply after the effective date. A shorter time period is appropriate for these tanks because fume suppressants already are widely used, a large number of vendors supply chemical fume suppressants, and no installation of equipment is needed to comply with the standards.

Owners or operators of new hard chromium or decorative chromium electroplating or anodizing tanks that commence construction or reconstruction after the standards are proposed, and before the final standards are promulgated, would have to comply immediately upon startup unless the promulgated standards are more stringent than the proposed standards. In accordance with § 63.7(a)(2)(ix), if the promulgated standards are more stringent than the proposed standards, the compliance date for tanks built after proposal but before promulgation would be 1 year after the effective date.[2] The owner or operator would have to comply with the standard as proposed until the compliance date. The owner or operator would then be required to conduct a performance test within 120 days after the compliance date.

The owner or operator of any hard chromium or decorative chromium electroplating or anodizing tank constructed after the effective date of the standards would be required to comply immediately upon startup.

6. Early Reduction Program

An early reduction program for existing sources is set out in section 112(i)(5) of the Act. This is a voluntary program that allows an emission source to qualify for a 6-year extension from the compliance date to comply with the promulgated standard, provided it meets and demonstrates all the program requirements. Those requirements are: (1) The source must achieve a 90 percent or greater reduction in HAP emissions (95 percent for particulate matter); (2) an enforceable commitment for this reduction is made to EPA; (3) the emission reduction must be achieved before the standard's proposal, unless the source qualifies for and makes an enforceable commitment for this reduction before the proposal date that states the reduction will be achieved after proposal but before January 1, 1994; and (4) the early emission reduction must be determined through a comparison of the reduced emissions levels achieved with the baseline levels in existence no earlier than 1987 (unless data were submitted in response to a Section 114 request and received by the Administrator before November 15, 1990; in which case, 1985 or 1986 baseline data can be used). The early reduction program implementing section 112(i)(5) was promulgated on December 29, 1992 (57 FR 61970). The EPA has explained the early reduction program to affected industry sources and expects some sources to participate in the program. Those most likely to participate would be those that have recently installed effective control measures.

D. Test Methods for Compliance

Test Methods 306 and 306A, "Determination of Chromium Emissions from Decorative and Hard Chromium Electroplating and Anodizing Operations," are the proposed methods for determining compliance with the emission standards. Test Method 306B, "Surface Tension Measurement and Recordkeeping for Tanks used at Chromium Electroplating and Anodizing Facilities," is the proposed method for monitoring surface tension at decorative chromium electroplating and chromic acid anodizing facilities.

E. Monitoring Requirements

Two types of monitoring would be required by this standard: Compliance monitoring and operation and maintenance (O&M) monitoring. Compliance monitoring would be conducted to ensure ongoing compliance with the emission limit. Operation and maintenance monitoring would be required to ensure that the affected source and its emission control system is properly maintained and operated to minimize emissions.

1. Compliance Monitoring

All owners or operators that use an air pollution control device to demonstrate compliance with the specified chromium emission limits would be required by the proposed standards to conduct an initial performance test, in accordance with the requirements of § 63.7.[3] During the performance test, the owner or operator would establish values for operating parameters to be monitored to ensure continued compliance with the standard. This section identifies the parameters to be monitored and the frequency of monitoring. The procedures for monitoring are outlined in § 63.345 of the proposed regulation.

An owner or operator who uses an air pollution control device to comply with the emission limits would be required to monitor and record once each day the gas velocity of the inlet stream to the control device. The value or range of values of gas velocity that correspond to compliance with the emission limit would be established by the owner or operator during the initial performance test. If a packed-bed scrubber is used to comply with the standard, the owner or operator would also be required to measure once each day, using a hydrometer, the concentration of chromic acid in the scrubber water. Gas velocity and scrubber water concentration (for packed-bed scrubbers) have been identified by the Agency as the site-specific operating parameters that would determine compliance or noncompliance with the regulation. Should the gas velocity be outside of the range established during the performance test (i.e., either higher or lower than the pre-established value or range of values) or should the scrubber water concentration exceed 45 grams per liter (g/L) (6 ounces per gallon (oz/gal), the owner or operator would be in noncompliance with the emission limit.

As an alternative to the above requirements, an owner or operator who uses an air pollution control device in conjunction with fume suppressants to control emissions from a decorative chromium or chromium anodizing operation may monitor surface tension of the electroplating bath to demonstrate ongoing compliance (gas velocity and scrubber water concentration would not have to be monitored). The maximum value for surface tension may be determined by the owner or operator during the initial performance test, or the owner or operator may adhere to the surface tension limits set by this standard. (If the surface tension limits set by this standard are used to indicate compliance, an initial performance test would not be required.) The owner or operator would be required to measure and record the surface tension of the bath using a stalagmometer or a tensiometer at least once every 4 hours during operation of the tank. Operation of the electroplating tank at surface tensions above the acceptable value would constitute noncompliance with the standard.

An owner or operator of a tank that uses a wetting-agent-type fume suppressant or a combination wetting-agent/foam-blanket-type suppressant to comply with the standard would be required to measure and record the

[2] Ibid.

[3] Ibid.

surface tension of the bath using a stalagmometer or a tensiometer at least once every 4 hours during operation of the tank. Operation of the electroplating tank at surface tensions above the acceptable value would constitute noncompliance with the standard.

An owner or operator of a tank that uses a foam blanket alone to comply with the standard would be required to conduct an initial performance test to confirm that the emission limit of 0.003 mg/dscm (1.3×10^{-6} gr/dscf) is being met. For ongoing compliance, the owner or operator would be required to maintain the foam blanket thickness at 2.5 centimeters (cm) (1 inch (in.)), and measure and record the foam blanket thickness at least once every hour during operation of the tank. Operation of the electroplating tank at a foam blanket thickness below the acceptable value would constitute noncompliance with the standard.

An owner or operator of a trivalent chromium electroplating tank would be required by the standard to monitor the surface tension using a stalagmometer or tensiometer every 4 hours. Operation of the electroplating tank at surface tensions above the acceptable value would constitute noncompliance with the standard.

2. Operation and Maintenance Monitoring

To ensure proper operation of the air pollution control device, the proposed standards require the owner or operator to prepare an operation and maintenance plan for the device. The plan would be incorporated into the startup, shutdown, malfunction plan required by § 63.6(e),[4] and would include a standardized checklist to document the operation and maintenance of the equipment, a systematic procedure for identifying malfunctions and for reporting them to supervisory personnel, and procedures to be followed to ensure that equipment or process malfunctions due to poor maintenance or other preventable conditions do not occur.

As an indication of good maintenance procedures, the owner or operator would be required to record once each day the performance of washdown of the packed bed or mesh pad and to measure and record the pressure drop across the device. As with the gas velocity, the acceptable pressure drop range would be established by the owner or operator during the initial performance test. Unlike gas velocity and scrubber water concentration, the pressure drop readings would be used only as an indication of adherence to the operation and maintenance plan. Operation outside of the pre-established pressure drop range would not alone indicate noncompliance with the emission limit.

F. Reporting and Recordkeeping Requirements

The owner or operator of any tank subject to these standards would be required to fulfill the reporting and recordkeeping requirements outlined in § 63.10(e)(3)(v).[5] These requirements include those associated with startup, shutdown, or malfunctions; operation and maintenance records; compliance monitoring system records; performance test reporting; quarterly reports of no excess emissions for a year and semi-annual reporting subsequently, if there are no excess emissions; and quarterly reports of exceedances of the emission limits. The owner or operator of any tank subject to these standards would be required to submit quarterly reports of any exceedances of monitored operating parameter values required under this subpart. These quarterly reports must contain the monitored operating parameter value readings for the periods constituting exceedances, and a description and timing of steps taken to address the cause of the exceedances.

In addition to the above requirements, the owner or operator of a tank that uses an add-on air pollution control device to meet an emission standard would also be required to maintain records of daily and monthly inspections, daily gas velocity readings, daily washdowns, daily pressure drop readings, and any emission tests at the facility. Facilities using packed-bed scrubbers to comply with the standards would also be required to maintain records of daily scrubber water concentrations. All records must be maintained for a minimum of 5 years. Each inspection record would identify the device inspected and include the following (see further discussion in section VI.I): the date and approximate time of inspection, a brief description of the working condition of the device during the inspection, the gas velocity, the scrubber water concentration (if applicable), the pressure drop, and any actions taken to correct deficiencies found during the inspection. Each record of washdown would identify the device and include the date, approximate time, and duration of the washdown.

An owner or operator of a tank that uses a fume suppressant or foam blanket to comply with the standard would be required to maintain the following records at the facility for at least 5 years: the amounts of fume suppressants purchased (invoices); the surface tension or foam blanket thickness measurements; the frequency of maintenance additions; the amount of material added during each maintenance addition; the surface tension of the bath; measurements of foam blanket thickness; and any emission tests to assure compliance with the standard. Each record of a surface tension measurement would identify the tank and include the date, approximate time, measured surface tension, and whether any additions were made to the bath. Each record of a foam blanket thickness measurement would identify the tank and include the date, approximate time, measured thickness, and whether any additions were made to the bath. If an addition was made, the amount of material added would also be recorded.

An owner or operator of a tank that uses a trivalent chromium electroplating process would be required to maintain at the facility for at least 5 years records of the surface tension measurements; the amount of bath additive (containing fume suppressant) that is purchased (invoices); and any emission tests conducted. Each record of a surface tension measurement would identify the tank and include the date, approximate time, and measured surface tension.

IV. Impacts of the Standards

The nationwide impacts presented below are the impacts the proposed standards would have on existing facilities in each category or subcategory identified. No net growth is projected for the source categories covered by these standards although new facilities may be constructed to replace existing, obsolete facilities. Because no information is available for projecting numbers of new facilities or electroplating tanks, nationwide impacts beyond baseline are presented here for existing facilities only. For informational purposes, model plant impacts are presented for new facilities in section VI.C.4. More detailed discussion on how these impacts were calculated can be found in section V.I.C of this preamble, Chapters 6 through 8 of the BID, and in the New Technology Document (see ADDRESSES section).

A. Hard Chromium Electroplating Tanks

Existing hard chromium electroplating tanks at facilities with maximum cumulative potential rectifier capacities greater than or equal to 60 million Ah/yr (large facilities) would be required to meet a total chromium

[4] Ibid.

[5] Ibid.

emission limit of 0.013 mg/dscm (5.7×10^{-6} gr/dscf), which is based on the application of composite mesh pads. The aggregated nationwide emission reduction from baseline which would be achieved by these sources would be approximately 126 megagrams per year (Mg/yr) (139 tons per year (tons/yr)). Nationwide aggregated annual costs beyond baseline would be approximately $17 million.

Existing hard chromium electroplating tanks at facilities with maximum cumulative potential rectifier capacities less than 60 million Ah/yr (small facilities) would be required to meet a total chromium emission limit of 0.03 mg/dscm (1.3×10^{-5} gr/dscf), which is based on the application of packed-bed scrubbers. The aggregated nationwide emission reduction from baseline which would be achieved by these sources would be approximately 18 Mg/yr (20 tons/yr). Nationwide aggregated annual costs beyond baseline would be approximately $5 million.

The total emission reduction for the hard chromium electroplating source category would be 144 Mg/yr (159 tons/yr) with an associated total annual cost for control of $22 million. The total annual reporting and recordkeeping costs of the proposed standards would be approximately $8.6 million.

The annual cost for control would increase the electroplating cost for hard-chromium-plated products. It is assumed that the majority of these costs can be passed on to the customer because the capital investment the customer has in the part, in most cases, far outweighs the increased electroplating cost. In addition, the actual product price increase resulting from compliance with the emission standard would be less than 1 percent of the current product price. The relatively minor effect on end product price results because, most often, hard chromium electroplating is not performed on an entire end product. Instead, electroplating is performed on components (e.g., hydraulic cylinders) of the end product (e.g., backhoe), and the cost increase for this service (that would result from compliance with the standard) is small compared to the price of the end product. It is conservatively estimated that fewer than 30 facilities with hard chromium electroplating tanks, or less than 2 percent of the industry (largely those that are presently uncontrolled), would close because of their inability to absorb the cost of meeting the standard.

The nationwide aggregate energy impact (mainly for additional fan horsepower) beyond baseline would be approximately 102,900 megawatt hours per year (MWh/yr) for large facilities and 6,300 MWh/yr for small facilities. The nationwide solid waste impact beyond baseline from the periodic disposal of packing material would be 130 cubic meters per year (m^3/yr) (4,590 cubic feet per year (ft^3/yr)) for large facilities and 26 m^3/yr (910 ft^3/yr) for small facilities.

The use of composite mesh-pads and packed-bed scrubbers results in the generation of wastewater requiring reuse, treatment, or disposal. However, it is assumed that all wastewater would eventually be drained to the electroplating tanks to make up for evaporative losses, as is the current industry practice. Thus, no wastewater impacts would be associated with this standard. If, for some reason, the wastewater were not recycled, it would need to be treated and disposed of in accordance with requirements under the Resource Conservation and Recovery Act.

B. Decorative Chromium Electroplating Tanks

Existing decorative chromium electroplating tanks using a chromic acid bath would be required to meet a total chromium emission limit of 0.003 mg/dscm (1.3×10^{-6} gr/dscf) if an air pollution control device is the sole means of controlling emissions or use wetting-agent-type fume suppressants and maintain a surface tension of less than 40 dynes/cm (2.7×10^{-3} lb_f/ft). Impacts are estimated based on the use of chemical fume suppressants. The aggregate nationwide impact of the standards on decorative chromium electroplaters using chromic acid baths is estimated to be 10 Mg/yr (11 tons/yr) in emission reductions. No additional cost of control beyond that incurred at baseline would accrue because there are no capital costs associated with chemical fume suppressants. (The costs projected for baseline conditions result from the assumption that 42 percent of the facilities will elect to use packed-bed scrubbers in conjunction with fume suppressants.) (See further discussion in section VI.C.) The total annual reporting and recordkeeping costs of the proposed standards would be approximately $14 million. No closures are anticipated as a result of compliance because there is no additional cost of control. No energy or solid waste impacts are attributable to the use of chemical fume suppressants.

There are no control requirements in this proposed rulemaking for existing decorative chromium electroplating tanks using a trivalent chromium electroplating process. Therefore, there are no cost, economic, energy, or solid waste impacts. These facilities would be required to maintain a surface tension of the electroplating bath of 55 dynes/cm (3.8×10^{-3} lb_f/ft) or to meet a total chromium emission limit of 0.048 mg/dscm (2.1×10^{-5} gr/dscf). The total annual reporting and recordkeeping costs of the proposed standards would be approximately $1.6 million.

C. Chromium Anodizing Tanks

Existing chromium anodizing tanks would be required to meet an emission limit of 0.003 mg/dscm (1.3×10^{-6} gr/dscf) or maintain a surface tension of less than 40 dynes/cm (2.7×10^{-3} lb_f/ft). This is based on the use of chemical fume suppressants. The nationwide aggregate emission reduction beyond baseline would be 4 Mg/yr (4.4 tons/yr). As with decorative chromium electroplating facilities using a chromic acid electroplating process, there would be no nationwide cost impact beyond baseline. No closures are anticipated as a result of compliance with the proposed standards because there is no additional cost of control. There are also no energy or solid waste impacts attributable to the use of chemical fume suppressants. The total annual reporting and recordkeeping costs of the proposed standards would be approximately $3.8 million.

V. Process Description and Description of Control Technologies

This section describes the chromium electroplating and anodizing processes and the technologies that can be used to control chromium emissions from these processes. This section is provided to supplement the rationale for selection of the proposed standards presented in section VI. For more detailed process and control technology descriptions, consult the BID for the proposed standards (see **ADDRESSES**) and the New Technology Document (see **ADDRESSES**).

A. Process Descriptions

The source categories that would be regulated by this standard are those performing hard chromium electroplating, decorative chromium electroplating, and chromium anodizing. (Area and major sources of each would be regulated for a total of six source categories.) The specific emission sources that would be regulated are the electroplating and anodizing tanks. Three distinct processes can be performed in these tanks: chromic acid electroplating, trivalent chromium electroplating, and chromium anodizing. Each process is described below.

1. Chromic Acid Electroplating

Chromic acid electroplating is the most widely used procedure for depositing chromium on metal. Chromium anhydride (CrO_3), commonly referred to in the industry as chromic acid, is the hexavalent chromium compound used to formulate the electroplating bath. Chromic acid electroplating baths typically contain approximately 240 g/L (32 oz/gal) of chromic acid and 2.4 g/L (0.32 oz/gal) of sulfuric acid, which acts as a bath catalyst.

Emissions of hexavalent chromium from the electrodeposition of chromium in chromic acid electroplating baths occur primarily because of the inefficiency of the chromic acid electroplating process. Eighty to 90 percent of the electrical current applied is consumed by the evolution of oxygen and hydrogen gases at the electrodes. As the bubbles burst at the surface of the electroplating solution, a fine chromic acid mist is formed. The rate of mist formation is a function of the chemical or electrochemical activity in the tank and increases directly with the amount of current (amperage) applied to the tank, which is determined by the amount and type of parts plated or surface area plated in the tank and the current densities needed to effectively plate the parts.

In hard chromium electroplating, a relatively thick layer of chromium is deposited directly on a base metal (usually steel) to provide functional or engineering characteristics such as hardness, a low coefficient of friction, and wear and corrosion resistance. Hard chromium electroplating is used for items such as hydraulic cylinders and rods, industrial rolls, zinc die castings, plastic molds, engine components, and marine hardware. Current densities for hard chromium electroplating tanks range from 1,600 to 6,500 amperes per square meter of surface area plated (A/m^2) (150 to 600 amperes per square foot [A/ft^2]). Electroplating times range from one-half hour to 36 hours, and electroplating thicknesses range from a few to several hundred microns (µm).

In decorative chromium electroplating, the base material (e.g., brass, steel, aluminum, or plastic) generally is plated with layers of copper and nickel followed by a relatively thin layer of chromium to provide a bright surface with wear and tarnish resistance. Decorative chromium electroplating is used for items such as automotive trim, metal furniture, bicycles, hand tools, and plumbing fixtures. Current densities for decorative chromium electroplating tanks range from 540 to 2,400 A/m^2 of surface area plated (50 to 220 A/ft^2). Electroplating times range from less than 1 minute to 5 minutes, and electroplating thicknesses range from 0.003 to 2.5 µm (0.0001 to 0.1 mil).

Hard chromium electroplating tanks emit significantly more chromic acid emissions than decorative chromium electroplating tanks because of the higher current densities and longer electroplating times required to achieve the desired plate thickness. Emissions from both hard chromium and decorative chromium electroplating are comprised almost entirely of hexavalent chromium because a chromic acid electroplating process is used.

2. Trivalent Chromium Electroplating

Trivalent chromium processes are used at less than 10 percent of the 2,800 facilities with decorative chromium electroplating tanks. This process is not used for hard chromium electroplating because the trivalent chromium process, as currently formulated, cannot achieve the full range of plate thicknesses necessary for most hard chromium electroplating applications.

Trivalent chromium processes are applicable for the full range of decorative chromium electroplating applications. However, because the process is relatively new, it does not have widespread use. Also, special precautions must be taken when a trivalent chromium process is used for electroplating brass, zinc, and tubular (hollow) steel parts. If there is insufficient coverage of nickel on the part, the exposed base metals may dissolve in the trivalent chromium electroplating solution, resulting in contamination of the bath. Contamination problems can be overcome through the application of a thicker layer of nickel, the use of ion exchange columns to purify the bath, and several other methods. At present, there are several trivalent chromium tanks at which these types of parts are successfully plated.

Two types of trivalent chromium processes are commercially available: The single-cell and the double-cell. The single-cell process is a halogen-based system using graphite anodes and additives to prevent oxidation of trivalent chromium at the anode. In this system, the anodes are in direct contact with the electroplating solution. The double-cell process is a sulfate-based system in which lead anodes are encased in boxes that are lined with a permeable (ion-selective) membrane and that contain a dilute solution of sulfuric acid. This system eliminates contact and oxidation of the trivalent chromium electrolyte at the anode. The double-cell process requires fewer additives.

The main difference between the trivalent chromium processes and chromic acid electroplating processes is in the chromium electroplating step. The electroplating bath chemistry is different for trivalent baths; the bath is comprised mostly of trivalent chromium with hexavalent chromium considered as a bath contaminant. Trivalent chromium electroplating solutions typically contain between 22 to 30 g/L (3 to 4 oz/gal) of trivalent chromium. The exact compositions of trivalent chromium electroplating solutions are proprietary. The process lines for trivalent chromium electroplating processes also differ from those used with a chromic acid electroplating bath. For example, additional rinse tanks or post dips are added to the electroplating line in the trivalent chromium electroplating processes.

Tests indicate that emissions from trivalent chromium tanks have total chromium concentrations of 0.048 mg/dscm (2.1×10^{-5} gr/dscf) and hexavalent chromium emissions of 0.004 mg/dscm (1.75×10^{-6} gr/dscf). Additional advantages of using a trivalent chromium bath, from a pollution prevention standpoint, are discussed in section V.B.5.

3. Chromium Anodizing

In the chromium anodizing process, chromic acid is used to form an oxide layer on aluminum that provides corrosion resistance. The chromium anodizing process is used primarily to coat aircraft parts and architectural structures that are subject to high stress and corrosive conditions. The Department of Defense (Naval Air Systems Command) is conducting research on alternatives to chromic acid anodizing for military aircraft. This research focuses on the use of a sulfuric/boric acid anodizing process. If the research results impact the current rulemaking, they will be made available for comment.

The chromic acid concentration in anodizing baths is approximately 50 to 100 g/L (7 to 13 oz/gal). The current densities applied range from 1,550 to 7,750 A/m^2 (144 to 720 A/ft^2) of surface area anodized. The anodizing time ranges from one-half to 1 hour. The anodizing process is a voltage-controlled process. Voltage is applied step-wise (in 5 V increments per minute) from 0 to 20 or 40 V and maintained at the desired voltage for the remainder of the anodizing period. When current is applied, chromic acid breaks down in the anodizing bath resulting in the liberation of oxygen and

hydrogen. The oxygen evolves at the surface of the aluminum part where it reacts with the substrate to form an aluminum oxide layer. At the same time, chromic and dichromic acids contained in the bath react with the aluminum oxide film in a dissolving action, which results in the formation of very fine pores that enhance the continuation of current flow to the metal surface. About half of the oxidized aluminum is retained as anodic film, and the remainder goes into solution to form alumina-chromic acid compounds. The liberation of hydrogen and oxygen gas results in the formation of a fine chromic acid mist at the surface of the anodizing solution. Misting is more pronounced at the beginning of the anodizing cycle when there is minimal resistance to current flow. As the oxide film develops on the surface of the part, the resistance to current flow is higher, and less mist is formed.

B. Description of Control Techniques

This section presents descriptions of the techniques typically used to control emissions of chromic acid mist from chromium electroplating and anodizing tanks. All of these control technologies are effective regardless of the size of the operation. In particular, the use of a given technology is not a function of whether a source is considered major or area. A more complete description of these control technologies is presented in the BID for the proposed standards (see **ADDRESSES**) and in the New Technology Report (see **ADDRESSES**). Control technologies (e.g., chevron-blade mist eliminators) that were considered less stringent than the MACT floor are not included in the following discussion. However, information on less-stringent control technologies is presented in the BID for the proposed standards.

The discussions below present information concerning the achievable emission levels and percent reductions (efficiencies) for the various demonstrated control measures. Percent reduction provides a convenient basis on which to compare various control techniques. Percent reduction is determined from the control device inlet and outlet mass emission rates. However, the available test data strongly indicate that outlet chromium concentrations within each class of control device type are relatively constant and are not influenced by the inlet chromium concentration to the control device. Thus, the "control efficiency" actually achieved by a given control device would vary depending on inlet loading. For this reason, the level of control assigned to each control technique in the discussion below is based on the percent reduction achievable by well-maintained units at representative inlet loadings (refer to chapters 4 and 5 of the BID) and is used here only for the purpose of estimating emission reduction impacts associated with alternative control techniques.

1. Packed-Bed Scrubbers

Packed-bed scrubbers are typically used by hard and decorative chromium electroplating and chromic acid anodizing tanks to control emissions of chromic acid mist. Both single and double packed-bed designs are used. Chromic acid mist is removed from the gas stream primarily by impaction of droplets on packing media.

First, the gas stream is wetted by spraying water countercurrent to the gas flow to enlarge the droplet size. The gas stream then passes through the packed bed(s) where the droplets impinge on the packing media. The packing media used to control chromic acid mist typically are made of polypropylene and are configured to have a high surface-area-to-volume ratio. Packing depth is typically about 0.3 to 0.6 m (1 to 2 ft). In most cases, the packed-bed section of the scrubber is followed by a mist eliminator section comprised of a single chevron-blade mist eliminator. The mist eliminator removes any water entrained from the packed-bed section. Treated gases then pass through an induced draft fan and out a stack or exhaust vent. The scrubber water is usually recirculated and periodically tapped and discharged to the electroplating tanks as makeup solution.

The operating parameters that most greatly affect the performance of packed-bed scrubbers include the gas velocity entering the packed bed and the liquid-to-gas ratio. Removal of chromic acid mist is accomplished by reducing the velocity of the gas stream in an expansion chamber at the inlet of the scrubber. The velocity must be maintained at a rate such that the droplets possess sufficient energy to collide with the packing media. Operation of packed-bed units at greater than the design gas velocity will decrease gravitational settling of chromic acid droplets upstream of the packed bed. An increase of the gas velocity above optimal levels will also cause reentrainment of chromic acid droplets from the packed bed and contribute to an overall decrease in collection efficiency. If the liquid-to-gas ratio is too high, the packed bed will become flooded and the gas flow will be restricted. A liquid-to-gas ratio that is too low will result in insufficient wetting of the packed bed, leaving portions of the bed dry. This inhibits interception of particles by the fluid boundaries on the packing material. Also, the inlet gas stream will not be wetted enough to allow enlargement of the chromic acid droplets. Therefore, a liquid-to-gas ratio that is too low will result in lower collection efficiencies.

Other factors that affect performance include the surface contact area and distribution of the packing media. Inadequate surface contact area results in less impingement and, thus, less removal of chromic acid mist. Nonuniform distribution or settling of the packing media in its frame results in channeling or bypass, which adversely affects scrubber performance. Also, plugging of the spray nozzles used for packing media washdown can result in excessive buildup of chromic acid on the packing media leading to reentrainment or plugging of the bed.

Two independent studies were conducted by the Agency to determine the effects of: (1) Chromic acid concentrations in the scrubber water; and (2) overhead washdown on scrubber performance. The results of the recirculation study indicate that the chromic acid concentration of the scrubber water does not significantly affect scrubber performance. However, a slight increase in emissions was noted at scrubber water concentrations above 45 g/L (6 oz/gal). Therefore, the Agency is requiring that chromic acid concentrations in the scrubber be maintained below 45 g/L (6 oz/gal). Most plants typically have scrubber water concentrations less than 15 g/L (2 oz/gal). Results from the washdown study indicated that periodic flooding of the packed bed with clean water helps to clean packing media and prevent degradation in the performance of the unit. However, continuous washdown of the packing media does not significantly improve performance beyond that achieved with periodic washdown. Emission test results also suggest that double packed-bed designs do not improve the performance level beyond that achieved with single packed-bed designs. The EPA requests comments on the appropriateness of the scrubber water concentration value or any data to indicate the significance of increase in chromium emissions relative to the scrubber water concentration.

As discussed previously, the inlet loading to packed-bed scrubbers does not affect the outlet concentration achieved; therefore, the percent reduction achieved by the control device is dependent upon the inlet concentration level. Hard chromium electroplating tanks typically have high inlet concentrations (above

approximately 3 mg/dscm [0.001 gr/dscf]). Decorative chromium electroplating and anodizing tanks, which operate with lower current densities, produce lower emissions, about one-third that encountered at representative hard chromium electroplating tanks.

Control device vendors estimate that removal efficiencies for packed-bed scrubbers range from 95 to 99 percent. The control efficiencies achieved by existing chromium electroplating and anodizing tanks using packed-bed scrubbers are often on the low end of this range because of the less-than-optimum operating and maintenance practices prevalent in the industry. Based on data obtained during EPA's emission test program, packed-bed scrubbers with periodic washdown can achieve outlet hexavalent chromium concentrations of 0.03 mg/dscm (1.3×10^{-5} gr/dscf). Assuming performance of the control device at proper conditions, a 99 percent control efficiency for packed-bed scrubbers is achievable at the higher inlet concentrations typically found in hard chromium electroplating tanks; 97 percent efficiency is achievable at the lower inlet concentrations found at decorative chromium electroplating and anodizing tanks.

Operating costs for packed-bed scrubbers depend on unit size. The size is a function of the airflow rate, which is determined by the surface area and configuration of the electroplating or anodizing tank(s).

2. Composite Mesh-Pads

Composite mesh-pads consist of layers of interlocked fibers densely packed between two supporting grids. The composite mesh pad was developed to remove small particles (<5 μm [0.2 mils]) that were not effectively controlled by conventional technologies. The layers of material in composite pads are arranged with the smallest diameter fiber layer located in the center of the pad and progressively larger diameter layers located on both sides of the center. The fiber diameters used in these pads range from 0.005 to 0.08 cm [2 to 32 mils]). Particles larger than 1 μm (0.025 mil), traveling with sufficient velocity, collide with the fibers in the first portion of the pad and adhere to their surfaces. These captured particles coalesce into larger droplets as they travel through the small-diameter fiber layers in the center of the pad. These enlarged particles either drain to the bottom of the unit or are reentrained in the gas stream. The reentrained particles are then captured by the large-diameter fiber layers in the back of the pad.

Factors that affect the performance of mesh-pad mist eliminators include the pad cleaning frequency, the velocity of the gas stream, and the particle size of the entrained pollutant. Pad cleaning frequency is related to the tendency of mesh pads to plug if chromic acid is allowed to build up on the pad material. The mesh pads should be washed down with water at least daily to reduce the chance of plugging.

Gas stream velocity and particle size affect performance because as velocity increases, collection of particles through the mechanism of inertial impaction increases. Thus, gas velocities that are too low can result in reduced performance. However, gas velocities that are too high also can reduce performance because particles may become reentrained in the gas stream.

Based on emission test results, a composite mesh-pad system can achieve outlet hexavalent chromium concentrations of 0.013 mg/dscm (5.7×10^{-6} gr/dscf). At representative inlet loadings, the percent reduction achieved by a composite mesh-pad system is greater than 99.5 percent at the higher inlet loadings typical for a hard chromium electroplating operation.

Operating costs for composite mesh-pad systems depend on the size and the type of control equipment that is used in conjunction with the composite pads (e.g., packed-bed scrubbers or a series of mesh pads). The size of the unit is a function of the airflow rate, which is determined by the surface area and configuration of the electroplating or anodizing tank(s).

3. Fiber-Bed Mist Eliminators

Fiber-bed mist eliminators have been used predominantly to control acid mists from sulfuric, phosphoric, and nitric acid plants. One system, however, is known to be in place to control chromium emissions from electroplating tanks. Fiber-bed mist eliminators remove contaminants from a gas stream through the mechanisms of inertial impaction and Brownian diffusion. Fiber-bed mist eliminators that are designed based on inertial impaction as the principal control mechanism are more efficient than other control devices that use this mechanism (e.g., packed-bed scrubbers) because of the higher surface area-to-volume ratios. These higher ratios result in greater obstruction of the gas flow, which provides additional opportunities for impaction. Fiber beds designed for contaminant removal by Brownian diffusion as well as inertial impaction are the most efficient mist eliminators currently available. These units are typically installed downstream of an existing control system. Fiber-bed mist eliminators are not recommended as the first stage of a control system because of their tendency to plug. An existing control system, such as mesh pads or a packed-bed scrubber, should precede the fiber-bed mist eliminator to remove the majority of the emissions and thus prevent plugging of the fiber bed.

Fiber-bed mist eliminators typically consist of one or more fiber beds. Each bed consists of a hollow cylinder formed from two concentric screens attached to a top flange and a bottom drain plate (fiber cage). The fiber packed into the annular space between the two screens forms a bed with a radial thickness of 5 to 8 centimeters (cm) (2 to 3 inches (in.)). The cages are typically fabricated from either metal- or fiberglass-reinforced plastic. The fibers are fabricated from glass, ceramic, plastic, or metal in bulk (loose) or roving (rope) form. The individual fibers are usually less than 25 μm (1 mil) in diameter.

A typical impaction cylinder has an outside screen diameter of 66 cm (26 in.), a bed thickness of 5 cm (2 in.), and an overall length of 180 cm (72 in.). Pressure drops for impaction units range from 0.12 to 2.0 kiloPascals (kPa) (0.5 to 8 inches of water column [in. w.c.]).

Fiber-bed mist eliminators are also equipped with two spray nozzles. One nozzle is located at the top of the unit and is used to wash down any large particles that may clog the mist eliminator. The other nozzle is located at the bottom of the unit and is used as an aerosol spray to remove any contaminants in the mist eliminator that may cause plugging or improper drainage.

Fiber-bed units are designed for horizontal, concurrent gas-liquid flow through the bed. The contaminated gas stream and water flow to the downstream face of the bed, and the acid mist in the gas stream impacts on the surface of the fibers and drains down the outer face of the bed to the sump, while the cleaned gas flows up and out the top of the unit.

The major factors affecting the performance of the fiber-bed mist eliminator are the gas velocity and pressure drop. As with mesh-pad mist eliminators, gas flow rates with impaction-type, fiber-bed units must be maintained above a certain lower limit because of the decrease in efficiency of inertial impaction at low flow rates. The maximum gas flow rate in fiber-bed mist eliminators is limited by either: (1) A decrease in efficiency with increasing

gas flow rate or (2) a gas-phase pressure drop limitation.

Fiber-bed mist eliminators, using impaction-type cylinders, have recently been employed at a Naval depot that performs chromium electroplating and anodizing. Prior to entering the fiber-bed mist eliminators, each chromic acid stream is controlled with a vertical-flow, single packed-bed scrubber unit with chevron-blade mist eliminators preceding and following the scrubber. As previously discussed, this configuration is designed to prevent plugging of the fiberbed unit.

Emissions test results on fiber-bed mist eliminators suggest that these systems are capable of achieving outlet total chromium concentrations of 1.0×10^{-4} mg/dscm (4.4×10^{-8} gr/dscf) with corresponding removal efficiencies greater than 99.9 percent.

Operating costs for fiber-bed mist eliminators depend on the size and the design pressure drop. The size of the unit is a function of the airflow rate, which is determined by the surface area and configuration of the electroplating or anodizing tank(s). The design pressure drop is a function of the density of the fiber bed. The higher the bed density, the higher the pressure drop. Net annualized costs for fiber-bed mist eliminators are approximately 200 percent higher than the costs for single packed-bed scrubbers at both new and existing facilities, and approximately 90 percent higher than composite mesh-pad systems. These costs account for the additional control device, such as a packed-bed scrubber, that is required prior to the fiber-bed mist eliminator to prevent plugging. The only fiber-bed mist eliminator system known to be controlling chromic acid emissions from electroplating tanks is located at a government, not a commercial, facility, and is not considered a similar source. Because of this fact and the high costs associated with this control device, EPA has determined that fiber-bed mist eliminators are not MACT for new sources but are considered an emerging technology for the source categories being regulated.

4. Chemical Fume Suppressants

Chemical fume suppressants are compounds that are added directly to chromium electroplating and anodizing baths to reduce or inhibit misting. Fume suppressants include three types: wetting agents, foam blankets, and combinations that include both a wetting agent and a foam blanket. Trivalent chromium electroplating solutions also contain wetting agents. In the trivalent chromium bath, however, a wetting agent is used to enhance the uniformity of electroplating thickness, not as a fume suppressant. Therefore, the following discussion of fume suppressants as a control technology is specific to hexavalent chromium baths. Information on trivalent chromium baths can be found in sections V.A.2 and V.B.5.

An important distinction between wetting agents and foam blankets is in the mechanism by which they reduce emissions. Wetting agents reduce or inhibit misting by lowering the surface tension of the electroplating or anodizing bath. When the surface tension of the solution is reduced, gases escape at the surface of the electroplating solution with less of a "bursting" effect, forming less mist. Fume suppressants that produce a foam blanket do not preclude the formation of chromic acid mist, but rather trap the mist formed under a blanket of foam.

Fume suppressants are used widely by decorative chromium electroplaters. Hard chromium platers seldom use fume suppressants because the wetting agents used aggravate pitting, which affects the quality of the hard chromium plate. Also, when foam blankets are used, there is a potential for explosion of the entrapped hydrogen gas. These tendencies are more pronounced in hard chromium electroplating than in decorative chromium electroplating because of the higher current densities, longer electroplating times, and thicker deposits associated with hard chromium electroplating tanks.

a. *Wetting Agents.* The most common types of wetting agents used are fluorinated wetting agents, which are very stable throughout a wide range of operating temperatures, current densities, chromic acid concentrations, and oxidation-reduction reactions. A number of fume suppressant formulators indicate that wetting agents that are fluorocarbon-based may aggravate pitting and defects in base metals when electroplating thickness exceeds 13 to 25 μm (0.5 to 1 mil). Some fume suppressant vendor literature recommends caution regarding use of these compounds as the chromium thickness increases beyond 25 to 100 μm (1 to 4 mils) (depending on the product). However, some manufacturers now state that certain base metals have a tendency to pit and that this tendency is not aggravated by the use of fume suppressant additives.

Chromic acid electroplating baths typically have a surface tension of about 70 dynes/cm (4.8×10^{-3} lb_f/ft). The addition of a wetting agent can effectively lower the surface tension of these baths to about 40 dynes/cm (2.7×10^{-3} lb_f/ft). Further additions of the wetting agent will not lower the surface tension of the electroplating solution appreciably beyond this point. Surface tensions between 30 to 40 dynes/cm (2.0×10^{-3} to 2.7×10^{-3} lb_f/ft) minimize chromic acid mist formation because the hydrogen and oxygen gas bubbles generated during electroplating do not burst at the surface of the electroplating tank as they do at higher bath surface tensions.

The initial makeup volume of wetting agents is determined by the volume of electroplating or anodizing solution and the temperature of the bath. They are depleted from electroplating and anodizing baths by dragout. Dragout is the solution carried out of the electroplating or anodizing tank by parts as the parts are transferred between tanks. Monitoring the surface tension of the electroplating or anodizing bath is the most effective method for determining when to add wetting agent to the bath. The surface tension of the bath can be determined by using an easy-to-use, relatively inexpensive device called a stalagmometer.

b. *Foam Blankets.* Foam blankets are formed by agitation produced by the hydrogen and oxygen gas bubbles generated during electroplating. Once formed, the foam blanket is usually maintained at a thickness of 1.3 to 2.5 cm (0.5 to 1.0 in.) and covers the entire surface of the electroplating bath. Foam blankets trap the hydrogen gas and chromic acid mist in the foam layer. In order to maintain the desired foam thickness around the cathode, a heavy foam layer can develop in other areas (corners) of the tank. In these heavy foam areas, hydrogen gases will build up and if a spark is generated (e.g., from the contacting equipment) a hydrogen explosion can occur. As a result of this explosion, the foam layer, along with a portion of the electroplating solution, is blown out of the tank, and the chromium plate on the part may be damaged. If the foam layer is not maintained at a minimum reasonable thickness, the ability of the foam layer to inhibit misting is reduced.

Initial makeup volumes of foam blanket solutions are determined by the surface area of the electroplating bath, amount of current applied, and temperature and chromic acid concentration of the electroplating bath. Generally, the lower the temperature, the less product is needed.

Foam blankets are depleted primarily by decomposition; however, dragout of the foam may also be a factor. Also, foam blankets may be pulled into ventilation hoods if the solution level is too close to the hoods. Some types may also be depleted by excessive air

agitation of the bath. Appreciable concentrations of alkali metal ions, especially potassium, tend to reduce the solubility of some foam blankets.

Visual monitoring of the thickness of the foam blanket is the most common method for determining when to add foam blanket solution to the bath. The frequency of the maintenance additions depends on the amount of work processed through the electroplating tank and the dragout rate of the solution.

c. *Combination Fume Suppressants.* Combination fume suppressants (wetting agent plus a foam blanket) reduce the surface tension of the electroplating bath while forming a foam blanket over the surface. Because of the synergistic effects of the two components, less product is required than if either the wetting agent or the foam blanket were used alone.

d. *Factors Affecting Performance and Cost of Fume Suppressants.* The main factor affecting the performance of chemical fume suppressants is the amount of fume suppressant present in the electroplating or anodizing bath. If insufficient wetting agent is present in the bath, the surface tension of the solution will not be maintained below 40 dynes/cm (2.7×10^{-3} lb_f/ft) and, therefore, the effectiveness of the wetting agent in inhibiting misting will be substantially reduced. If a foam blanket is used, proper care must be taken to maintain the foam blanket at the specified thickness because a thin foam layer will not entrap the chromic acid mist efficiently, and areas of heavy foam may cause a hydrogen gas buildup and explosion potential.

Emission tests were conducted on a decorative chromium electroplating line with and without fume suppressants. Two types of fume suppressants were evaluated during the test program: (1) A foam blanket; and (2) a combination foam blanket and wetting agent. Test results indicate that fume suppressants are extremely effective in inhibiting the release of chromic acid mist. Hexavalent chromium concentrations range from 0.001 to 0.007 mg/dscm (4.4×10^{-7} to 3.1×10^{-6} gr/dscf) when a foam blanket or a combination foam blanket and fume suppressant is used in the electroplating bath. The hexavalent chromium concentrations measured when the combination foam blanket and wetting agent were used ranged from 0.001 to 0.003 mg/dscm (4.4×10^{-7} to 1.3×10^{-6} gr/dscf). These results indicated that the combination fume suppressant might be marginally more effective than the foam blanket type suppressant. Both types of fume suppressants reduced chromium emissions by more than 99.5 percent compared to uncontrolled levels.

The costs of using chemical fume suppressants depend upon the tank capacity, the amount of current applied, and the number of parts processed.

5. Source Reduction and Recycling

The Pollution Prevention Act of 1990 establishes the following environmental management hierarchy as national policy:

a. Pollution should be prevented or reduced at the source wherever feasible;

b. Pollution that cannot be prevented should be recycled in an environmentally safe manner wherever feasible;

c. Pollution that cannot be prevented or recycled should be treated in an environmentally safe manner wherever feasible; and

d. Disposal or other release into the environment should be employed only as a last resort and should be conducted in an environmentally safe manner.

Although the Act does not specifically define "pollution prevention," it states that source reduction is fundamentally different and more desirable than waste management and pollution control. Source reduction is defined as any practice that reduces the amount of any hazardous substance entering the waste stream or otherwise released into the environment prior to recycling, treatment, or disposal.

There are two source reduction alternatives available for decorative chromium electroplating tanks. The first involves the use of a trivalent chromium electroplating process instead of a chromic acid process. This alternative has two primary benefits. First, trivalent chromium may be less toxic than hexavalent chromium and is not presently classified as a known human carcinogen, as is hexavalent chromium. A second benefit is that these processes also result in less total chromium in process wastewaters because of the lower total chromium concentrations in the electroplating baths as compared to chromic acid electroplating baths. The total chromium concentration of trivalent chromium solutions is approximately one-fifth that of hexavalent chromium solutions. In addition, less sludge is generated because of the lower total chromium content in the wastewater. As discussed in section VI.K. of this preamble, EPA specifically requests comment on whether the trivalent chromium electroplating process should be required for all new decorative chromium electroplaters.

The addition of chemical fume suppressants is also considered to be a source reduction technique because fume suppressants inhibit emissions at the source. As mentioned previously, chemical fume suppressants are extremely effective (greater than 99.5 percent) in reducing emissions from decorative chromium electroplating and anodizing tanks.

In addition, each of the add-on pollution control techniques being considered for this source category has a recycling element; they allow for recycling of all collected chromium and/or reductions in the total wastewater treatment burden of a facility. All of the effluent generated from the control devices at hard chromium electroplating and anodizing tanks is recycled back to the electroplating tank to make up for evaporative losses. At decorative chromium electroplating tanks, where large quantities of rinse water are generated, scrubbers are often used as evaporators that reduce the total wastewater treatment burden by concentrating the process rinse waters prior to treatment. For this reason, a large majority of decorative chromium electroplaters continue to operate scrubbers in conjunction with fume suppressants. As discussed in section VI.K. of this preamble, EPA specifically requests comment on whether the final standards should require recycling of the wastewater.

Unlike decorative chromium electroplating tanks, hard chromium electroplating tanks typically do not use fume suppressants either alone or in conjunction with an add-on control device. As discussed earlier, wetting agents can cause pitting in the hard chromium plate and, historically, foam blankets have been viewed as explosion hazards. However, EPA obtained data from a test at a hard chromium electroplating operation using a fume suppressant (a combination wetting agent/foam blanket) in conjunction with an add-on control device, a mesh-pad mist eliminator. The EPA also performed a test to measure emissions from a system involving the use of a foam blanket and polypropylene balls in conjunction with a packed-bed scrubber to control emissions at a hard chromium electroplating operation. These data indicate that chromium removal efficiencies averaged 97.7 percent when a foam blanket was used and only 60.1 percent with the use of a combination fume suppressant. (These control efficiencies do not include control associated with the add-on control device, only the control associated with the foam blanket or fume suppressant. Outlet concentrations, considering

control, are provided in the paragraph below.)

The significant difference in the performance of the foam blanket compared to that of the combination fume suppressant at the hard chromium electroplating tanks cannot be explained by information obtained at the time of testing. Possible explanations for this inconsistency include differences in the maintenance of foam blankets, characteristics of the parts being plated, and the transportation and handling of the parts in the electroplating bath. The data do indicate that the use of foam blankets and combination fume suppressants in hard chromium electroplating tanks is less effective than the use of these compounds in decorative chromium electroplating tanks.

The above tests also indicated that overall emissions from a fume suppressant or foam blanket/control device system were lower than emission rates achieved solely with a control device. The emissions from the fume suppressant/mist eliminator were measured as 0.008 mg/dscm (3.5×10^{-6} gr/dscf), a 30 percent improvement in emission control over that obtained with the mist eliminator system alone. Emissions from the foam blanket/packed-bed scrubber system were also measured as 0.008 mg/dscm (3.5×10^{-6} gr/dscf), an 86 percent increase in emission control over that obtained with the packed-bed scrubber system alone. However, as previously stated, wetting agents can cause pitting in the hard chromium plate, and foam blankets have a potential explosion hazard. Therefore, the use of foam blankets and/or wetting agents in conjunction with add-on control devices was not considered feasible for the entire range of hard chromium electroplating tanks and is not included as a regulatory alternative. This does not preclude the use of these methods by some facilities, such as those tested, which may be able to comply with the standard by using wetting agents or foam blankets in conjunction with an add-on control device.

VI. Rationale for Selection of the Proposed Standards

This section describes the rationale for the decisions made by the Administrator in selecting the proposed standards.

A. Selection of Pollutant and Source Categories To Be Regulated

Section 112 requires EPA to establish national standards to reduce HAP emissions from source categories that emit these pollutants. Section 112(b) provides a list of 189 compounds that are considered to be HAP. Chromium compounds are included on this list of pollutants. Section 112(c) directs EPA to use this pollutant list to develop and publish a list of source categories for which NESHAP will be developed. This list of source categories, which was published in the **Federal Register** on July 16, 1992, includes major and area sources performing hard chromium electroplating, decorative chromium electroplating, and chromium anodizing. Thus, emissions of chromium compounds from these six source categories are being regulated by this proposed rulemaking.

The preamble to the list of source categories (57 FR 31588) presents the rationale for listing the chromium electroplating and anodizing area source categories. That discussion is repeated in the following paragraphs, and EPA requests comment on whether there is a basis for removing from the source categories list any of the categories or subcategories covered by the proposed standards. Specific information is requested concerning whether the delisting criteria of section 112(c)(9) would be met, or whether, in the alternative, it would be appropriate, in the case of any proposed subcategory (such as decorative electroplating using the trivalent chromium process), to conduct an assessment under section 112(c)(3) of the effect on human health or the environment before finally creating such subcategory and adding it to the source category list.

Chromium electroplaters can present an adverse health threat to populations living near the source of emissions. Chromium electroplaters mostly emit the hexavalent form of chromium, Cr(+6), as chromic acid mist, and lesser amounts of trivalent chromium Cr(+3). Current health effects data suggest that the hexavalent form of chromium is the most toxic of all chromium compounds. Both human case studies and epidemiological studies attest to the adverse health effects from inhalation of hexavalent chromium. Acute exposure to hexavalent chromium has been shown to cause nasal irritation in workers and other individuals. Intermediate and chronic inhalation exposure to chromium has been reported to cause adverse respiratory tract effects, including irritation and perforation of the nasal mucosa, decreases in lung function, and renal proteinuria. Animal studies of acute organ toxicity also suggest that chromium compounds may produce kidney and liver damage.

The carcinogenic health effects from chromium are also well documented. Hexavalent chromium is considered a Group A carcinogen because there is adequate evidence for its carcinogenicity in humans. Specifically, chronic occupational exposure to chromium has been associated with increased incidence of respiratory cancer in workers. The association of exposure to chromium and the induction of lung cancer is strengthened by the high lung cancer mortality ratios found in various epidemiological studies, the consistency of results across several studies, the increased tumors found in association with increasing doses, and the specificity of the tumor site. The role of trivalent chromium in carcinogenesis is presently unclear.

Reproductive studies on animals also suggest that chromium compounds may have some fetal and maternal toxicity effects. Although conclusive results can not be drawn from the available data, studies suggest that chromium compounds can adversely affect fetal development and male reproduction in experimental animals.

Recognizing the considerable uncertainties associated with cancer risk assessment, the Agency has developed nationwide emission and population exposure estimates associated with chrome platers and anodizers. Based on this analysis, the Agency estimates that chrome platers and anodizers contribute significantly to the total increased cancer incidence in the U.S. from airborne toxics. Hard chrome platers, decorative chrome platers, and acid anodizers may cause as many as 110 increased cancer cases per year in the U.S. In addition to significant population risks, chrome platers and anodizers contribute significantly to maximum individual cancer risks in the proximity of particular facilities. The Agency estimates that maximum, upper-bound individual risks range from two chances in 100,000 (2×10^{-5}) for small acid anodizing plants to five chances in 1,000 (5×10^{-3}) for large hard plating operations. All estimates of risk in this analysis are based on hexavalent chromium only, and not on trivalent chromium.

An Agency study of Southeast Chicago estimates that chrome platers contribute about one sixth of the total cancer incidence due to all sources of airborne toxics in the study area, including steel mills, road vehicles, and other industrial sources.

An Agency analysis of cancer incidence from air toxic emissions in five large U.S. cities shows that chrome platers contribute about one tenth of the total increased cancer incidence due to all sources of airborne toxics. Extrapolating the cancer rate in the five

cities to the U.S. yields an estimate of as high as 90 increased cases per year.

Currently, the only Federal emission regulations for electroplaters are limited to OSHA workplace emission standards, designed specifically to limit worker exposure. Fourteen States have adopted or proposed regulations for controlling chromium emissions from electroplaters.

The Agency finds that the overall emissions, exposures, and known and suspected health impacts associated with chromium electroplaters and anodizers present a threat of adverse effects to human health. Based on the finding above, the Agency has included chromium electroplaters and anodizers on the initial list of categories of area sources.

The six source categories subject to the proposed rulemaking were evaluated to determine if subcategorization of the source categories was justified. The Agency's analysis indicates that the decorative chromium electroplating source category should be subcategorized based on whether a chromic acid or trivalent chromium electroplating process is used. No subcategorization is recommended for the hard chromium electroplating and chromium anodizing source categories.

The decorative chromium electroplating source category has been subcategorized depending on whether a chromic acid (hexavalent chromium) or trivalent chromium electroplating process is used. These two subcategories are being considered separately because the trivalent chromium electroplating process is very different from the hexavalent chromium electroplating process. Trivalent chromium electroplating solutions typically contain between 22 to 30 g/L (3 to 4 oz/gal) of trivalent chromium. Chromic acid is considered a bath contaminant, and the total chromium concentration in trivalent baths is four times lower than that in chromic acid baths. Also, the trivalent chromium solutions contain wetting agents; these are used primarily to provide a uniform plate thickness across the entire surface area of the parts. While the wetting agents may also inhibit misting, this is a secondary purpose. In contrast, in chromic acid baths, wetting agents are specifically used to inhibit misting. Also, in a trivalent chromium process, the wetting agents are not added separately during the electroplating process. Electroplating solution composition is maintained through the use of automatic controllers that add specified amounts of a material on an Ampere-hour basis. Addition of wetting agents alone may jeopardize the trivalent chromium bath chemistry. Because some emissions control is inherent in the trivalent chromium electroplating process, tanks using this process are only required to monitor the process, whereas those tanks with a chromic acid electroplating process are required to add wetting agent to the electroplating solution.

Another consideration is that the trivalent chromium electroplating process, while suitable for the full range of decorative chromium electroplating tanks, has unique operating considerations. For example, the trivalent chromium electroplating process is more sensitive to contamination than hexavalent chromium electroplating baths. Certain materials such as copper, zinc, and lead, which are commonly found in the metal parts being plated, may contaminate the trivalent chromium bath solution. Also, the finish color achieved with the trivalent electroplating process may differ from that traditionally obtained with chromic acid baths, and the difference in color may be unacceptable to the end user. Finally, with the trivalent chromium bath, additional posttreatment and rinsing tanks may be needed.

Although the Agency did not find any basis for subcategorizing the hard chromium electroplating source category, it was determined that distinct size classes of facilities existed in the source category. The rationale for selecting these sizes is based primarily on control costs, which are discussed in sections VI.C.4 and VI.C.5; the size distinctions are presented here because sections of this preamble that precede section VI.C.4. contain discussion using the size distinctions.

For the purposes of this rulemaking, the distinction between small and large hard chromium electroplating facilities within the source category is based on the maximum cumulative potential rectifier capacity at a facility. A tank's rectifier capacity determines the amount of current (amperes) that can flow through the plating solution (from the anode to the cathode). Maximum cumulative potential rectifier capacity is calculated as:

$$\left(\sum RC_i\right) \times 8{,}400 \text{ hr/yr} \times 0.7$$

where:

RC_i=the rectifier capacity rating of an individual tank

8,400 hr/yr=operating schedule based on 24 hr/d, 7 d/wk, 50 wk/yr

0.7=the percent time the electrodes are energized

Based on the model plant parameters used for this analysis, a small model plant would have one plating tank, with a maximum rectifier capacity of 10,000 Amperes. The maximum rated capacity would be approximately 60 million Ah/yr. Therefore, the cutoff between small and large facilities has been established as 60 million Ah/yr. Existing facilities would follow the same procedure in calculating their total maximum rectifier capacity.

B. Selection of Emission Points To Be Covered by the Standard

The primary sources of HAP within the chromium electroplating and anodizing source categories are the electroplating and anodizing tanks, which emit chromium compounds. These are the emission points that would be covered by the proposed rule. Other processes located at facilities that perform chromium electroplating and anodizing that emit small quantities of other HAP include surface preparation steps such as acid dipping and vapor degreasing are not covered by this NESHAP. The HAP emitted from these processes are acid mists and solvent vapors. Hazardous air pollutant emissions from other metal plating processes such as nickel, copper, and cadmium plating are also not included in the scope of this rule. The reasons for excluding these emission points are provided below.

The Agency's study of chromium emissions from chromium electroplating and anodizing tanks was begun prior to the 1990 amendments to the Act. The study focused on chromium compounds only; information on sources emitting HAP other than chromium compounds had not been obtained. Therefore, only those sources emitting chromium compounds (i.e., the chromium electroplating and anodizing tanks) are included in this proposed rulemaking.

The additional time that would be required to develop the necessary background information to regulate the associated surface preparation steps could unnecessarily delay regulation of the electroplating and anodizing tanks. The EPA is in the process of developing NESHAP for emissions from degreasing tanks that would cover such operations located at facilities performing chromium electroplating and anodizing. Metal finishing processes that produce acid mists are found in a variety of source categories, and EPA will consider these sources in a forthcoming 5-year area source study.

C. Selection of Basis and Level of Proposed Standards for Existing and New Sources

1. Selection of MACT/GACT Approach

Section 112 of the amended Act directs the Administrator to promulgate standards that:

> require the maximum degree of reduction in emissions of the hazardous air pollutants . . . that the Administrator, taking into consideration the cost of achieving such emission reductions, and any nonair quality health and environmental impacts and energy requirements, determines is achievable * * *

This control level is referred to as MACT. Section 112(d)(3) of the amended Act specifies the requirements for determining MACT for new and existing sources. The MACT level is required for all major sources. However, the Administrator may elect to promulgate standards or requirements applicable to sources in categories or subcategories of area sources that provide for the use of generally available control technologies (GACT) or management practices by such sources to reduce emissions of HAP. The GACT approach can be less stringent than the MACT floor, and it considers the availability of the emission control systems, their costs and economic impacts, and the technical capabilities of owners/operators to operate and maintain emission control systems. Under the GACT approach, a "floor" evaluation is not conducted for each category or subcategory to assess the minimum allowable control. Also, the Administrator is not required to conduct a residual risk analysis to determine if more stringent standards are necessary to protect public health under section 112(f), although the Administrator may conduct such a residual risk analysis as appropriate. Such an analysis is required for source categories for which MACT is required.

The criteria for distinguishing major from area sources are included in the definitions of major and area sources in section 112(a). A major source is one that emits or has the potential to emit, considering control, 9.1 Mg/yr (10 tons/yr) or more of any HAP or 22.7 Mg/yr (25 tons/yr) or more of any combination of HAP. An area source is, by definition, any stationary source of HAP that is not a major source. It is expected that for each of the six source categories covered by this proposed rulemaking, the majority of sources in each category will be area sources. Chromium emissions from an electroplating or anodizing operation alone are unlikely to exceed the major source cutoffs. However, if the chromium electroplating or anodizing operation is located at a facility that meets the criteria for a major source due to HAP emissions from other operations, then it would be considered a major source for purposes of the proposed rule.

The Administrator is proposing to regulate area sources performing chromium electroplating and anodizing under section 112(c)(3), based on a finding that they present a threat of adverse effects to human health or the environment (see section VI. A.). This proposal is based on data that show that a significant amount of hexavalent chromium, a known human carcinogen, is emitted to the atmosphere from the chromium electroplating and anodizing tanks at the levels of chromium emissions that present a threat of adverse effects to human health.

In determining whether to regulate area sources by applying MACT or GACT, the Administrator also considered the availability of control technologies and the cost of compliance for area sources. The control technologies on which this proposed rulemaking is based include packed-bed scrubbers and composite mesh-pad systems for hard chromium electroplating operations and fume suppressants for decorative chromium electroplating and anodizing operations. Packed-bed scrubbers are currently used widely in the hard chromium electroplating industry; composite mesh-pad systems are also being installed at all sizes of facilities although their use is not yet as widespread as packed-bed scrubbers. Fume suppressants are used widely for decorative chromium electroplating and anodizing operations. Because of the availability of these control technologies, they would be considered appropriate bases for GACT as well as MACT. Also, the cost of applying these control technologies has been found to be reasonable for most sources in these source categories (see section VI.C.4).

Because of the high toxicity of chromium compounds and the availability and reasonable cost of control technologies, the Administrator is proposing to apply MACT to both major and area sources of chromium electroplating and anodizing. The application of MACT to both area and major sources ensures that a residual risk analysis of emissions associated with these sources will be conducted by the Agency, as required by section 112(f) of the Act, to determine whether additional regulation is warranted in the future to protect public health. The agency solicits comments on the proposal to establish MACT standards for area sources instead of adopting GACT standards.

2. Selection of the MACT Floor

As discussed in section II.C, Categorization/Subcategorization: Determining Maximum Achievable Control Technology "Floors," EPA develops and considers regulatory alternatives that are at least as stringent as the MACT floor as defined in the Act. The MACT floor is determined from information on various control levels within each of the categories and subcategories (baseline conditions). The baseline conditions that led to the development of the MACT floors are discussed below. Additional information on baseline conditions is found in Chapter 5 of the BID.

a. *Hard Chromium Electroplating MACT Floor.* Baseline conditions that were originally established for facilities operating hard chromium electroplating tanks were based on an industry survey of 44 hard chromium electroplating operations that was conducted in 1987. Based on this survey and industry census data, it was estimated that baseline conditions for facilities operating hard chromium electroplating tanks included a total population of 1,540 facilities. Of these tanks, 30 percent were uncontrolled, 30 percent were controlled by chevron-blade mist eliminators, and 40 percent were controlled by packed-bed scrubbers. Chevron-blade mist eliminators represent a control device efficiency of approximately 95 percent at representative inlet loadings for hard chromium electroplating tanks. The associated outlet concentration is 0.15 mg/dscm (6.6×10^{-6} gr/dscf). Alternatively, well-maintained and -operated packed-bed scrubbers that incorporate periodic washdown of the packing can achieve an emission reduction of 99 percent, with an associated outlet concentration of 0.03 mg/dscm (1.3×10^{-5} gr/dscf) considered feasible. Although EPA believes that an undetermined number of existing facilities are operating packed-bed scrubbers under less-than-ideal operating and maintenance conditions, if proper operation and maintenance procedures are implemented, existing units will readily achieve an emission limit of 0.03 mg/dscm (1.3×10^{-5} gr/dscf).

More recent information obtained from control device vendors confirms that composite mesh-pads are being used at approximately 5 percent of hard chromium electroplating facilities and that the growth in use is expected to continue. The vendor survey also indicated that these control devices are

being installed at all sizes of facilities. Based on emission test results from three facilities, a composite mesh-pad system can achieve an average outlet concentration of 0.013 mg/dscm (5.7×10^{-6} gr/dscf). Based on a representative inlet loading, the percent reduction achieved by the composite mesh-pad system is greater than 99.8 percent. The current use of this system in the industry as well as the fact that it represents the "maximum degree of reduction in emissions" (section 112(d)(3) of the Act) resulted in the selection of 0.013 mg/dscm (5.7×10^{-6} gr/dscf) as the MACT floor for new sources.

Some uncertainty surrounds the exact effect that the increasing use of composite mesh-pads has on the original existing source baseline. The EPA has no information on whether the composite mesh-pad systems were installed to replace or augment existing packed-bed scrubbers or if they were installed at facilities that were either uncontrolled or were using chevron-blade mist eliminators. This uncertainty, however, does not affect the existing source MACT floor; the same level of control would represent the MACT floor whether the original or modified baseline conditions are assumed. A discussion of how the existing source MACT floor is calculated under either circumstance is provided below.

In the first MACT floor analysis, it is assumed that composite mesh-pads are not included in the baseline conditions. The existing source MACT floor is determined by calculating the average emission limitation achieved by the best performing 12 percent of sources. Because it is estimated that 40 percent of the industry is currently using packed-bed scrubbers, and that a well-maintained and -operated packed-bed scrubber that incorporates periodic washdown of the packing can achieve outlet concentrations of 0.03 mg/dscm (1.3×10^{-5} gr/dscf), this emission limit (0.03 mg/dscm [1.3×10^{-5} gr/dscf] is the MACT floor for existing sources.

In the second MACT floor analysis, the baseline conditions are adjusted to account for the 5 percent of facilities using composite mesh-pads. In this scenario, the average emission limitation associated with 5 percent of facilities performing at 0.013 mg/dscm (5.7×10^{-6} gr/dscf) and 7 percent performing at the next highest level of control (0.03 mg/dscm [1.3×10^{-5} gr/dscf]) results in an emission limitation (0.023 mg/dscm [1.0×10^{-5} gr/dscf]) that does not correspond to any specific control technique.

As noted earlier (in section II.C), when the average emission limitation does not correspond to an emission limitation achievable with a specific type of control technique, EPA may use the emission limitation achieved by the facility at the 94th percentile (the median of the best performing 12 percent), which is equivalent to 0.03 mg/dscm (1.3×10^{-5} gr/dscf) in this case. This approach would result in an emission limitation of 0.03 mg/dscm (1.3×10^{-5} gr/dscf) as the MACT floor for existing hard chromium electroplating tanks. Either of the approaches to determining the MACT floor described above results in the same level of control.

b. *Decorative Chromium Electroplating—Chromic Acid Bath—MACT Floor.* Baseline conditions that were originally established for facilities with decorative chromium electroplating tanks were based on an industry survey of 63 decorative chromium electroplating operations that was conducted in 1987. Baseline conditions for decorative chromium electroplaters using chromic acid baths include a total facility population of 2,800 facilities of which 15 percent of facilities are uncontrolled, 40 percent use fume suppressants, 40 percent use fume suppressants in combination with packed-bed scrubbers, and 5 percent use packed-bed scrubbers. Because the inlet concentrations in decorative chromium electroplating are lower than those in hard chromium electroplating, the overall efficiency of packed-bed scrubbers is also lower (approximately 97 percent compared to 99 percent for hard chromium electroplating tanks). Alternatively, test results show that the use of chemical fume suppressants inhibit greater than 99.5 percent of the chromium from being released from an electroplating bath and are capable of achieving an outlet concentration of 0.003 mg/dscm (1.3×10^{-6} gr/dscf). Because more than 12 percent of the facilities in this source category use fume suppressants and no more effective control technique is available, the MACT floor for both new and existing decorative chromium electroplating tanks using a chromic acid bath is an emission limitation of 0.003 mg/dscm (1.3×10^{-6} gr/dscf).

c. *Decorative Chromium Electroplating—Trivalent Chromium Bath—MACT Floor.* Approximately 10 percent of decorative electroplaters use trivalent chromium baths. As discussed in section VI.A., EPA has determined that decorative chromium electroplating tanks using a trivalent chromium bath are a separate subcategory. Tests conducted on tanks using trivalent chromium electroplating baths indicate that the total chromium concentration in emissions from these baths is 0.048 mg/dscm (2.1×10^{-5} gr/dscf). Hexavalent chromium concentrations from these baths have been measured as 0.004 mg/dscm (1.7×10^{-6} gr/dscf).

Most trivalent chromium electroplating baths do not have ventilation systems such that the chromium concentration in emissions from these baths could be measured. Therefore, another parameter, surface tension, was measured during the emission tests; the tests indicated that trivalent chromium baths that meet the above emission levels should have surface tensions no greater than 55 dynes/cm (3.8×10^{-3} lb_f/ft). Based on these test data, the MACT floor for new and existing trivalent chromium electroplating tanks is operation of the bath consistent with the above concentrations (0.048 mg/dscm (2.1×10^{-5} gr/dscf)), as demonstrated through surface tension measurement.

d. *Chromium Anodizing Tanks MACT Floor.* Baseline conditions that were originally established for facilities with chromium anodizing tanks were based on an industry survey of 25 chromium anodizing operations that was conducted in 1987. Baseline conditions for chromium anodizing tanks include a total facility population of 680 facilities, of which 40 percent are uncontrolled, 10 percent use chevron-blade mist eliminators, 20 percent use packed-bed scrubbers, and 30 percent use fume suppressants. Once again, the average emission limits achieved by the best-performing 12 percent of the facilities in this category are associated with the use of fume suppressants. Also, a more efficient control technique is not available. Therefore, the MACT floor for both new and existing chromium anodizing sources is an emission limit of 0.003 mg/dscm (1.3×10^{-6} gr/dscf).

3. Regulatory Alternatives Considered

The existing source regulatory alternatives developed to select existing source MACT for each of the categories and subcategories are presented in Table 2. A brief discussion of the alternatives is presented below. More stringent control techniques beyond what would be required by the new source MACT floor are not available; therefore, no additional regulatory alternatives beyond the MACT floor were considered for new sources.

TABLE 2.—SUMMARY OF REGULATORY ALTERNATIVES FOR EXISTING SOURCES

Type of operation/regulatory alternative (RA)		
Hard chromium plating		
	Size of operation[a]	
	Small (<60 million Ah/yr)	Large (≥60 million Ah/yr)
RA I (MACT floor)	PBS[b]	PBS.
RA II	PBS	CMP[c]—Existing PBS exempt.
RA III	PBS	CMP.
RA IV	CMP—Existing PBS exempt	CMP.
RA V	CMP	CMP.
Decorative chromium plating—chromic acid bath		
RA I (MACT floor)	FS[d]	
Decorative chromium plating—trivalent chromium bath		
RA I (MACT floor)	TVC[e] (no action)	
Chromium anodizing		
RA I (MACT floor)	FS	

[a] Based on the maximum cumulative potential rectifier capacity of tanks at a facility.
[b] PBS=Packed Bed Scrubber.
[c] CMP=Composite Mesh Pad.
[d] FS=Chemical Fume Suppressant.
[e] TVC=Trivalent Chromium Plating Process.

a. *Hard Chromium Electroplating Regulatory Alternatives.* For hard chromium electroplating, the EPA evaluated five regulatory alternatives as shown in Table 2. The alternatives increase in control stringency from Regulatory Alternative (RA) I, the existing source MACT floor control level, to RA V. The alternatives are structured to determine whether a size or class distinction is appropriate in selection of MACT. Such a distinction is authorized by section 112(d)(1), which provides that the MACT standard may distinguish among classes, types, and sizes of sources within a category or subcategory.

Regulatory Alternative I would require the control level achieved by packed-bed scrubbers for both small and large hard chromium electroplaters. Regulatory Alternative II would increase the stringency for large hard chromium electroplaters by requiring the control level achievable by composite mesh-pads unless the source is already controlled with a packed-bed scrubber. Regulatory Alternative III would further increase the stringency for large hard chromium electroplaters by requiring the control level achievable by composite mesh-pads for all sources, even those already controlled with packed-bed scrubbers. Regulatory Alternative IV would increase the stringency for small hard chromium electroplaters by requiring the control level achievable by composite mesh-pads, except for those already controlled by packed-bed scrubbers. Regulatory Alternative V would require the control level achievable by composite mesh-pads for all small and large hard chromium electroplaters, with no exceptions.

b. *Decorative Chromium Electroplating—Chromic Acid Bath—Regulatory Alternative.* The control technology that represents the MACT floor, i.e., the use of fume suppressants, is the highest level of control achievable by the subcategory. Therefore, only one regulatory alternative is possible.

c. *Decorative Chromium Electroplating—Trivalent Chromium Bath—Regulatory Alternative.* There are no regulatory alternatives other than the no-action alternative for trivalent chromium processes. Because of the presence of a wetting agent as an integral part of the bath chemistry, and the low emission potential, no controls are currently in use for this process.

d. *Chromium Anodizing Tanks Regulatory Alternative.* The control technology that represents the MACT floor, i.e., the use of fume suppressants, is the highest level of control achievable by the category. Therefore, only one regulatory alternative is possible.

4. Nationwide Impacts of the Regulatory Alternatives

This section presents the nationwide environmental, energy, cost, and economic impacts of the RA's presented in Table 2. For purposes of assessing impacts, each RA is compared to the baseline or no-action alternative. The baseline levels of control were obtained from responses to an industry survey conducted by EPA in 1985. The survey provided information on control techniques at 44 hard chromium electroplating facilities, 63 decorative chromium electroplating facilities, and 25 chromium anodizing facilities. A more recent follow-up survey of vendors supplying composite mesh-pads was also conducted after the initial survey to assess any changes in the control level used in the industry. This survey demonstrated that composite mesh-pads were being installed on new and existing hard chromium electroplating tanks, regardless of facility size.

As explained in section VI.C.2, the baseline conditions for this industry are constantly changing as existing facilities replace old control equipment with new, more efficient control devices such as composite mesh-pads. The impacts presented here, however, are based on baseline conditions as established through the initial industry survey. This is because the follow-up vendor survey did not provide specific information on whether the composite mesh-pads were replacing previously uncontrolled tanks, or tanks that had been controlled with a less efficient control device. As stated in section VI.C.2, results of the vendor

survey indicate that approximately 5 percent of the facilities within the hard chromium electroplating source category are using composite mesh-pads. Assuming that each composite mesh-pad was installed at a different facility, the maximum number of facilities with these devices would be approximately 80 out of an estimated 1,540 facilities. Given the relatively small number of composite mesh-pads being used, the nationwide impacts that would result if these facilities were accounted for in the baseline conditions would not differ significantly from those presented here.

a. *Baseline Conditions.* For the purposes of this analysis, the baseline conditions presented in the following paragraphs were used.

For hard chromium electroplating, it was estimated that, at baseline, 30 percent of the tanks are uncontrolled, 30 percent are controlled by chevron-blade mist eliminators, and 40 percent are controlled by packed-bed scrubbers.

For decorative chromium electroplating, it was estimated that, at baseline, 15 percent are uncontrolled, 40 percent are controlled by chemical fume suppressants, 40 percent are controlled by chemical fume suppressants in conjunction with packed-bed scrubbers, and 5 percent are controlled by packed-bed scrubbers. In calculating aggregate nationwide impacts for decorative chromium electroplating tanks, the following control scenario was assumed for RA I: 58 percent of the existing tanks will operate with chemical fume suppressants alone, and 42 percent of the existing tanks will operate with chemical fume suppressants in conjunction with packed-bed scrubbers. The combined use of techniques is common because packed-bed scrubbers serve a dual purpose. In addition to controlling air pollution, the scrubbers serve as atmospheric evaporators that concentrate the process rinse waters requiring treatment. Therefore, it is assumed that existing tanks currently using chemical fume suppressants in conjunction with packed-bed scrubbers will continue this practice and that half of the tanks that currently use packed-bed scrubbers alone will opt to operate the scrubber in conjunction with fume suppressants.

For chromium anodizing, it was estimated that, at baseline, 40 percent are uncontrolled, 10 percent are controlled by chevron-blade mist eliminators, 20 percent are controlled by packed-bed scrubbers, and 30 percent are controlled by chemical fume suppressants.

No net growth is projected for the chromium electroplating and anodizing industry. Contacts with equipment suppliers indicate that the majority of new equipment installations occur at existing facilities as a result of replacement of obsolete capacity or expansion of the existing capacity. The equipment suppliers indicated that very few new facilities have been constructed in the last 5 years. Consequently, the nationwide impacts presented below are the impacts beyond baseline of the RA's on existing tanks only. Impacts on new facilities are presented at the end of this section for typical, new model plant configurations only.

b. *Environmental Impacts.* Estimates of nationwide emission reductions and energy and solid waste impacts associated with each regulatory alternative are presented in Table 3. The RA's correspond to those that were presented in Table 2. To determine impacts beyond baseline using the numbers on Table 3, subtract the baseline number from the total number for a given alternative. To determine incremental impacts between regulatory alternatives, subtract the value for the less stringent of the two alternatives from the value for the more stringent.

TABLE 3.—ENVIRONMENTAL IMPACTS OF THE REGULATORY ALTERNATIVES

Type of operation	RA	Nationwide emission estimate, Mg/yr (tons/yr) [a]		Nationwide energy impacts, MWh/yr [b]		Nationwide solid waste impacts, m³/yr (ft³/yr) [c]	
		Small (<60 million Ah/yr)	Large (≥60 million Ah/yr)	Small (<60 million Ah/yr)	Large (≥60 million Ah/yr)	Small (<60 million Ah/yr)	Large (≥60 million Ah/yr)
Hard chromium plating	Baseline	18.5 (20.3)	126.6 (139.3)	20,300	112,300	18 (640)	26 (920)
	RA I	0.54 (0.59)	3.7 (4)	26,600	136,000	44 (1,550)	64 (2,260)
	RA II	0.54 (0.59)	1.93 (2.12)	26,600	183,370	44 (1,550)	118 (4,170)
	RA III	0.54 (0.59)	0.74 (0.81)	26,600	215,220	44 (1,550)	156 (5,510)
	RA IV	0.28 (0.3)	0.74 (0.81)	34,797	215,220	78 (2,750)	156 (5,510)
	RA V	0.11 (0.12)	0.74 (0.81)	40,284	215,220	103 (3,640)	156 (5,510)
Decorative chromium plating—chromic acid plating process.	Baseline	.....	10.5 (11.5)	.....	106,000	.....	67 (2,400)
	RA I	.....	0.3 (0.3)	.....	105,000	.....	63 (2,200)
Chromium anodizing	Baseline	.....	3.6 (3.9)	.....	48,000	.....	8 (280)
	RA I	.....	0.04 (0.05)	.....	45,000	.....	0 (0)

[a] For the nationwide emission estimate calculations, refer to Chapter 6, Section 6.2 of the BID for Proposed Standards.
[b] For the nationwide energy impact calculations, refer to Chapter 6, Section 6.3 of the BID for Proposed Standards.
[c] For the nationwide solid waste impact calculations, refer to Chapter 6, Section 6.5 of the BID for Proposed Standards.

Impacts on wastewater treatment or discharges were considered negligible because of the industry practice to recirculate control device effluent back to the electroplating tanks as makeup to compensate for evaporative losses. Solid waste is generated as a result of the need to periodically replace packing and mesh material used in the control systems. The nationwide solid waste impact is based on the frequency of replacement, the volume of material per control device, a compaction factor of 50 percent prior to disposal, and the estimated number of tanks nationwide.

i. *Hard Chromium Electroplating Tanks—RA I.* For hard chromium electroplating tanks, RA I represents a 97 percent reduction in the nationwide baseline emissions. The total nationwide emission reduction associated with this alternative is 140 Mg/yr (155 tons/yr).

The total nationwide energy impact beyond baseline of RA I is approximately 30,000 MWh/yr. This increase and the incremental increases in energy impacts between RA's are due to increases in the pressure drop across control systems and their corresponding

increase in the fan horsepower requirements.

The total nationwide solid waste impact beyond baseline is 64 m^3/yr (2,260 ft^3/yr). The increase in solid waste over baseline is due to increases in the number of tanks using control systems that require periodic disposal of packing material.

Regulatory Alternative II. The total nationwide emission reduction associated with RA II is 143 Mg/yr (157 tons/yr). The total nationwide energy impact beyond baseline of RA II is approximately 77,000 MWh/yr. The total nationwide solid waste impact beyond baseline is 118 m^3/yr (4,170 ft^3/yr).

Regulatory Alternative III. The nationwide emission reduction beyond baseline associated with RA III is 144 Mg/yr (159 tons/yr). The total nationwide energy impact beyond baseline of RA III is approximately 109,200 MWh/yr. The total nationwide solid waste impact beyond baseline is 156 m^3/yr (5,500 ft^3/yr).

Regulatory Alternative IV. The nationwide emission reduction beyond baseline associated with RA IV is 144 Mg/yr (159 tons/yr). The total nationwide energy impact beyond baseline of RA IV is approximately 117,400 MWh/yr. The total nationwide solid waste impact beyond baseline is 190 m^3/yr (6,700 ft^3/yr).

Regulatory Alternative V. The nationwide emission reduction beyond baseline associated with RA V is 144 Mg/yr (159 tons/yr). The total nationwide energy impact beyond baseline of RA V is approximately 122,900 MWh/yr. The total nationwide solid waste impact beyond baseline is 215 m^3/yr (7,590 ft^3/yr).

ii. *Decorative chromium electroplating tanks—chromic acid bath.* Regulatory Alternative I corresponds to a 97-percent reduction against nationwide baseline emission levels. The nationwide emission reduction associated with this alternative is 10 Mg/yr (11 tons/yr). There is no energy impact associated with RA I. In fact, the nationwide energy requirement for RA I is projected to be lower than that at baseline because of the discontinuation of add-on control systems on some decorative chromium tanks. There is no increase in the amount of solid waste generated under RA I because there is no solid waste associated with the use of chemical fume suppressants. The solid waste generated under this alternative is associated with those tanks that continue to operate packed-bed scrubbers in conjunction with fume suppressants.

iii. *Decorative chromium electroplating tanks—trivalent chromium bath.* Regulatory Alternative I, which is a no-action alternative, represents no additional emission reduction from baseline. There are also no energy or solid waste impacts.

iv. *Chromium anodizing tanks.* Regulatory Alternative I corresponds to an emissions reduction of 99 percent or 3.5 Mg/yr (4 tons/yr). The energy impacts associated with RA I represent a decrease of 6 percent from baseline. This decrease is due to the discontinuation of packed-bed scrubbers and chevron-blade mist eliminators at those tanks that currently use these control systems. Regulatory Alternative I would also reduce the amount of solid waste generated by 100 percent. Solid waste is generated at baseline conditions due to the use of packed-bed scrubbers. No solid waste is generated from the use of chemical fume suppressants.

c. *Cost Impacts.* Aggregate nationwide capital and net annualized costs for each RA are presented in Table 4.

TABLE 4.—COST IMPACTS OF THE REGULATORY ALTERNATIVES

Type of operation	RA	Nationwide capital costs, millions[a]		Nationwide annualized costs, millions[a]		Nationwide emission reduction Mg/yr[b] (ton/yr)	Incremental cost-effectiveness, $/Mg ($/ton)[c]
		Small (<60 million Ah/yr)	Large (≥60 million Ah/yr)	Small (<60 million Ah/yr)	Large (≥60 million Ah/yr)		
Hard chromium plating.	RA I	19.5	22.3	5.2	6.1	140.86(155)	80,000 (73,000)
	RA II	19.5	21.3	5.2	12.2	142.66 (156.9)	3,400,000 (3,100,000)
	RA III	19.5	25.1	5.2	17.1	143.82 (158.2)	4,200,000 (3,800,000)
	RA IV	12.6	25.1	7.6	17.1	144.08 (158.5)	9,200,000 (8,400,000)
	RA V	11.4	25.1	9.8	17.1	144.25 (158.7)	12,900,000 (11,700,000)
Decorative chromium plating.	RA I					10.2 (11.2)	0 (0)
Chromium anodizing.	RA I					3.56 (3.9)	0 (0)

[a] For further description of the nationwide cost impacts refer to Chapter 7, Section 7.6 of the BID for Proposed Standards.

[b] Nationwide emission estimates are provided in Table 3: Emission reductions are calculated by subtracting the emissions associated with a given alternative from the baseline emission estimate.

[c] Incremental cost-effectiveness is calculated by dividing the incremental cost of two alternatives by the incremental emission reduction. In this Table, the incremental cost-effectiveness of an alternative is calculated by comparing it to the previous alternative. Estimates calculated from the costs and emission reductions presented in this table may not match the actual estimates presented in this column due to rounding.

i. *Hard Chromium Electroplating Tanks—RA I.* Regulatory Alternative I would result in nationwide increases in capital and annualized costs beyond baseline of $42 million and $11 million per year, respectively. The incremental cost of RA I compared to baseline is approximately $80,000/Mg ($73,000/ton).

Regulatory Alternative II. With RA II, nationwide capital and annualized cost increases beyond baseline are $41 million and $17 million per year, respectively. The capital costs for large facilities are actually lower than they were for RA I even though a more stringent control technology is required. This is because composite mesh-pads have a lower capital cost, but higher annual cost, than packed-bed scrubbers. The incremental cost effectiveness of RA II compared to RA I is approximately $3.4 million/Mg ($3.1 million/ton).

Regulatory Alternative III. For RA III, the nationwide capital cost increase beyond baseline that would result from RA III is $45 million, and the annualized cost increase beyond baseline is $22 million. The incremental cost effectiveness of RA III compared to RA II is $4.2 million/Mg ($3.7 million/ton).

Regulatory Alternative IV. Regulatory Alternative IV results in nationwide capital and annualized cost increases beyond baseline of $38 million and $25 million per year, respectively. Once again, the requirements for composite mesh-pads, this time at small hard chromium electroplating facilities, result in decreases in capital costs and increases in annual operating costs. The incremental cost effectiveness of RA IV compared to RA III is approximately $9.2 million/Mg ($8.4 million/ton).

Regulatory Alternative V. Regulatory Alternative V results in nationwide capital and annualized cost increases beyond baseline of $37 million and $27 million per year, respectively. The capital cost decrease (and annualized cost increase) compared to RA IV is due to the addition of the small hard chromium electroplating facilities that are required to replace existing packed-bed scrubbers with composite mesh-pads. The incremental cost effectiveness of RA V compared to RA IV is approximately $12.9 million/Mg ($11.8 million/ton).

The total annual reporting and recordkeeping costs would be approximately $8.6 million. These costs are the same for all the regulatory alternatives.

ii. *Decorative chromium electroplating tanks—chromic acid electroplating solution.* For decorative chromium tanks using a chromic acid electroplating process, there is no nationwide capital cost increase beyond baseline associated with RA I because there are no capital costs associated with the use of chemical fume suppressants. The capital and annualized costs projected under RA I are driven by the assumption that 42 percent of the facilities will elect to use packed-bed scrubbers in conjunction with chemical fume suppressants. In fact, a slight decrease in nationwide baseline costs are expected under RA I because of the discontinuation of some add-on pollution control equipment at some decorative chromium electroplating facilities. However, the total annual reporting and recordkeeping costs would be approximately $14 million.

iii. *Decorative chromium electroplating tanks—trivalent chromium electroplating solution.* As previously stated, RA I for those decorative chromium electroplating facilities using a trivalent chromium bath is a no-action alternative. Thus, there are no control cost impacts. However, the total annual reporting and recordkeeping costs would be approximately $1.6 million.

iv. *Chromium anodizing tanks.* Regulatory Alternative I for anodizing tanks has no capital costs because fume suppressants require no equipment purchases. There is no annualized control cost impact beyond baseline for RA I. In fact, nationwide annualized costs are expected to decrease under RA I due to the discontinuation of add-on pollution control systems that are less effective and are more costly than fume suppressants. However, the total annual reporting and recordkeeping costs would be approximately $3.8 million.

d. *Economic Impacts.* The following section presents the economic impacts associated with each RA. Economic impacts were assessed by examining the effect of the RA's on the cost of electroplating and on the final end-product prices. In addition, the effect of each RA on small businesses was estimated in a small businesses impact analysis. This analysis used EPA's Office of Policy, Planning, and Evaluation's 1982 Regulatory Flexibility Act guidelines to determine if there were significant impacts on a substantial number of small businesses. According to those guidelines, the following criteria constitute a significant adverse economic impact: (1) Annual compliance costs increase the total cost of production for small entities by more than 5 percent; (2) compliance costs as a percentage of sales for small entities are at least 10 percent higher than compliance costs as a percentage of sales for large entities; (3) capital costs of compliance represent a significant portion of capital available to small entities, considering internal cash flow plus external financing capabilities; and (4) the requirements of the regulation are likely to result in closures of small entities.

i. *Hard chromium electroplating operations—Regulatory Alternative I.* The economic impacts associated with RA I for hard chromium electroplating operations are not significant. End product price increases are well below 1 percent. The estimated number of small business closures for RA I ranges from 14 to 20 of the 1,170 small hard plating operations. Based on an analysis of the common financial ratios used by banks to assess loan applications for typical small facilities, there are no capital availability problems under RA I. All operations should be able to acquire the capital necessary to install a packed-bed scrubber system if they do not already have one.

Regulatory Alternative II. Regulatory Alternative II does not result in significant economic impacts. Once again the end product price increases are less than 1 percent. For RA II, the estimated number of closures ranges from 20 to 23. Capital availability problems are also avoided under RA II for the following reasons. First, small operations are required to use packed-bed scrubbers for which the capital costs should not be prohibitive. Second, large facilities that currently use packed-bed scrubbers may continue to use these devices and thus will have little or no capital requirements to meet the regulation. Finally, because the capital cost of composite mesh-pad systems is actually lower than that of packed-bed scrubbers, large facilities required to use composite mesh-pads will not have problems obtaining the necessary capital.

Regulatory Alternative III. The estimated number of closures under RA III ranges from 20 to 28. However, the end product price increases resulting from this alternative are still insignificant (below 1 percent). Also, because RA III requires a control level equivalent to that of composite mesh-pad systems for all large facilities, while the required control level for small facilities continues to be equivalent to the use of packed-bed scrubbers, there are no capital availability problems because larger facilities should be able to obtain the necessary capital.

Regulatory Alternative IV. The end product price increases remain below 1 percent, and the estimated number of closures ranges from 33 to 39 under RA IV. In addition, capital availability problems are avoided because RA IV allows small facilities that currently use packed-bed scrubbers to continue using those systems. Other small facilities may have to purchase a composite mesh-pad system, but because the capital cost of this type of system is lower than that of a packed-bed scrubber, small facilities should be able to obtain the required capital.

Regulatory Alternative V. Under RA V, end product price increases are below 1 percent, and the number of estimated closures ranges from 37 to 51. However, because RA V requires all hard chromium electroplating operations to use composite mesh-pads regardless of whether they currently operate a packed-bed scrubber, some small facilities currently using packed-bed scrubbers may have a difficult time acquiring the necessary capital to purchase a composite mesh-pad system. Financial institutions may not be willing to lend the necessary capital to retrofit or replace an existing packed-bed scrubber to a small facility that is still paying for those existing systems.

ii. *Decorative chromium electroplating and chromium anodizing operations.* The economic impacts

associated with the regulatory alternatives for both decorative chromium electroplating and chromium anodizing operations are not significant. For decorative chromium operations using the chromic acid plating process and for chromium anodizing operations, this results from the extremely low annual control cost. Small increases in both the electroplating costs (less than 5 percent) and the anodizing costs (less than 7 percent) are estimated in the economic analysis. As a result, end product price increases are also very small (less than 1 percent). The RA for decorative chromium operations using the trivalent chromium plating process is no action; thus, there is no economic impact. No small business closures are expected for either decorative chromium electroplating or chromium anodizing operations due to the low cost of control.

e. *Environmental and Cost Impacts for New Tanks.* This section presents environmental and cost impacts for new tanks. These impacts are provided on an individual model plant basis and are calculated against a baseline of no control. No aggregate nationwide impacts for new facilities are presented because there are no reliable estimates for totally "new" facilities.

Environmental and cost impacts for new hard and decorative chromium electroplating tanks are presented in Tables 5 and 6, respectively. For hard chromium electroplating tanks, the proposed standard requires the application of composite mesh-pad systems, which corresponds to a 99.8-percent reduction in uncontrolled emissions. Energy impacts for composite mesh-pad systems vary from 37,300 to 895,200 kwh/yr. The solid waste impact resulting from the application of composite mesh-pad systems is low, ranging from 0.19 to 1 m^3/yr (7 to 35 ft^3/yr). The capital costs for composite mesh-pad systems range from $27,200 to $143,600; the annual operating costs range from $13,500 to $76,700.

TABLE 5.—ENVIRONMENTAL AND COST IMPACTS OF CONTROL TECHNIQUES AT NEW HARD CHROMIUM PLATING OPERATIONS

Control technique/model plant size	Emission reduction, kg/yr (lb/yr)	Energy impact, kWh/yr	Solid waste impact, m^3/yr (ft^3/yr)	Capital costs, (dollars)	Net annual cost, $/yr
Composite mesh-pad systems:					
Small	50 (110)	37,300	0.19 (6.7)	27,200	13,500
Medium	420 (924)	261,000	0.52 (18)	71,800	32,800
Large	1,600 (3,520)	895,200	1.0 (35)	143,600	76,700

TABLE 6.—ENVIRONMENTAL AND COST IMPACTS OF CONTROL TECHNIQUES AT NEW DECORATIVE CHROMIUM PLATING OPERATIONS

Control technique/model plant size	Emission reduction, kg/yr (lb/yr)	Energy impact, kWh/yr	Solid waste impact, m^3/yr (ft^3/yr)	Capital costs, (dollars)	Net annual cost, $/yr
Chemical fume suppressants:					
Small	6.0 (13)	14,900	0 (0)	0	1,000
Medium	23.9 (52.6)	59,700	0 (0)	0	3,300
Large	239 (526)	156,700	0 (0)	0	17,200

For decorative chromium tanks using a chromic acid electroplating process, the use of chemical fume suppressants represents a 99.5-percent reduction in uncontrolled emission levels. No energy or solid waste impacts are associated with chemical fume suppressants. Also, no capital investment is associated with chemical fume suppressants, and the annual control costs are low, varying from $1,000/yr for a small operation to $17,200/yr for a large operation.

New decorative chromium tanks that use a trivalent chromium process would have no cost or energy impacts because it is assumed they would comply with the standard simply by using the trivalent chromium bath.

The only control technique examined for new chromium anodizing tanks was the use of chemical fume suppressants. The use of chemical fume suppressants represents a 99.5-percent reduction in uncontrolled emission levels. The annual operating costs associated with fume suppressants range from $1,600 for small tanks to $4,300 for large tanks. No energy or solid waste impacts are associated with fume suppressant usage. Also, no capital investment is associated with fume suppressant usage.

5. Selection of MACT

a. *New Source MACT.* In all cases, MACT for new sources is based on the MACT floor for new sources presented in section VI.C.2., Selection of the MACT floor, above. For hard chromium electroplating sources, new source MACT is a total chromium emission limit of 0.013 mg/dscm (5.7×10^{-6} gr/dscf), which is based on the use of composite mesh pads. An emission limit of 0.003 mg/dscm (1.3×10^{-6} gr/dscf), which is based on the use of fume suppressants, represents new source MACT for decorative chromium electroplaters using chromic acid baths and for chromium anodizing tanks. For those decorative chromium electroplating tanks that use a trivalent chromium electroplating process, new source MACT is the continued operation of the trivalent chromium electroplating process, with monitoring of the surface tension required. In each case, the new source MACT floor represents the "emission control that is achieved in practice by the best controlled similar source." The EPA considered whether there were any classes within the categories where the MACT floor did not represent the level associated with the "best controlled similar source" but did not find any such classes.

b. *Existing Hard Chromium Electroplating MACT.* To determine MACT for hard chromium electroplating, EPA evaluated the emission reductions, costs, economic impacts, and other environmental and energy impacts of the MACT floor control level (achievable with packed-bed scrubbers) and levels of control more stringent than the floor (achievable with composite mesh pad systems). These impacts were evaluated

separately for small and large platers and for platers already well-controlled (with packed bed scrubbers). These size and class distinctions were made for analytical purposes as authorized by section 112(d)(1) of the Act which provides that the Administrator may distinguish among classes, types, and sizes of sources within a category or subcategory in establishing standards. Section VI.C.3 of this preamble describes the regulatory alternatives (RA's). For small platers, RA's I, II, and III would all require the floor level of control. Regulatory Alternative IV is more stringent, and RA V would require the most stringent control. For large platers, RA I would require the floor level of control, RA II is more stringent, and RA's III, IV, and V would all require the most stringent control.

The following discussion of the primary factors EPA considered in determining MACT provides separate rationales for small and large platers. The primary factors that affected the decision are the emission reductions achievable, the cost of control, and the economic impacts. As described in section VI.C.4 of this preamble, the other environmental (solid waste and water) and energy impacts of various alternatives would not be significant. Therefore, they were not primary factors in the MACT decision and are not discussed in this section.

The regulatory analysis discussed below indicates what appear to be very high costs of control compared to the associated chromium emission reductions for all the regulatory alternatives. However, when the high toxicity of chromium and the proximity of exposed populations to electroplating facilities are considered, the costs of control are found to be as reasonable as those for other pollutants in other source categories. One pound of chromium is roughly equivalent in cancer potency to 1500 pounds of benzene. Specifically, the factor of 1,500 results from a quantitative comparison of the unit risk estimates for benzene and chromium. While quantitative comparisons of potencies of carcinogens carry with them considerable uncertainties, the highly toxic nature of chromium means that very small quantities of emissions can cause air pollution with very serious adverse health impacts on the surrounding population. For this reason, higher costs of controlling a given quantity of these emissions would be more acceptable than for a less toxic pollutant.

c. *Small hard chromium electroplaters.* As shown in Tables 3 and 4, for small platers a significant emission reduction (18 Mg/yr (19.7 tons/yr)) beyond baseline would be achieved by RA's I, II, and III (packed-bed scrubbers) at an incremental annualized cost of $5.2 million per year. This results in an incremental cost effectiveness of $290,000 per Mg ($260,000 per ton). This is equivalent to $130/lb of chromium emission reduction, which is comparable to approximately $200/ton of benzene emission reduction, if relative cancer potency is factored in. The economic impact of requiring packed-bed scrubbers on small platers would not be significant. The EPA's economic impact analysis found that most small platers could obtain funds to install and operate the scrubbers without serious adverse impacts. A typical small plater has sales revenue of $1 million, and for an uncontrolled facility the capital and annualized costs of packed-bed scrubber control would be $36,700 and $9,800, respectively. However, the retrofit costs of installing packed-bed scrubbers for facilities with less efficient control systems would be higher. The nationwide incremental capital cost increase would be $20 million.

Regulatory Alternative IV is more stringent than RA III for small platers in that it would require the use of composite mesh pads for all facilities except those already controlled with packed-bed scrubbers. The nationwide incremental emission reduction of RA IV compared to RA III would be 0.26 Mg/yr (0.29 ton/yr) at an incremental annualized cost of $2.4 million per year. This results in an incremental cost effectiveness of $9.2 million/Mg ($8.4 million/ton) of chromium emission reduction. This is equivalent to $4,180/lb of chromium emission reduction, which is comparable to approximately $6,000/ton of benzene emission reduction, if relative cancer potency is factored in. Thus, a small incremental emission reduction would be achieved at a significant increase in annualized cost. The economic impact of RA IV would not be significant because small platers could obtain capital for composite mesh pads as readily as they could for packed-bed scrubbers, and replacement of existing packed-bed scrubbers would not be required under this alternative. For a typical uncontrolled small plater, the capital cost for a composite mesh-pad system would be $27,200, which is lower than that for a packed-bed scrubber; however, the annualized cost would be $13,500 which is higher than that for the packed-bed scrubber. The nationwide capital costs for RA IV compared to RA III would be $7 million less than for RA III because the capital costs for composite mesh-pad systems are lower than for packed-bed scrubbers.

Regulatory Alternative V is more stringent than RA IV for small platers in that it would require the use of composite mesh pads for all facilities. This means that those currently controlled with packed-bed scrubbers would be required to replace them with composite mesh pads or retrofit them to achieve the more stringent control level. The nationwide incremental emission reduction of 0.17 Mg/yr (0.19 ton/yr) would be achieved at an incremental annualized cost of $2.2 million per year. This is a significant cost increase compared to the associated emission reduction. This results in an incremental cost effectiveness of $12.9 million/Mg ($11.7 million/ton) of chromium emission reduction. This is equivalent to $5,900/lb of chromium emission reduction, which is comparable to approximately $8,000/ton of benzene emission reduction, if relative cancer potency is factored in. The incremental cost effectiveness of RA V compared to RA III is $10.7 million/Mg ($9.7 million/ton) of chromium emission reduction. This is equivalent to $4,900/lb of chromium emission reduction, which is comparable to approximately $7,000/ton of benzene emission reduction, if relative cancer potency is factored in. The incremental impacts of RA V compared to RA IV or RA III are considerably higher than those of RA III compared to RA I or II. Small platers would find it difficult or impossible to obtain the necessary capital to replace or retrofit existing packed-bed scrubbers with composite mesh-pad systems.

The Administrator has selected RA III, the MACT floor level of control, as the basis for the proposed MACT standard for small hard chromium electroplaters. This selection is based on consideration of the significant emission reductions achievable at reasonable costs and other environmental, energy and economic impacts. The more stringent RA's IV and V were rejected because the incremental costs of control and economic impacts would be unreasonable when compared to the small incremental emission reduction that would be achieved. However, comments are specifically requested on this decision and whether a different control level should be required in the final standard. Commenters on this issue should provide supporting rationale for their positions.

d. *Large hard chromium electroplaters.* As shown in Tables 3 and 4, for large hard platers, the nationwide emission reduction that would be achieved by requiring packed-bed

scrubbers under RA I, the MACT floor level of control, would be about 123 Mg/yr (136 tons/yr) at an annualized cost of $6.1 million per year. This results in an incremental cost effectiveness of $49,600/Mg ($45,100/ton) of chromium emission reduction, equivalent to $22/lb of chromium emission reduction, which is comparable to approximately $30/ton of benzene emission reduction if relative cancer potency is factored in. The nationwide capital costs would increase by $22 million. There would not be a significant adverse economic impact on large platers under this alternative and facilities could afford the installation and operation of packed-bed scrubbers.

Regulatory Alternative II is more stringent than RA I for hard platers in that it would require the use of composite mesh pads for all facilities except those already controlled with packed-bed scrubbers. The incremental emission reduction of RA II compared to RA I would be 1.8 Mg/yr (1.9 tons/yr) at an incremental annualized cost of $6.1 million per year. This results in an incremental cost effectiveness of $3.4 million/Mg ($3.1 million/ton) of chromium emission reduction, equivalent to $1,600/lb of chromium emission reduction, which is comparable to approximately $2,000/ton of benzene emission reduction if relative cancer potency is factored in. The nationwide incremental capital costs would decrease by $1 million rather than increase because the capital cost for a composite mesh-pad system is lower than for a packed-bed scrubber. The economic impact of RA II on large hard platers would not be significant; they could afford the cost of installation and operation of the required controls.

Regulatory Alternative III is the most stringent alternative for large hard platers (RA's IV and V would require the same level of control) in that composite mesh-pads would be required for all facilities. The incremental emission reduction of RA III compared to RA II would be 1.2 Mg/yr (1.3 tons/yr) at an incremental annualized cost of $4.9 million per year. This results in an incremental cost effectiveness of $4.2 million/Mg ($3.8 million/ton) of chromium emission reduction, equivalent to $1,850/lb of chromium emission reduction, which is comparable to approximately $2,000/ton of benzene emission reduction if relative cancer potency is factored in. (The incremental cost effectiveness of RA III compared to RA I is $3.7 million/Mg, $3.4 million/ton, $1,700/lb of chromium, or approximately $2,000/ton of benzene reduction.) The nationwide incremental capital costs would increase by $3 million. Unlike small hard platers, large facilities would not encounter significant difficulties in obtaining funds to purchase and operate composite mesh-pad systems to replace existing packed-bed scrubbers. Thus, the cost of control for RA III for large platers would be affordable and would not result in facility closures.

Considering all these factors, the Administrator has selected RA III as the basis for the proposed MACT standard for large hard chromium electroplaters. This selection is based on consideration of the significant incremental reductions of chromium emissions that are achievable, the control costs, economic, and other environmental and energy impacts, all of which are reasonable. As discussed previously, the control cost is considered to be reasonable given the high toxicity of chromium emissions and the proximity of exposed populations to electroplating facilities.

The cumulative impacts of RA III on all hard chromium electroplaters provide further support for the decisions that were made separately for small and large platers. The economic impacts on small businesses are considered reasonable since the number of facilities that might close under RA III is estimated to be less than 2 percent (20 to 28 out of 1,540 facilities). An estimated 99 percent emission reduction from all hard chromium electroplaters is estimated nationwide by requiring use of composite mesh-pad systems on all existing large hard chromium electroplaters and packed-bed scrubbers on small platers under RA III. If RA II were required, this number would be reduced to 98 percent reduction, and if RA I were required this estimate would be further reduced to 97 percent reduction.

As discussed in section VI.A. of this preamble, the EPA developed nationwide emission and population exposure estimates associated with chromium electroplaters. EPA recognizes that there are a variety of factors that contribute to the uncertainties associated with the cancer risk assessments. However, despite these uncertainties, the estimates provide a frame of reference that is useful for judging the risk reduction associated with the proposed standard. It is in this context that the following discussion is presented.

Under baseline conditions (current control levels), hard chromium electroplaters could cause as many as 100 increased cancer cases per year in the U.S. In addition, the EPA estimates that maximum, upper-bound individual risks could range from 4 chances in 10,000 (4×10^{-4}) for small platers to one chance in 100 (1×10^{-2}) for large platers. The alternative selected for proposal, RA III, would reduce these estimates to 1 cancer case per year and risks of 4 chances in 1,000,000 (4×10^{-6})for small platers and 3 chances in 100,000 (3×10^{-5})for large platers. These estimates are provided to give perspective to the potential impact of the proposed standards. For the complete picture of risk, one would also want to consider non-cancer risks, which are discussed in section VI.6.

e. *Existing Decorative Chromium Electroplating—Chromic Acid Bath—MACT.* The control technology that represents the MACT floor, i.e., the use of fume suppressants, is the highest level of control achievable by the subcategory and is the predominant form of control being used in the industry. Therefore, all existing decorative chromium electroplating sources using chromic acid baths would be required to meet an emission limit of 0.003 mg/dscm (1.3×10^{-6} gr/dscf), which corresponds to the use of a fume suppressant, if an add-on air pollution device alone is used, or maintain a surface tension of no greater than 40 dynes/cm (2.7×10^{-3} lb_f/ft) (if wetting agents are used to control chromium emissions).

f. *Existing Decorative Chromium Electroplating—Trivalent Chromium Bath—MACT.* There are no regulatory alternatives above the MACT floor. Due to the low emission potential and the absence of any existing control for these tanks, MACT for new and existing sources is the use of the trivalent chromium process, with monitoring of surface tension. All sources would be required to maintain a surface tension of no greater than 55 dynes/cm (3.8×10^{-3} lb_f/ft) or, if an air pollution control device alone is used, meet an emission limit of 0.048 mg/dscm (2.1×10^{-5} gr/dscf).

g. *Existing Chromium Anodizing Tanks MACT.* The control technology that represents the MACT floor, i.e., the use of fume suppressants, is the highest level of control achievable by the subcategory and is currently being used extensively at existing facilities to reduce chromium emissions. Therefore, all existing chromium anodizing tanks would be required to meet an emission limit of 0.003 mg/dscm (1.3×10^{-6} gr/dscf) (if an add-on air pollution device alone is used) or maintain a surface tension of 40 dynes/cm (2.7×10^{-3} lb_f/ft) (if wetting agents are used to control chromium emissions.)

D. Selection of the Format of the Proposed Standards

Concentration, in terms of mass of chromium emitted per unit volume of air, was determined to be the most appropriate format for the standards. In selecting the format for the proposed standards, the following factors were considered: (1) The ability to ensure that the technology used to comply with the standard is at least as effective as the technology upon which the standards are based; (2) the ability to ensure that the technology selected as the basis of the standard can demonstrate compliance in all cases, if the systems are operated properly; and (3) the cost of determining compliance.

Based on the available emission test data, it was determined that the inlet hexavalent chromium concentration levels increased as the current supplied to the electroplating bath increased, but the outlet concentrations (within a given control level) did not vary significantly. Since the outlet chromium concentration within each class of control devices is relatively constant, a determination on this basis regarding a control system's performance can be readily made. A format based on concentration would also ensure that the technology selected as the basis of the standards would be required to meet the emissions limit since no data overlaps exist between classes of control devices. In addition, the outlet chromium concentration level is easy to measure, and the compliance test cost is equal to or less than that of the other formats considered. Therefore, a format based on outlet concentration was chosen to be the most appropriate format of the standard.

One concern with using concentration as a format is that dilution of the exhaust gases can be used to circumvent the standards. Dilution of the gas stream at the outlet of the control system is more of a concern than any dilution taking place at the inlet to the control systems since the control systems operate as constant outlet devices. However, this concern can be addressed by a review of the test data and permit data from a given facility. The air flow rate measured during testing should approximate the design air flow rate for the control system reported on the permit application. If the two values differ significantly, then an inspection of the control system can be made to determine if dilution air is being introduced to the system.

Another concern with using concentration as the format for the standard was that many decorative chromium and chromium anodizing tanks do not have ventilation systems available. Thus, it would be impossible to determine the concentration of the emission stream. This issue has been resolved by allowing such facilities to demonstrate compliance by measuring surface tension. The Agency has determined that a relationship exists between the emission concentration that results from applying fume suppressants and the surface tension of the electroplating solution. A chromic acid electroplating solution with a surface tension less than or equal to 40 dynes/cm is in compliance with the emission limit. A trivalent chromium electroplating solution with a surface tension less than or equal to 55 dynes/cm (3.8×10^{-3} lb_f/ft) is in compliance with the emission limit.

Other format options considered were: (1) The percent reduction; (2) the process emission rate (mass of chromium emitted per unit of production (as measured by the current input to the electroplating tank); and (3) the mass emission rate (the mass of chromium emitted per unit of time).

Percent reduction is determined from the inlet and outlet mass emission rates. As stated previously, the outlet chromium concentration is relatively constant for a given class of control equipment. Therefore, percent reduction is not a good indicator of performance because of its dependency on the inlet loading to the control device. The use of percent reduction as the format of the standards would not ensure the use of the technology selected as the basis for the standards because of the data overlaps that exist between classes of control devices. These data overlaps exist because of variations in the inlet loadings among facilities. In addition, inlet testing of the control device is not always feasible, especially at existing facilities, and the compliance cost is substantially higher than that for the other formats because testing of the control device inlet and outlet is required. Therefore, the dependency on inlet loadings, the higher compliance cost, and potential inlet testing problems make percent reduction unacceptable as the format of the standards.

The process emission rate is based on the outlet mass emission rate and the current supplied to the electroplating tank. As noted above, the outlet mass emission rate varies depending on the chromium concentration and the exhaust gas flow rate. Since the outlet concentration levels do not vary with the current loading to the electroplating tank, facilities that operate at high current loadings would have a much lower process emission rate than facilities that operate at low current loadings even though both facilities have applied the same technology and may be controlled to the same emissions level. Conversely, facilities that have a low process emission rate could have higher emissions than intended by the standards because of a high inlet loading (high current loading) to the control device. Even though the cost of compliance is equal to or less than that for other format options, the process emission rate was not selected as the format of the standards.

The mass emission rate varies depending upon the chromium concentration and the exhaust gas flow rate. The mass emission rate is easy to measure, and the compliance costs are equal to or less than that for the other format options. However, since the outlet chromium concentration is fairly independent of the production rate (inlet current loading) of the facility, the mass emission rate varies according to the exhaust gas flow rate which is a function of the size of the facility (number of electroplating tanks). This dependency results in data overlaps between the classes of control devices. To eliminate these overlaps, multiple emission limits would be required to accommodate the size variation among the facilities. Therefore, a mass emission rate limitation was not selected as the format of the standard.

E. Selection of the Emission Limits

This section presents the emissions data used to determine the emission limits for the technologies selected as the basis of the standards. For hard chromium tanks, packed-bed scrubbers and composite mesh-pad systems were selected as the basis of the standards. For decorative chromium tanks, chemical fume suppressants or the trivalent chromium process form the basis of the standards. Chemical fume suppressants also form the basis for the standard for anodizing tanks.

All of the emission limits presented below are in terms of mg of total chromium per dscm of exhaust air. During the early part of the emission test program, both hexavalent and total chromium were measured at each site. The results of these tests indicate that, considering the precision of the sampling and analytical methods used, the hexavalent and total chromium levels were essentially the same (for all tanks using a chromic acid electroplating bath solution). Therefore, it can be presumed that all of the chromium was in the hexavalent form, which would be expected, given the fact that chromic acid is a hexavalent compound of chromium. For these

reasons, total chromium analyses were discontinued for the remainder of the tests. The hexavalent chromium concentrations, however, were assumed to equal the total chromium concentrations, and all of the emission limits are expressed in terms of total chromium. In addition to the reasons cited above, the analytical method for total chromium is less expensive than that for hexavalent chromium, and most laboratories can perform total chromium analyses, but fewer laboratories perform hexavalent chromium analyses.

The numerical emission limit associated with packed-bed scrubbers is 0.03 milligram of total chromium per dry standard cubic meter (1.3×10^{-5} gr/dscf) of exhaust air. The numerical emission limit associated with composite mesh pad systems is 0.013 mg/dscm (5.7×10^{-6} gr/dscf) of exhaust air. A numerical limit of 0.003 mg/dscm (1.3×10^{-6} gr/dscf) of exhaust air was selected for chemical fume suppressants usage. A total chromium emission limit of 0.048 mg/dscm (2.1×10^{-5} gr/dscf) of exhaust air was established for the trivalent chromium process.

Based on available emissions test data and considering factors relevant to the level of controlled emissions, the Administrator has determined that the proposed emission limits are achievable in all circumstances that can be reasonably foreseen. A summary of the factors considered in the selection of the emission limits is presented in the discussion of emission test data below. Complete discussions are presented in chapter 4 of the BID and in the New Technology Report (see **ADDRESSES**).

Emission tests were conducted at 13 hard chromium electroplating facilities and 3 decorative chromium electroplating facilities. Of the 13 hard chromium electroplating facilities where tests were conducted, 3 used chevron-blade eliminators, 3 used mesh-pad mist eliminators, three used packed-bed scrubbers, 3 used composite mesh-pads in series, and 1 used a packed-bed scrubber in conjunction with a composite mesh-pad. At two of the decorative chromium facilities tested, uncontrolled emission levels were quantified, and the performance of chemical fume suppressants was evaluated. At the third decorative chromium facility, the chromium emissions from a trivalent chromium electroplating process were evaluated.

Additional data were collected from hard and decorative chromium electroplating facilities but were excluded from the data base because of process upset conditions, control equipment malfunctions, or procedural discrepancies with EPA test methods. The rationale for excluding these data is presented in Appendix D of the BID.

No chromium anodizing facilities were tested. However, a mass balance was performed to quantify uncontrolled emission levels from a scrubber used to control chromium emissions from a chromic acid anodizing tank. (For further information on this estimating procedure and the calculations involved, refer to Chapter 3 and Appendix C of the BID.)

The emissions data obtained on packed-bed scrubbers operating with periodic or continuous washdown and typical chromic acid concentrations in the scrubber water (0 to 29.9 g/L [0 to 4 oz/gal]) indicated chromium emissions ranging from 0.020 to 0.028 mg/dscm (8.7×10^{-6} to 1.2×10^{-5} gr/dscf) with an average concentration of 0.024 mg/dscm (1.1×10^{-5} gr/dscf). Using the methodology presented in section III of this preamble, packed-bed scrubbers were determined to be the MACT floor for hard chromium electroplating tanks. For packed-bed scrubbers, a total chromium emission limit of 0.03 mg/dscm (1.3×10^{-5} gr/dscf) was selected because this was the highest value obtained during any of the test runs (0.028 mg/dscm rounded to 0.03 mg/dscm). Based on tests the Agency has conducted on mesh-pad mist eliminators used at some hard chromium electroplating tanks, this emission limit could probably also be achieved by those devices.

The emissions data obtained on composite mesh-pads, either used in series or in conjunction with a packed-bed scrubber, indicated total chromium emissions ranging from 0.004 to 0.013 mg/dscm (1.7×10^{-6} to 5.7×10^{-6} gr/dscf), with an average concentration of 0.009 mg/dscm (3.9×10^{-6} gr/dscf). A total chromium emission limit of 0.013 mg/dscm (5.7×10^{-6} gr/dscf) was selected for composite mesh-pads because this value was the highest obtained during any of the test runs.

Two types of chemical fume suppressants were tested at decorative chromium electroplating facilities using a chromic acid bath—a foam blanket and a combination foam blanket and wetting agent. The only data considered in establishing the emission limit were those for the combination foam blanket and wetting agent. The emissions data based on the use of a foam blanket alone were excluded because this control technique was considered to be less effective than the combination foam blanket and wetting agent, as stated in section VI.B.5. The test data for chemical fume suppressants indicated chromium emissions ranging from 0.001 to 0.003 mg/dscm (4.4×10^{-7} to 1.3×10^{-6} gr/dscf), with an average concentration of 0.002 mg/dscm (8.7×10^{-7} gr/dscf). The total chromium emission limit selected for chemical fume suppressants is 0.003 mg/dscm (1.3×10^{-6} gr/dscf), which was the highest value obtained during the test runs.

Source testing of a decorative chromium electroplating operation that uses a trivalent chromium electroplating process was also conducted by EPA. Total chromium emissions from this operation ranged from 0.013 to 0.048 mg/dscm (5.7×10^{-6} to 2.1×10^{-5} gr/dscf), with an average total chromium concentration of 0.027 mg/dscm (1.2×10^{-5} gr/dscf). The emission limit that was selected for these tanks is 0.048 mg/dscm (2.1×10^{-5} gr/dscf), which was the highest value obtained during any of the test runs.

Some facilities that use chemical fume suppressants in their electroplating or anodizing baths do not have ventilation systems; thus, emission testing of these systems is not possible. The Agency has determined that another parameter, surface tension, can be measured to determine compliance with the emission limits. This alternate parameter can be used when wetting-agent-type fume suppressants or combination foam-blanket/wetting-agent-type fume suppressants are used and a ventilation system is not present. If a wetting agent or a combination foam blanket/wetting agent is used to control emissions, then the surface tension of the electroplating or anodizing bath must be monitored by using a stalagmometer to ensure that the surface tension is at or below 40 dynes/cm (2.7×10^{-3} lb_f/ft).

If a trivalent chromium electroplating process is used to control emissions, then the surface tension of the electroplating bath must be monitored by using a stalagmometer or tensiometer to ensure that the surface tension is at or below 55 dynes/cm (3.8×10^{-3} lb_f/ft). In both cases, the surface tension should be measured at least once every 4 hours.

F. Selection of Definition of Source

The choice of an affected source influences possible reconstruction and modification impacts of the standards. It also determines the point at which the addition or replacement of individual emission sources (i.e., electroplating or anodizing tanks) results in a "new" source. Section 112(a)(3) of the Act defines "stationary source" as having the same meaning as that given in section 111(a) of the Act, where "stationary source" is defined as "any building, structure, facility, or installation which emits or may emit any air pollutant." Most industrial

plants consist of numerous pieces or groups of equipment that emit HAP and that may be viewed as "sources." The EPA, therefore, uses the term "affected source" to designate the equipment within a particular kind of plant that is chosen as the "source" covered by a given standard.

1. Reconstruction Considerations

In designating the affected source, EPA determines which piece or group of equipment is the appropriate unit (the affected source) for emission standards in the particular context involved. The determination is made in light of the terms and purpose of section 112. One major consideration is that a narrow designation of source usually brings replacement equipment under new source MACT sooner.

If, for example, an entire plant is designated as the affected source, the new source MACT would cover no part of the plant unless the replacement causes the entire plant to be "reconstructed." Reconstruction, as defined in the proposed § 63.5, means the replacement of the components of an affected source to such an extent that: (1) The fixed capital cost of the new components exceeds 50 percent of the fixed capital cost that would be required to construct a comparable new source, and (2) it is technologically and economically feasible for the reconstructed source to meet the promulgated emission standards established by the Administrator pursuant to section 112 of the Act.[6] Upon reconstruction, an affected major source is subject to relevant standards for new sources, including compliance dates, irrespective of any change in emissions of HAP from that source. Major sources are also subject to the preconstruction and review requirements provided in § 63.5, provided the source commenced reconstruction after proposal but does not start operation before promulgation of the final standards.

On the other hand, if each piece of equipment (i.e., each electroplating or anodizing tank) is designated as an affected source, then any single tank can be subject to the reconstruction provision (if the tank is located at a major source). A narrow designation of the affected source would ensure that the standards would cover reconstructed emissions sources (i.e., individual tanks) with new source MACT with each replacement or reconstruction of a tank. A broader designation of the affected source may be appropriate if it would: (1) Result in equal or greater emission reduction than would a narrow designation or (2) avoid inordinate costs or other adverse impacts.

2. Modification Considerations

According to section 112(a)(5), "modification" means any physical change in, or change in the method of operation of, a major source which increases the actual emissions of any hazardous air pollutant emitted by such source by more than a de minimis amount or which results in the emission of any hazardous air pollutant not previously emitted by more than a de minimis amount. Modified sources are subject to section 112(g) provisions, which prevent any person from modifying a major source of HAP unless the MACT emission limitation for existing sources will be met. If modifications of major sources occur prior to the establishment of final rules under section 112(d), the States are required to establish MACT for the modified sources on a case-by-case basis. Therefore, until promulgation, the source designation will be determined on a case-by-case basis by the permitting authority.

The EPA has reserved space within the proposed General Provisions for provisions related to section 112(g) that will be added in a separate rulemaking. Until EPA guidance on this issue is available, it is difficult to project the potential impact an affected source designation could have on the industry that is the subject of today's rulemaking. However, since only major sources are affected under section 112(g), the impact is probably limited because the majority of electroplating facilities will be considered area sources.

3. Affected Source Definitions

There are three alternative designations that could be applied to the source category. The narrowest designation would be each individual electroplating or anodizing tank. The broadest designation would be the group of electroplating or anodizing tanks at each facility that are covered by the standards. A third possibility is the designation of groups of electroplating tanks by category or subcategory; in other words, affected sources would be: (1) All hard chromium electroplating tanks, (2) all decorative chromium electroplating tanks using chromic acid baths, (3) all decorative chromium electroplating tanks using trivalent chromium baths, and (4) all chromic acid anodizing tanks.

With the exception of hard chromium electroplating tanks, the new and existing source MACT is the same for the remaining sources. In addition, the preconstruction review requirements for decorative platers and anodizers should be relatively easy to meet because of the relative simplicity and availability of the means of control, i.e., the use of fume suppressants or, as applicable, the use of a trivalent chromium electroplating bath. However, because new source MACT is more stringent than existing source MACT for small hard chromium electroplaters and because the emission limits assume the use of add-on control devices, the impact of an affected source designation is more significant to hard chromium electroplaters. Therefore, EPA based the designation decision on the potential impacts to this source category.

The EPA is proposing to define the affected source in terms of individual tanks. The narrow designation maximizes the potential emission reduction from the source categories. Defining the affected source as an individual tank ensures that new source MACT is applied to new hard chromium electroplating tanks. However, if a new tank is added at an existing source, emissions from the new tank could be ducted to an existing control device on site as long as the emissions from the new tank do not exceed the required emission levels. If the tank is added at a major source, the preconstruction review provisions would be triggered. The preconstruction review requirements are extensive in that the source would be required to perform an emission test to establish the emission rate expected. However, because these provisions only apply to major sources and this industry is comprised largely of area sources, the potential impact of this scenario is small.

As indicated by the discussion above, EPA believes that a narrow definition of source based on individual tanks represents the most reasonable approach given typical plant design and that the additional costs of this approach are generally minimal. EPA requests comments on the effect of adopting a narrow definition of source and on its proposal to define the affected source as each individual tank.

G. Selection of Monitoring Requirements

The amended Act added paragraph (3) to section 114(c). This paragraph requires enhanced monitoring of stationary sources (or possibly other sources) to indicate the compliance status of the source, and whether compliance is continuous or intermittent. Today's rulemaking also identifies monitoring parameters that indicate proper operation and

[6] Ibid.

maintenance (O&M) of the control device. The following paragraphs describe the enhanced compliance monitoring and the O&M monitoring, and the bases for their selection.

1. Enhanced Compliance Monitoring

In accordance with § 63.7 of the General Provisions for this part, each source subject to these standards would be required to conduct an initial performance test.[7] The Act requires that after the initial performance test, the compliance status of the source must be demonstrated. For this source category, EPA has decided that certain operating parameters should be monitored to indicate ongoing compliance with the emission limit.

For packed-bed scrubbers and composite mesh-pads used in conjunction with packed-bed scrubbers, the gas velocity at the inlet of the device and the chromium concentration of the scrubber-water have been selected as those operating parameters that are most indicative of control device performance. (The importance of these parameters was discussed in section V.B.) Therefore, during the initial performance test, the owner or operator would be required to set the range of values for gas velocity at the inlet to the control device that corresponds to compliance with the emission limit set by the proposed standards. These standards would require daily measurement of gas velocity to ensure compliance with the emission limit. Operation of the control device outside of the gas velocity range established during the performance test would constitute noncompliance with the emission limit. Additionally, facilities using packed-bed scrubbers would be required to measure the scrubber water concentration once daily. If the scrubber water concentration exceeds 45 g/L (6 oz/gal), the owner or operator would not be in compliance with the emission limit. As an alternative to compliance with this scrubber water concentration, the owner or operator may establish a maximum scrubber water concentration that corresponds to compliance with the emission limit during the initial performance test. Because gas velocity and scrubber water concentration are not highly variable when the add-on control device is properly operated and maintained, the EPA believes that a daily measurement of gas velocity and scrubber water concentration is sufficient to indicate continued compliance with the emission limit. Violation of either of these operating parameters would constitute noncompliance with the emission limit.

For mesh-pad mist eliminators (that meet the total chromium emission limit of 0.03 mg/dscm (1.3×10^{-5} gr/dscf)), and for composite mesh-pads, the daily measurement of gas velocity alone would indicate compliance or noncompliance with the emission limit. The operating parameter value for gas velocity that corresponds to compliance with the emission limit would be established during the initial performance test.

2. Alternate Compliance Monitoring for Sources Using Fume Suppressants

For tanks that comply with the standards through the use of chemical fume suppressants, the measurement of surface tension every 4 hours would indicate compliance or noncompliance with the standards. Decorative chromium tanks using a chromic acid electroplating process would be required to maintain a surface tension no greater than 40 dynes/cm (2.7×10^{-3} lb_f/ft); those using a trivalent chromium electroplating process would be required to maintain a surface tension no greater than 55 dynes/cm (3.8×10^{-3} lb_f/ft). Operation of the electroplating baths at surface tensions greater than the values identified in these standards would indicate noncompliance with the emission limit. Owners or operators who choose to comply with these surface tension limits would not be required to conduct an initial performance test. Those decorative chromium tanks that use a chemical fume suppressant in conjunction with a control device may conduct an initial performance test to establish an alternative surface tension value that corresponds to compliance with the emission limit.

The Agency has determined that measurement of the surface tension of the bath (using a stalagmometer or tensiometer) at least once every 4 hours during operation of the tank would be sufficient to ensure continuous compliance with the emission limit. The time interval specified for measuring the surface tension is based on the time interval at which additions of wetting agent were required during the emission test program conducted to develop these standards. The time intervals for addition requirements would vary with each operation (e.g., size of tank, current density, configuration of parts, etc.).

The owner or operator of a tank that uses a foam blanket alone to comply with the standards would be required to conduct an initial performance test to confirm that the emission limit of 0.003 mg/dscm (1.3×10^{-6} gr/dscf) is being met. For ongoing compliance, the owner or operator would be required to measure and record the foam blanket thickness at least once every hour during operation of the tank. Operation of the electroplating tank at a foam blanket thickness less than the level established during the performance test or 2.54 cm (1 in.) (whichever is greater), would constitute noncompliance with the standards.

The owner or operator of a tank that uses a trivalent chromium electroplating bath would be required by the standard to monitor the surface tension using a stalagmometer every 4 hours. Operation of the electroplating tank at surface tensions above 55 dynes/cm (3.8×10^{-3} lb_f/ft) would constitute noncompliance with the standards.

3. Operation and Maintenance Monitoring

Section 63.6(e) of the proposed General Provisions identifies operation and maintenance requirements, which include the preparation of a startup, shutdown, and malfunction plan.[8] In addition, specific operation and maintenance monitoring would be required by the proposed standards.

An owner or operator who operates a control device to ensure compliance with the standards would be required to prepare an operation and maintenance plan that must include, at a minimum, a standardized checklist to document the operation and maintenance of the equipment, a systematic procedure for identifying and reporting malfunctions, and procedures to ensure that equipment or process malfunctions due to poor maintenance or other preventable conditions do not occur. Owners or operators of decorative chromium electroplating tanks who choose to demonstrate compliance by adhering to the surface tension limits required by these standards (not those established during an initial performance test) would not be subject to the operation and maintenance monitoring requirements. Specific requirements for the operation and maintenance plan are in § 63.115 of the proposed standards.

H. Selection of Test Methods

Test Methods 306 and 306A, "Determination of Chromium Emissions from Decorative and Hard Chromium Electroplating and Anodizing Operations," are the proposed methods for determining compliance with the emission standards. Test Method 306B, "Surface Tension Measurement and Recordkeeping for Tanks used at

[7] Ibid.

[8] Ibid.

Chromium Electroplating and Anodizing Facilities," is the proposed method for monitoring surface tension at decorative chromium electroplating and chromic acid anodizing facilities. All three methods are proposed for addition to Appendix A of 40 CFR part 63.

Methods 306 and 306A were developed for measurement of chromium emissions from chromium electroplating facilities. Method 306 is based on Method 5 (40 CFR part 60, Appendix A) and utilizes isokinetic sampling. The major modifications to Method 5 to yield Method 306 include elimination of the filter, use of an alkaline impinger reagent for sample collection, and sample analysis by the tester's choice of graphite furnace atomic absorption spectrometry or inductively-coupled argon plasma emission spectrometry. Both analytical techniques produce results for the total chromium concentration of the emission sample.

Method 306A is a simplified, constant sampling rate method for measurement of chromium emission from electroplating facilities, which offers owners and operators a less expensive means to demonstrate compliance than Method 306. Collection of a representative sample without isokinetic sampling is achieved by varying the sampling time at each traverse point and limiting the particle size of the sampled emissions to 10 micrometers. Sample analysis for Method 306A is identical to that for Method 306. When correctly applied, the precision and bias of Method 306A have been demonstrated to be comparable to those of Method 306.

Method 306B provides procedures for measuring the surface tension of plating or anodizing tank baths when a wetting agent is used for emission control. The method offers the option for use of two generally accepted surface tension measurement devices, a stalagmometer or a tensiometer.

I. Selection of Reporting and Recordkeeping Requirements

The owner or operator of any source subject to these standards would be required to fulfill all reporting requirements outlined in 40 CFR 63.10.[9]

An owner or operator of a source who uses an add-on air pollution control device to meet these standards would also be required to maintain records of daily and monthly inspections, daily gas velocity readings, daily scrubber water concentrations, daily washdowns, daily pressure drop readings, and any emission tests at the facility. These records should be maintained for a minimum of 5 years. Each inspection record would identify the device inspected and include the following: the date and approximate time of inspection, a brief description of the working condition of the device during the inspection, the gas velocity, the scrubber water concentration, the pressure drop, and any actions taken to correct deficiencies found during the inspection. Each record of washdown would identify the device and include the date, approximate time, and duration of the washdown.

An owner or operator of a source who uses a fume suppressant to comply with these standards would be required to maintain the following records at the facility for at least 5 years: (1) The amounts of fume suppressants purchased (invoices); (2) the frequency of maintenance additions; (3) the amount of material added during each maintenance addition; (4) the surface tension of the bath or the foam blanket thickness; and (5) any emission tests to assure compliance with the standard. Each record of a surface tension measurement would identify the tank and include the date, approximate time, measured surface tension, and whether any additions were made to the bath. Each record of a foam blanket thickness measurement would be required to identify the tank and include the date, approximate time, measured thickness, and whether any additions were made to the bath. If an addition was made, the amount of material added would also be recorded.

An owner or operator of a source who uses a trivalent chromium electroplating process would be required to maintain the following records at the facility for at least 5 years: (1) The amount of bath additive containing wetting agent purchased (invoices); (2) the surface tension of the bath; and (3) any emission tests to assure compliance with the standard. Each record of a surface tension measurement would identify the tank and include the date, approximate time, measured surface tension, and whether any additions were made to the bath.

All records of inspections, washdowns, pressure drop readings, emission tests, foam blanket and surface tension measurements, frequency of fume suppressant maintenance additions, the amount of fume suppressant added during each maintenance addition, and purchases of fume suppressants would be maintained at the facility for a minimum of 5 years. The operation and maintenance plan (associated with add-on pollution control devices) would be maintained at the facility for the life of the device. The Administrator believes that the above reporting and recordkeeping requirements are adequate to ensure that owners or operators are complying with the provisions of the proposed standards.

J. Operating Permit Program

Under the operating permit regulations codified at 40 CFR part 70, any source that is a major source under the Act or any nonmajor source subject to a standard under sections 111 or 112 of the Act must obtain an operating permit. (See § 70.3(a)(1).) The part 70 regulations also provide that a State may, at its discretion, defer all nonmajor sources from the obligation to obtain a part 70 permit until such time as the EPA finishes a rulemaking regarding the applicability of the part 70 program to nonmajor sources. Part 70 further provides that, for nonmajor sources subject to a future standard promulgated under section 111 or 112, "* * * the Administrator will determine whether to exempt any or all such applicable sources from the requirements to obtain a part 70 permit at the time that the new standard is promulgated." (See § 70.3(b)(1) and (2).)

The proposed rule for chromium electroplating and anodizing tanks would not exempt area sources from permitting requirements. The EPA believes that permitting these nonmajor sources will enhance the implementation and enforcement of the rule by clarifying how the rule applies to a particular source, and how relevant parts of the to be promulgated general provisions apply to chromium electroplating and anodizing tanks. The proposed general provisions are generic requirements that sources subject to section 112 standards must meet.[10]

However, under the existing provisions of part 70, States may choose to defer the obligation of all nonmajor sources to obtain a permit until the EPA "completes a rulemaking to determine how the program should be structured for nonmajor sources and the appropriateness of any permanent exemptions * * *." In promulgating the permits rule, the EPA committed to complete that rulemaking within 5 years after the approval of the first State part 70 program that defers permitting of nonmajor sources.

The EPA believes, for the same reasons stated in the preamble to the operating permits rule, that the benefits to be gained from the permitting of nonmajor sources subject to this

[9] Ibid.

[10] Ibid.

proposed rule are not likely to accrue during the early stages of the permit program when permitting authorities will be occupied with the task of issuing permits to major sources. Once this task is complete, however, permitting authorities should be able to process permits for nonmajor sources subject to this rule on a relatively expedited basis. This expedited review should be the case, in part, because of the presumptive suitability of these sources for general permits.

K. Solicitation of Comments

The Administrator specifically requests comments on the topics discussed in this section. Commenters should provide available data and rationale to support their comments on each topic.

1. Surface Tension Limit for Decorative Chromium Electroplating Tanks Using a Trivalent Chromium Electroplating Process

The EPA specifically requests comments on the proposed surface tension limit of 55 dynes/cm (3.8×10^{-3} lb_f/ft) for those decorative chromium electroplating tanks using a trivalent chromium electroplating process. This limit was selected by EPA based on the test data available (see section IV.C.2.c), which indicate that the value of surface tension achievable in a trivalent chromium electroplating bath is a maximum of 55 dynes/cm (3.8×10^{-3} lb_f/ft). The surface tension achievable in a given trivalent chromium bath will be dependent on the specific chemistry of that bath. Therefore, a lower surface tension may be achievable. Alternatively, a source may have difficulty lowering the surface tension of its trivalent chromium electroplating bath to 55 dynes/cm (3.8×10^{-3} lb_f/ft). Although the available data indicate that a value of 55 dynes/cm (3.8×10^{-3} lb_f/ft) is the most reasonable to select as the maximum surface tension of a trivalent chromium electroplating bath, the Administrator welcomes data that indicate that an alternate surface tension limit is more appropriate.

2. Use of Trivalent Chromium Electroplating Process

As discussed in sections V.A.2 and V.B.5, the trivalent chromium electroplating process is considered an effective pollution prevention technique. The use of a trivalent chromium electroplating process results in less total chromium in process wastewaters and less sludge generation than would result from a chromic acid electroplating process. Also, hexavalent chromium emissions are reduced by greater than 99 percent when the trivalent chromium electroplating process is used instead of an uncontrolled chromic acid bath.

During development of the proposed standards, EPA considered requiring the trivalent chromium electroplating process as a control technique for new decorative chromium electroplating tanks because of its pollution prevention aspects and its low hexavalent chromium emissions. However, results of a source test indicated that total chromium emissions were greater than those from a well-controlled chromic acid bath even though hexavalent chromium emissions were much lower. These limited source test data do not support requiring the trivalent chromium electroplating process for all new decorative chromium electroplating tanks. Therefore, new decorative chromium electroplating sources would be allowed by the proposed rule to use either the chromic acid process with fume suppressants and bath surface tension monitoring or the trivalent process with bath surface tension measuring. However, the EPA encourages new decorative chromium electroplating sources to use the trivalent process because of its overall multi-media benefits. The Administrator requests comments on whether the trivalent process should be required for new sources in the final rule and welcomes any data related to emissions of total and hexavalent chromium from the use of a trivalent chromium electroplating process.

3. Proposed Standards for Small Hard Chromium Electroplaters

Comments are specifically requested on the level of the proposed standards for small hard chromium electroplaters [0.03 mg/dscm (1.3×10^{-5} gr/dscf)]. Comments should indicate whether the proposed level is appropriate given the consideration of factors discussed in section VI.C.5 of this preamble and why.

4. Requirements for Recirculating Scrubber Water

In considering the cross-media impacts of the proposed standards, EPA identified a potential need for further regulation: the wastewater from packed-bed scrubbers and composite mesh pads used to comply with the emission limits. To minimize the water pollution impact from these control devices, it may be appropriate to require that the wastewater be routed back to the chromium bath in one of two ways before its eventual discharge: (1) The rule could require that packed-bed scrubber water be recirculated within the control device until the chromium concentration reaches a certain level (pursuant to the concentration limits in the proposed rule) and then the water could be reused in the bath or discharged; or (2) the rule could require that scrubber water be recirculated and routed back to the bath as makeup water (in the case of composite mesh pads, there is only washdown water; this would have to be sent back to the bath). Under the latter option, discharge of the wastewater would not be allowed.

The Agency has identified several issues associated with these requirements. First, there is some uncertainty as to whether EPA has authority under section 112(d) of the Act to set a zero discharge requirement for wastewater from control devices. This uncertainty exists because a zero wastewater discharge requirement would not result in an air emission reduction (chromium in wastewater will not become airborne) even though it will ensure minimal water pollution impacts. Second, some sources have indicated that they cannot route scrubber or washdown water back to the plating tanks because there is too much metal contamination. This is especially the case with older control devices; the materials of construction could lead to increased concentrations of iron and lead in the water. Third, sources will already have an incentive to recycle and reuse wastewater as much as possible to avoid costly treatment of wastewater prior to discharge.

Due to these issues, the proposed rule does not address wastewater discharges. However, EPA specifically requests comments on limiting or prohibiting wastewater discharges in the standard and any data on why this is or is not reasonable.

VII. Administrative Requirements

A. Public Hearing

A public hearing will be held, if requested, to discuss the proposed standards in accordance with section 307(d)(5) of the Act. Persons wishing to make oral presentation on the proposed standards for chromium emissions from hard and decorative chromium electroplating and chromium anodizing tanks should contact EPA at the address given in the **ADDRESSES** section of this preamble. Oral presentations will be limited to 15 minutes each. Any member of the public may file a written statement before, during, or within 30 days after the hearing. Written statements should be addressed to the Air Docket Section address given in the **ADDRESSES** section of this preamble, and should refer to Docket No. A–88–02.

A verbatim transcript of the hearing and written statements will be available for public inspection and copying during normal working hours at EPA's Air Docket Section in Washington, DC (see **ADDRESSES** section of this preamble).

B. Docket

The docket is an organized and complete file of all the information submitted to or otherwise considered by EPA in the development of this proposed rulemaking. The principal purposes of the docket are: (1) To allow interested parties to readily identify and locate documents so that they can intelligently and effectively participate in the rulemaking process, and (2) to serve as the record in case of judicial review [except for interagency review materials (section 307(d)(7)(A))].

C. Executive Order 12866

Under Executive Order 12866 (58 FR 51736 (October 4, 1993)), the Agency must determine whether the regulatory action is "significant" and therefore subject to Office of Management and Budget (OMB) review and the requirements of the Executive Order. The Order defines "significant regulatory action" as one that is likely to result in a rule that may:

(1) Have an annual effect on the economy of $100 million or more or adversely affect in a material way the economy, a sector of the economy, productivity, competition, jobs, the environment, public health or safety, or State, local, or tribal governments or communities,

(2) Create a serious inconsistency or otherwise interfere with an action taken or planned by another agency,

(3) Materially alter the budgetary impact of entitlements, grants, user fees, or loan programs or the rights and obligations of recipients thereof; or

(4) Raise novel legal or policy issues arising out of legal mandates, the President's priorities, or the principles set forth in the Executive Order.

Pursuant to the terms of Executive Order 12866, OMB has notified EPA that this action is a "significant regulatory action" within the meaning of the Executive Order. For this reason, this action was submitted to OMB for review. Changes made in response to OMB suggestions or recommendations will be documented in the public record.

D. Paperwork Reduction Act

The information collection requirements in this proposed rule have been submitted for approval to OMB under the Paperwork Reduction Act, 44 U.S.C. 3501 *et seq.* An Information Collection Request document has been prepared by EPA (ICR No. 1611) and a copy may be obtained from Sandy Farmer, Information Policy Branch, U. S. Environmental Protection Agency, 401 M Street SW., (2136), Washington, DC 20460 or by calling (202) 260–2740. The public reporting burden for this collection of information is estimated to average 103 hours per source for reporting annually over the first 3 years and 253 hours per source for recordkeeping annually. This includes time for reviewing instructions, searching existing data sources, gathering and maintaining the data needed, and completing and reviewing the collection of information.

Send comments regarding the burden estimate or any other aspect of this collection of information, including suggestions for reducing this burden, to Chief, Information Policy Branch, 2136, U. S. Environmental Protection Agency, 401 M Street SW., Washington, DC 20460; and to the Office of Information and Regulatory Affairs, Office of Management and Budget, Washington, DC 20503, marked "Attention: Desk Officer for EPA." The final rule will respond to any OMB or public comments on the information collection requirements contained in this proposal.

E. Regulatory Flexibility Act

The Regulatory Flexibility Act (5 U.S.C. 601 *et seq.*) requires EPA to consider potential impacts of proposed regulations on small business "entities." If a preliminary analysis indicates that a proposed regulation would have a significant economic impact on 20 percent or more of small entities, then a regulatory flexibility analysis must be prepared.

The EPA's 1982 Regulatory Flexibility Act guidelines indicate that an economic impact should be considered significant if it meets one of the following criteria:

(1) Annual compliance costs increase the total cost of production for small entities by more than 5 percent;

(2) Compliance costs as a percentage of sales for small entities are at least 10 percent more than compliance costs as a percentage of sales for large entities;

(3) Capital costs of compliance represent a significant portion of capital available to small entities, considering internal cash flow plus external financial capabilities; and

(4) The requirements of the regulation are likely to result in closures of small entities.

Using the Small Business Administration's definition of a small business for SIC Code 3471 of less than 500 employees, it has been determined that none of the above criteria are triggered. In the hard electroplating source category the number of small businesses is estimated to be 1,170. None of the regulatory alternatives considered will significantly impact 20 percent of this population. For example, the estimated number of small entity closures ranges from less than 2 percent for RA I to less than 5 percent for RA IV. As for decorative electroplating and anodizing tanks, the low annualized compliance costs associated with the RA's would not cause any of the criteria for a significant impact to be triggered.

Pursuant to the provisions of 5 U.S.C. 605(b), I hereby certify that this proposed rule, if promulgated, will not have a significant economic impact on a substantial number of small business entities.

F. Miscellaneous

In accordance with section 117 of the Act, publication of this proposal was preceded by consultation with appropriate advisory committees, independent experts, and Federal departments and agencies. The Administrator will welcome comments on all aspects of the proposed regulation, including economic and technological issues, and on the proposed test methods.

This regulation will be reviewed 8 years from the date of promulgation. This review will include an assessment of such factors as evaluation of the residual health risks, any overlap with other programs, the existence of alternative methods, enforceability, improvements in emission control technology and health data, and reporting and recordkeeping requirements.

List of Subjects in 40 CFR Part 63

Environmental protection, Air pollution control, Hazardous substances, Reporting and recordkeeping requirements.

Dated: November 30, 1993

Carol M. Browner,

Administrator.

It is proposed that part 63, chapter I, title 40 of the Code of Federal Regulations be amended as follows:

PART 63—[AMENDED]

1. The authority citation for part 63 continues to read as follows:

Authority: 42 U.S.C. 7401 *et seq.*

2. By adding a new subpart N, consisting of §§ 63.340–63.347, to read as follows:

Subpart N—National Emission Standards for Chromium Emissions From Hard and Decorative Chromium Electroplating and Chromium Anodizing Tanks

Sec.
63.340 Applicability and designation of sources.
63.341 Definitions.
63.342 Standards.
63.343 Compliance and performance testing.
63.344 Test methods and procedures.
63.345 Monitoring requirements.
63.346 Recordkeeping requirements.
63.347 Reporting requirements.

Subpart N—National Emission Standards for Chromium Emissions From Hard and Decorative Chromium Electroplating and Chromium Anodizing Tanks

§ 63.340 Applicability and designation of sources.

The affected source to which the provisions of this subpart apply is each electroplating or anodizing tank at facilities performing hard chromium electroplating, decorative chromium electroplating, or chromium anodizing.

§ 63.341 Definitions.

Terms used in this subpart are defined in the Clean Air Act, in subpart A of part 63, or in this section as follows:[1]

Affected source means the chromium electroplating or anodizing tank.

Air pollution control device means equipment used to collect and contain chromium emissions from chromium electroplating and anodizing tanks.

Anodizing means the surface treatment of metals, particularly aluminum, where the part to be anodized serves as the anode and an oxide film is produced on the surface of the base metal.

Base metal means the metal or metal alloy the workpiece is composed of.

Chemical fume suppressant means any chemical agent that reduces or suppresses fumes at the surface of an electroplating or anodizing bath.

Chromic acid means the common name for chromium anhydride (CrO_3).

Chromium anodizing means the process by which an oxide layer is produced on the surface of a base metal using a chromic acid solution.

Chromium electroplating means the process by which a layer of chromium metal is electrodeposited on a base metal or plastic.

Composite mesh-pad system means an air pollution control device typically consisting of several stages. The purpose of the first stage is to remove large particles. Smaller particles are removed in the second stage, which consists of the composite mesh-pad. A final stage may remove any reentrained particles not collected by the composite mesh-pad.

Decorative chromium electroplating means the process by which a thin layer of chromium is electrodeposited on a base metal or plastic to provide a bright surface with wear and tarnish resistance.

Electroplating means the electrodeposition of an adherent metallic coating upon an electrode (workpiece) to secure a surface with properties different from those of the base metal.

Electroplating or anodizing bath means the electrolytic solution used as the conducting medium in which the flow of current is accompanied by movement of metal ions for the purposes of electroplating metal out of the solution onto a base metal or plastic or for oxidizing the base metal.

Electroplating or anodizing tank means the receptacle or container in which electroplating or anodizing occurs.

Facility means all contiguous or adjoining property that is under common ownership or control, including properties that are separated only by a road or other public right-of-way, in which hard chromium electroplating or chromium anodizing is performed.

Foam blanket means the type of chemical fume suppressant that generates a layer of foam across the surface of a solution when current is applied to that solution.

Gas velocity means the velocity of the inlet gas stream to the air pollution control device.

Hard chromium electroplating means a process by which a thick layer of chromium is electrodeposited on a base metal to provide a surface with wear resistance, a low coefficient of friction, hardness, and corrosion resistance.

Hexavalent chromium means the form of chromium in a valence state of +6.

Large hard chromium electroplating facility means a facility that performs hard chromium electroplating and has a maximum cumulative potential rectifier capacity greater than or equal to 60 million ampere-hours per year (Ah/yr).

Maximum cumulative potential rectifier capacity means the summation of the total installed rectifier capacity at a facility, expressed in amperes, multiplied by an operating schedule of 8,400 hours per year and 0.7, which assumes that electrodes are energized 70 percent of the total operating time.

Operating parameter value means a minimum or maximum value established for a control device or process parameter which, if achieved by itself or in combination with one or more other operating parameter values, determines that an owner or operator has complied with an applicable emission limitation or standard.

Packed-bed scrubber means an air pollution control device consisting of a single or double packed-bed that contains packing media on which the chromic acid droplets impinge. The packed-bed section of the scrubber is followed by a mist eliminator to remove any water entrained from the packed-bed section.

Small hard chromium electroplating facility means a facility that performs hard chromium electroplating and has a maximum cumulative potential rectifier capacity less than 60 million Ah/yr.

Stalagmometer means the device used to measure the surface tension of a solution. A tensiometer may also be used.

Surface active agent means any soluble or colloidal substance that, even when present in very low concentrations, affects markedly the surface tension of solutions.

Surface tension means the property, due to molecular forces, that exists in the surface film of all liquids and tends to prevent liquid from spreading.

Trivalent chromium means the form of chromium in a valence state of +3.

Trivalent chromium process means the process used for electrodeposition of a thin layer of chromium onto a base metal using a trivalent chromium solution instead of a chromic acid solution.

Wetting agent means any substance that reduces the surface tension of a liquid.

Workload means the amount of material or parts processed in the electroplating or anodizing tank at a given time.

Workpiece means the material being plated, anodized, or otherwise finished.

§ 63.342 Standards.

(a) *Standards for hard chromium electroplating tanks.* On and after the date on which the initial performance test is completed or is required to be completed under § 63.7, whichever date is earlier, no owner or operator of an existing or new affected source shall cause to be discharged into the atmosphere from that affected source any gases that contain chromium emissions in excess of:

(1) 0.013 milligrams of total chromium per dry standard cubic meter (mg/dscm) of ventilation air (5.7×10^{-6}

[1] The EPA proposed regulations for subpart A of 40 CFR part 63 published in the Federal Register on August 11, 1993 at 58 FR 42760.

grains per dry standard cubic foot [gr/dscf]); or

(2) 0.03 mg/dscm (1.3×10^{-5} gr/dscf) if the electroplating tank is an existing source and is located at a small hard chromium electroplating facility.

(b) *Standards for decorative chromium electroplating tanks using a chromic acid bath.* On and after the compliance date identified in § 63.343, no owner or operator of an existing or new affected source shall allow:

(1) The concentration of chromium in the exhaust gas stream discharged to the atmosphere to exceed 0.003 mg/dscm (1.3×10^{-6} gr/dscf) if an air pollution control device is the sole means of reducing emissions; or

(2) The surface tension of the electroplating bath to exceed 40 dynes per centimeter (dynes/cm) (2.7×10^{-3} pound-force per foot (lb_f/ft)) at any time during operation of the tank if fume suppressants are used in the plating bath.

(c) *Standard for decorative chromium electroplating tanks using a trivalent chromium bath.* On and after the compliance date identified in § 63.343, no owner or operator of an existing or new affected source shall allow:

(1) The concentration of chromium in the exhaust gas stream discharged to the atmosphere to exceed 0.048 mg/dscm (2.1×10^{-5} gr/dscf) if an air pollution control device is the sole means of reducing emissions; or

(2) The surface tension of the electroplating bath to exceed 55 dynes/cm (3.8×10^{-3} lb_f/ft) at any time during operation of the tank if fume suppressants are used in the plating bath.

(d) *Standards for chromium anodizing tanks.* On and after the compliance date identified in § 63.343, no owner or operator of an existing or new affected source shall allow:

(1) The concentration of chromium in the exhaust gas stream-discharged to the atmosphere to exceed 0.003 mg/dscm (1.3×10^{-6} gr/dscf) if an air pollution control device is the sole means of reducing emissions; or

(2) The surface tension of the chromium anodizing bath to exceed 40 dynes/cm (2.7×10^{-3} lb_f/ft) at any time during operation of the tank if fume suppressants are used in the plating bath.

(e) *Operation and maintenance plan.* The owner or operator of an affected source that uses an air pollution control device to control emissions of chromium from the electroplating or anodizing tank shall prepare a startup, shutdown, malfunction plan in accordance with § 63.6 of subpart A. The plan shall be implemented within 90 days after the effective date of this subpart and shall also include the following provisions:

(1) The plan shall specify the operation and maintenance criteria for the air pollution control device and shall include a standardized checklist to document the operation and maintenance of the equipment;

(2) The plan shall include a systematic procedure for identifying malfunctions and for reporting them immediately to supervisory personnel; and

(3) The plan shall specify procedures to be followed to ensure that equipment or process malfunctions due to poor maintenance or other preventable conditions do not occur.

(f) The provisions of paragraph (e) of this section do not apply to an owner or operator who complies with these standards by meeting the surface tension limits in paragraphs (b)(2), (c)(2), and (d)(2) of this section.

§ 63.343 Compliance and performance testing.

(a) *Compliance dates.* (1) Hard chromium electroplating tanks. An owner or operator of an existing source shall comply with the standards within 1 year after the effective date of the standards. An owner or operator of a new source shall comply with the standards immediately upon startup.

(2) Decorative chromium electroplating tanks. An owner or operator of an existing source shall comply with the standards within 3 months after the effective date of the standards. An owner or operator of a new source shall comply with the standards immediately upon startup.

(3) Chromium anodizing tanks. An owner or operator of an existing source shall comply with the standards within 3 months after the effective date of the standards. An owner or operator of a new source shall comply with the standards immediately upon startup.

(b) The following procedures shall be used to determine compliance with the emission limits under § 63.342 (a), (b)(1), (c)(1), and (d)(1):

(1) The owner or operator shall conduct an initial performance test as required under § 63.7 using the procedures and test methods listed in §§ 63.7 and 63.344. During this performance test, the owner or operator shall determine the outlet chromium concentration as well as the following:

(i) For sources complying with § 63.342(a) through the use of a composite mesh-pad system or a packed-bed scrubber system, the owner or operator shall establish as a site-specific operating parameter the acceptable gas velocity value or range of gas velocity values using the procedures in § 63.344.

(ii) For sources complying with § 63.342(a) through the use of a packed-bed scrubber system, the owner or operator shall establish as a site-specific operating parameter the concentration of chromium in the scrubber water using a hydrometer and following manufacturer's instructions.

(iii) As an alternative to the requirement in paragraph (b)(1)(ii) of this section, the owner or operator may accept 45 grams per liter (g/L) (6 ounces per gallon (oz/gal)) as the value of the site-specific operating parameter for the concentration of chromium in the scrubber water.

(2) On and after the date on which the initial performance test is completed or is required to be completed under § 63.7, the owner or operator of an affected source shall:

(i) For sources complying with § 63.342 (a), (b)(1), (c)(1), or (d)(1) through the use of a composite mesh-pad or packed-bed scrubber system, monitor the gas velocity in accordance with the requirements in § 63.345. Operation of the affected source at a gas velocity outside of the range of gas velocity established during the initial performance test shall constitute noncompliance with the standards.

(ii) For sources complying with § 63.342 (a), (b)(1), (c)(1), or (d)(1) through the use of a packed-bed scrubber system, monitor the chromium concentration in the scrubber water in accordance with the requirements in § 63.345. Operation of the affected source at a scrubber water chromium concentration in excess of either 45 g/L (6 oz./gal) or the value established during the initial performance test shall constitute noncompliance with the standards.

(c) The following procedures shall be used to determine compliance with the surface tension limits under § 63.342 (b)(2), (c)(2), and (d)(2):

(1) The owner or operator shall measure the surface tension of the electroplating or anodizing bath using the test methods identified in § 63.344.

(2) On and after the compliance date identified in § 63.343(a), the owner or operator of an affected source shall monitor the surface tension in accordance with the requirements in Method 306B in appendix A to this part. Operation of the affected source at a surface tension in excess of those required by § 63.342 (b)(2), (c)(2), and (d)(2) shall constitute noncompliance with the standards.

(3) As an alternative to meeting the surface tension limits identified in

§ 63.342 (b)(2), (c)(2), and (d)(2), the owner or operator of an affected source may:

(i) Conduct a performance test using the procedures and test methods listed in § 63.7 and § 63.344. During this performance test, the owner or operator shall determine the outlet chromium concentration and shall establish as a site-specific operating parameter the surface tension of the electroplating or anodizing bath that corresponds to compliance with the emission limits under § 63.342 (b)(1), (c)(1), or (d)(1); and

(ii) On and after the date on which the initial performance test is completed or is required to be completed under § 63.7, the owner or operator of an affected source shall monitor the surface tension in accordance with the requirements in Method 306B in appendix A of this part. Operation of the affected source at a surface tension in excess of the value established during the initial performance test shall constitute noncompliance with the standards.

(d) An owner or operator who uses an air pollution control device not listed in § 63.343 shall submit a description of the device, test data verifying the performance of the device for reducing chromium emissions to the atmosphere, a copy of the operation and maintenance plan referenced in § 63.342(e), and appropriate operating parameters that will be monitored to establish compliance with the standards, subject to the Administrator's approval.

§ 63.344 Test methods and procedures.

(a) Each owner or operator subject to the provisions of this subpart concerning the use of air pollution control devices to control chromium emissions shall use the test methods identified in this section to demonstrate compliance with the standards in § 63.342.

(b) Method 306 or Method 306A, "Determination of Chromium Emissions from Decorative and Hard Chromium Electroplating and Anodizing Operations" shall be used to determine the concentration of total chromium in emissions from hard or decorative chromium electroplating tanks or chromium anodizing tanks. The sampling time and sample volume for each run of Method 306 shall be at least 60 minutes and 0.85 dscm (30 dscf), respectively. The sampling time and sample volume for each run of Method 306A shall be 120 minutes and 1.70 dscm (60 dscf), respectively.

(c) Method 306B, "Surface Tension Measurement and Recordkeeping for Tanks used at Decorative Chromium Electroplating and Anodizing Facilities," shall be used to measure the surface tension of electroplating and anodizing baths.

§ 63.345 Monitoring requirements.

(a) During the initial performance test required by § 63.7 and § 63.343, the owner or operator of a tank that uses an air pollution control device shall establish the range of the pressure drop across the air pollution control device as a site-specific operating parameter according to the procedures in paragraphs (a)(1) through (a)(3) of this section.

(1) Locate a velocity traverse port in a section of straight duct that connects the hooding on the plating tank with the control device. The port shall be located as close to the plating tank as possible, and shall be placed a minimum of 2 duct diameters downstream and 0.5 diameter upstream of any flow disturbance such as a bend, expansion, or contraction (see Method 1, 40 CFR part 60, appendix A). If 2.5 diameters of straight duct work does not exist, locate the port 0.8 of the duct diameter downstream and 0.2 of the duct diameter upstream from any flow disturbance. If the control device serves multiple tanks, locate a port on the straight duct work of each tank.

(2) A 12-point velocity traverse of the duct leading from each tank shall be conducted along a single axis according to Method 2 (40 CFR part 60, appendix A) using an S-type pitot tube; measurement of the barometric pressure and duct temperature at each traverse point is not required, but is suggested. Mark the S-type pitot tube as specified in Method 1 (40 CFR part 60, appendix A) with 12 points. Measure the Δp values for the velocity points and record. Stack temperature should be 70° F plus or minus 5° F at the time that the measurements are made. Determine the square root values of the individual velocity points and average. The point with the square root value that comes closest to the average square root value is the point of average velocity. The range of Δp values measured for this point during the performance test will be used as the reference for future monitoring.

(3) If one control device serves several plating tanks, a reference range for the Δp must be established during the performance test for the duct work from each tank. If flow through the ducts of one or more tanks is shut off during certain process operations, a separate reference range for the Δp must be established for those ducts that are left operating. Reference Δp values must be established during the performance test for all combinations of tank operation and duct flows that can occur.

(b) The owner or operator of a tank with a conventional packed-bed scrubber shall adhere to, at a minimum, the following maintenance practices in accordance with the operation and maintenance plan required by § 63.342(e):

(1) At least once each month, visually inspect the device to ensure there is proper drainage, no chromic acid buildup on the packed bed, and no evidence of chemical attack on the structural integrity of the device;

(2) At least once each day, visually inspect the back portion of the chevron-blade mist eliminator to ensure it is dry and there is no breakthrough of chromic acid mist;

(3) When makeup additions occur, ensure that all makeup water is fresh and supplied to the unit at the top of the packed bed;

(4) At least once each day, determine the gas velocity prior to the control device. The gas velocity shall be determined at the point of average velocity identified during the performance test in accordance with paragraph (a) of this section. Periodically determine that both openings of the pitot tube are clear; clean chromic acid residue from the pitot, when necessary.

(5) At least once each day, determine the concentration of chromic acid in the scrubber water by using a hydrometer; and

(6) At least once each day, determine the pressure drop across the packed bed(s). If the pressure drop exceeds the value established in accordance with paragraph (a) of this section, this is to be documented and operation and maintenance procedures are to be reviewed. Any corrective action that is taken must also be documented.

(c) The owner or operator of a tank with a composite mesh-pad system shall adhere to, at a minimum, the following maintenance practices in accordance with the operation and maintenance plan required by § 63.342(d):

(1) At least once each month, visually inspect the device to ensure there is proper drainage, no chromic acid buildup on the packed bed, and no evidence of chemical attack on the structural integrity of the device;

(2) At least once each day, visually inspect the back portion of the mesh pad closest to the fan to ensure there is no breakthrough of chromic acid mist;

(3) When makeup additions occur, ensure that all makeup water is fresh and supplied to the unit at the top of the packed bed;

(4) At least once each day, shut the fan and the plating tank off and wash down the composite mesh pads for at least 10 minutes;

(5) At least once each day, determine the gas velocity prior to the control devices in accordance with the requirements of paragraph (b)(4) of this section.

(6) If a packed-bed scrubber is used in conjunction with the composite mesh-pad system, at least once each day, determine the concentration of chromic acid in the scrubber water by using a hydrometer; and

(7) At least once each day, determine the pressure drop across the device. If the pressure drop exceeds the value established in accordance with paragraph (a) of this section, the exceedance shall be documented and the operation and maintenance procedures shall be reviewed. Any corrective action that is taken must also be documented.

(d) Each owner or operator of a tank that uses a wetting agent or a combination wetting agent and foam blanket shall monitor the bath to maintain the surface tension values established in § 63.342(b)(2), (c), and (d)(2). The surface tension shall be measured every 4 hours during operation of the tank with a stalagmometer or a tensiometer as specified in Method 306B, appendix A of this part.

(e) Each owner or operator of a tank that uses a foam blanket to comply with the requirements of § 63.342(a), (b)(1), or (d)(1) shall maintain a foam thickness greater than or equal to the level established during the performance test or 2.54 cm (1 inch) (whichever is greater) at all times. The foam thickness shall be measured once each hour.

§ 63.346 Recordkeeping requirements.

(a) The owner or operator of each electroplating tank that uses an add-on air pollution control device to meet the emission limit shall maintain records of daily and monthly inspections, daily gas velocity readings, daily scrubber water chromium concentrations (if applicable), daily washdowns, daily pressure drop readings, and any emission tests at the facility for a minimum of 5 years.

(1) Each inspection record shall identify the device inspected and include the following: The date and approximate time of inspection, a brief description of the working condition of the device during the inspection, the gas velocity, the scrubber water chromium concentration (if applicable), the pressure drop, and any actions taken to correct deficiencies found during the inspection.

(2) Each record of washdown shall identify the device and include the date, approximate time, and duration of the washdown.

(b) The owner or operator of each electroplating tank that uses a chromic acid solution and that uses a fume suppressant to comply with the standard shall maintain the following records at the facility for at least 5 years:

(1) The amount of fume suppressants purchased (invoices).

(2) Measurements of the surface tension of the bath.

(3) The frequency of maintenance additions.

(4) The amount of material added during each maintenance addition.

(5) If foam blankets are used, measurements of foam blanket thickness.

(6) Any emission tests to assure compliance with the standard.

(c) Each record of a foam blanket thickness measurement shall identify the electroplating tank and include the date, approximate time, measured thickness, and whether any additions were made to the bath. If an addition was made, the amount of material added would also be recorded.

(d) Each record of a surface tension measurement shall identify the electroplating tank and include the date, approximate time, measured surface tension, and whether any additions were made to the bath.

(e) The owner or operator of each electroplating tank that uses a trivalent chromium solution shall maintain the following records at the facility for at least 5 years:

(1) Measurements of the surface tension of the bath;

(2) The amount of bath additive containing wetting agents purchased (invoices); and

(3) Any emission tests to assure compliance with the standard.

(f) The owner or operator of each electroplating tank that uses a chromic acid solution and that operates an air pollution control device is not required to maintain the records required by paragraph (a) of this section if the owner or operator is complying with § 63.342(b)(2), (c)(2), or (d)(2). If the owner or operator is complying with § 63.342(b)(2), (c)(2), or (d)(2), the recordkeeping requirements of paragraphs (b), (c), and (d) of this section apply.

§ 63.347 Reporting requirements.

(a) The owner or operator of each affected source subject to these standards shall fulfill all reporting requirements outlined in the General Provisions to 40 CFR part 63, subpart A, §§ 63.7 through 63.10. These reports shall be made to the Administrator or delegated State authority.

(b) The owner or operator of each existing hard chromium electroplating tank shall include the maximum cumulative potential rectifier capacity of the facility in which the tank is located in the initial notification report required by § 63.9(h).

(c) The owner or operator of each affected source subject to these standards shall include the monitored operating parameter value reading required by § 63.343 in the quarterly excess emissions and continuous monitoring system performance report and summary report required by § 63.10(e). In the case of exceedances, the report must also contain a description and timing of the steps taken to address the cause of the exceedance.

3. By adding methods 306, 306A, and 306B in numerical order to read as follows.

Appendix A to Part 63—Test Methods

* * * * *

Method 306—Determination of Chromium Emissions From Decorative and Hard Chromium Electroplating and Anodizing Operations

1. Applicability and Principle

1.1 Applicability. This method applies to the determination of chromium (Cr) in emissions from decorative and hard chrome electroplating facilities and anodizing operations.

1.2 Principle. Emissions are collected from the source by using a Method 5 sampling train (40 CFR part 60, Appendix A), with the filter omitted and a glass nozzle and probe liner. The chromium emissions are collected in an alkaline solution: 0.1 N sodium hydroxide (NaOH) or 0.1 N sodium bicarbonate ($NaHCO_3$). The collected samples remain in the alkaline solution until analysis. The chromium sample is analyzed using inductively coupled plasma emission spectrometry (ICP) at 267.72 nm. Alternatively, if improved detection limits are required, a portion of the alkaline impinger solution is digested with nitric acid and analyzed by graphite furnace atomic absorption spectroscopy (GFAAS) at 357.9 nm.

2. Range, Sensitivity, Precision, and Interferences

2.1 Range. A linear response curve for ICP can be obtained in the range 10 μg Cr/liter to at least 500 μg Cr/liter. A linear response curve for GFAAS can be obtained in the range 5 μg Cr/liter to 150 μg Cr/liter. The upper limit of both techniques can be extended by appropriate dilution.

2.2 Sensitivity. Minimum detection limits of 7 μg Cr/liter for ICP and 1 μg Cr/liter for GFAAS have been observed.

2.3 Precision. To be determined.

2.4 GFAAS Interferences. Low concentrations of calcium and/or phosphate may cause interferences; at concentrations above 200 µg/L, calcium's effect is constant and eliminates the effect of phosphate. Calcium nitrate is therefore added to ensure a known constant effect. Other matrix modifiers recommended by the instrument manufacturer may also be suitable. Nitrogen should not be used as the purge gas due to cyanide band interference. Background correction may be required because of possible significant levels of nonspecific absorption and scattering at the 357.9 nm analytical wavelength. Zeeman or Smith-Hieftje background correction is recommended to correct for interferences due to high levels of dissolved solids in the alkaline impinger solutions.

2.5 ICP Interferences.

2.5.1 Spectral Interferences. Spectral interferences are caused by: (1) Overlap of a spectral line from another element; (2) unresolved overlap of molecular band spectra; (3) background contribution from continuous or recombination phenomena; and (4) stray light from the line emission of high-concentration elements. Spectral overlap may be compensated for by computer correcting the raw data after monitoring and measuring the interfering element. At the 267.72 nm Cr analytical wavelength, iron, manganese and uranium are potential interfering elements. Background and stray light interferences can usually be compensated for by a background correction adjacent to the analytical line. Unresolved overlap requires the selection of an alternative chromium wavelength. Consult the instrument manufacturer's operation manual for interference correction procedures.

2.5.2 Physical Interferences. High levels of dissolved solids in the samples may cause significant inaccuracies due to salt buildup at the nebulizer and torch tips. This problem can be controlled by diluting the sample or providing for extended rinse times between sample analyses. Standards are prepared in the same matrix as the samples (i.e., 0.1 N NaOH).

2.5.3 Chemical Interferences. These include molecular compound formation, ionization effects and solute vaporization effects, and are usually not significant in ICP, especially if the standards and samples are matrix matched.

3. Apparatus

3.1 Sampling Train. Same as Method 5, Section 2.1, but omit filter, and use quartz or glass for probe and liner in place of stainless steel. Use 0.1 N NaOH or 0.1 N $NaHCO_3$ in the impingers in place of water.

3.2 Sample Recovery. Same as Method 5, Section 2.2, but use 0.1 N NaOH or 0.1 N $NaHCO_3$ in place of acetone. Rinse probe nozzle, probe liner, impingers and connecting glassware into a single sample container.

3.3 Analysis. For analysis, the following equipment is needed.

3.3.1 General.

3.3.1.1 Phillips Beakers.

3.3.1.2 Hot Plate.

3.3.1.3 Volumetric Flasks. Class A 100 ml and other appropriate volumes.

3.3.1.4 Assorted Pipettes.

3.3.2 Analysis by GFAAS.

3.3.2.1 Chromium Hollow Cathode Lamp or Electrodeless Discharge Lamp.

3.3.2.2 Graphite Furnace Atomic Absorption Spectrophotometer.

3.3.3 Analysis by ICP.

3.3.3.1 ICP Spectrometer. Computer-controlled emission spectrometer with background correction and radio frequency generator.

3.3.3.2 Argon Gas Supply. Welding grade or better.

4. Reagents

Unless otherwise indicated, all reagents shall conform to the specifications established by the Committee on Analytical Reagents of the American Chemical Society (ACS reagent grade). Where such specifications are not available, use the best available grade.

4.1 Sampling.

4.1.1 Water. Deionized, distilled, that conforms to ASTM Type II water for analysis.

4.1.2 Sodium Hydroxide (NaOH) Absorbing Reagent, 0.1 N or Sodium Bicarbonate ($NaHCO_3$) Absorbing Reagent, 0.1 N. Dissolve 4.0 gm of sodium hydroxide in 1 L of water, or dissolve 8.5 gm of sodium bicarbonate in 1 L of water.

4.2 Sample Recovery.

4.2.1 0.1 N NaOH or 0.1 N $NaHCO_3$. See Section 4.1.2. Use the same reagent for recovery that was used in the impingers.

4.3 Sample Preparation and Analysis.

4.3.1 Concentrated Nitric Acid (HNO_3). Trace metals or better grade HNO_3 must be used for reagent preparation; ACS reagent grade HNO_3 is acceptable for cleaning glassware.

4.3.2 Matrix Modifier. See instrument manufacturer's manual for suggested matrix modifier.

4.3.3 Total Chromium Standard Stock Solution (1000 mg/L). Procure a certified aqueous standard or dissolve 2.829 g of potassium dichromate ($K_2Cr_2O_7$) in water and dilute to 1 L.

4.3.4 Total Chromium Standards for GFAAS. Chromium solutions for GFAAS calibration shall be prepared to contain 1.0% (v/v) HNO_3. The zero standard shall be 1.0% (v/v) HNO_3.

4.3.5 Calibration Standards. Prepare by diluting the chromium stock solution (6.2.5) in 0.1 N NaOH at the following suggested levels: 2 ml of the stock solution in 1000 ml, 250 ml, and 50 ml to provide 2, 8 and 40 µg Cr^{+6}/ml, respectively.

4.3.6 Calcium Nitrate $Ca(NO_3)_2$ Solution (10 µg Ca/ml). Prepare the solution by weighing 36 mg of $Ca(NO_3)_2$ into a 1-liter volumetric flask. Dilute with water to 1 liter.

5. Procedure

5.1 Sampling. Same as Method 5, Section 4.1, except omit the filter and filter holder from the sampling train. Use glass nozzle and probe liner. Clean all glassware in hot soapy water designed for laboratory cleaning of glassware. Follow the cleaning with a deionized water rinse. Place 100 ml of 0.1 N NaOH or 0.1 $NaHCO_3$ in each of the first two impingers.

5.2 Sample Recovery. Follow the basic procedures of Method 5, Section 4.2, with the exceptions noted below; a filter is not recovered from this train.

5.2.1 Container No. 1. Measure the volume of the liquid in the first, second, and third impingers and quantitatively transfer into a labelled sample container. Use 200 ml of 0.1 N NaOH or 0.1 N $NaHCO_3$ to rinse the nozzle, probe liner, three impingers, and connecting glassware; add this wash to the same container.

5.2.2 Container No. 2 (Reagent Blank). Place 400 ml of 0.1 N NaOH or 0.1 N $NaHCO_3$ in a labeled sample container.

5.2.3 Sample Preservation. Refrigerate samples upon receipt. (Containers Nos. 1 and 2).

5.3 Sample Preparation and Analysis. For GFAAS measurement, an acid digestion of the alkaline impinger solution is required. Two types of blanks are required for the analysis. The calibration blank is used in establishing the analytical curve, and the reagent blank is used to correct for possible contamination resulting from the sample processing. The 0.1 N NaOH solution or the 0.1 N $NaHCO_3$ from 4.1.2 is used as the calibration blank. The reagent blank must contain all the reagents and be in the same volume as used in the processing of the samples. The reagent blank must be carried through the complete procedure and contain the same acid concentration in the final solution as the sample solutions analyzed.

5.3.1 Acid Digestion for GFAAS. In a beaker, add 10 ml of concentrated nitric acid to the sample aliquot of 300 ml taken for analysis. Cover the beaker with a watch glass. Place the beaker on a hot plate and reflux the sample down to near dryness. Add another 5 ml of concentrated HNO_3 to complete the digestion. Carefully reflux the sample volume down to near dryness. Wash down the beaker walls and watch glass with distilled water. Adjust the final volume to 50 ml or a predetermined volume based on the expected Cr concentration. The final concentration of HNO_3 in the solution should be 1% (v/v). Transfer the digested sample to a 50 ml volumetric flask. Add 0.5 ml of concentrated HNO_3, 1 ml of the 10 µg/ml of $Ca(NO_3)_2$. Dilute to 50 ml with water.

5.3.2 Sample Analysis by GFAAS. The 357.9-nm wavelength line shall be used. Follow the manufacturer's operating instructions for all other spectrophotometer parameters.

5.3.2.1 Furnace parameters suggested by the manufacturer should be employed as guidelines. Since temperature-sensing mechanisms and temperature controllers can vary between instruments and/or with time, the validity of the furnace parameters must be periodically confirmed by systematically altering the furnace parameters while analyzing a standard. In this manner, losses of analyte due to higher-than-necessary temperature settings or losses in sensitivity due to less than optimum settings can be minimized. Similar verification of furnace parameters may be required for complex sample matrices.

5.3.2.2 Inject a measured aliquot of digested sample into the furnace and atomize. If the concentration found exceeds

the calibration range, the sample should be diluted with the same acid matrix and reanalyzed. Consult the operator's manual for suggested injection volumes. The use of multiple injections can improve accuracy and help detect furnace pipetting errors.

5.3.2.3 Subtract a sample blank reading from a sample reading to obtain a net reading. (Note that the sample blank is the "reagent blank.") Employ a minimum of one matrix-matched sample blank per sample batch to determine if contamination or any memory effects are occurring.

5.3.2.4 Calculate the chromium concentrations (1) by the method of standard additions (see operator's manual) or (2) from the calibration curve, or (3) directly from the instrument's concentration readout. All dilution or concentration factors must be taken into account.

5.3.2.5 Dilute samples with reagent blank solution if they are more concentrated than the highest standard. Note that the equation in section 8.1 contains a dilution factor to account for any dilution.

5.3.3 Sample Analysis by ICP. The ICP measurement is performed directly on the alkaline impinger reagent; acid digestion is not necessary provided the samples and standards are matrix matched. However, ICP may only be used when the solution analyzed has a Cr concentration greater than 50 µg/l (0.05 µg/ml).

5.3.3.1 Set up the instrument with proper operating parameters including wavelength, background correction settings (if necessary), interfering element correction settings (if necessary). The instrument must be allowed to become thermally stable before beginning performance of measurements (usually requiring at least 30 min of operation prior to calibration). During this warmup period, the optical calibration and torch position optimization may be performed (consult the operator's manual).

5.3.3.2 Before beginning the sample run, analyze the highest calibration standard as if it were a sample. Concentration values obtained should not deviate from the actual values by more than 5% (or the established control limits, whichever is lower). If they do, follow the recommendations of the instrument manufacturer to correct for this condition.

5.3.3.3 Flush the system with the calibration blank solution for at least 1 min before the analysis of each sample. Analyze the calibration standard blank after each 10 samples. Use the average intensity of multiple exposures for both standardization and sample analysis to reduce random error.

5.3.3.4 Dilute and reanalyze samples that are more concentrated than the linear calibration limit or use an alternate, less sensitive Cr wavelength for which quality control data are already established.

5.3.3.5 If dilutions were performed, the appropriate factors must be applied to sample values. All results should be reported in µg/ml with up to three significant figures.

6. Calibration

6.1 Sampling Train Calibration. Perform all of the calibrations described in Method 5, Section 5.

6.2 GFAAS Calibration. Either: (1) Run a series of chromium standards and a calibration blank and construct a calibration curve by plotting the concentrations of the standards against the absorbencies; or (2) using the method of standard additions, plot added concentration versus absorbance. For instruments that read directly in concentration, set the curve corrector to read out the proper concentration, if applicable. This is customarily performed automatically with most instrument computer based data systems. Calibration standards for total chromium should start with 1% v/v HNO_3 with no chromium for the zero standard and appropriate increases in total chromium concentration in other calibration standards. Prepare at least three (3) standards (not including the zero). The standards should be diluted with 0.1 N NaOH and carried through the sample preparation procedure to ensure that matrix matching is accomplished and to avoid the need for the method of standard additions. Calibration standards should be prepared fresh daily.

6.3 ICP Calibration. Calibrate the instrument according to the instrument manufacturer's recommended procedures, using a calibration blank and three (3) standards for the initial calibration. Be sure that samples and standard calibration matrices are matrix matched. Flush the system with the calibration blank between each standard. (Use the average intensity of multiple exposures for both standardization and sample analysis to reduce random error.)

7. Quality Control

7.1.1 GFAAS Quality Control. Run a check standard after approximately every 10 sample injections. These standards are run, in part, to monitor the life and performance of the graphite tube. Lack of reproducibility or a significant change in the signal for the check standard indicates that the graphite tube should be replaced.

7.1.2 Duplicate Samples. Run one duplicate sample for every 20 samples, (or one per source test, whichever is more frequent) providing there is enough sample for duplicate analysis. Duplicate samples are brought through the whole sample preparation separately.

7.1.3 Matrix Spiking. Spiked samples shall be prepared and analyzed daily to ensure that correct procedures are being followed and that all equipment is operating properly. Spiked sample recovery analyses should indicate a recovery for the Cr spike of between 75 and 125%. Spikes are added prior to any sample preparation. Cr levels in the spiked sample should provide final solution concentrations that fall within the linear portion of the calibration curve.

7.1.4 Method of Standard Additions. Whenever sample matrix problems are suspected and standard/sample matrix matching is not possible or whenever a new sample matrix is being analyzed, the method of standard additions shall be used for the analysis of all extracts. Method 12 specifies a performance test to determine if the method of standard additions is necessary.

7.1.5 Quality Control Check Sample. The concentration of all calibration standards should be verified against a quality control check sample obtained from an outside source. This is done by analyzing the check sample immediately following calibration. The result should be within 10% of the expected value before sample analysis begins.

7.2 ICP Quality Control.

7.2.1 Interference Check. Prepare an interference check solution to contain known concentrations of interfering elements that will provide an adequate test of the correction factors in the event of potential spectral interferences. Two potential interferences, iron and manganese, may be prepared as 1000 µg/ml and 200 µg/ml solutions, respectively. The solutions should be prepared in dilute HNO_3 (1–5%). Particular care must be taken to ensure that the solutions and/or salts used to prepare the solutions are of ICP grade purity (i.e., that no measurable Cr contamination exists in the salts/solutions). Commercially prepared interfering element check standards are available. Verify the interelement correction factors every 3 months by analyzing the interference check solution. The correction factors are calculated according to the instrument manufacturer's directions. If interelement correction factors are used properly, no false Cr should be detected.

7.2.2 Quality Control Check Sample. Prepare in the same alkaline matrix as the calibration standards; it should be at least 100 times the instrumental detection limit. This sample should be prepared from a different source/supplier (than the calibration standards) and is used to verify the accuracy of the calibration curve. Prior to sample analysis, analyze one check standard prepared from a Cr stock solution source other than that used for preparation of the calibration curve standards (see 7.2.10). The check standard concentration should be at least 100 times the minimum detection limit.

7.2.3 Laboratory Blank. Analyze a minimum of one laboratory blank per sample batch to determine if contamination or any memory effects are occurring.

7.2.4 Duplicates. Analyze one duplicate sample for every 20 samples. A duplicate sample is a sample brought through the whole sample preparation and analytical process.

8. Emission Calculations

Carry out the calculations, retaining one extra decimal figure beyond that of the acquired data. Round off figures after final calculations.

8.1 Total Cr in Sample. Calculate M, the total µg Cr in each sample, as follows:

$$M = V_{ml} \bullet C \bullet F \bullet D \qquad \text{Eq. 306–1}$$

where:

V_{ml} = Volume of impinger reagent plus rinses, ml.

C = Concentration of Cr in sample, µg Cr/ml (direct instrument readout).

F = Dilution factor.

= *Volume of aliquot after dilution (ml)*

Volume of aliquot before dilution (ml)

D = Digestion factor.

= *Volume of sample aliquot after digestion (ml)*

Volume of sample aliquot submitted to digestion (ml)

8.2 Average Dry Gas Meter Temperature and Average Orifice Pressure Drop. Same as Method 5, Section 6.2.

8.3 Dry Gas Volume, Volume of Water Vapor, Moisture Content. Same as Method 5, Sections 6.3, 6.4, and 6.5, respectively.

8.4 Cr Emission Concentration. Calculate C_s (mg/dscm), the Cr concentration in the stack gas, dry basis, corrected to standard conditions, as follows:

$$C_s = (10^{-3}\ mg/\mu g)\ [M/V_{m(std)}] \quad \text{Eq. 306-2}$$

8.5 Isokinetic Variation, Acceptable Results. Same as Method 5, Sections 6.11 and 6.12, respectively.

9. Bibliography

9.1 Test Methods for Evaluating Solid Waste. U.S. Environmental Protection Agency. SW-846, 2nd Edition. July 1982.

9.2 Cox, X.B., R.W. Linton, and F.E. Butler. Determination of Chromium Speciation in Environmental Particles—A Multitechnique Study of Ferrochrome Smelter Dust. Accepted for publication in Environmental Science and Technology.

9.3 Same as Bibliography of Method 5, Citations 2 to 5 and 7.

9.4 California Air Resources Board, "Determination of Total Chromium and Hexavalent Chromium Emissions from Stationary Sources." Method 425, September 12, 1990.

9.5 Test Methods for Evaluating Solid Waste. U. S. Environmental Protection Agency. SW-846, 3rd Edition. November 1986.

Method 306A—Determination of Chromium Emissions From Decorative and Hard Chromium Electroplating and Anodizing Operations

1. Applicability and Principle

1.1 Applicability. This method is used to determine the concentration of chromium emissions from chromium electroplating and anodizing operations that use a chromic acid bath. The method is less expensive and less complex to conduct than Method 306. Correctly applied, the precision and bias of the sample results will be comparable to those obtained with the isokinetic Method 306. This method is applicable under ambient moisture, air, and temperature conditions.

1.2 Principle. The chromium emissions are removed from the duct at a constant sampling rate determined by a critical orifice and collected in a probe and impingers. The sampling time at the sampling traverse points is varied according to the stack gas velocity to obtain a proportional sample. The concentration is determined by the same analytical procedures used in Method 306: inductively-coupled plasma emission spectrometry (ICP) or graphite furnace atomic absorption spectrometry (GFAAS).

2. Range, Sensitivity, Precision, and Interferences

Same as Method 306, Section 2.

3. Apparatus

Note: Mention of trade names or specific products does not constitute endorsement by the Environmental Protection Agency.

3.1 Sampling Train. A schematic of the sampling train is shown in Figure 306A-1. The components of the train are available commercially, but some fabrication and assembly are required. If Method 306 equipment is available, the sampling train may be assembled as specified in Method 306 and the sampling rate of the meter box set at the delta $H_@$ specified for the calibrated orifice; this train is then operated as specified in this method.

3.1.1 Probe Nozzle/Tubing and Sheath. Use approximately ¼ in. inner diameter (ID) glass or rigid plastic tubing about 8 inches long with a short 90 degree bend at one end to form the nozzle. Grind a slight taper on the nozzle end before making the bend. Attach the nozzle to flexible tubing of sufficient length to collect a sample from the stack. Use a straight piece of larger diameter rigid tubing (such as metal conduit or plastic water pipe) to form a sheath that begins about 1 in. from the 90° bend on the nozzle and encases the flexible tubing.

3.1.2 S-Type Pitot. Same as Method 2, Section 3.

3.1.3 Sample Line. Use thick wall flexible plastic tubing (polyethylene, polypropylene, polyvinylchloride) about ¼ in. to ⅜ in. ID to connect the train components. A combination of rigid plastic tubing and thin wall flexible tubing may be used as long as neither tubing collapses when leak-checking the train. Metal tubing cannot be used.

BILLING CODE 6560-50-P

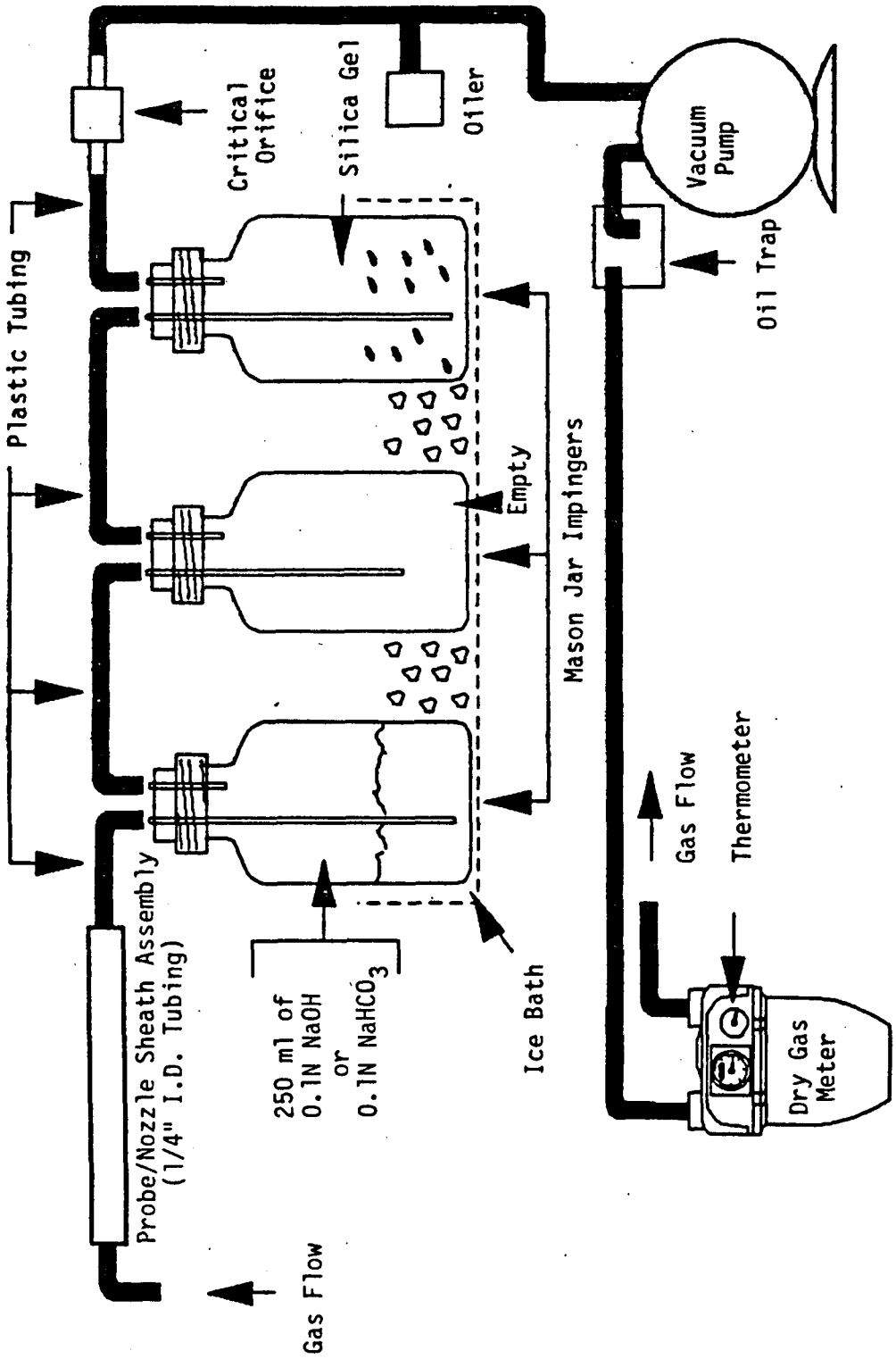

Figure 306-A1 sampling train schematic

BILLING CODE 6560-50-C

3.1.4 Impingers. One quart capacity "Mason" glass canning jars with vacuum seal lids are used. Three impingers are required: the first is for collecting reagent, the second is empty and used to collect any reagent carried over from the first impinger, and the third contains the drying agent. Install leak-tight inlet and outlet tubes for assembly with train. The tubes may be made of approximately ¼ in. ID glass or rigid plastic tubing. For the inlet tube of the first impinger, heat the glass or plastic tubing and draw until the tubing separates. Cut the tip off until the tip orifice is 3/32 in. in diameter. When fabricating the first impinger, place the tip orifice 3/16 in. above the bottom of the jar when assembled. For the second impinger, the inlet tube need not be drawn and sized, but the tip should be approximately 2 in. above the bottom of the jar. The inlet tube of the third impinger should extend to about ½ in. above the bottom of the jar. Locate the outlet tube end of all impingers about ½ inch beneath the bottom of the lid.

3.1.5 Manometer. It is inclined, to read water column to 1/100 in. for the first inch and 1/10 inch thereafter. Range 0–6 in.

3.1.6 Critical Orifice. The critical orifice is a small restriction in the sample line that is located upstream of the vacuum pump and sets the sample rate at about 0.75 cubic foot per minute. An orifice meter can be made of ⅛ in. brass tubing approximately 1 in. long sealed inside larger diameter, approximately ⅜ in., brass tubing to serve as a critical orifice giving a constant sample flow. Materials other than brass can be used to construct the critical orifice as long as the flow through the sampling train is approximately 0.75 cubic foot per minute.

3.1.7 Connecting Hardware. Standard pipe and fittings, ¼ in. or ⅛ in., are used to install vacuum pump and dry gas meter in train.

3.1.8 Pump Oiler. A glass oil reservoir with a wick mounted at pump inlet lubricates pump vanes.

3.1.9 Vacuum Pump. "Gast" sliding vane mechanical pump with fiber vanes suitable to deliver a minimum of 26 in. Hg vacuum and 2.0 cfm are used.

3.1.10 Oil Trap. Empty glass oil reservoir without wick is mounted at pump outlet to prevent oil from reaching the dry gas meter.

3.1.11 Dry Gas Meter. Residential 175 cubic feet per hour (CFH) capacity dry gas meter with thermometer installed monitors meter temperature.

3.2 Sample Recovery.

3.2.1 Wash Bottles. These are glass or inert plastic, 500 or 1000 ml, with spray tube.

3.2.3 Sample Containers. The first mason jar impinger of the sampling train serves as the sample container. A new lid and plastic wrap are substituted for the impinger inlet/outlet assembly.

3.3 Analysis. Same as Method 306, Section 3.3.

4. Reagents

4.1 Sampling. Same as Section 4.1, Method 306.

4.2 Sample Recovery. Same as Section 4.2, Method 306.

5. Procedure

5.1 Sampling.

5.1.1. Pretest Preparation.

5.1.1.1 Port Location. Locate ports as specified in Section 2 of Method 1. Use a total of 24 sampling points for round ducts and 24 or 25 points for rectangular ducts. Mark the pitot and sampling probe with thin strips of tape to permit velocity and sample traversing. For ducts less than 12 inches in diameter, use a total of 16 points.

5.1.1.2 Velocity Traverse. Perform a velocity traverse before obtaining samples. Figure 306A–2 may be used to record velocity traverse data. If testing occurs over several days, perform the traverse at the beginning of each day. At the end of the test effort each day, perform a final traverse. Perform traverses as specified in Section 3 of Method 2, but record the Δp (velocity head) values only. Check the stack temperature before and after recording the Δp values and use the average of the two temperatures for the stack temperature. Enter the Δp values for each point. Check for cyclonic flow during the first traverse to verify that it does not exist; if cyclonic flow does exist, make sure that the absolute average angle of misalignment does not exceed 20 degrees. If the average angle of misalignment exceeds 20 degrees at an outlet location, install straightening vanes to eliminate the cyclonic flow. If it is necessary to test an inlet location where cyclonic flow exists, it may not be possible to install straightening vanes. In this case, a variation of the alignment method must be used. This must be approved by the Administrator.

BILLING CODE 6560–50–P

PLANT _____
DATE _____ TIME _____
LOCATION _____
OPERATOR(S) _____

SCHEMATIC OF POINTS

CIRCLE ONE:

BEFORE RUN 1 BEFORE RUN 2 BEFORE RUN 3 AFTER RUN 3

Traverse Point Number	Cyclonic Flow Angle (Degrees)	Δp	$\sqrt{\Delta p}$	$\frac{\sqrt{\Delta p}}{\text{AVE}}$ x 5 min AVE Numerical Minutes	Decimal Part of Minute x 60 = Seconds	Whole Minutes + Seconds = Sample Time
	AVERAGE		AVE			

Figure 306A-2. Velocity Traverse and Point Sample Time Calculation Sheet

BILLING CODE 6560-50-C

5.1.1.3 Point Sampling Times. Since the sampling rate of the train is held constant by the critical orifice, it is necessary to calculate specific sampling times for each point in order to obtain a proportional sample. If all sampling can be completed in a single day, it is necessary to calculate the point sampling times only once. If sampling occurs over several days, calculate the point sample times for each day using velocity traverse data obtained earlier in the day. Determine the average of the Δp values obtained during the velocity traverse (Figure 306A–2). Calculate the sampling times for each point using Equation 306A–1. Convert the decimal parts of minutes to seconds. If the stack diameter is less than 12 inches, use 7.5 minutes in place of 5 minutes in the equation and 16 sampling points.

$$\text{Minutes at point} = \sqrt{\frac{\text{Point } \Delta p}{\text{Average } \Delta p}} \times 5 \text{ minutes} \qquad \text{Eq. 306A-1}$$

Where:

n=Total sampling points.

5.1.1.4 Preparation of Sampling Train. Assemble the sampling train as shown in Figure 306A–1. Secure the nozzle-liner assembly to the sheath to prevent slipping when sampling. Before charging, rinse the first mason jar impinger with either 0.1N sodium hydroxide or 0.1N sodium bicarbonate; discard the solution. Put 250 ml of 0.1 N sodium hydroxide or 0.1N sodium bicarbonate sampling solution into the first mason jar. Similarly, rinse the second mason jar impinger and leave empty. Put silica gel into the third mason jar impinger until the impinger is half full. Place the impingers into an ice bath and check to ensure that the lids are tight.

5.1.1.5 Train Leak Check Procedure. Wait until the ice has cooled the impingers before sampling. Next, seal the nozzle with a finger covered by a piece of clear plastic wrap and turn on the pump. Observe any leak rate on the dry gas meter. The leak rate should not exceed 0.02 cfm.

5.1.2 Sampling Train Operation.

5.1.2.1 Record all pertinent process and sampling data on the data sheet (see Figure 306A–3). Ensure that the process operation is suitable for sample collection.

5.1.2.2 Place the probe/nozzle into the duct at the first sampling point and turn on the pump. A minimum vacuum of 15 in. Hg or 0.47 atmosphere between the critical orifice and pump is required to maintain critical flow. Sample for the time interval previously determined for that point. Move to the second point and sample for the time interval determined for that point; sample all points on the traverse in this manner. Keep ice around the impingers during the run. Complete the traverse and turn off the pump. Move to the next sampling port and repeat. Record the final dry gas meter reading.

BILLING CODE 6560–50–P

Plant _____ Date _____ Run Number _____
Sampling Site _____ Operator _____
Total Micrograms catch(mCr) _____ Stack radius(r) _____
Avg dry gas meter temp F(Tm) _____ Avg delta p(p avg) _____
Meter correction factor(Ym) _____ Stack temp F(Ts) _____
Meter volume - actual cu ft(Vm) _____ Leak rate before run _____
Barometric pressure in. Hg(Pbar) _____ Leak rate after run _____
Start clock time _____ Stop meter volume _____
Stop clock time _____ Start meter volume _____

REMARKS: _____

POINT NO.	SAMPLE (MIN/SEC)	GAS METER TEMP (F)	POINT NO.	SAMPLE (MIN/SEC)	GAS METER TEMP (F)

$$Cs = \frac{m\ Cr\ (Tm+460)}{499.8\,(Ym)\,(Vm)\,(Pbar)}$$

$$Kg/Hr = (Cs)\,0.0001597\,r^2 \sqrt{\frac{p\ avg\ (Ts+460)}{Pbar\,(2873)}}$$

Mg/Cubic Meter(Cs) _____ (Optional)Kg/Hr _____

Figure 306A-3. Chromium Constant Sampling Rate Field Data

BILLING CODE 6560-50-C

5.1.2.3 Post Test Leak Check. Remove the probe assembly and flexible tubing from the first impinger. Do not cover the nozzle. Seal the inlet tube of the first impinger with a finger covered by clear plastic wrap and turn on the pump. Observe any leak rate on the dry gas meter. If the leak rate exceeds 0.02 cfm, reject the run. If the leak rate is acceptable, take the probe assembly and impinger assembly to the sample recovery area.

5.2 Sample Recovery.

5.2.1 After the train has been moved to the sample recovery area, disconnect the tubing that joins the first impinger with the second.

5.2.2 The first impinger jar is also used as the sample container jar. Unscrew the lid from the first impinger jar. Lift the inlet/outlet tube assembly almost out of the jar, and using the wash bottle, rinse the outside of the impinger tip that was immersed in the impinger jar with extra sampling reagent; rinse the inside of the tip as well.

5.2.3 Recover the second impinger by removing the lid and pouring any contents from the second impinger into the first impinger. Rinse the second impinger including the inside and outside of the impinger stem as well as any connecting plastic tubing with extra sampling reagent and place the rinse into the first impinger.

5.2.4 Hold the nozzle and connecting plastic tubing in a vertical position so that the tubing forms a "U". Using the wash bottle, partially fill the tubing with sampling reagent. (Keep a minimum of 100 ml of the sampling reagent for a blank analysis). Raise and lower the end of the plastic tubing several times to cause the reagent to contact the major portion of the internal parts of the assembly thoroughly. Do not raise the solution level too high or part of the sample will be lost. Place the nozzle end of the assembly over the mouth of the first impinger jar (sample container) and elevate the plastic tubing so that the solution flows rapidly out of the nozzle. Perform this procedure three times. Next, repeat the recovery procedure but allow the solution to flow rapidly out the open end of the plastic tubing into the first impinger jar.

5.2.5 Place a piece of clear plastic wrap over the mouth of the first impinger jar. Use a standard lid and band assembly to seal the jar. Label the jar with the sample number and mark the liquid level to gauge any losses during handling.

5.3 Analysis. Sample preparation and analysis procedures are identical to Method 306, Section 5.3.

6. Calibration

6.1 Dry Gas Meter. Calibrated by manufacturer or as specified in Method 5.

6.2 GFAA Spectrometer. Same as Method 306, Section 6.2.

6.3 ICP Spectrometer. Same as Method 306, Section 6.3.

7. Quality Control

Same as Method 306, Section 7.

8. Calculations

8.1 Pollutant Concentration. Calculate the concentration (C_s) of chromium in milligrams per dry standard cubic meter (mg/dscm) as follows:

$$C_s = \frac{M_{Cr} \times (T_m + 460)}{499.8\,(Y_m)(V_m)(P_{bar})} \quad \text{Eq. 306A-2}$$

where:

M_{Cr}=Micrograms of Cr in sample from Method 306, Eq. 306–1.

T_m=Dry gas meter temperature in °F.

Y_m=Dry gas meter correction factor.

V_m=Dry gas meter volume in ft^3.

P_{bar}=Barometric pressure in inches Hg.

8.2 Approximate Mass Emission Rate (Optional). Calculate an approximate mass emission rate for chromium in kilograms per hour using the following equation:

$$Kg/hr = 0.0001597\, r^2 \sqrt{\frac{\Delta p_{ave}\,(T_s + 460)}{P_{bar}\,(28.73)}} \times C_s \quad \text{Eq. 306A-3}$$

Where:

r=Radius of stack in inches.

Δp_{ave}=Average of Δp values.

T_s=Stack temperature in °F.

P_{bar}=Barometric pressure in inches Hg.

C_s=Concentration of hexavalent chromium in mg/dscm.

Note: The emission rate is based on an average moisture content of 2 percent.

9. Bibliography

1. F.R. Clay, Memo, Impinger Collection Efficiency—Mason Jars vs. Greenburg-Smith Impingers, Dec. 1989.

2. Robin Segall, Draft Screening Method for Emissions from Chromium Plating Operations, Entropy Environmentalists, Jan. 1988.

3. F.R. Clay, Paper, A Simplified Method for Sampling for Hexavalent Chromium, May 1990.

4. F.R. Clay, Paper, Proposed Sampling Method 306A for the Determination of Hexavalent Chromium Emissions from Electroplating and Anodizing Facilities, May 1992.

Method 306B—Surface Tension Measurement for Tanks Used at Decorative Chromium Electroplating and Anodizing Facilities

1. Applicability and Principle

1.1 Applicability. This method is applicable to all decorative chromium plating and anodizing operations where a wetting agent is used in the tank to reduce emissions from the surface of the plating solution.

1.2 Principle. During an electroplating or anodizing operation, gas bubbles generated during the process rise to the surface of the liquid and burst. Upon bursting, tiny droplets of chromic acid become entrained in ambient air. The addition of a wetting agent to the tank bath reduces the surface tension of the liquid and diminishes the formation of these droplets. This method determines the surface tension of the bath using a stalagmometer or a tensiometer to confirm that there is sufficient wetting agent present.

2. Apparatus

2.1 Stalagmometer or Tensiometer. A commercially available stalagmometer, platinum ring detachment tensiometer or equivalent surface tension measuring device is required.

3. Procedure

3.1 The surface tension of the tank bath may be measured by using a tensiometer or a stalagmometer. If a tensiometer is used, the procedures specified in ASTM Method D 1331–89, Standard Test Methods for Surface and Interfacial Tension of Solution of Surface Active Agents, shall be followed. If a stalagmometer is used, the instructions provided with the measuring device must be followed.

3.2 Measurements of the bath surface tension must be made every 4 hours of tank operation. If the surface tension of the bath exceeds 40 dynes per centimeter for three consecutive four-hour periods, the interval between measurements must be reduced in one-hour increments until two consecutive measurements indicate the surface tension to be at or below 40 dynes per centimeter. If the activity level in the plating or anodizing tank is reduced, the time interval between measurements can be increased to a maximum of four hours as long as two consecutive measurements indicate the surface tension is being maintained at or below 40 dynes per centimeter.

[FR Doc. 93–30115 Filed 12–15–93; 8:45 am]

BILLING CODE 6560–50–P

federal register

Thursday
December 16, 1993

Part III

Department of Transportation

Federal Highway Administration

Request for Public Participation in the Development of an Intelligent Vehicle-Highway Systems (IVHS) National Program Plan; Notice

DEPARTMENT OF TRANSPORTATION

Federal Highway Administration

[FHWA Docket No. 94-2]

Request for Public Participation in the Development of an Intelligent Vehicle-Highway Systems (IVHS) National Program Plan

AGENCY: Federal Highway Administration (FHWA), DOT.

ACTION: Notice; request for comments.

SUMMARY: The Department of Transportation hereby announces its interest in public participation in the development of the National Intelligent Vehicle-Highway Systems (IVHS) Program Plan (the Plan). The Plan will describe the systematic development of a set of IVHS user services, including the research, development, operational testing, and commercial product development that need to be accomplished to reach deployment of these services. Because the Plan is being developed with the user as the focus, the Department is interested in participation from a broad range of individuals and organizations including, but not limited to, public officials from State and local governments, consumer groups, vehicle manufacturers and other private sector entities, transit authorities, toll authorities, small businesses, academic institutions, associations, and individual citizens.

DATES: Comments on the October 1993 draft (described below) are due January 31, 1994. Comments received after that date will be considered to the extent possible.

ADDRESSES: Comments should be sent (preferably four copies) to: Docket Clerk, Docket No. 94-2, room 4232, United States Department of Transportation, 400 Seventh Street, SW., Washington, DC 20590. To obtain a copy of the October 1993 draft IVHS National Program Plan, please provide a self-addressed label to: Federal Highway Administration, HTV-10, 400 Seventh Street, SW., room 3400, Washington, DC 20590. When requesting a copy of the Plan, please submit a brief outline including your name, the name of your organization (if applicable), a statement of your primary interest in the National IVHS Program Plan, a telephone number, and a fax number.

FOR FURTHER INFORMATION CONTACT: Gary Euler (Chief, Program Management and Systems Engineering Division), Federal Highway Administration, HTV-10, Ph: (202) 366-2196, Fax: (202) 366-8712 or Julie Dingle, Office of Chief Counsel, HCC-32, Federal Highway Administration, 400 Seventh Street, SW., room 3400, Washington, DC 20590, Ph: (202) 366-1394, Fax: (202) 366-7499.

SUPPLEMENTARY INFORMATION:

Background

The objective of the IVHS program is to apply advanced technology in the areas of information processing, communications, control, and electronics to improve safety, reduce congestion, increase mobility, reduce the energy and environmental harm caused by transportation, and increase economic productivity. The IVHS program also incorporates the use of strategic planning and innovative management practices at all levels of government to implement those initiatives which enhance our national surface transportation system, strengthen our economy, and benefit a broad range of users.

Universities, private sector corporations, and State governments have been incorporating innovative technologies and management practices as part of their transportation programs for a number of years. The Department of Transportation began looking at alternatives to constructing additional roadway capacity to reduce congestion as early as the 1960s. Examples of these measures include research on high occupancy vehicle lanes, ramp metering, and in-vehicle electronic route guidance systems. Federally-sponsored research on advanced transportation technology continued on a relatively small scale throughout the 1970s and 1980s.

The current IVHS program began in fiscal year 1990 with a $4 million appropriation from Congress. During the following fiscal year, Congress appropriated $20 million for the program. With the passage of the Intelligent Vehicle-Highway Systems Act (IVHS Act) (title VI, part B of the Intermodal Surface Transportation Efficiency Act of 1991, Pub. L. 102-240, 105 Stat. 1914, 2189), the program funding level rose to $233 million in fiscal year 1992 (some of which was carried over to Fiscal Year 1993) and $240 million in fiscal year 1993 (includes the carryover from 1992).

Because of the considerable public and private investment in IVHS, the Department and IVHS AMERICA began strategic planning efforts in early 1991. IVHS AMERICA is a non-profit organization whose purpose is to coordinate and promote the research and development of intelligent or "smart" vehicle highway systems in the United States. The organization also serves as a utilized Federal Advisory Committee to the Department under the Federal Advisory Committee Act (5 U.S.C. app. 2). The Department participated in the development of IVHS AMERICA's Strategic Plan for Intelligent Vehicle-Highway Systems in the United States (May 20, 1992). IVHS AMERICA developed the plan with the broad participation of its public, private, and academic member organizations. As required by the IVHS Act, the Department submitted its own report to Congress, the IVHS Strategic Plan (Publication No. FHWA-SA-93-009, December 18, 1992), which included goals, milestones, and objectives for its IVHS program. The National IVHS Program Plan will serve to detail the strategic framework provided by these two efforts.

Elements of the IVHS National Program Plan

The Plan will attempt to integrate Federal, State, and local government, and private sector activities in a single document to present a coherent picture of how the public and private sectors will work together to achieve IVHS program goals. The Plan is intended to reflect the consensus view of all parties interested in the development and deployment of IVHS. This notice explains opportunities for participating in the process of developing the Plan.

The Plan is intended to clearly present the IVHS program to Congress, other government leaders, and private sector entities. It is intended to guide investment decisions in the development and deployment of IVHS products and services to be made by private entities, the Federal government, and local governments; to facilitate prioritization and coordination of IVHS development activities; to reduce duplication of effort; and to ensure IVHS program activities are focused toward deployment of IVHS services in a nationally compatible intermodal system.

An incomplete working first draft of the Plan (October 1993) is now available. The second and final drafts are scheduled to be available in February and June of 1994, respectively. The final Plan is scheduled to be available in October 1994. In developing the second and final drafts of the Plan, the Department of Transportation will be working cooperatively with organizations, including IVHS AMERICA.

IVHS User Services

The Plan is being developed based on the set of user services described below:

1. *Pre-trip Travel Information* will allow travelers access to a broad range of multi-modal transportation information at home, work, and at other major trip sites. Information will be provided on transit routes, schedules, transfers, fares, and access to ridematching services. Also included will be updates of traffic and highway conditions, real-time information on incidents, accidents, road construction and alternate routes, traffic speeds along specific routes, parking conditions, event schedules, and weather information.

2. *En Route Driver Information* will provide the driver with in-vehicle information on incidents, roadway congestion, construction, and environmental hazards on the roadways. This information will be used by the driver to choose routes or departure times to avoid congestion.

3. *En Route Transit Information* will provide travelers with real-time, accurate, transit and ridesharing information while en route to their destinations.

4. *Traveler Services Information* will include "Yellow Pages"-type information on a variety of services including food, parking, car service/repair facilities, hospitals, and police stations. The information will be provided to travelers in the home, office, vehicle, and certain public facilities.

5. *Route Guidance* will provide drivers of both commercial and personal vehicles with in-vehicle computer mapping and routing of their destinations.

6. *Ride Matching and Reservation* will provide travelers with real-time ridematching information along with reservations and vehicle assignments.

7. *Incident Management* will use advanced sensors, data processing, and communications capabilities to identify a variety of types of incidents, formulate response actions to minimize the effects of those incidents, and support the coordination of the response.

8. *Travel Demand Management (TDM)* will generate and communicate management and control strategies which support regional policy decisions aimed at reducing the level of vehicle travel demand. Strategies to be supported with IVHS tools include enforcement of high occupancy vehicle requirements, employer-based demand management programs, and variable pricing strategies. TDM could be especially effective in helping meet regional air quality goals.

9. *Traffic Control* will use advanced technologies to monitor and predict traffic performance and to implement real time traffic responsive control strategies over an integrated, areawide roadway network in order to achieve maximum system efficiency. Traffic control strategies will allow system operators to reduce delays, energy consumption, and vehicle emissions.

10. *Electronic Payment Services* will allow travelers to pay for transportation services with electronic cards or tags. Electronic toll collection, transit fare payment, and parking payment would be linked through an intermodal multi-use smart card system.

11. *Commercial Vehicle Preclearance* will allow commercial vehicles that participate in the preclearance system to take advantage of significant savings by passing checkpoints, ports-of-entry, weigh stations, and toll booths at regular speeds. In order to use the system, commercial vehicles must be pre-cleared to be both safe and legal. Eventually, this technology will be used to pre-clear commercial vehicles through the Mexican and Canadian borders.

12. *Automated Roadside Safety Inspections* will improve the safety of commercial motor vehicle operations by providing safety inspectors with real-time access to the carrier's, vehicle's, and driver's historical record; improving roadside inspection of brake performance; and using sensors and diagnostics to efficiently check vehicle systems and driver requirements.

13. *Commercial Vehicle Administrative Processes* will allow trucking and bus companies to electronically purchase and pay for vehicle registration and other motor carrier taxes and licenses; and electronically capture mileage, fuel purchase, trip and vehicle data by State.

14. *On-Board Safety Monitoring* includes diagnostic and warning systems that will alert the commercial vehicle operator to pending emergencies while driving the vehicle.

15. *Commercial Fleet Management* will facilitate intermodal transfer of cargo and provide real-time traffic information to commercial vehicle dispatchers.

16. *Public Transportation Management* will enhance transit service operations through improved management of vehicles and facilities, planning and scheduling services, and personnel management.

17. *Personalized Public Transit* will provide flexibly-routed transit services through the use of publicly or privately operated vehicles.

18. *Emergency Notification and Personal Security* will increase safety and efficiency of emergency responses to an incident by using advanced technologies to instantly send to an appropriate dispatcher information on the location of a vehicle and the nature of an incident.

19. *Public Travel Security* will involve an array of innovative technologies to improve the safety and security of public transportation. This service will address such security concerns as protecting transit patrons and employees from street crimes, maintaining an environment of actual and perceived security, and developing innovative technical measures to respond to incidents.

20. *Emergency Vehicle Management* will use advanced technologies (e.g., route guidance, signal priority, etc.) to assist those responsible for police services, emergency medical services, and fire services in reaching destinations in minimal time.

21. *Longitudinal Collision Avoidance* will augment the vehicle operator's ability to avoid collisions with other vehicles traveling in the same direction or with other objects.

22. *Lateral Collision Avoidance* will augment the vehicle operator's ability to avoid collisions during lane changes, blind spot situations, and road departures.

23. *Intersection Crash Warning and Control* will augment the vehicle operator's ability to avoid collisions at intersections.

24. *Vision Enhancement for Crash Avoidance* will provide vehicle operators with assistance in avoiding collisions by enhancing the driver's vision during conditions of poor visibility.

25. *Safety Readiness* will provide drivers with warnings regarding their fitness to drive, the vehicle's condition, and warnings about the roadway condition as detected from the vehicle.

26. *Pre-Crash Restraint Deployment* is aimed at ameliorating the injury consequences to collision victims through pre-contact restraint activation (e.g., the air bag).

27. *Automated Vehicle Operation* will allow vehicles to operate on an instrumented roadway without driver intervention.

The deployment of these user services will depend on a range of issues that will be assessed in formulating and implementing the Plan, including cost, public acceptance, the maturity or availability of the technologies, and regulatory issues. Some services will be deployed sooner than others. The IVHS program will be continually assessed to ensure that investment and planning decisions are being made in light of the most accurate and current information available. The Plan will serve as the

framework for a continuing process that will assess progress and allow government and private sector investment decisions to be made after the views of all interested parties have been considered.

Information Requested

The Department is interested in receiving information, suggestions, and opinions on (1) the format and structure of the Plan, (2) the feasibility, milestones, and descriptions of the user services, and (3) any other comments that would assist in further developing the Plan.

The Department is also interested in improving its overall outreach activities on the program planning effort. The development of the IVHS Program Plan is an open process. The success of the IVHS program depends on the active participation of the stakeholders—public officials from State and local governments, consumer groups, private sector entities, transit authorities, metropolitan planning organizations, toll authorities, small businesses, academic institutions, associations, and individual citizens.

To facilitate stakeholder participation, the Department intends to hold forums to facilitate the direct and interactive participation of the public in the development of the IVHS Program Plan. The Department is requesting suggestions on the most appropriate, effective means for conducting these forums. Comments should address the following matters:

1. How many forums should be conducted to adequately involve the public in the Plan?
2. Where should the public forums be held?
3. Should forums address the entirety of the Plan or should some sections of the Plan be addressed individually?
4. What procedure should be followed in the forums? For example, should they be conducted similar to a town meeting (i.e., an informal public meeting with considerable free-flowing dialogue) or a public hearing (i.e., a highly structured meeting with a set agenda)? Would it be appropriate to conduct some forums through a specially-developed facilitated process (i.e., having a professional facilitator guide the meeting)?
5. What other matters should be taken into consideration in conducting the public forums?

The Department is interested in receiving suggestions on additional outreach activities which could be undertaken to improve the comprehensiveness and content of the Program Plan and thereby enhance its chances for success. Recommendations for additional outreach activities may be included in comments on the October 1993 working draft or may be submitted separately to the Docket.

References

The following references are provided in order to assist those individuals desiring further background information on the IVHS program. This is not a complete list of IVHS references.

1. Intelligent Vehicle Highway Systems Act of 1991, Public Law 102–240, title VI, part B, 105 Stat. 2189 (December 18, 1991).
2. Department of Transportation, IVHS Strategic Plan—Report to Congress (Publication No. FHWA–SA–93–009, December 1992). Available from the FHWA (HTV–10), 400 Seventh Street, SW., Washington, DC 20590, (202) 366–2196.
3. Strategic Plan for Intelligent Vehicle Highway Systems in the United States (May 20, 1992). Available from IVHS AMERICA, 1776 Massachusetts Avenue, NW., suite 500, Washington, DC 20036, (202) 857–1202.

Authority: 23 U.S.C. 315; 49 CFR 1.48; Pub. L. 102–240, Secs. 6051–6059, 105 Stat. 2189–2195.

Issued on: December 8, 1993.

Rodney E. Slater,

Federal Highway Administrator.

[FR Doc. 93–30606 Filed 12–15–93; 8:45 am]
BILLING CODE 4910–22–P

federal register

Thursday
December 16, 1993

Part IV

Department of Transportation

Federal Highway Administration

Study of Regulation of Overweight Intermodal Containers; Notice

DEPARTMENT OF TRANSPORTATION

Federal Highway Administration

[FHWA Docket No. 93-31]

Study of the Regulation of Overweight Intermodal Containers

AGENCY: Federal Highway Administration (FHWA), DOT.

ACTION: Notice; request for comments.

SUMMARY: This is a request for information to assist the Department of Transportation in responding to a provision in the Intermodal Safe Container Transportation Act of 1992 (the Act). The Act prohibits motor carriers from accepting a loaded intermodal container or trailer carrying a gross cargo weight of more than 10,000 pounds without receiving written notification of the gross cargo weight and a reasonable description of the contents of the container or trailer. The Act requires those persons tendering the container or trailer to provide a written certification of the gross cargo weight and a reasonable description of its contents. Other carriers in the intermodal chain are required to forward the written certification to subsequent carriers. In addition, the Act makes it illegal to coerce motor carriers to transport containers or trailers covered by the Act without certification, or to coerce carriers to transport intermodal containers or trailers which would violate applicable State highway weight limits when combined with a tractor and/or chassis.

The Act further requires a study of data, data needs, practical and legal impediments to data collection, and recommendations for improving the collection of data related to movements of containers in violation of the Act. This notice seeks input for this study from shippers, motor carriers, railroads, port authorities, and others interested in the intermodal transportation of loaded containers and trailers. Input may address the proposed approach, including study plan, study elements, data sources, or any other appropriate topics. The results of this study must be submitted to Congress by October 28, 1994. All responses and comments will be fully considered before the study is submitted to Congress.

DATES: Comments should be received no later than February 14, 1994.

ADDRESSES: Submit written, signed comments to FHWA Docket No. 93-31, Federal Highway Administration, room 4232, HCC-10, Office of the Chief Counsel, 400 Seventh Street, SW., Washington, DC 20590. All comments received will be available for examination at the above address between 8:30 a.m. and 3:30 p.m., e.t., Monday through Friday, except legal holidays. Those desiring notification of receipt of comments must include a self-addressed, stamped envelope or postcard.

FOR FURTHER INFORMATION CONTACT: Mr. Philip Blow, Office of Policy Development, at (202) 366-4036; Mr. Stefan Natzke, Office of Policy Development, at (202) 366-9236; or Mr. Charles Medalen, Office of Chief Counsel, at (202) 366-1354, Federal Highway Administration, Department of Transportation, 400 Seventh Street, SW., Washington, DC 20590. Office hours are from 7:45 a.m. to 4:15 p.m., e.t., Monday through Friday, except legal holidays.

SUPPLEMENTARY INFORMATION:

Background

On October 28, 1992, the President signed the Intermodal Safe Container Transportation Act of 1992 (the Act) (Pub. L. 102-548, 106 Stat. 3646). Section 3 of the Act requires the Secretary to report to the Congress on the results of a study on data collection and recommendations for improving the collection of data related to movements of containers in violation of the Act.

Intermodal transportation involves the successive movement of a loaded container or trailer by more than one transportation mode in interstate or international commerce. International container traffic mostly enters the United States through marine ports. Subsequent transportation to rail terminals or the container's ultimate destination point almost always requires some transportation on the highway system of the United States. Domestic freight traffic shipped intermodally also uses the highway network. As the intermodal transportation of goods has increased over the past several decades, it has contributed to the number of trucks travelling on the Nation's highways that exceed statutory weight limits.

A container may cause axle weight violations if loaded onto a tractor-chassis combination that has single axles rather than tandem axles; bridge formula violations if carried on a chassis too short for its weight; and, in extreme cases, gross weight violations. The bridge formula is a formula or table of allowable weights, often referred to as "bridge limits." Overweight vehicles operating on highways cause a number of other negative effects, including reducing the useful life of pavements and bridges and decreasing the safety of highway travel. Overloading also decreases vehicle braking capacity, increases stress on vehicle structures, and degrades handling.

The causes of overweight container carriage have been addressed in a number of forums, including: two FHWA reports ("Analysis of Port Import/Export Reporting Service (PIERS) Data to Reveal Potentially Overweight Container Movements on America's Highways" (March 20, 1989) and "The Problem of Moving Overweight Containers Carrying International Cargo Over America's Highways" (November 30, 1988)) and Congressional hearings (testimony of U.S. Representative Helen Delich Bentley and Deputy Assistant Secretary of Transportation for Policy and International Affairs Joseph Canny (Overweight Containers: Hearings Before the Subcommittee on Investigations and Oversight, Committee on Public Works and Transportation, 101st Cong., 2d Sess. (1990).)). Copies of the FHWA studies and the congressional testimony have been placed in the docket for public examination.

Many factors contribute to the use of illegally overweight container-carrying combinations. Such factors include: (1) The international nature of much intermodal transportation; (2) tight competition among ports for international trade; (3) the use of per-container shipping charges; (4) the competitive nature of the freight industry; (5) limited exposure to enforcement because of the shortness of pick-up or delivery trips; and (6) uncertainty on the part of motor carriers as to how the distribution of container weight will affect axle loading or compliance with the bridge formula.

International trade produces incentives to achieve the lowest unit transport costs by consolidating the maximum possible amount of goods in shipping containers or trailers. These goods may be "non-divisible" by nature (heavy marble blocks, for example), or may be considered so if travelling under a United States Customs Service seal. Furthermore, many foreign countries allow higher gross vehicle weights than does the United States. Foreign shippers may also be unfamiliar with the patchwork weight limits which apply to different highway systems in this country. Although Federal law requires States to set single axle, tandem axle, and gross weight limits for highways on the Interstate System at 20,000 pounds, 34,000 pounds, and 80,000 pounds, respectively, several States have "grandfathered" exceptions to these limits which allow greater vehicle

operating weights. The gross vehicle and axle load limits for other State highways are even more diverse.

The intense competition among ports for maritime traffic is exacerbated by the various State motor carrier laws. Even if States do not have grandfathered exceptions to the Interstate weight limits, they often issue permits for very minimal fees, that allow overweight trucks under certain conditions, including trucks transporting intermodal containers and trailers. Many States issue non-divisible load permits for sealed containers moving in international trade. Ports in States that have not exercised such exemptions are placed at a disadvantage, and are thus unlikely to take steps that would further limit their competitiveness (e.g., weighing all trucks leaving the dock). A 1991 survey of port officials conducted by the American Association of Port Authorities (AAPA) found that 52 percent of ports handling container traffic believe they are losing freight to ports in States with higher grandfathered weight limits (Landside Access to U.S. Ports, Transportation Research Board Special Report 238, 1993). By contrast, only 16 percent of non-container ports believe they lost freight to ports in States with higher weight limits.

The fee structure for transporting containers is another factor that acts as an incentive for shipping heavily laden overweight containers. Container shipping charges are often levied on a per-container basis, rather than by weight, which reflects the heavy load-carrying capacity of railroads and ships. This influences shippers to place more goods into a given container, since shipping fewer containers reduces shipping and handling costs.

The nature of the freight industry in the United States also contributes to the transportation of excessively heavy intermodal containers and trailers. Motor carriers frequently are pressured or coerced to accept containers or trailers which may result in illegally overweight vehicle combinations. A carrier that is unwilling to move a container or trailer thought to be overweight will often lose business to less scrupulous competitors. Furthermore, when motor carriers reject a container or trailer they believe is too heavy, they usually leave the terminal without a load. This results in a wasted trip and additional down-time, where they could be earning money by moving an illegally overweight vehicle despite the risk of being caught.

Another factor contributing to overweight intermodal container or trailer transport is the length of the pick-up or delivery trip. The distances travelled from ports to rail "gateways" or vice versa are often quite short. The shortness of these routes limits exposure to law enforcement, and thus works as an incentive for motor carriers to knowingly move overweight vehicle combinations. Motor carriers acting in such a way may believe they will not cause much damage, since the distance is so short, even though the damage will impact routes which serve an important role in the Nation's transportation system.

Finally, motor carriers are unable to know for certain whether containers and trailers used in conjunction with particular truck and chassis combinations will violate one or more weight limits. Depending on the distribution of weight within the container, axle load limits may be violated even though the gross vehicle weight is within the federally-mandated 80,000 pound limit or relevant State limits. Using equipment typically used by the industry, a study sponsored by the Bi-State Harbor Carriers Conference, the Steamship Operators Intermodal Committee, Maher Terminals, and the Port Authority of New York and New Jersey investigated the feasibility of distributing axle loads legally on container-carrying vehicles. After evaluating 75 combinations of tractor, trailer, and containers, the study team found that in order to comply with Interstate highway weight limits, loads should not exceed 38,000 pounds for a 20-foot container on a 27-foot chassis, or 44,000 pounds for a 40-foot container on a 40-foot chassis. Clearly, many more factors affect whether or not a tractor-trailer combination is overweight than can be currently assessed on the spot by motor carriers who lack knowledge of container or trailer weight and contents.

Using the weight thresholds established by the aforementioned test demonstration and a sample of the Journal of Commerce's Port Import/Export Reporting Service (PIERS) database of international container shipments, a 1989 FHWA study found that, of the estimated 3.2 million 20- and 40-foot containers moved through United States ports during a one-year period, 33.5 percent were carrying cargo weights which could cause a vehicle to exceed federally mandated weight limits ("Analysis of Port Import/Export Reporting Service (PIERS) Date to Reveal Potentially Overweight Container Movements on America's Highways" (March 20, 1989)). This study also found that a higher percentage of export containers (38.3 percent) would potentially violate weight laws than import containers (17 percent).

To counter some of the conditions that promote carriage by overweight vehicles, Congress passed the Intermodal Safe Container Transportation Act of 1992. The Act requires: (1) Prior written notification to the initial carrier of the gross cargo weight and a reasonable description of the contents by the person tendering a loaded container or trailer having a gross cargo weight over 10,000 pounds; (2) written certification to the initial carrier of the gross cargo weight and a reasonable description of its contents; and (3) forwarding of such certification to subsequent carriers of the container or trailer. Furthermore, the Act makes it unlawful: (1) For a motor carrier to transport a loaded container or trailer subject to the Act prior to receiving the written certification; (2) to coerce a person to transport a loaded container or trailer subject to the Act without the written certification; or (3) to coerce a motor carrier to transport a container or trailer whose weight is in excess of that permitted by applicable State law. The Act further requires the Department of Transportation to undertake a study of data, data needs, and impediments to data collection to support assessment of overweight intermodal container and trailer movements. The following presents the FHWA's proposed study plan.

Proposed Study Plan

Section 3(a) of the Act requires the Secretary of Transportation to conduct a study of the data needed to enforce the Act and State weight laws. This study is to consist of two parts. The first part will assess: (1) The existing data and data collection needs with respect to the intermodal transportation of loaded containers and trailers in violation of the Act and State highway vehicle weight laws; (2) any legal and/or practical impediments to such data collection; and (3) how such intermodal movements compare with other overweight domestic highway freight movements. The second part of the study seeks legislative and other recommendations for improving the collection of such data.

In order to address these requirements, the following proposed study plan has been developed. Those public and private entities interested in intermodal container transportation are invited to comment on all or any part of the proposed plan.

Five primary elements are required to complete the study. Each element is described in greater detail below. They are: (1) Identification of data needs,

including the identification of additional data sources; (2) the assessment of legal impediments to data collection; (3) the assessment of practical impediments to data collection; (4) the assessment of how overweight intermodal container traffic compares to other overweight freight traffic; and (5) the development of legislative and/or other recommendations for improving the collection of data.

Data Needs

Violations of the Act and violations of State motor vehicle weight laws must be assessed separately in order to allow the FHWA to identify data needs. Violations of the Act would include: (1) Failing to give prior notification or written certification of the gross cargo weight and description of contents; (2) providing false or erroneous information in the written certification; (3) failing to forward the certification; (4) coercing a motor carrier to transport an intermodal container or trailer that does not have the written certification; (5) coercing a motor carrier to move an intermodal container or trailer that would violate a State weight law; and/or (6) transporting an intermodal container or trailer without a certification.

State motor vehicle weight limit violations may include exceeding: (1) single or tandem axle weight limits; (2) gross vehicle weight limits; (3) vehicle weight limits determined by a formula or table of allowable weights (often referred to as "bridge limits"); or (4) weight limits imposed by special permit. The FHWA will determine whether data specific to intermodal container movement are collected for each of these violations. For those sources identified, the availability and statistical adequacy of the data will be evaluated. In addition, a search must be conducted to identify any relevant data sources which exist, but are not currently utilized for this purpose. Potential unknown data sources may be identified through reviews of how intermodal containers and trailers are moved in domestic and international commerce, as well as reviews of the international, Federal, and State regulation of these movements. Upon identification of additional potential sources, the adequacy of data must be assessed. Where appropriate data sources are found, the parameters of the data set and its availability, including legal and practical impediments to collection and use, would be identified.

Where relevant but statistically inadequate data sources are found, legal and practical impediments to expanding the collection of data will be identified. For example, what impediments (such as excessive cost) are involved for increasing sampling of data not currently collected in sufficient quantity to be statistically valid?

Legal Impediments

In addition to addressing data needs, the study required by the Act will include an assessment of legal impediments to collection of data. This effort will address all relevant legal impediments, such as State confidentiality laws. Legal impediments to data collection will be evaluated separately for violations of the Act and for violations of applicable State weight laws.

Practical Impediments

The assessment of the practical impediments to collection of data will include an assessment of the efficacy of collecting data on each violation of the Act relative to possible enforcement strategies. This effort will include identifying how, where, and when the data could be collected as well as who could collect the data. It will also examine and assess information-gathering technologies which could be used (such as weigh-in-motion (WIM) and electronic data interchange (EDI)). The cost of data collection will also be identified. At least one approach for collecting the data will be proposed, with an estimate of the quantity of data necessary to ensure that valid conclusions could be drawn. A plan that ensures a statistically valid sample (including the required resources) will also be developed. The reasonableness of the best approach(es) will be assessed, and possible enforcement strategies described and evaluated.

In addition, the study will identify any differences among current State vehicle weight data collection methods that specifically identify containers and trailers in intermodal freight transportation. At a minimum, the study will describe those State truck weight survey approaches which identify intermodal containers, estimate the statistical validity of those approaches, and describe how the current State survey methods could be modified to estimate the number of intermodal containers and/or trailers with a sufficient level of statistical validity. State data collection methods have shifted extensively to WIM technology (described under Data Sources below). With WIM, data are recorded automatically and unobtrusively. Vehicle weights are estimated on an axle-by-axle basis, which enables vehicle classification by axle configuration. WIM used by itself does not allow for determination of body type (for instance, whether or not the truck is carrying a trailer or container). In the future, WIM may be used in conjunction with other technologies to determine whether a vehicle is carrying an intermodal container or trailer. Current systems are not configured to detect this type of information. WIM is also not widely used at the present time for enforcement purposes, i.e., as the basis for issuing an overweight citation. The study will examine WIM's potential for gathering intermodal container and trailer data.

Finally, the study will identify any other approaches for collecting weight data on intermodal containers and trailers. This effort will identify how, where, and when the data could be collected, who could collect the data, and all associated costs for collecting the data. Again, at least one approach for data collection will be proposed. An estimate of the quantity of data necessary to ensure that valid conclusions could be drawn will be provided. A plan that ensures a statistically valid sample will be developed, along with an evaluation of the best approach(es). The plan would include a description of the resources required.

Comparison to Other Overweight Highway Vehicle Traffic

The study will determine the feasibility of comparing the characteristics of overweight intermodal container or trailer traffic with the characteristics of other overweight highway traffic. The analysis of feasibility will examine data needs and legal and practical impediments. Characteristics considered could include: the type of weight violation; associated equipment, operational, or driver violation; whether the vehicle was placed out of service; whether the operator possessed overweight operating permits valid in other states; and any other relevant characteristics.

Ideally, the study would identify the best available data on intermodal container and trailer combination weights and other variables, select a comparable sample of other tractor-chassis combinations which are not moving intermodal containers or trailers, compare the two data sets, estimate the statistical validity and cost of each sample, and draw appropriate conclusions. However, since the extent of other (non-intermodal) overweight domestic highway freight movements is itself not fully understood, this study will likely be limited to determining the requirements and feasibility of expanding current knowledge in order

to make a meaningful comparison of intermodal traffic with other domestic freight.

Legislative/Other Recommendations

The recommendations developed may address improvements to the collection of any relevant data. Legislative and/or other strategies may be needed to improve data collection from additional sources, or to improve data collection activities that are insufficient or presently not addressed. Recommendations may focus on legislation to ease, streamline, or authorize the collection of overweight carriage data for intermodal containers or trailers. This effort should specifically address such techniques as "piggy-backing" data collection efforts on current FHWA Office of Motor Carriers safety inspections. Any other innovative ideas that would ultimately improve data collection will also be considered. Non-technology-based solutions which require data collection will address the package of information required by the Office of Management and Budget (OMB) when an agency seeks to require data submission or record keeping by the private sector (e.g., for Standard Form 83). This information will include respondent burden in such data collection efforts.

Data Sources

The FHWA seeks input on data sources to fulfill the proposed study plan from shippers, motor carriers, railroads, port authorities, and others interested in the intermodal transportation of loaded containers and trailers. Below is a description of possible data sources. Information on additional sources and comments on those discussed here will help the agency meet the study requirements.

The Journal of Commerce's PIERS database provides data for international container movements through United States ports. The following information, used in the FHWA's PIERS study discussed above, will be useful in this effort: (1) Port departure date; (2) United States port through which the container moved; (3) foreign port from which the container was shipped; (4) container size; (5) cargo weight (exclusive of container tare weight); and (6) commodity shipped. These data proved highly useful in the FHWA's initial study, but they do not actually identify overweight vehicle movements, only containers which may create potentially overweight vehicle combinations. Nor do the data identify whether the container moved by rail or truck. Furthermore, the data address only international shipments and not domestic movements. Finally, this is a relatively costly data source.

Under the auspices of the FHWA Office of Highway Information Management, the States have conducted annual truck weight surveys since the 1960s. Over the past twenty years, these studies, increasingly utilizing WIM technology, have produced large amounts of data related to traffic volume, vehicle classification, and truck weight.

While this technology may be used to identify vehicles that exceed weight limits, identifying those which are operating illegally is currently impossible since many overweight vehicles operate under permit. Frequently, States issue overweight permits on an annual basis, so the actual number of overweight vehicle trips would be impossible to identify. In addition, and perhaps more critically, it is currently impossible, using WIM technology, to determine which trucks are carrying containerized or other intermodal freight. While certain aspects of vehicle configuration (such as number of axles) may be determined with some precision, actual cargo information (such as the presence of containers or intermodal trailers) may not.

One possible source of data to overcome these limitations is the expanded use of computer microchips and AVI technology. Adding cargo weight and content information to the chips in "tagged" containers would allow instantaneous transmission of the necessary information to data collection points. Several motor carriers are currently in the process of tagging all of their equipment. One intermodal operator has tagged some of its Alaskan fleet, while another has tagged all of its equipment in Hawaii. In general, however, the well-established truck lines which are adopting this technology are least likely to knowingly violate weight laws. Their motivation for adopting AVI technology arises from enhanced efficiency gains, such as instantaneously locating containers in ports. An evaluation of this data source must consider, in assessing impediments, the likelihood that independent truckers and small trucking firms will voluntarily adopt such complex and expensive technologies.

Under the Uniform Intermodal Interchange Agreement (UIIA) of the Intermodal Association of North America (IANA), when a loaded intermodal container or trailer is transported by a UIIA subscriber, its gross weight should be noted on the equipment interchange receipt and/or the bill of lading. Recording this information is not mandatory, however. While this record does not address vehicle weight, it may be useful when compared to the weight thresholds recommended by the Bi-State Harbor Carriers Conference in estimating movements of overweight intermodal transport vehicles in a manner similar to the PIERS study. In this way, the expected maximum weight for a given container size may be used to predict which combinations are overweight. For example, the Bi-State Harbor Carriers Conference found that a 20-foot container on a 27-foot chassis should not exceed 38,000 pounds. Those containers over 38,000 pounds may thus lead to overweight truck/trailer/container combinations. The legal and practical impediments of using this data source are currently unknown.

Finally, Occupational Safety and Health Administration (OSHA) regulations (29 CFR 1917) require terminals to weigh export containers prior to loading ships to ensure the container's weight does not exceed the crane's or container's limitations. While these data do not provide vehicle weight information, and provide post-movement information only, they may also be useful when used in conjunction with the Bi-State Harbor Carriers Conference results as described above. A known limitation of these data is that they cover export containers only.

Comments

Comments on the study described above are sought from all parties interested in the intermodal transportation of loaded containers and trailers. Those interested in reviewing a draft of the final report to Congress may also submit their names to Mr. Philip Blow or Mr. Stefan Natzke, Office of Policy Development, at the address shown above, or may include such a request with any comments submitted to the docket. Comments may address, but need not be limited to, the following questions:

1. Is the study plan adequate? How can it be improved? Does the study approach fulfill the intent of the Intermodal Safe Container Transportation Act of 1992 (the Act)?

2. What data may be used to identify how many loaded containers and trailers move in violation of the Act? Do any other data sources capture container movements independently of shipping documents (e.g., bills of lading)? Do they record weight of the loaded container or trailer? Do they capture vehicle weight?

3. What data may be used to determine the distribution of violation

type? For example, how may one determine the percentage of violations of the notification/certification requirement, or coercion prohibition?

4. What data will determine the percentage of container-carrying trucks moving in violation of the Interstate weight limits? The percentage violating other State weight laws?

5. How can the percentage of violations involving overweight axles (single or tandem) for container-carrying vehicles be gauged? The percentage violating bridge or statutory limits? Will these data be useful in assessing how violations of axle load or bridge limits compare to violations of gross vehicle weight (GVW) laws (i.e., the percentage of vehicles in compliance with GVW laws that exceed other weight limits)?

6. What is the best way to assess the prevalence of coercion? What is the best approach for capturing coercion data? Would any data source (e.g., Teamster grievance files) capture coercion? Would these data be available for the study?

7. How can compliance with the certification forwarding requirement best be evaluated?

8. What is the best source of information for determining the prevalence of intermodal container and trailer transportation without the required certification? Note that final regulations regarding the certification requirement of the Act have not yet been published.

9. Does the study method proposed here overlook any factors which contribute to overweight intermodal container or trailer traffic?

10. If useful data sources are collected in insufficient quantities, would significant costs be involved in expanding data collection? What are the small business, Paperwork Reduction Act, or other ramifications of such expansion?

11. Which additional data sources could reasonably be developed to capture intermodal movements of containers and trailers in violation of the Act? What sources may be used to compare these movements with other overweight movements? What are the legal and practical impediments to the use of these data sources?

12. Do any innovative techniques exist in other countries for assessing the overweight movement of intermodal containers or trailers? If so, could similar techniques be used in the United States?

13. What is an acceptable level of statistical confidence needed to reliably estimate the necessary figures?

14. Are any significant regional or geographic differences expected in the movement of overweight intermodal containers or trailers? How do regional or geographic variations in intermodal container or trailer movements compare to regional or geographic variations in other overweight movements? What study design would best compensate for these differences?

15. What other relevant questions should be addressed in the study?

Authority: Pub. L. 102–548, 106 Stat. 3646; 49 U.S.C. 501, 508, 521; 23 U.S.C. 315; 49 CFR 1.48.

Issued on: December 8, 1993.

Rodney E. Slater,

Federal Highway Administrator.

[FR Doc. 93–30603 Filed 12–15–93; 8:45 am]

BILLING CODE 4910-22-P

federal register

Thursday
December 16, 1993

Part V

Department of Transportation

Federal Highway Administration

49 CFR Part 7
Public Availability of Information; Freedom of Information Act; Rule

Federal Highway Administration

49 CFR Part 7

RIN 2125–AC20

Public Availability of Information; Freedom of Information Act

AGENCY: Federal Highway Administration (FHWA), DOT.

ACTION: Final rule.

SUMMARY: The FHWA is revising the existing appendix to the regulations which provide for public availability of information, implementing the Freedom of Information Act. This document updates the addresses of the offices where requests for information can be filed, hours of operation of each office, the records available at the agency's document inspection facilities, and the changes in designated officials having authority to deny requests for disclosure of records. Amendments are necessary to ensure prompt processing of Freedom of Information Act requests within the FHWA.

EFFECTIVE DATE: December 16, 1993.

FOR FURTHER INFORMATION CONTACT: Ms. Barbara Spruill, HMS–11, Office of Information and Management Services, (202) 366–9089, or Mr. Steven Rochlis, (202) 366–0761, Office of the Chief Counsel, Federal Highway Administration, 400 Seventh Street, SW., Washington, DC 20590. Office hours are from 7:45 a.m. to 4:15 p.m., ET., Monday through Friday, except legal holidays.

SUPPLEMENTARY INFORMATION: The Department of Transportation's regulations implementing the Freedom of Information Act (5 U.S.C. 552) are contained in 49 CFR Part 7—Public Availability of Information. These regulations were last revised on August 11, 1988 at 53 FR 30265.

This notice amends appendix D of part 7 of 49 CFR, listing the current locations and hours of operation of the Document Inspection Facilities for the FHWA. It also amends the listing of documents available at the agency's Document Inspection Facilities, as well as lists records available by telephone or electronically. The amendment to the appendix D also addresses the changes in designated officials having authority to deny initial requests for disclosure of records, and the commensurate changes in appropriately addressing requests for various types of agency records. Effective October 1, 1992, the delegation of authority to issue initial denials of requests for information was changed from the agency's FOIA Officer to the Associate Administrators, the Staff Office Directors, the Regional Administrators, and the Federal Lands Highway Program Administrator, who in turn, were given authority to further redelegate denial authority.

Rulemaking Analyses and Notices

Since this rulemaking relates to departmental management, organization, procedure, and practice, notice and comment on it are unnecessary and they may be made effective in fewer than thirty days after publication in the Federal Register.

Executive Order 12866 (Regulatory Planning and Review) and DOT Regulatory Policies and Procedures

The FHWA has determined that this document does not contain a significant regulatory action under Executive Order 12866 or is significant within the meaning of Department of Transportation regulatory policies and procedures. Since this rulemaking relates to departmental management, organization, procedure, and practice, it is anticipated that the economic impact of this rulemaking will be minimal; therefore, a full regulatory evaluation is not required.

Regulatory Flexibility Act

In compliance with the Regulatory Flexibility Act (5 U.S.C. 601–612), the FHWA has evaluated the effects of this rule on small entities. Based on the evaluation, and since this rulemaking relates to departmental management, organization, procedure, and practice, the FHWA hereby certifies that this action will not have a significant economic impact on a substantial number of small entities.

Executive Order 12612 (Federalism Assessment)

This action has been analyzed in accordance with the principles and criteria contained in Executive Order 12612, and it has been determined that this action does not have sufficient federalism implications to warrant the preparation of a federalism assessment.

Executive Order 12372 (Intergovernmental Review)

Catalog of Federal Domestic Assistance Program Number 20.205, Highway Planning and Construction. The regulations implementing Executive Order 12372 regarding intergovernmental consultation on Federal programs and activities apply to the program.

Paperwork Reduction Act

This action does not contain a collection of information requirement for purposes of the Paperwork Reduction Act of 1980, 44 U.S.C. 3501 *et seq.).*

National Environmental Policy Act

The agency has analyzed this action for the purpose of the National Environmental Policy Act of 1969 (42 U.S.C. 4321 *et seq.*) and has determined that this action would not have any effect on the quality of the environment.

Regulation Identification Number

A regulation identification number (RIN) is assigned to each regulatory action listed in the Unified Agenda of Federal Regulations. The Regulatory Information Service Center publishes the Unified Agenda in April and October of each year. The RIN number contained in the heading of this document can be used to cross reference this action with the Unified Agenda.

List of Subjects in 49 CFR Part 7

Administrative practice and procedure, Freedom of Information, Records.

Issued on: December 8, 1993.

Rodney E. Slater,

Federal Highway Administrator.

In consideration of the foregoing, the FHWA hereby amends 49 CFR part 7 by revising appendix D to read as set forth below.

PART 7—PUBLIC AVAILABILITY OF INFORMATION

1. The authority citation for part 7 continues to read as follows:

Authority: 5 U.S.C. 552; 31 U.S.C. 9701; 49 U.S.C. 322.

2. Part 7 is amended by revising appendix D to read as follows:

Appendix D to Part 7—Federal Highway Administration

1. General

This appendix describes the location and hours of operation of the document inspection facilities of the Federal Highway Administration (FHWA); the kinds of records that are available for public inspection and copying at these facilities; and the procedures by which members of the public may make requests for records.

2. Document Inspection Facilities

Document inspection facilities are maintained at the Federal Highway Administration Headquarters, each regional office, and each division office. Except for legal public holidays and other special closings, these facilities are open to the public, Monday through Friday, during regular working hours, which are included after each address below. Written requests for information under the Freedom of Information Act should be sent to the

appropriate office, and the envelope in which the request is sent should be prominently marked with the letters "FOIA" (see paragraph 4 below).

Washington Headquarters

FOIA Program Officer (HMS-10), Federal Highway Administration, 400 Seventh Street, SW., room 4428, Washington, DC 20590. 7:45 a.m.-4:15 p.m. ET.

Regional Offices

Regional Federal Highway Administrator, Region 1, Federal Highway Administration, Clinton Avenue and North Pearl Street, room 719, Albany, NY 12207. 7:30 a.m.-4 p.m. ET. (Connecticut, Maine, Massachusetts, New Hampshire, New Jersey, New York, Puerto Rico, Rhode Island, Vermont, Virgin Islands)

Regional Federal Highway Administrator, Region 3, Federal Highway Administration, 10 South Howard Street, suite 4000, Baltimore, MD 21201. 7:30 a.m.-4:15 p.m. ET. (Delaware, District of Columbia, Maryland, Pennsylvania, Virginia, West Virginia)

Regional Federal Highway Administrator, Region 4, Federal Highway Administration, suite 200, 1720 Peachtree Road, NW., Atlanta, GA 30367. 7:45 a.m.-4:15 p.m. ET. (Alabama, Florida, Georgia, Kentucky, Mississippi, North Carolina, South Carolina, Tennessee)

Regional Federal Highway Administrator, Region 5, Federal Highway Administration, 18209 Dixie Highway, Homewood, IL 60430-2294. 7:30 a.m.-4:15 p.m. CT. (Illinois, Indiana, Michigan, Minnesota, Ohio, Wisconsin)

Regional Federal Highway Administrator, Region 6, Federal Highway Administration, 819 Taylor Street, room 8A00, P.O. Box 902003, Fort Worth, TX 76102. 8 a.m.-4:30 p.m. CT. (Arkansas, Louisiana, New Mexico, Oklahoma, Texas)

Regional Federal Highway Administrator, Region 7, Federal Highway Administration, 6301 Rockhill Road, P.O. Box 419715 (64141), Kansas City, MO 64131. 7:30 a.m.-4 p.m. CT. (Iowa, Kansas, Missouri, Nebraska)

Regional Federal Highway Administrator, Region 8, Federal Highway Administration, 555 Zang Street, room 400, Lakewood, CO 80228. 7:45 a.m.-4:15 p.m. MT. (Colorado, Montana, North Dakota, South Dakota, Utah, Wyoming)

Regional Federal Highway Administrator, Region 9, Federal Highway Administration, 211 Main Street, room 1100, San Francisco, CA 94105. 7:45 a.m.-4:15 p.m. PT. (Arizona, California, Hawaii, Nevada, Guam, American Samoa)

Regional Federal Highway Administrator, Region 10, Federal Highway Administration, KOIN Center, suite 600, 222 SW. Columbia Street, Portland, OR 97201. 7:45 a.m.-4:30 p.m. PT. (Alaska, Idaho, Oregon, Washington)

Division Offices

Alabama, 500 Eastern Boulevard, suite 200, Montgomery, AL 36117-2018. 7 a.m.-4:30 p.m. CT.

Alaska, 709 W. Ninth Street, room 851, P.O. Box 21648, Juneau, AK 99802 1648. 7:30 a.m.-5 p.m. Alaska Time.

Arizona, 234 N. Central Avenue, suite 300, Phoenix, AZ 85004. 7:30 a.m.-4:15 p.m. MT.

Arkansas, Federal Office Building, room 3128, 700 West Capitol Avenue, Little Rock, AR 72201-3298. 7:30 a.m.-4 p.m. CT.

California, 980 Ninth Street, suite 400, P.O. Box 1915 (95812-1915), Sacramento, CA 95814. 7:45 a.m.-4:30 p.m. PT.

Colorado, 555 Zang Street, room 250, Lakewood, CO 80228. 7:45 a.m.-4:15 p.m. MT.

Connecticut, Abraham A. Ribicoff Federal Building, 450 Main Street, room 635, Hartford, CT 06103. 7:30 a.m.-4 p.m. ET.

Delaware, 300 South New Street, room 2101, Dover, DE 19901-6726. 7:45 a.m.-4:15 p.m. ET.

District of Columbia, Union Center Plaza, suite 750, 820 First Street, NE., Washington, DC 20002. 7:30 a.m.-4 p.m. ET.

Florida, 227 N. Bronough Street, room 2015, Tallahassee, FL 32301. 7:30 a.m.-4 p.m. ET.

Georgia, 1720 Peachtree Rd., NW., suite 300, Atlanta, GA 30367. 7 a.m.-4 p.m. ET.

Hawaii, Prince Jonah Kuhio Kalanianaole Federal Building, 300 Ala Moana Boulevard, room 3202, Box 50206, Honolulu, HI 96850. 7:30 a.m.-4 p.m. HT.

Idaho, 3050 Lakeharbor Lane, suite 126, Boise, ID 83703. 7:30 a.m.-4 p.m. MT.

Illinois, 3250 Executive Park Drive, Springfield, IL 62705. 7:30 a.m.-4:15 p.m. CT.

Indiana, 575 N. Pennsylvania Street, room 254, Indianapolis, IN 46204. 7:30 a.m.-4 p.m. ET.

Iowa, 105 Sixth Street, P.O. Box 627, Ames, IA 50010. 7:45 a.m.-4:30 p.m. CT.

Kansas, 3300 South Topeka Boulevard, suite 1, Topeka, KS 66611-2237. 7:45 a.m.-4:15 p.m. CT.

Kentucky, John C. Watts Federal Building and U.S. Courthouse, 330 W. Broadway, P.O. Box 536, Frankfort, KY 40602. 8 a.m.-4:45 p.m. ET.

Louisiana, Federal Building, room 255, 750 Florida Street, P.O. Box 3929 (70821), Baton Rouge, LA 70801. 7:30 a.m.-4 p.m. CT.

Maine, Edmund S. Muskie Federal Building, 40 Western Avenue, room 614, Augusta, ME 04330. 7:30 a.m.-4 p.m. ET.

Maryland, The Rotunda, suite 220, West 40th Street, Baltimore, MD 21211, 7:45 a.m.-4:15 p.m. ET.

Massachusetts, 55 Broadway, 10th Floor, Cambridge, MA 02142. 7:45 a.m.-4:15 p.m. ET.

Michigan, Federal Building, room 211, 315 West Allegan Street, Lansing, MI 48933. 7:45 a.m.-4:15 p.m. ET.

Minnesota, Metro Square Building, suite 490, Seventh and Robert Streets, St. Paul, MN 55101. 7:30 a.m.-4 p.m. CT.

Mississippi, 666 North Street, suite 105, Jackson, MS 39202-3199. 7:30 a.m.-4 p.m. CT.

Missouri, 209 Adams Street, P.O. Box 1787 (65102), Jefferson City, MO 65101. 7:30 a.m.-4 p.m. CT.

Montana, Federal Office Building, 301 South Park, Drawer 10056, Helena, MT 59626-0056. 7:30 a.m.-4 p.m. MT.

Nebraska, Federal Building, room 220, 100 Centennial Mall North, Lincoln, NE 68508-3851. 7:30 a.m.-4:15 p.m. CT.

Nevada, 705 North Plaza Street, suite 220, Carson City, NV 89701. 7:45 a.m.-4:30 p.m. PT.

New Hampshire, Federal Building, room 204, 279 Pleasant Street, Concord, NH 03301. 7:30 a.m.-4 p.m. ET.

New Jersey, Suburban Square Building, 2nd Floor, 25 Scotch Road, Trenton, NJ 08628-2595. 8 a.m.-4:30 p.m. ET.

New Mexico, 604 West San Mateo Road, Santa Fe, NM 87501-1963. 7:30 a.m.-4 p.m. MT.

New York, Leo W. O'Brien Federal Building, 9th Floor, Clinton Avenue and North Pearl Street, Albany, NY 12207. 7:30 a.m.-4 p.m. ET.

North Carolina, 310 New Bern Avenue, P.O. Box 26806, Raleigh, NC 27611. 7:45 a.m.-4:15 p.m. ET.

North Dakota, Federal Building, P.O. Box 1755, 220 East Rosser Avenue, Bismarck, ND 58502. 7:45 a.m.-4:30 p.m. CT.

Ohio, 200 North High Street, room 328, Columbus, OH 43215. 7:30 a.m.-4:15 p.m. ET.

Oklahoma, Federal Office Building, room 454, 200 NW. Fifth Street, Oklahoma City, OK 73102. 7:30 a.m.-4 p.m. CT.

Oregon, The Equitable Center, suite 100, 530 Center Street, NE., Salem, OR 97301. 7:30 a.m.-4:15 p.m. PT.

Pennsylvania, 228 Walnut Street, P.O. Box 1086, Harrisburg, PA 17108. 8 a.m.-4:30 p.m. ET.

Puerto Rico, Frederico Degetau Federal Building and U.S. Courthouse, Carlos Chardon Street, room 329, Hato Rey, PR 00918. 7:30 a.m.-4 p.m. AT.

Rhode Island, 380 Westminster Mall, Fifth Floor, Providence, RI 02903. 7:45 a.m.-4:15 p.m. ET.

South Carolina, Strom Thurmond Federal Building, 1835 Assembly Street, suite 758, Columbia, SC 29201. 7:45 a.m.-4:15 p.m. ET.

South Dakota, Federal Building, room 337, 225 South Pierre Street, P. O. Box 700, Pierre, SD 57501. 8 a.m.-4:30 p.m. CT.

Tennessee, 249 Cumberland Bend Drive, Nashville, TN 37228. 8 a.m.-4:30 p.m. CT.

Texas, Federal Office Building, 300 East Eighth Street, room 826, Austin, TX 78701. 7:30 a.m.-4:15 p.m. CT.

Utah, 2520 West 4700 South, suite 9A, Salt Lake City, UT 84118. 7:30 a.m.-4 p.m. MT.

Vermont, Federal Building, 87 State Street, P.O. Box 568 (05601), Montpelier, VT 05602. 7:30 a.m.-4 p.m. ET.

Virginia, Federal Building, 10th Floor, 400 N. 8th Street, P.O. Box 10045, Richmond, VA 23240. 7:30 a.m.-4 p.m. ET.

Virgin Islands, U.S. Federal Building and U.S. Courthouse, room 281, Charlotte Amalie, St. Thomas, VI 00801. (8:30-12:30 AST) 7:30 a.m.-11:30 a.m. ET.

Washington, suite 501, Evergreen Plaza, 711 S. Capitol Way, Olympia, WA 98501. 7:30 a.m.-4:30 p.m. PT.

West Virginia, 550 Eagan Street, suite 300, Charleston, WV 25301. 8 a.m.-4:30 p.m. ET.

Wisconsin, 4502 Vernon Boulevard, Madison, WI 53705–4905. 7:30 a.m.–4:15 p.m. CT.

Wyoming, 1916 Evans Avenue, Cheyenne, WY 82001–3764. 7:45 a.m.–4:30 p.m. MT.

Federal Lands Highway Division Offices

Division Engineer, Eastern Federal Lands Highway Division, Loudoun Tech Center, 21400 Ridgetop Circle, Sterling, VA 22170. 7:45 a.m.–4:15 p.m. ET.

Division Engineer, Central Federal Lands Highway Division, 555 Zang Street, P. O. Box 25246 (Denver 80225), Lakewood, CO 80228. 7:45 a.m.–4:15 p.m. MT.

Division Engineer, Western Federal Lands Highway Division, 610 East Fifth Street, Vancouver, WA 98661. 8 a.m.–4:30 p.m. PT.

3. Records Available Through Document Inspection Facilities

(a) The following records are available through the FHWA Headquarters document inspection facility:

(1) Final opinions (including concurring and dissenting opinions, if any) and orders made in the adjudication of cases and issued by the Federal Highway Administration;

(i) Motor Carrier Safety Administrative Rulings adopted by the Associate Administrator for Motor Carriers, issued by an Administrative Law Judge in the adjudication of motor carrier enforcement cases, and decisions of the Associate Administrator. (See also documents available at Regional Document Inspection Facilities).

(ii) Motor Carrier Safety Waivers From Regulations (including Handicapped Driver Waiver Program), containing records of the decisions made to specific applicants for specific waivers from certain motor carrier safety regulations.

(2) Any policy or interpretation issued by the Federal Highway Administration, including any policy or interpretation concerning a particular factual situation, if that policy or interpretation can reasonably be expected to have precedential value in any case involving a member of the public in a similar situation.

(i) Environmental Guidebook, a comprehensive compilation of interpretations of the environmental regulations and environmental law. (See also paragraph 3.(b)(6)(i).)

(ii) Motor carrier regulatory interpretations.

(3) Electronic files, available for downloading from the Federal Highway Electronic Bulletin Board (FEBBS) (dial (202) 366–3764), or viewing/copying from the screen, which include such items as:

(i) The Federal-Aid Policy Guide (FAPG) (compressed version), a single source documentation of the FHWA's current policies, regulations and nonregulatory procedural guidance primarily related to the Federal-aid Highway Program;

(ii) The Directives system (index listing, compressed version), a numerical/subject cross reference listing of current Orders, Notices, and Technical Advisories issued by FHWA;

(iii) Title 23, United States Code (USC) (compressed version); the most up to date version of the Code, with any approved changes incorporated;

(iv) Intermodal Surface Transportation Efficiency Act of 1991 (ISTEA), Pub. L. 102–240, 105 Stat. 1914;

(v) Title 23, Code of Federal Regulations (CFR) (compressed version); the most up to date version of the 23 CFR, with all approved changes incorporated;

(vi) Policy memoranda and questions and answers on the Intermodal Surface Transportation Efficiency Act of 1991 (ISTEA), and various planning related statistics and information;

(vii) T2: Technology Transfer Conference plus Transportation Research Board (TRB) Research Abstracts listing;

(viii) National Highway Institute (NHI) Course Schedule and other NHI information; and

(4) Anti-drug abuse regulatory information maintained by the Anti-drug Information Center (ADIC), which can be searched or downloaded by telephone (voice and FAX) at 1–800–225–3784 (24-hour access) or searched/downloaded by use of a modem at 1–800–225–3804 for the Department of Transportation's anti-drug programs. This includes the anti-drug regulations for the motor carrier industry, some of the most commonly asked questions regarding the regulations, and interpretation and elaborations of regulations.

(b) The following records are generally available through Federal Highway Administration document inspection facilities, with the exception of Federal Lands Highway Division Offices, which do not have copies of Motor Carrier materials, and other exceptions as noted:

(1) *FHWA Orders*, used primarily to promulgate internal policy, instructions, and general guidance.

(2) *FHWA Notices*, containing short term instructions or information which is expected to remain in effect for a predetermined period of time normally not to exceed one year.

(3) *FHWA Bulletins*, issued by the agency and used to promulgate one time announcements or transmit reports, publications, and other similar material.

(4) *Technical Advisories (TAs)*, containing permanent or long-lasting detailed techniques or technical material that is advisory in nature.

(5) *FHWA Manuals*, issued by the Federal Highway Administration and containing detailed procedures, standards, and guides relating to the administration of the Federal-aid Highway Program, the Federal Lands Highway Program, and the Motor Carrier Program. They include the following:

(i) Federal-Aid Policy Guide (FAPG), an organized, looseleaf, single source documentation of the FHWA's current policies, regulations and nonregulatory procedural guidance information related to the Federal-aid Highway Program. A small portion of these materials relates to the agency's Federal Lands Highway Program and State and Community Highway Safety Program.

(ii) Department of Transportation (DOT) Organizational Manual (DOT ORDER 1100.63), issued by the Office of the Secretary of Transportation and describing the organization of FHWA and the mission and functions of each principal organizational unit.

(iii) Labor Compliance Manual, used as a guide in Federal-aid Highway Program and Federal Lands Highway Program construction projects, to assure compliance with federal labor laws by the highway construction contractors.

(iv) Motor Carrier Management Manual, used as a general management guide for administering the motor carrier program.

(v) Manual on Uniform Traffic Control Devices (MUTCD), a publication of the Federal Highway Administration, setting forth basic principles that govern the design and usage of traffic control devices, and current traffic control device design and application standards. Section 1A–7 of the MUTCD incorporates, by reference, several other publications.

(vi) Standard Specifications for Construction of Roads and Bridges on Federal Highway Projects, FP–92, 1992, based on the AASHTO Guide Specifications for Highway Construction, used as a guide by the Federal Lands Highway Program for construction of roads and bridges on Federal Lands Highway projects. (Available in the Headquarters and Federal Lands Highway Program division offices document inspection facilities.)

(vii) U.S. DOT FHWA Construction Manual, for Use as a Guide for FHWA Personnel (1985), used as a guide for the construction of roads and bridges within federally owned and administered parks and lands. (Available in the

Headquarters and Federal Lands Highway Program division offices document inspection facilities.)

(viii) Emergency Relief-Disaster Assistance Manual (Publication No. FHWA–ED–88–001), providing instructions on procedures for FHWA, State, and local highway agency personnel involved in Federal-aid Highway system emergencies (severe damage to highways as a result of a major catastrophe or natural disaster), including guidance for evaluating damage and preparing the documents necessary to support the use of Emergency Relief (ER) funds.

(ix) Emergency Relief Manual for Federal Roads Off the Federal-aid System (FHWA Technical Advisory T 5180.2), containing detailed program guidance for the administration of emergency relief for Federal roads, i.e., roads and trails administered by the National Park Service, the Bureau of Indian Affairs, the Forest Service, and the Bureau of Land Management. (Available in the Headquarters and Federal Lands Highway Program division offices' document inspection facilities. Some regional and division offices may have copies.)

(6) *Guidelines/determinations,* guidelines or determinations containing details of compliance programs, accident investigations, enforcement programs, and interpretations.

(i) Environmental Guidebook, a comprehensive, compilation of interpretations of the environmental regulations and environmental law, federal government-wide, with procedural guidance, policy memos, and implementation instructions. (Complete files available in the Washington headquarters document inspection facility.)

(ii) Highway Safety Guidelines, highway-related guidelines applying to those provisions of the State and Community Highway Safety Program under the Highway Safety Act of 1966 (title 23, U.S. Code, chapter 4) and delegations of authority by the Secretary of Transportation, for which responsibility resides in the FHWA.

(c) The following information is available by telephone.

(1) *Motor Carrier Safety Ratings,* a specific designation of safety fitness assigned to each interstate motor carrier relative to the extent of compliance or non-compliance with motor carrier safety regulations, available by telephone request at (800) 832–5660. (Ratings can also be obtained for a specific motor carrier by written request to the Office of Motor Carrier Information Management, HIA–1, Federal Highway Administration, 400 Seventh Street, SW., Washington, DC 20590.)

(2) *ADIC* (Anti-drug Information Center), containing anti-drug abuse regulatory information for the Department of Transportation's anti-drug programs, including the anti-drug regulations for the motor carrier industry, some of the most commonly asked questions regarding the regulations, and interpretation and elaborations of regulations, which can be accessed by telephone at 1–800–225–3784 (24-hour access). (See paragraph 3.(a)(4) of this appendix regarding electronic information.)

4. Requests for Records Under Subpart F of This Part

Each person desiring to inspect a record, or to obtain a copy thereof, should submit a request, in writing, to the appropriate Federal Highway Administration official at the address listed in paragraph 2, Document Inspection Facilities. If it is not known where in FHWA the record(s) sought may be found, the request may be submitted to the FOIA Program Officer, Washington headquarters, at the address given in paragraph 2, Document Inspection Facilities, above. Generally, all requests pertaining to the Motor Carrier Program should be submitted to the FOIA Program Officer at the Washington headquarters office except as noted in subparagraph (b). The following provides an illustration of types of records available and specifies where requests for such records are appropriately addressed:

(a) Examples of records for which requests may properly be made to the FHWA FOIA Program Officer (Washington headquarters):

(1) Copies of Motor Carrier Accident Reports. (FHWA eliminated the requirements for this report, effective March 3, 1993; consequently, FHWA will not have accident report forms for accidents occurring after March 3, 1993.)

(2) Records on specific motor carriers or specific motor carrier files.

(3) Copies of contracts or requests for proposals (RFP's).

(4) Copies of research and development (R&D) project records, excluding published reports.

(b) Examples of records for which requests may properly be made to the FHWA Regional Offices:

(1) Copies of administrative records for the entire region, for example, personnel and financial management records.

(2) Copies of records pertaining to region-wide implementation of FHWA programs.

(3) Copies of Final Orders of the Agency which may include: negotiated Settlement Agreements, Notices of Claim (to which a motor carrier has failed to reply), and Out-of-Service Orders.

(c) Examples of records for which requests may properly be made to the FHWA Division Offices:

(1) Copies of records pertaining to specific Federal-aid highway projects.

(2) Copies of environmental studies for Federal-aid highway projects.

(d) Examples of records for which requests may properly be made to the appropriate FHWA Federal Lands Highway (FLH) Division Offices:

(1) FLH project records.

(2) FLH contract files.

5. Determinations Not To Disclose Records

Authority to issue initial determinations, including initial denials of access to records and of fee waivers or fee waiver reductions has been delegated to all FHWA Associate Administrators, Staff Office Directors, Regional Administrators, and the Federal Lands Highway Program Administrator. Each of these officials is also authorized to redelegate this authority to subordinate officials.

6. Reconsideration of Determinations Not To Disclose Records and To Deny Fee Waivers

Any person who has been notified that a record or part of a record that has been requested will not be disclosed, or could not be found, or that a request for a fee waiver or reduction will not be granted, may appeal, in writing, to the Associate Administrator for Administration, Federal Highway Administration, 400 Seventh Street SW., Washington, DC 20590, for reconsideration of the determination. A copy of the appeal letter should be simultaneously sent to the office which made the initial determination. The decision of the Associate Administrator for Administration is administratively final.

[FR Doc. 93–30631 Filed 12–15–93; 8:45 am]

BILLING CODE 4910–22–P

federal register

Thursday
December 16, 1993

Part VI

Department of Transportation

Federal Highway Administration

23 CFR Part 657
Certification of Size and Weight Enforcement; Proposed Rule

DEPARTMENT OF TRANSPORTATION

Federal Highway Administration

23 CFR Part 657

[FHWA Docket No. 93-28]

RIN 2125-AC60

Certification of Size and Weight Enforcement

AGENCY: Federal Highway Administration (FHWA), DOT.

ACTION: Advance notice of proposed rulemaking; request for comments.

SUMMARY: The FHWA is considering proposing changes to the guidance provided to State highway agencies for preparing annual vehicle size and weight certifications and enforcement plans. Improvements in data collection and scale technology since publication of the existing regulation in 1980 lead the FHWA to believe that a more effective use of these developments may improve this program. Public comment is requested on the type of information and data that should be submitted by States to support an effective enforcement plan, and their annual vehicle size and weight enforcement certifications.

DATES: Comments on this docket must be received on or before March 16, 1994.

ADDRESSES: Submit written, signed comments, to FHWA Docket No. 93-28, Federal Highway Administration, room 4232, HCC-10, Office of the Chief Counsel, Federal Highway Administration, 400 Seventh Street, SW., Washington, DC 20590. All comments received will be available for examination at the above address between 8:30 a.m. and 3:30 p.m., e.t., Monday through Friday except legal Federal holidays. Those desiring notification of receipt of comments must include a self-addressed, stamped postcard.

FOR FURTHER INFORMATION CONTACT: Mr. Thomas Klimek, Office of Motor Carrier Information Management (202-366-2212) or Mr. Charles Medalen, Office of the Chief Counsel (202-366-1354), Federal Highway Administration, 400 Seventh Street, SW., Washington, DC 20590. Office hours are from 7:30 a.m. to 4 p.m., e.t., Monday through Friday, except legal Federal holidays.

SUPPLEMENTARY INFORMATION:

Background

To preserve the Nation's investment in the Interstate Highway System, Congress established in 1956 vehicle weight limits for the Interstate System (23 U.S.C. 127) and beginning in 1974 required each State to certify annually that it is enforcing its size and weight laws (23 U.S.C. 141). The Federal-aid Highway Act of 1978, Public Law 95-599, 92 Stat. 2689, authorized the Department of Transportation to require that each State provide information in its certification sufficient to allow evaluation of the State's weight enforcement program. In 1980, the FHWA promulgated a regulation, 23 CFR part 657, Certification of Size and Weight Enforcement, detailing the information needed from the States to evaluate the State's weight enforcement program. In addition, the States were required annually to prepare vehicle size and weight enforcement plans. Each State's plan was to be the basis against which its enforcement program as summarized in its certification was to be evaluated.

Currently, States provide in their annual certifications to the FHWA, due on January 1 of each year, such information as the number of trucks weighed by scale type, and the total number of citations issued by type of violation. Permits issued by type, the number of off-loads and load shifts, and changes to the State's vehicle size and weight laws and regulations related to permit fees and overweight fines are also reported.

A State's vehicle size and weight enforcement plan contains, among other information, an inventory of facilities and equipment, fiscal and personnel resources, enforcement practices and procedures, program goals, and an evaluation of current operations. A State's plan is to be provided to the FHWA for review by July 1 and is to be accepted and in effect by October 1 of each year.

Problems With the Existing Certification and Enforcement Plan Procedures

1. The Magnitude and Location of the Overweight Vehicle Problem are Unknown

The FHWA has had more than 10 years of experience using data provided by the States to evaluate the effectiveness of State vehicle size and weight enforcement programs. While year-to-year comparisons of such information as vehicles weighed and citations issued provide some indication of the effectiveness of the State's program, the basic questions about the magnitude and location of the overweight vehicle problem remain unanswered.

The 1991 State certifications showed that of more than 150 million vehicles weighed, 655,000 were illegally overweight. This information demonstrates very good compliance; only 0.4 percent of all vehicles weighed were in violation. However, data from Weigh-In-Motion (WIM) surveys and weigh scale bypass studies show much higher percentages of overweight vehicles. In these surveys and studies, it is not uncommon to find that 10 to 20 percent of the vehicles weighed are overweight. While a certain number of these vehicles are operating legally with an overweight permit issued by the States, the data reported in the State's certifications appear to underrepresent the number of overweight vehicles in actual operation.

2. Operational Tolerances at Scales Are Common Despite Federal Law

Federal law (23 U.S.C. 127) prohibits "enforcement tolerances" on the Interstate System unless a State has a grandfather right to allow them. In addition, non-statutory tolerances off the Interstate are an indication of inadequate enforcement of State law, and thus conflict with the requirements of 23 U.S.C. 141. A minor exception is the tolerance for portable scales (wheel-load weighers) in part 658 that was adopted to compensate for inherent limits on the accuracy of this equipment.

Despite this rather consistent rejection of tolerances, many States continue to use them. A recent report on the FHWA's size and weight program by the Department of Transportation's Inspector General (IG) (Report Number RO-FH-2-003, issued November 21, 1991) found that enforcement agencies in six of the eight states audited allowed overweight tolerances, both on and off the Interstate, for which they had no statutory authority.

There are two general reasons for tolerances. First, States may adopt them to avoid antagonizing important economic groups. Farmers, loggers, sand and gravel haulers, construction companies, and certain other carriers often load in the field, where scales are not available, and many States once gave such local interests partial exemptions from weight limits in the form of tolerances. Product-specific tolerances discriminated against other truckers, however, and where tolerances are allowed today, they are usually available to all carriers irrespective of commodity.

Second, some judges reject cases involving weights not significantly above a statutory limit because they do not believe the scales used are sufficiently precise to make fine distinctions. Preferring to err in favor of the defendant, these judges create

informal, and probably inconsistent, tolerances. If enforcement officials are unable to persuade the courts that their scales are accurate enough to measure the amount of the overweight cited, they have little choice but to adopt the courts' "rule(s) of thumb." The FHWA agrees that enforcement efforts should not exaggerate the accuracy of a particular scale or type of scale, but most tolerances appear to be considerably larger than the margin of error of the scales involved.

Modern platform scales are complex electro-mechanical devices. In many places they are exposed to a wide range of climatic conditions, with variable maintenance schedules, yet are expected to weigh tens or hundreds of thousands of vehicles with very high consistency and accuracy. They achieve that goal, by and large, but some deviations from a true weight cannot be completely avoided. The best information on the accuracy of scales is found in "Handbook 44," published annually by the National Institute of Standards and Technology (NIST), U.S. Department of Commerce.[1]

According to the 1992 edition of Handbook 44, a permanently installed platform scale may be certified accurate with a tolerance of 0.1 percent if new, and 0.2 percent if it is being recertified. This means that a new scale weighing a vehicle with a 20,000-pound single axle, a 34,000-pound tandem, and an 80,000-pound gross weight could have a margin of error of 20, 34, and 80 pounds, respectively. In other words, it could report the axle and gross weight values as anything between 19,990–20,010 pounds, 33,983–34,017 pounds, and 79,960–80,040 pounds, respectively. If the scale had been recertified, the range of error would expand to 40, 68 and 160 pounds, and the scale could produce values between 19,980–20,020 pounds, 33,966–34,034 pounds, and 79,920–80,080 pounds, respectively. Semi-portable scales are less accurate, and fully portable scales are the most difficult to calibrate precisely. In 1984, when the current regulation was adopted, the FHWA estimated that wheel-load weighers are usually accurate to within two to three percent; the rule permits States to allow a tolerance not to exceed five percent when using portable scales (23 CFR 658.17(f)).

The IG found that State tolerances on single axles ranged from 400 to 1,000 pounds, on tandem axles from 499 to 1,000 pounds, and on gross weight from 499 to 1,600 pounds. These tolerances appear to be far larger than necessary to account for platform scale error, but they may bear some relationship to the achievable accuracy of semi-portable or portable scales. Yet all of the States investigated by the IG allowed these tolerances on their most modern platform scales as well as their less accurate equipment.

The FHWA believes the prohibition on tolerances in 23 U.S.C. 127 was intended to prevent States from granting *de facto* exceptions to the weight limits under political pressure from economic interests. However, scales are not infallibly accurate, and we do not believe Congress intended to require States to issue citations for overweight violations that fall within the demonstrable margin of error of the scales used. Section 658.17(e) allows a tolerance because of the inaccuracy of portable scales, and it may be appropriate to apply that principle to other types of scales. The FHWA is therefore seeking public comment from enforcement agencies, scale manufacturers, and the motor carrier industry on ways to create a tolerance based on the margin of error of scales without simply creating a "loophole" for overweight vehicles.

A related but somewhat different problem involves what might be called "citation tolerances," i.e., the practice of citing only the violation that carries the heaviest penalty, even though the vehicle may exceed several different Federal weight limits. The single axle, tandem axle, bridge formula, and maximum gross weight limits in section 127 are separate legal requirements, and without a grandfather right, a State may not exempt from prosecution a violation of any one of them. Several States have been put on notice in recent years that the single-citation rule amounts to a tolerance of the other violations and that sanction procedures to withhold Federal-aid funds will be undertaken unless the State begins to cite all violations discovered or demonstrates a grandfather right not to do so. Commenters should keep this in mind when they address the issue of weight tolerances.

3. Preparation of Enforcement Plans and Certifications Is Time Consuming

The States spend an estimated 4,160 hours preparing each year's certifications and enforcement plans. Some States go beyond Federal requirements in preparing their enforcement plans and certifications, thus providing unnecessary though sometimes interesting information. Other States provide minimally acceptable levels of information or information in a format other than that described in the existing regulation.

4. Not all States Are Taking Advantage of Improved Data Collection to Enhance Program Management and Effectiveness

The FHWA review of State vehicle enforcement plans and certifications suggests that the data collected, the data collection equipment and procedures, and the reporting format all need to be reexamined. Advances in data collection equipment, data analysis and reporting, coupled with continuing limitations on personnel and financial resources, suggest that improved data management can enhance the effectiveness of enforcement plans and the statistical support of certifications. For example, data currently reported in State certifications do not indicate which commercial groups are major contributors to the overweight vehicle problem. There is also no indication who the repeat violators are. These data are needed to plan an effective enforcement program. States need to be encouraged to use the latest data management systems in their enforcement programs.

5. The Amount of Pavement Wear Attributable to Vehicles With Special Permits Is Unknown

Federal law (23 U.S.C. 127) allows States to issue special overweight load permits on Interstate highways where the load cannot be easily dismantled or divided. In addition, if a State had laws in effect on July 1, 1956, allowing the issuance of special overweight permits for divisible loads (grandfather rights), the State can continue to issue such permits. All States issue overweight permits for non-divisible loads, and 32 States issue permits for divisible loads. Ten of these States have begun issuing divisible load permits since 1982, when the Surface Transportation Assistance Act (Pub. L. 97–424, 96 Stat. 2097) allowed States to determine their grandfather rights. In addition to single-trip divisible and non-divisible load permits, 27 States also issue multiple-trip, divisible load permits, and 33 States issue multiple-trip, nondivisible load permits. From 1984 to 1989 the number of multiple-trip divisible load permits issued increased an average of 8.7 percent per year, while the number of multiple-trip non-divisible load permits issued increased an average of 14.5 percent per year. Because the FHWA does not require the number of trips made under each multiple-trip permit to be reported, the added pavement and bridge damage costs

[1] NIST Handbook 44, 1993 ed., "Specifications, Tolerances, and Other Technical Requirements for Weighing and Measuring Devices," U.S. Department of Commerce, NIST, Gaithersburg, MD, October 1992.

resulting from issuing multiple-trip permits is unknown.

6. Permit Fee and Overweight Fine Schedules Do Not Always Reflect True Costs

The Department's National Transportation Policy (NTP)[2] strongly advocates permit fees that are commensurate with the cost of repairing damage to roads and bridges caused by overweight vehicles. The fees should also cover all administrative expenses and enforcement costs associated with the permit program. States determine the fees to be charged for overweight permits as well as penalties to be assessed for violating vehicle size and weight laws. Current permit fee and overweight fine schedules are reported annually to the Congress in the FHWA's publication Overweight Vehicles—Penalties & Permits.[3] In 1989, the average permit fee for a 4000-pound gross weight overload was $16.78, and the average fine for a 4,000 pound overload was $182.25. Permit fees ranged from no charge to $60 for 4000 pounds overweight. The fine for 4,000 pounds overweight ranged from $10 to $700. If the cost of pavement damage ranges between 4 and 16 cents per ESAL-mile (ESAL stands for an 18,000-pound equivalent single axle load and is the primary measure of pavement wear used in the United States), the cost of an 84,000-pound vehicle traveling 100 miles would be between $16 and $64.

As can be seen, there is a wide range among States in both permit fees and overweight fines. State overweight fine schedules also need to be based on recovering the full cost of bridge and pavement wear done by those responsible for operating illegally overweight vehicles including enforcement and administrative costs.

7. Enforcement Plans Lack Specific, Measurable Goals

Another weakness discovered in reviewing States enforcement plans is that they often lack specific, measurable goals. Since the enforcement plan is the primary criterion against which the effectiveness of the State's size and weight enforcement program is to be measured, plan goals need to be specific and measurable.

8. There Is Inadequate Vehicle Size and Weight Enforcement in Some Urban Areas

States that do not have vehicle size and weight enforcement jurisdiction in urban areas are required to evaluate the weight enforcement efforts of the local jurisdictions. These analyses are to include identifying the urban areas not under State jurisdiction and reporting the number of Federal-aid highway miles in the urban areas. The States are also asked for a narrative discussion of enforcement in these areas. While such discussions often include the number of vehicles weighed, citations issued, coordinated State and local weight enforcement efforts, and a summary of training efforts, many do not.

Because States do not have jurisdiction in these areas, they do not feel responsible for reporting the required information. Because cities do not have the equipment and expertise for vehicle size and weight enforcement, they do not report the information to the States for inclusion in the States' enforcement plan and certification. Accordingly, it is difficult to judge urban weight enforcement from a national perspective.

9. Sanction Procedures Do Not Clearly Identify State Settlement Options

If a State fails to certify as required by FHWA regulations, sanction procedures can be implemented to reduce by 10 percent the highway funds that would otherwise be apportioned to the State for the next fiscal year. If the Secretary of Transportation determines that the State is not adequately enforcing State size and weight laws on Federal-aid highways, sanction procedures can also be implemented to reduce apportioned highway funds by 10 percent. If State laws applicable to the Interstate highways are not consistent with weight limits found in 23 U.S.C. 127, sanction procedures can be implemented to withhold all National Highway System funds to be apportioned to the State for the next fiscal year.

The sanction procedures found in 23 CFR 657.21 do not clearly indicate the options available to a State for resolving conflicts between Federal and State laws, or issues involving degree of enforcement. Sanction procedures and penalties are somewhat different depending on the reason for implementing sanctions. These differences are not clearly indicated in the FHWA regulation.

Request for Comments

The FHWA solicits comments from all interested persons on how to address the problems discussed above, as well as any other aspect of the current size and weight enforcement process. Specific answers are sought in regard to the following questions, which are arranged in the same order as the problem areas discussed above:

1. Magnitude and location of the overweight vehicle problem are unknown.

(a) Would it be feasible to develop a procedure for determining the magnitude and location of illegal overweight vehicles which could list the percentage of illegal overweight vehicles by highway system, season, and time of day?

(b) What would be the added cost for a database system capable of reporting the magnitude and location of the illegal overweight vehicle problem? The cost estimated should include equipment and person-hours needed to determine the magnitude and location of the illegal overweight vehicle problem, but not the cost of current enforcement and reporting requirements.

(c) Is the percentage of illegal overweight vehicles by highway system, further stratified by season and time of day, needed to effectively evaluate the level of compliance and plan for enforcement? If not, how does your State or how would you recommend the level of compliance and the effectiveness of enforcement be determined?

(d) Should the content of enforcement plans be left to each State, or should FHWA mandate the inclusion of a certain core group of enforcement approaches (such as WIM) and relevant evidence, to which a State would add other techniques as needed?

2. Operational tolerances at scales are common despite Federal law.

(a) Should an operational tolerance for enforcement purposes be recognized and accounted for, or should the theoretical status quo with respect to tolerances be maintained (i.e., prohibition)?

(b) If an operational tolerance were to be considered, should it be a fixed amount, or some percentage of the scale reading?

(c) How large an operational tolerance should be granted for each type of scale?

(d) Should a different tolerance be established for each major category of weight control, i.e., single axle, tandem axle, bridge formula, and gross weight?

(e) Should application of any scale tolerance be mandatory or be decided by weighmaster on a per vehicle basis?

[2] Moving America: New Directions, New Opportunities; A Statement of National Transportation Policy Strategies for Action, U.S. Department of Transportation, February 1990. Available from the Office of the Assistant Secretary for Public Affairs, Office of the Secretary of Transportation, 400 Seventh Street SW., room 10414, Washington, DC 20590.

[3] Overweight Vehicles—Penalties & Permits: An Inventory of State Practices for Fiscal Year 1991, Report 13, Report to Congress from the Secretary of Transportation, U.S. Department of Transportation, Federal Highway Administration, April 1993, No. FHWA-MC-93-001.

3. Preparation of enforcement plans and certifications is time consuming.

(a) What, if any, changes to Federal regulation (23 CFR part 657) do you recommend regarding the preparation requirements and processing procedures for the enforcement plan and certification?

4. Not all States are taking advantage of improved data innovations.

(a) With respect to vehicle size and weight enforcement, has your State within the last couple of years evaluated its data needs, data collection equipment and procedures, and internal reporting requirements? If so, please summarize the findings.

(b) What is your State's current procedure for collecting and analyzing the data needed to meet certification reporting requirements?

5. Pavement wear attributed to vehicles with special permits is unknown.

(a) Has your State determined pavement and bridge costs attributed to vehicles operating under special permit? If so, please describe the methodology.

(b) Does your State have a computerized permit data management system that reports permits by type, i.e., single trip non-divisible load, single trip divisible load, multiple-trip non-divisible load, and multiple-trip divisible load? If so, please describe your program.

(c) Can your State determine from its permit application system the number of trips made under multiple-trip permits, the length of each trip, or axle weights?

(d) Please provide your ideas on the feasibility of determining a true cost of a special permit program, including pavement and bridge, enforcement, and administrative costs.

6. Permit fee and overweight fine schedules do not always reflect true costs.

(a) What is the basis for the current overweight permit fee and fine structures in your State? Do the fees and fines include the cost of pavement and bridge wear? Administrative costs? Enforcement costs?

7. Enforcement plans lack specific, measurable goals.

(a) Is it practicable to use national standards for evaluating the adequacy of enforcement, e.g., number of enforcement officers per mile of Federal-aid highway, number of vehicles weighed per gallon of diesel fuel sold, number of weigh scales per vehicle mile of vehicle travel, etc.? If so, what measures do you recommend?

(b) By what date does your State need FHWA comments on its annual certification in order to include them in its next year's enforcement plan?

8. There is inadequate vehicle size and weight enforcement in some urban areas.

(a) Should the FHWA revise its regulations to require an annual evaluation of the vehicle size and weight enforcement effort in all cities over a population threshold such as, for example, 200,000, rather than in just those cities where the State does not have jurisdiction?

(b) What is recommended to improve enforcement coordination between the State and cities?

9. Sanction procedures do not clearly identify State settlement options.

(a) What changes to Federal regulations are recommended regarding resolution of conflicts over the level of enforcement and conformance of State and Federal law?

Rulemaking Analyses and Notices

All comments received before the close of business on the final day of the comment period indicated above will be considered and will be available for examination in the docket at the above address. Comments received after the closing date will be filed in the docket and will be considered to the extent practicable. In addition to late comments, the FHWA will also continue to file in the docket relevant information that becomes available after the closing date, and interested persons should continue to examine the docket for new material.

Executive Order 12866 (Regulatory Planning and Review) and DOT Regulatory Polices and Procedures

The FHWA has determined that this action is not a "significant regulatory action" within the meaning of Executive Order 12866 or "significant" within the meaning of Department of Transportation regulatory polices and procedures. Due to the preliminary nature of this document and lack of necessary information on costs, FHWA is unable to evaluate the economic impact of potential changes to the regulatory requirements concerning the certification of size and weight enforcement. Based on the information received in response to this notice, the FHWA intends to carefully consider the costs and benefits associated with various alternative requirements. Comments, information, and data are solicited on the economic impact of the potential changes.

Regulatory Flexibility Act

Due to the preliminary nature of this document and lack of necessary information on costs, the FHWA is unable to evaluate the effects of the potential regulatory changes on small entities. Based on the information received in response to this notice, the FHWA intends, in compliance with the Regulatory Flexibility Act (5 U.S.C. 601 *et seq.*), to carefully consider the economics impacts of these potential changes on small entities. The FHWA solicits comments, information, and data on these impacts.

Executive Order 12612 (Federalism Assessment)

This action has been analyzed in accordance with the principles and criteria contained in Executive Order 12612, and it has been determined that this action does not have sufficient federalism implications to warrant the preparation of a federalism assessment.

Executive Order 12372 (Intergovernmental Review)

Catalog of Federal Domestic Assistance Program Number 20.205, Highway Planning and Construction. The regulations implementing Executive Order 12372 regarding intergovernmental consultation on Federal programs and activities apply to this program.

Paperwork Reduction Act

This action does not contain a collection of information requirement for purposes of the Paperwork Reduction Act of 1980, 44 U.S.C. 3501 *et seq.*

National Environmental Policy Act

The agency has analyzed this action for the purpose of the National Environmental Policy Act of 1969 (42 U.S.C. 4321 *et seq.*) and has determined that this action would not have any effect on the quality of the environment.

Regulation Identification Number

A regulation identification number (RIN) is assigned to each regulatory action listed in the Unified Agenda of Federal Regulations. The Regulatory Information Service Center publishes the Unified Agenda in April and October of each year. The RIN contained in the heading of this document can be used to cross reference this section with the Unified Agenda.

List of Subjects in 23 CFR Part 657

Enforcement, Enforcement Plan, Highways and roads, Sanctions, and Vehicle size and weight certification.

Authority: 23 U.S.C. 127, 141, and 315; 49 CFR 1.48(b).

Issued on: December 8, 1993.

Rodney E. Slater,

Federal Highway Administrator.

[FR Doc. 93–30604 Filed 12–15–93; 8:45 am]

BILLING CODE 4910–22–P

federal register

Thursday
December 16, 1993

Part VII

Department of Education

Graduate Assistance in Areas of National Need Program; Inviting Applications for New Awards for Fiscal Year 1994; Notice

DEPARTMENT OF EDUCATION

[CFDA NO.: 84.200]

Graduate Assistance in Areas of National Need Program; Inviting Applications for New Awards for Fiscal Year (FY) 1994

Purpose of Program: This program provides fellowships through academic departments and programs of institutions of higher education to assist graduate students of superior ability who demonstrate financial need. The purpose of the program is to sustain and enhance the capacity for teaching and research in areas of national need.

Eligible Applicants: An academic department of an institution of higher education that meets the requirements in 34 CFR 648.2.

Deadline for Transmittal of Applications: February 14, 1994.

Deadline for Intergovernmental Review: April 15, 1994.

Applications Available: December 30, 1993.

Available Funds: $18,386,000 for new awards.

Estimated Range of Awards: $100,000–$750,000.

Estimated Average Size of Awards: $190,000.

Estimated Number of Awards: 80.

Note: The Department is not bound by any estimates in this notice.

Project Period: Up to 36 months.

Applicable Regulations: (a) The Education Department General Administrative Regulations (EDGAR) in 34 CFR parts 74, 77, 79, 82, 85, and 86; and (b) The regulations in 34 CFR part 648 as published elsewhere in this issue of the **Federal Register.**

SUPPLEMENTARY INFORMATION: The Graduate Assistance in Areas of National Need Program furthers National Education Goal 4, that U.S. students will be first in the world in science and mathematics achievement, and Goal 5, that every adult American will be literate and will possess the knowledge and skills necessary to compete in a global economy and exercise the rights and responsibilities of citizenship. The program furthers both goals by providing fellowship assistance to increase the number of teachers with a substantive background in mathematics and science, as well as increase the number of graduate students who complete degrees in mathematics, science, and engineering. The program also furthers these goals by providing fellowship assistance to graduate students so that these students can provide an example for American youth on the importance of continued learning throughout an individual's life.

Institutional Payment

The Secretary estimates that the institutional payment for academic year 1994–1995 will be $9,245, which represents a 2.7 percent adjustment of the academic year 1993–1994 payment based on the Department of Labor's projection in April 1993 of the Consumer Price Index for 1993. The Secretary will adjust the institutional payment prior to the issuance of grant awards based on the Department of Labor's projection in December 1993 of the Consumer Price Index for 1993.

Priorities

Absolute Priorities

Under 34 CFR 75.105(c)(3) and 34 CFR 648.3, the Secretary gives an absolute preference to applications that meet one or more of the following priorities. The Secretary funds under this competition only applications that meet one or more of these absolute priorities:

Applications that propose to provide fellowships in one or more of the following areas of national need: Biology, Chemistry, Engineering, Foreign Languages, Mathematics, and Physics.

Invitational Priority

Within the absolute priority, the Secretary is particularly interested in applications that meet the following invitational priority. However, under 75.105(c)(1) an application that meets this invitational priority does not receive competitive or absolute preference over other applications:

Applications that propose to provide fellowships in Foreign Languages other than French, German, Italian and Spanish.

For Applications or Information Contact

Celeste B. Felious, U.S. Department of Education, Division of Higher Education Incentive Programs, 400 Maryland Avenue, SW., room 3022, ROB–3, Washington, DC 20202–5251. Telephone: (202) 708–9419. Individuals who use a telecommunications device for the deaf (TDD) may call the Federal Information Relay Service (FIRS) at 1–800–877–8339 between 8 a.m. and 8 p.m., Eastern time, Monday through Friday.

Information about the Department's funding opportunities, including copies of application notices for discretionary grant competitions, can be viewed on the Department's electronic bulletin board (ED Board), telephone (202) 260–9950; or on the Internet Gopher Server at GOPHER.ED.GOV (under Announcements, Bulletins and Press Releases). However, the official application notice for a discretionary grant competition is the notice published in the **Federal Register.**

Program Authority: 20 U.S.C. 11341–1134q-1.

Dated: September 10, 1993.

David A. Longanecker,

Assistant Secretary for Postsecondary Education.

[FR Doc. 93–30616 Filed 12–15–93; 8:45 am]

BILLING CODE 4000–01–P

federal register

Thursday •
December 16, 1993

Part VIII

Department of Education

34 CFR Part 648

Graduate Assistance in Areas of National Need; Rule

DEPARTMENT OF EDUCATION

34 CFR Part 648

RIN 1840-AB66

Graduate Assistance in Areas of National Need

AGENCY: Department of Education.

ACTION: Final regulations.

SUMMARY: The Secretary implements regulations for the Graduate Assistance in Areas of National Need (GAANN) program. The program originally was enacted in the Education Amendments of 1980 and was amended by the Higher Education Amendments of 1992. These regulations incorporate statutory requirements and provide rules for applying for and spending Federal funds under this program.

EFFECTIVE DATE: These regulations take effect 45 days after publication in the **Federal Register** or later if the Congress takes certain adjournments. If you want to know the effective date of these regulations, call or write the Department of Education contact person. A document announcing the effective date will be published in the **Federal Register**.

FOR FURTHER INFORMATION CONTACT: Carolyn Proctor-Kelly. Telephone: (202) 708-9419. Individuals who use a telecommunications device for the deaf (TDD) may call the Federal Information Relay Service (FIRS) at 1-800-877-8339 between 8 a.m. and 8 p.m., Eastern time, Monday through Friday.

SUPPLEMENTARY INFORMATION: These regulations implement the GAANN program authorized under title IX, part D, of the Higher Education Act of 1965 (HEA), as amended by the Higher Education Amendments of 1992 (Pub. L. 102-325). This program provides fellowships through academic departments of institutions of higher education to assist graduate students of superior ability who demonstrate financial need. The purpose of the program is to sustain and enhance the capacity for teaching and research in areas of national need.

The GAANN program furthers National Education Goal 4, that U.S. students will be first in the world in science and mathematics achievement, and Goal 5, that every adult American will be literate and will possess the knowledge and skills necessary to compete in a global economy and exercise the rights and responsibilities of citizenship. The program furthers both goals by providing fellowship assistance to increase the number of teachers with a substantive background in mathematics and science, as well as increase the number of graduate students who complete degrees in mathematics, science, and engineering. The program also furthers these goals by providing fellowship assistance to graduate students so that these students can provide an example for American youth on the importance of continued learning throughout an individual's life.

On June 16, 1993, the Secretary published a notice of proposed rulemaking for this program in the **Federal Register** (58 FR 33224). In this notice, the Secretary solicited public comment on the proposed regulations.

Analysis of Comments and Changes

In response to the Secretary's invitation in the NPRM, 13 parties submitted comments on the proposed regulations. An analysis of the comments follows.

Major issues are grouped according to subject, with appropriate sections of the regulations referenced in parentheses. Other substantive issues are discussed under the section of the regulations to which they pertain.

Technical and other minor changes—and suggested changes the Secretary is not legally authorized to make under the applicable statutory authority—are not addressed.

Areas of National Need—(§ 648.3/ Appendix)

Comments: One commenter suggested that the Secretary limit the list of areas of national need in the appendix to those that are the most likely to be designated for support. The commenter believes that by listing every conceivable discipline in which one might receive a doctoral degree, the proposed regulations go beyond the areas originally envisioned as "national needs."

Another commenter suggested that the Secretary maintain funding of disciplines that have traditionally been funded under the program. The commenter believes that this will allow the Secretary to conduct longitudinal studies to determine if program funding has produced a greater number of U.S. doctorates within these fields. The commenter also fears that many institutions may not be able to continue projects without continued program funding. Finally, this commenter suggested that, before adding new areas of national need, the Secretary consult with graduate deans at institutions nationwide to determine where there are critical needs for teaching and research.

Discussion: The Secretary agrees that the academic areas listed in the appendix should be limited to those that are the most likely to be selected as areas of national need. The Secretary has limited the academic areas on the list to those disciplines and subdisciplines that Departmental studies project will have a significant shortfall at the Ph.D level in the year 2005, or are listed in section 943(b) of the HEA.

The Secretary has not yet determined which disciplines will be designated as areas of national need. The Secretary does not intend, however, automatically to fund disciplines that have traditionally been funded under the program. Pursuant to section 943(b) of the HEA, the Secretary will consult with the National Science Foundation, the National Academy of Sciences, the National Endowment for the Arts and the Humanities, and other appropriate Federal and nonprofit agencies and organizations about areas to be designated as areas of national need. After these consultations, the Secretary will designate areas of national need for the fiscal year 1995 competition, and annually thereafter.

Finally, the Secretary does not intend to consult directly with graduate deans at institutions nationwide regarding which areas will be designated as areas of national need. Rather, pursuant to section 943(b) of the HEA, the Secretary plans to consult with such nonprofit organizations as the Association of American Universities and the Council of Graduate Schools which represent the interests of graduate deans of institutions.

Changes: The Secretary has changed the title of the appendix from "Area of National Need Priorities" to "Academic Areas" and limited the list in the appendix to the academic areas that are the most likely to be selected as areas of national need.

Definition of Academic Year—(§ 648.9(b))

Comments: One commenter suggested changing the definition of academic year to mean the 9-10 month period commencing with the fall instructional term of the institution, rather than 12 months as proposed by the Secretary The commenter suggested that the current $10,000 stipend for a 12-month period is unreasonably low compared to other fellowship stipends due to the fact that a fellow's financial need is determined over a 12-month, rather than a 9-10 month, period.

Discussion: The Secretary does not agree with the change suggested by this commenter. The Secretary believes that many institutions have 12-month academic programs. In addition, the

Secretary believes a fellow's financial need—and therefore, the amount of the stipend received by a fellow—should be calculated over an entire year in order to account for summer income earned by a fellow.

Changes: None.

Selection Criteria—(§ 648.31)

Rankings of Academic Departments as Indicator of Quality of Academic Program—(§ 648.31(c)(4))

Comments: Several commenters questioned the Secretary's use of rankings of academic departments among similar graduate academic programs in § 648.31(c)(4) of the proposed regulations as a means of evaluating the quality of graduate academic programs. First, commenters believe that these ranking systems are often based on faulty data. Second, commenters believe that the data contained within these rankings may be obsolete since they are not based on regular and recent evaluations. Third, commenters believe that these rankings wrongly favor large, long-established programs, which may not be the best type of institutions to fulfill the purposes of the program. Finally, many commenters contend that no national rankings are given to certain programs.

One commenter suggested placing the burden on the applicant to demonstrate the quality of their programs. This commenter would have academic departments submit data concerning faculty publications and citations, numbers of doctorates produced, and employment records of recent graduates as a demonstration of the quality of their academic program. Another commenter suggested that the Secretary request information from expert reviewers or an institution's recent record in training doctorate students. This commenter also suggested that the Secretary publish the list of applying departments and solicit comment on their quality. Finally, another commenter suggested deleting § 648.31(c)(4) and relying instead on the other measures in § 648.31(c)(1)–(3) of the proposed regulations in determining the quality of an academic department.

Discussion: The Secretary agrees that § 648.31(c)(4) of the proposed regulations should be revised to permit an applicant to provide any evidence that it deems appropriate to demonstrate the quality of its academic program. Examples of such evidence are rankings of an academic program among similar type programs, data concerning faculty publications and citations, numbers and ethnic/gender diversity of doctorates produced, and employment records of graduates.

Changes: The Secretary revises § 648.31(c)(4) of the regulations to provide that, in reviewing the quality of an academic department, the Secretary will review "[a]ny other evidence the applicant deems appropriate to demonstrate the quality of its academic program." The Secretary has deleted § 648.31(c)(4) of the proposed regulations which provided that the quality of an applicant's academic program will be determined, in part, by "[t]he ranking of the academic department among similar graduate academic programs."

Additions or Deletions of Selection Criteria

Comments: Commenters suggested adding and deleting certain considerations in the selection criteria. One commenter suggested that past performance be a key factor in determining which academic departments receive funding. Another commenter suggested that the qualifications of the faculty should be deleted as a measure of the quality of an academic department. This commenter does not believe that the quality of an academic department's faculty is indicative of the quality of the academic department. Lastly, one commenter suggested that the Secretary add to the selection criteria a criterion to evaluate how an academic department will use its institutional payment.

Discussion: The Secretary does not believe an applicant should be awarded extra points for accomplishing the goals it established for a past grant since a grantee is expected to accomplish these goals. The Secretary does agree that the fact that an applicant failed to accomplish its stated goals on a past grant should be taken into account in selecting applicants for new awards. The Secretary, however, does not believe that a change in the regulations is necessary. Section 75.217(d)(3) of title 34 of the CFR, which is made applicable to this program under § 648.48(a)(3) of the regulations, authorizes the Secretary to consider the applicant's use of funds under a previous award under this program in determining the order in which applications will be selected for awards.

The Secretary believes that the qualifications of an academic department's faculty are indicative of the quality of an academic department. One of the best learning experiences for a student is through interaction with qualified faculty. Therefore, the quality of an academic department's faculty will greatly determine the strength of an academic department.

Finally, the Secretary does not agree that the selection criteria should be used to evaluate how an academic department will use its institutional payment since these uses are already specified in § 648.62. The Secretary does not believe a department should receive points for demonstrating how it will comply with these rules.

Changes: None.

Weighting of Selection Criteria

Comments: One commenter suggested that the Secretary accord more weight to the recruitment plan and the institution's effectiveness in enrolling and nurturing high quality students from traditionally underrepresented backgrounds, and less weight to the quality of the academic graduate program. The commenter believes that this change is necessary to reflect the emphasis on outreach to traditionally underrepresented backgrounds in the Higher Education Amendments of 1992.

Discussion: The Secretary believes that an institution's recruitment plan and effectiveness in enrolling and nurturing high quality students from traditionally underrepresented backgrounds are essential to the program. Section 942(b)(1) of the HEA, however, provides that the "principal criterion" for the allocation of awards shall be the relative quality of the graduate programs presented in competing applications. Pursuant to this statutory mandate, the Secretary has accorded the most weight under the selection criteria to the quality of a graduate program.

Changes: None.

Selection of Fellows—(§ 648.40)

Comments: Several commenters suggested that the Secretary allow permanent residents to be eligible for fellowships in doctoral degree programs that will lead to an academic career. These commenters believe that these students are likely to stay in the United States and that their participation in the program will strengthen the program by increasing the number of qualified candidates.

One commenter stated that the distinction between eligibility based on whether a fellow is pursuing an academic or a nonacademic career is impossible to implement. This commenter stated that most students enrolled in doctoral studies have no way of reliably predicting whether they will in fact end up in an academic or nonacademic career.

One commenter questioned the meaning of § 648.40(d), which provides that an individual who satisfies the general criteria for eligibility in

§ 648.40(a) and either § 648.40 (b) or (c), but who attends an institution that does not offer the highest degree available in their course of study, is eligible for a fellowship if the individual plans subsequently to attend an institution that offers this degree. This commenter suggested that this requirement conflicts with the nature of the program, which awards grants to academic programs or departments. The commenter questioned how an institution could receive funding to provide support to a group of fellows if it did not offer a doctoral degree in the field in which these fellows are enrolled.

Discussion: The Secretary agrees that the same citizenship requirements should apply to all individuals applying for fellowships. The Secretary has deleted proposed § 648.40(b) which required that individuals enrolled in doctoral degree programs that will lead to an academic career be citizens of the United States.

The Secretary agrees with the comment that a student is unable to determine whether he or she will ultimately end up in an academic career. Section 648.40(c) of the regulations, however, does not require that a student actually end up in an academic career—only that he or she certify that he or she is pursuing this career.

Finally, an academic department need not offer the terminal degree in a discipline to receive a grant under this program. Section 942(a)(1) of the HEA provides that grants may be awarded to academic departments and programs and other academic units of institutions of higher education that provide courses of study leading to a graduate degree. Therefore, there is no inconsistency in the regulations.

Changes: The Secretary has revised proposed § 648.40 to apply the same residency requirements to all individuals applying for fellowships. The Secretary will no longer require that individuals enrolled in doctoral degree programs leading to academic careers be citizens of the United States. The Secretary has added a new paragraph to § 648.40(a)(8) requiring that all eligible individuals be (1) United States citizens or nationals; (2) permanent residents of the United States; (3) in the United States for other than a temporary purpose and who intend to become permanent residents; or (4) permanent residents of the Trust Territory of the Pacific Islands. The Secretary also has deleted proposed § 648.40 (b) and (c).

Amount of a Stipend—(§ 648.51)

Comments: One commenter suggested that the amount of a stipend awarded to a student should be able to exceed a fellow's demonstrated level of financial need. The commenter believes that limiting the amount of a stipend in this manner lessens the attractiveness of GAANN fellowships to more talented students. This commenter also believes that this limitation causes accounting problems for institutions that promise the National Science Foundation (NSF) amount to an incoming student, but that later can provide only an amount equal to the fellow's financial need.

Another commenter suggested that monies received by a fellow from a partial teaching assistantship or another stipend should not be included in calculating a fellow's financial need for the purposes of determining the amount of a fellow's stipend.

Several commenters suggested changing § 648.51 of the proposed regulations. Two commenters suggested that all fellows should receive stipend amounts equalling the NSF amount (adjusted as necessary so as not to exceed the fellow's financial need), regardless of whether they received their fellowship prior to or after academic year 1993–94. Another commenter suggested that all fellows should receive the level of support provided under the law prior to the 1992 Amendments, which was the fellow's financial need or $10,000, whichever was less, not the NSF amount.

Discussion: The Secretary is not authorized to provide a stipend amount that exceeds a fellow's demonstrated level of financial need. Section 945(b) of the HEA clearly provides that the level of stipend support must equal the support provided by NSF graduate fellowships, *"except such amount shall be adjusted as necessary so as not to exceed the fellow's demonstrated level of need"* (emphasis added).

Section 648.9 of the regulations defines financial need to mean the fellow's financial need as determined under Title IV, Part F, of the HEA for the period of the fellow's enrollment in the approved field of study for which the fellowship was awarded. Title IV, Part F, of the HEA sets forth a detailed formula for determining financial need.

As a general rule, stipends awarded under other financial assistance programs and monies received from teaching assistantships would be taken into account in calculating financial need under the title IV, part F, needs analysis. Section 471 of the HEA provides that the amount of financial need is equal to the cost of attendance, minus the expected family contribution, minus the estimated financial assistance not received under title IV of the HEA. The estimated financial assistance not received under title IV is defined in section 480(j) of the HEA to include "scholarships, grants, loans or other assistance known to the institution at the time the determination of the student's need is made * * *." The Secretary believes that stipends awarded under other programs would be treated as other financial assistance in the calculation of a student's financial need. Similarly, if monies received from teaching assistantships are received as a form of financial assistance, they would be included in calculating a student's financial need as estimated financial assistance not received under title IV of the HEA. Monies received from teaching assistantships that are not treated as a form of financial assistance would be counted as part of a student's adjusted gross income. A student's adjusted gross income is a major component in the calculation of the student's expected family contribution.

Finally, the Secretary does not agree with the suggested changes to § 648.51. Section 945(b) provides that, in the case of stipends that are first received in academic year 1993–94, the amount of the stipend is set at a level equal to NSF fellowships (adjusted as necessary so as not to exceed a fellow's demonstrated level of need). Prior to the reauthorization, the amount of stipends received by fellows equalled $10,000 or the amount of the fellow's financial need, whichever was less. This amount was not changed in the reauthorization. The Secretary believes that since the amount of stipends that were first received prior to academic year 1993–94 was not changed in the reauthorization, fellows who first received stipends prior to this time must continue to receive the amounts provided under the law as it existed prior to the reauthorization.

Changes: None.

Supervised Training of Fellows—(§§ 648.9(b) and 648.61)

Comments: One commenter suggested clarification of § 648.61(a), which provides that the institution shall provide the opportunity for fellows to provide instruction at the graduate or undergraduate level under the guidance and direction of faculty in the academic department. The commenter inquired whether the fellow is required to accept this "opportunity." The commenter also inquired whether this opportunity must coincide with the year in which the fellowship is awarded.

Discussion: Fellows are required to accept the opportunity to provide instruction at the graduate or undergraduate level. The Secretary has

revised the definition of supervised training in § 648.9(b) and § 648.61 to more closely parallel the language of section 944(b)(8) of the statute which clearly indicates that an institution must provide this activity as part of the fellowship.

A fellow must provide instruction at the graduate or undergraduate level within the length of time necessary for the fellow to complete the course of graduate study or five years, whichever is less. The institution need not provide this opportunity within the first year in which the fellowship is awarded.

Changes: The Secretary has revised the definition of supervised training in § 648.9(b) to mean training provided to fellows under the guidance and direction of faculty in the academic department. In addition, the Secretary has revised § 648.61 to provide that the institution shall provide to fellows at least one academic year of supervised training in instruction at the graduate or undergraduate level at the schedule of at least a one-half-time teaching assistant.

Use of the Institutional Payment—(§ 648.62)

Comments: Several commenters suggested that the Secretary permit an academic department to use the institutional payment to pay for a fellow's travel, books, software or other research supplies and equipment. Another commenter suggested that part of the institutional payment should be allowed to be set aside for directors of fellowship programs to advertise, recruit, and provide extra-classroom educational experiences for fellows.

Discussion: The Secretary has revised § 648.62 of the proposed regulations by adding a new § 648.62(b) which provides that, after payment of a fellow's tuition and fees, the institutional payment may be applied against educational expenses of a fellow that are not covered by tuition and fees and are related to the academic program in which the fellow is enrolled. These expenses include the following: (1) Costs for rental or purchase of any books, materials, or supplies required of students in the same course of study; (2) costs of computer hardware, project specific software, and other equipment prorated by the length of the student's fellowship over the reasonable life of the equipment; (3) membership fees of professional associations; (4) travel and per diem to professional association meetings and registration fees; (5) international travel, per diem, and registration fees to participate in educational activities; (6) expenses incurred in research; and (7) costs of reproducing and binding of educational products. Under § 648.62(b), an institution could use the institutional payment to cover a fellow's travel, books, software, or other research supplies, and equipment if these expenses are related to the academic program in which a fellow is enrolled. In addition, part of the institutional payment could be set aside to provide extra-classroom experiences for fellows if these experiences are related to the academic program in which the fellow is enrolled. An institution could not set aside a part of the institutional payment, however, to advertise and recruit for its fellowship program since these would be operational expenses rather than direct fellowship support. The Secretary believes that operational expenses are not sufficiently related to the academic program in which the fellow is enrolled to warrant support. This policy applies to all fellowship programs administered by the Department.

Changes: The Secretary has revised § 648.62 by adding § 648.62(b) which provides that the institutional payment may be applied against expenses that are not covered as tuition and fees and are related to the academic program in which the fellow is enrolled.

Institutional Matching Contribution—(§ 648.63)

Comments: Several commenters suggested that the institutional matching contribution include the institution's payment of tuition and fees. Several commenters also suggested that an institution be allowed to use its institutional matching contribution to supplement a fellow's stipend. These commenters contend that encouraging institutions to supplement a fellow's stipend will encourage participation in the program by making it more competitive with other fellowship programs.

One commenter requested clarification of § 648.63(b), which provides that an institution may not use its institutional matching contribution to fund fellowships that were funded by the institution prior to the award of the grant. This commenter inquired whether fellowships acquired by an institution through competitive processes before the award of the grant must be included in the institutional matching contribution.

Discussion: The Secretary has revised § 648.63(a)(2) to provide that the institutional matching contribution may be used to pay for tuition, fees, and the costs listed in § 648.62(b). The Secretary has also revised § 648.63(a)(4) of the proposed regulations which provided that the institutional matching contribution may be used to supplement the stipend received by a fellow. Many institutions promise students stipends that exceed their financial need as a way of enticing students to enroll at their institution. The Secretary does not believe that the institutional matching contribution should be used for this purpose. The Secretary believes that this program is need-based, and therefore any monies provided to a fellow by an institution as part of its institutional matching contribution may not exceed a fellow's financial need.

An institution may not use its institutional matching contribution, under § 648.63(b) of the regulations, to fund fellowships that were funded by the institution prior to the award of the grant. The Secretary believes that this rule applies regardless of how a particular type of fellowship was obtained by the institution. The Secretary believes that the goal of this program is to fund additional fellowships, not to duplicate already existing fellowships.

Changes: The Secretary has revised § 648.63(a)(2) to provide that the institutional matching contribution may be used to pay for tuition, fees, and the costs listed in § 648.62(b). The Secretary has also revised § 648.63(a)(4) to provide that an institution may supplement the stipend received by a fellow under § 648.51 in an amount not to exceed a fellow's financial need.

Intergovernmental Review

This program is subject to the requirements of Executive Order 12372 and the regulations in 34 CFR part 79. The objective of the Executive order is to foster an intergovernmental partnership and a strengthened federalism by relying on processes developed by State and local governments for coordination and review of proposed Federal financial assistance.

In accordance with the order, this document is intended to provide early notification of the Department's specific plans and actions for this program.

Assessment of Education Impact

In the notice of proposed rulemaking, the Secretary requested comments on whether the proposed regulations would require transmission of information that is being gathered by or is available from any other agency or authority of the United States.

Based on the response to the proposed rules and on its own review, the Department has determined that the regulations in this document do not require transmission of information that is being gathered by or is available from

any other agency or authority of the United States.

List of Subjects in 34 CFR Part 648

College and universities, Grant program-education, Reporting and recordkeeping requirements, Fellowships.

Dated: December 7, 1993.

Richard W. Riley,

Secretary of Education.

(Catalog of Federal Domestic Assistance Number 84.200—Graduate Assistance in Areas of National Need program)

The Secretary amends title 34 of the Code of Federal Regulations by adding a new part 648 to read as follows:

PART 648—GRADUATE ASSISTANCE IN AREAS OF NATIONAL NEED

Subpart A—General

Sec.
648.1 What is the Graduate Assistance in Areas of National Need program?
648.2 Who is eligible for a grant?
648.3 What activities may the Secretary fund?
648.4 What is included in the grant?
648.5 What is the amount of a grant?
648.6 What is the duration of a grant?
648.7 What is the institutional matching contribution?
648.8 What regulations apply?
648.9 What definitions apply?

Subpart B—How Does an Institution of Higher Education Apply for a Grant?

648.20 How does an institution of higher education apply for a grant?

Subpart C—How Does the Secretary Make an Award?

648.30 How does the Secretary evaluate an application?
648.31 What selection criteria does the Secretary use?
648.32 What additional factors does the Secretary consider?
648.33 What priorities and absolute preferences does the Secretary establish?

Subpart D—How Are Fellows Selected?

648.40 How does an academic department select fellows?
648.41 How does an individual apply for a fellowship?

Subpart E—How Does the Secretary Distribute Funds?

648.50 What are the Secretary's payment procedures?
648.51 What is the amount of a stipend?
648.52 What is the amount of the institutional payment?

Subpart F—What Are the Administrative Responsibilities of the Institution?

648.60 When does an academic department make a commitment to a fellow to provide stipend support?
648.61 How must the academic department supervise the training of fellows?
648.62 How can the institutional payment be used?
648.63 How can the institutional matching contribution be used?
648.64 What are unallowable costs?
648.65 How does an institution of higher education disburse and return funds?
648.66 What records and reports are required from the institution?

Subpart G—What Conditions Must Be Met by a Fellow After an Award?

648.70 What conditions must be met by a fellow?

Appendix to Part 648—Academic Areas

Authority: 20 U.S.C. 1134, 1134l–1134q-1, unless otherwise noted.

Subpart A—General

§ 648.1 What is the Graduate Assistance in Areas of National Need program?

The Graduate Assistance in Areas of National Need program provides fellowships through academic departments of institutions of higher education to assist graduate students of superior ability who demonstrate financial need. The purpose of the program is to sustain and enhance the capacity for teaching and research in areas of national need.

(Authority: 20 U.S.C. 1134l–1134n)

§ 648.2 Who is eligible for a grant?

(a) The Secretary awards grants to the following:

(1) Any academic department of an institution of higher education that provides a course of study that—

(i) Leads to a graduate degree in an area of national need; and

(ii) Has been in existence for at least four years at the time of an application for a grant under this part.

(2) An academic department of an institution of higher education that—

(i) Satisfies the requirements of paragraph (a)(1) of this section; and

(ii) Submits a joint application with one or more eligible nondegree-granting institutions that have formal arrangements for the support of doctoral dissertation research with one or more degree-granting institutions.

(b) A formal arrangement under paragraph (a)(2)(ii) of this section is a written agreement between a degree-granting institution and an eligible nondegree-granting institution whereby the degree-granting institution accepts students from the eligible nondegree-granting institution as doctoral degree candidates with the intention of awarding these students doctorates in an area of national need.

(c) The Secretary does not award a grant under this part for study at a school or department of divinity.

(Authority: 20 U.S.C. 1134, 1134m, 1134n)

§ 648.3 What activities may the Secretary fund?

(a) The Secretary awards grants to institutions of higher education to fund fellowships in one or more areas of national need.

(b)(1) For the purposes of this part, the Secretary designates areas of national need from the academic areas listed in the appendix to this part or from the resulting inter-disciplines.

(2) The Secretary announces these areas of national need in a notice published in the **Federal Register**.

(Authority: 20 U.S.C. 1134l–1134n)

§ 648.4 What is included in the grant?

Each grant awarded by the Secretary consists of the following:

(a) The stipends paid by the Secretary through the institution of higher education to fellows. The stipend provides an allowance to a fellow for the fellow's (and his or her dependents') subsistence and other expenses.

(b) The institutional payments paid by the Secretary to the institution of higher education to be applied against each fellow's tuition, fees, and the costs listed in § 648.62(b).

(Authority: 20 U.S.C. 1134p, 1134q)

§ 648.5 What is the amount of a grant?

(a) The amount of a grant to an academic department may not be less than $100,000 and may not be more than $750,000 in a fiscal year.

(b) In any fiscal year, no academic department may receive more than $750,000 as an aggregate total of new and continuing grants.

(Authority: 20 U.S.C. 1134m)

§ 648.6 What is the duration of a grant?

The duration of a grant awarded under this part is a maximum of three annual budget periods during a three-year (36-month) project period.

(Authority: 20 U.S.C. 1134m)

§ 648.7 What is the institutional matching contribution?

An institution shall provide, from non-Federal funds, an institutional matching contribution equal to at least 25 percent of the amount of the grant received under this part, for the uses indicated in § 648.63.

(Authority: 20 U.S.C. 1134o, 1134p)

§ 648.8 What regulations apply?

The following regulations apply to this program:

(a) The Education Department General Administrative Regulations (EDGAR) as follows:

(1) 34 CFR Part 74 (Administration of Grants to Institutions of Higher

Education, Hospitals, and Nonprofit Organizations).

(2) 34 CFR Part 75 (Direct Grant Programs).

(3) 34 CFR Part 77 (Definitions that Apply to Department Regulations).

(4) 34 CFR Part 79 (Intergovernmental Review of Department of Education Programs and Activities).

(5) 34 CFR Part 82 (New Restrictions on Lobbying).

(6) 34 CFR Part 85 (Governmentwide Debarment and Suspension (Nonprocurement) and Governmentwide Requirements for Drug-Free Workplace (Grants)).

(7) 34 CFR Part 86 (Drug-Free Schools and Campuses).

(b) The regulations in this part.

(Authority: 20 U.S.C. 1134l, 1134m)

§ 648.9 What definitions apply?

(a) *Definitions in EDGAR.* The following terms used in this part are defined in 34 CFR 77.1:

Applicant
Application
Award
Budget
Budget period
Department
EDGAR
Equipment
Grant
Nonprofit
Project period
Secretary
Supplies

(b) *Other definitions.* The following definitions also apply to this part:

Academic department means any department, program, unit, or any other administrative subdivision of an institution of higher education that—

(i) Directly administers or supervises post-baccalaureate instruction in a specific discipline; and

(ii) Has the authority to award academic course credit acceptable to meet degree requirements at an institution of higher education.

Academic field means an area of study in an academic department within an institution of higher education other than a school or department of divinity.

Academic year means the 12-month period commencing with the fall instructional term of the institution.

Application period means the period in which the Secretary solicits applications for this program.

Discipline means a branch of instruction or learning.

Eligible non-degree granting institution means any institution that—

(i) Conducts post-baccalaureate academic programs of study but does not award doctoral degrees in an area of national need;

(ii) Is described in section 501(c)(3) of the Internal Revenue Code of 1986 and is exempt from tax under section 501(a) of the Code;

(iii) Is organized and operated substantially to conduct scientific and cultural research and graduate training programs;

(iv) Is not a private foundation;

(v) Has academic personnel for instruction and counseling who meet the standards of the institution of higher education in which the students are enrolled; and

(vi) Has necessary research resources not otherwise readily available in the institutions in which students are enrolled.

Fees mean non-refundable charges paid by a graduate student for services, materials, and supplies that are not included within the tuition charged by the institution in which the student is enrolled.

Fellow means a recipient of a fellowship under this part.

Fellowship means an award made by an institution of higher education to an individual for graduate study under this part at the institution of higher education.

Financial need means the fellow's financial need as determined under title IV, part F, of the HEA for the period of the fellow's enrollment in the approved academic field of study for which the fellowship was awarded.

General operational overhead means non-instructional expenses incurred by an academic department in the normal administration and conduct of its academic program, including the costs of supervision, recruitment, capital outlay, debt service, indirect costs, or any other costs not included in the determination of tuition and non-refundable fee charges.

Graduate student means an individual enrolled in a program of post-baccalaureate study at an institution of higher education.

Graduate study means any program of postbaccalaureate study at an institution of higher education.

HEA means the Higher Education Act of 1965, as amended.

Highest possible degree available means a doctorate in an academic field or a master's degree, professional degree, or other post-baccalaureate degree if a doctorate is not available in that academic field.

Institution of higher education (Institution) means an institution of higher education, other than a school or department of divinity, as defined in section 1201(a) of the HEA.

Inter-discipline means a course of study that involves academic fields in two or more disciplines.

Minority means Alaskan Native, American Indian, Asian-American, Black (African-American), Hispanic American, Native Hawaiian, or Pacific Islander.

Multi-disciplinary application means an application that requests fellowships for more than a single academic department in areas of national need designated as priorities by the Secretary under this part.

Project means the activities necessary to assist, whether from grant funds or institutional resources, fellows in the successful completion of their designated educational programs.

Satisfactory progress means that a fellow meets or exceeds the institution's criteria and standards established for a graduate student's continued status as an applicant for the graduate degree in the academic field for which the fellowship was awarded.

School or department of divinity means an institution, or an academic department of an institution, whose program is specifically for the education of students to prepare them to become ministers of religion or to enter into some other religious vocation or to prepare them to teach theological subjects.

Students from traditionally underrepresented backgrounds mean women and minorities who traditionally are underrepresented in areas of national need as designated by the Secretary.

Supervised training means training provided to fellows under the guidance and direction of faculty in the academic department.

Tuition means the charge for instruction by the institution of higher education in which the fellow is enrolled.

Underrepresented in areas of national need means proportionate representation as measured by degree recipients, that is less than the proportionate representation in the general population, as indicated by—

(i) The most current edition of the Department's *Digest of Educational Statistics;*

(ii) The National Research Council's *Doctorate Recipients from United States Universities;*

(iii) Other standard statistical references, as announced annually in the **Federal Register** notice inviting applications for new awards under this program; or

(iv) As documented by national survey data submitted to and accepted by the Secretary on a case-by-case basis.

(Authority: 20 U.S.C. 1134l–1134q)

Subpart B—How Does an Institution of Higher Education Apply for a Grant?

§ 648.20 How does an institution of higher education apply for a grant?

(a) To apply for a grant under this part, an institution of higher education shall submit an application that responds to the appropriate selection criteria in § 648.31.

(b) In addition, an application for a grant must—

(1) Describe the current academic program for which the grant is sought;

(2) Request a specific number of fellowships to be awarded on a full-time basis for the academic year covered under the grant in each academic field included in the application;

(3) Set forth policies and procedures to ensure that in making fellowship awards under this part the institution will seek talented students from traditionally underrepresented backgrounds;

(4) Set forth policies and procedures to assure that in making fellowship awards under this part the institution will make awards to individuals who satisfy the requirements of § 648.40;

(5) Set forth policies and procedures to ensure that Federal funds made available under this part for any fiscal year will be used to supplement and, to the extent practical, increase the funds that otherwise would be made available for the purposes of this part and, in no case, to supplant those funds;

(6) Provide assurances that the institution will provide the institutional matching contribution described in § 648.7;

(7) Provide assurances that, in the event that funds made available to the academic department under this part are insufficient to provide the assistance due a student under the commitment entered into between the academic department and the student, the academic department will endeavor, from any funds available to it, to fulfill the commitment to the student;

(8) Provide that the institution will comply with the requirements in subpart F; and

(9) Provide assurances that the academic department will provide at least one year of supervised training in instruction to students receiving fellowships under this program.

(c) In any application period, an academic department may not submit more than one application for new awards.

(Approved by the Office of Management and Budget under control number 1840–0604)

(Authority: 20 U.S.C. 1134o)

Subpart C—How Does the Secretary Make an Award?

§ 648.30 How does the Secretary evaluate an application?

(a) The Secretary evaluates an application on the basis of the criteria in § 648.31.

(b) The Secretary awards up to 100 points for these criteria.

(c) The maximum possible score for each criterion is indicated in parentheses.

(Authority: 20 U.S.C. 1134m, 1134o)

§ 648.31 What selection criteria does the Secretary use?

The Secretary uses the following criteria to evaluate an application:

(a) *Meeting the purposes of the program.* (7 points) The Secretary reviews each application to determine how well the project will meet the purposes of the program, including the extent to which—

(1) The applicant's general and specific objectives for the project are realistic and measurable;

(2) The applicant's objectives for the project seek to sustain and enhance the capacity for teaching and research at the institution and at State, regional, or national levels;

(3) The applicant's objectives seek to institute policies and procedures to ensure the enrollment of talented graduate students from traditionally underrepresented backgrounds; and

(4) The applicant's objectives seek to institute policies and procedures to ensure that it will award fellowships to individuals who satisfy the requirements of § 648.40.

(b) *Extent of need for the project.* (5 points) The Secretary considers the extent to which a grant under the program is needed by the academic department by considering—

(1) How the applicant identified the problems that form the specific needs of the project;

(2) The specific problems to be resolved by successful realization of the goals and objectives of the project; and

(3) How increasing the number of fellowships will meet the specific and general objectives of the project.

(c) *Quality of the graduate academic program.* (25 points) The Secretary reviews each application to determine the quality of the current graduate academic program for which project funding is sought, including—

(1) The course offerings and academic requirements for the graduate program;

(2) The qualifications of the faculty, including education, research interest, publications, teaching ability, and accessibility to graduate students;

(3) The focus and capacity for research; and

(4) Any other evidence the applicant deems appropriate to demonstrate the quality of its academic program.

(d) *Quality of the supervised teaching experience.* (5 points) The Secretary reviews each application to determine the quality of the teaching experience the applicant plans to provide fellows under this program, including the extent to which the project—

(1) Provides each fellow with the required supervised training in instruction;

(2) Provides adequate instruction on effective teaching techniques;

(3) Provides extensive supervision of each fellow's teaching performance; and

(4) Provides adequate and appropriate evaluation of the fellow's teaching performance.

(e) *Recruitment plan.* (10 points) The Secretary reviews each application to determine the quality of the applicant's recruitment plan, including—

(1) How the applicant plans to identify, recruit, and retain students from traditionally underrepresented backgrounds in the academic program for which fellowships are sought;

(2) How the applicant plans to identify eligible students for fellowships;

(3) The past success of the academic department in enrolling talented graduate students from traditionally underrepresented backgrounds; and

(4) The past success of the academic department in enrolling talented graduate students for its academic program.

(f) *Project administration.* (7 points) The Secretary reviews the quality of the proposed project administration, including—

(1) How the applicant will select fellows, including how the applicant will ensure that project participants who are otherwise eligible to participate are selected without regard to race, color, national origin, religion, gender, age, or disabling condition;

(2) How the applicant proposes to monitor whether a fellow is making satisfactory progress toward the degree for which the fellowship has been awarded;

(3) How the applicant proposes to identify and meet the academic needs of fellows;

(4) How the applicant proposes to maintain enrollment of graduate students from traditionally underrepresented backgrounds; and

(5) The extent to which the policies and procedures the applicant proposes to institute for administering the project are likely to ensure efficient and

effective project implementation, including assistance to and oversight of the project director.

(g) *Institutional commitment.* (16 points) The Secretary reviews each application for evidence that—

(1) The applicant will provide, from any funds available to it, sufficient funds to support the financial needs of the fellows if the funds made available under the program are insufficient;

(2) The institution's social and academic environment is supportive of the academic success of students from traditionally underrepresented backgrounds on the applicant's campus;

(3) Students receiving fellowships under this program will receive stipend support for the time necessary to complete their courses of study, but in no case longer than 5 years; and

(4) The applicant demonstrates a financial commitment, including the nature and amount of the institutional matching contribution, and other institutional commitments that are likely to ensure the continuation of project activities for a significant period of time following the period in which the project receives Federal financial assistance.

(h) *Quality of key personnel.* (5 points) The Secretary reviews each application to determine the quality of key personnel the applicant plans to use on the project, including—

(1) The qualifications of the project director;

(2) The qualifications of other key personnel to be used in the project;

(3) The time commitment of key personnel, including the project director, to the project; and

(4) How the applicant, as part of its nondiscriminatory employment practices, will ensure that its personnel are selected without regard to race, color, national origin, religion, gender, age, or disabling condition, except pursuant to a lawful affirmative action plan.

(i) *Budget.* (5 points) The Secretary reviews each application to determine the extent to which—

(1) The applicant shows a clear understanding of the acceptable uses of program funds; and

(2) The costs of the project are reasonable in relation to the objectives of the project.

(j) *Evaluation plan.* (10 points) The Secretary reviews each application to determine the quality of the evaluation plan for the project, including the extent to which the applicant's methods of evaluation—

(1) Relate to the specific goals and measurable objectives of the project;

(2) Assess the effect of the project on the students receiving fellowships under this program, including the effect on persons of different racial and ethnic backgrounds, genders, and ages, and on persons with disabilities who are served by the project;

(3) List both process and product evaluation questions for each project activity and outcome, including those of the management plan;

(4) Describe both the process and product evaluation measures for each project activity and outcome;

(5) Describe the data collection procedures, instruments, and schedules for effective data collection;

(6) Describe how the applicant will analyze and report the data so that it can make adjustments and improvements on a regular basis; and

(7) Include a time-line chart that relates key evaluation processes and benchmarks to other project component processes and benchmarks.

(k) *Adequacy of resources.* (5 points) The Secretary reviews each application to determine the adequacy of the resources that the applicant makes available to graduate students receiving fellowships under this program, including facilities, equipment, and supplies.

(Approved by the Office of Management and Budget under control number 1840–0604)

(Authority: 20 U.S.C. 1134m–1134p)

§ 648.32 What additional factors does the Secretary consider?

(a) *Continuation awards.* (1) Before funding new applications, the Secretary gives preference to grantees requesting their second or third year of funding.

(2) If appropriations for this program are insufficient to fund all continuation grantees for the second and third years at the approved funding level, the Secretary prorates the available funds, if any, among the continuation grantees and, if necessary, awards continuation grants of less than $100,000.

(b) *Equitable distribution.* In awarding grants, the Secretary will, consistent with an allocation of awards based on the quality of competing applications, ensure the following:

(1) An equitable geographic distribution of grants to eligible applicant institutions of higher education.

(2) An equitable distribution of grants to eligible applicant public and eligible applicant private institutions of higher education.

(Authority: 20 U.S.C. 1134m–1134p)

§ 648.33 What priorities and absolute preferences does the Secretary establish?

(a) For each application period, the Secretary establishes as an area of national need and gives absolute preference to one or more of the general disciplines and sub-disciplines listed as priorities in the appendix to this part or the resulting interdisciplines.

(b) The Secretary announces the absolute preferences in a notice published in the **Federal Register**.

(Authority: 20 U.S.C. 1134l–1134n)

Subpart D—How Are Fellows Selected?

§ 648.40 How does an academic department select fellows?

(a) In selecting individuals to receive fellowships, an academic department shall consider only individuals who—

(1) Are currently enrolled as graduate students, have been accepted at the grantee institution, or are enrolled or accepted as graduate students at an eligible nondegree-granting institution;

(2) Are of superior ability;

(3) Have an excellent academic record;

(4) Have financial need;

(5) Are planning to pursue the highest possible degree available in their course of study;

(6) Are planning a career in teaching or research;

(7)Are not ineligible to receive assistance under 34 CFR 75.60; and

(8)(i) Are United States citizens or nationals;

(ii) Are permanent residents of the United States;

(iii) Are in the United States for other than a temporary purpose and intend to become permanent residents; or

(iv) Are permanent residents of the Trust Territory of the Pacific Islands.

(b) An individual who satisfies the eligibility criteria in paragraph (a) of this section, but who attends an institution that does not offer the highest possible degree available in the individual's course of study, is eligible for a fellowship if the individual plans to attend subsequently an institution that offers this degree.

(Authority: 20 U.S.C. 1134l, 1134m, 1134o)

§ 648.41 How does an individual apply for a fellowship?

An individual shall apply directly to an academic department of an institution of higher education that has received a grant.

(Authority: 20 U.S.C. 1134l, 1134p)

Subpart E—How Does the Secretary Distribute Funds?

§ 648.50 What are the Secretary's payment procedures?

(a) The Secretary awards to the institution of higher education a stipend and an institutional payment for each

individual awarded a fellowship under this part.

(b) If an academic department of an institution of higher education is unable to use all of the amounts available to it under this part, the Secretary reallots the amounts not used to academic departments of other institutions of higher education for use in the academic year following the date of the reallotment.

(Authority: 20 U.S.C. 1134n, 1134p, 1134q)

§ 648.51 What is the amount of a stipend?

(a) For a fellowship initially awarded for an academic year prior to the academic year 1993–94, the institution shall pay the fellow a stipend in an amount that equals the fellow's financial need or $10,000, whichever is less.

(b) For a fellowship initially awarded for the academic year 1993–94, or any succeeding academic year, the institution shall pay the fellow a stipend at a level of support equal to that provided by the National Science Foundation graduate fellowships, except that this amount must be adjusted as necessary so as not to exceed the fellow's demonstrated level of financial need. The Secretary announces the amount of the stipend in a notice published in the Federal Register.

(Authority: 20 U.S.C. 1134p)

§ 648.52 What is the amount of the institutional payment?

For academic year 1993–1994, the amount of the institutional payment received by an institution of higher education for each student awarded a fellowship at the institution is $9,000. Thereafter, the Secretary adjusts the amount of the institutional payment annually in accordance with inflation as determined by the United States Department of Labor's Consumer Price Index for the previous calendar year. The Secretary announces the amount of the institutional payment in a notice published in the Federal Register.

(Authority: 20 U.S.C. 1134q)

Subpart F—What Are the Administrative Responsibilities of the Institution?

§ 648.60 When does an academic department make a commitment to a fellow to provide stipend support?

(a) An academic department makes a commitment to a fellow at any point in his or her graduate study for the length of time necessary for the fellow to complete the course of graduate study, but in no case longer than five years.

(b) An academic department shall not make a commitment under paragraph (a) of this section to provide stipend support unless the academic department has determined that adequate funds are available to fulfill the commitment either from funds received or anticipated under this part or from institutional funds.

(Authority: U.S.C. 1134p)

§ 648.61 How must the academic department supervise the training of fellows?

The institution shall provide to fellows at least one academic year of supervised training in instruction at the graduate or undergraduate level at the schedule of at least one-half-time teaching assistant.

(Authority: 20 U.S.C. 1134o)

§ 648.62 How can the institutional payment be used?

(a) The institutional payment must be first applied against a fellow's tuition and fees.

(b) After payment of a fellow's tuition and fees, the institutional payment may be applied against educational expenses of the fellow that are not covered by tuition and fees and are related to the academic program in which the fellow is enrolled. These expenses include the following:

(1) Costs for rental or purchase of any books, materials, or supplies required of students in the same course of study.

(2) Costs of computer hardware, project specific software, and other equipment prorated by the length of the student's fellowship over the reasonable life of the equipment.

(3) Membership fees of professional associations.

(4) Travel and per diem to professional association meetings and registration fees.

(5) International travel, per diem, and registration fees to participate in educational activities.

(6) Expenses incurred in research.

(7) Costs of reproducing and binding of educational products.

(c) The institutional payment must supplement and, to the extent practical, increase the funds that would otherwise be made available for the purpose of the program and, in no case, to supplant institutional funds currently available for fellowships.

(Authority: 20 U.S.C. 1134o–1134q)

§ 648.63 How can the institutional matching contribution be used?

(a) The institutional matching contribution may be used to—

(1) Provide additional fellowships to graduate students who are not already receiving fellowships under this part and who satisfy the requirements of § 648.40;

(2) Pay for tuition, fees, and the costs listed in § 648.62(b);

(3) Pay for costs of providing a fellow's instruction that are not included in the tuition or fees paid to the institution in which the fellow is enrolled; and

(4) Supplement the stipend received by a fellow under § 648.51 in an amount not to exceed a fellow's financial need.

(b) An institution may not use its institutional matching contribution to fund fellowships that were funded by the institution prior to the award of the grant.

(Authority: 20 U.S.C. 1134l, 1134o, 1134p)

§ 648.64 What are unallowable costs?

Neither grant funds nor the institutional matching funds may be used to pay for general operational overhead costs of the academic department.

(Authority: 20 U.S.C. 1134m, 1134q)

§ 648.65 How does the institution of higher education disburse and return funds?

(a) An institution that receives a grant shall disburse a stipend to a fellow in accordance with its regular payment schedule, but shall not make less than one payment per academic term.

(b) If a fellow withdraws from an institution before completion of an academic term, the institution may award the fellowship to another individual who satisfies the requirements in § 648.40.

(c) If a fellowship is vacated or discontinued for any period of time, the institution shall return a prorated portion of the institutional payment and unexpended stipend funds to the Secretary, unless the Secretary authorizes the use of those funds for a subsequent project period. The institution shall return the prorated portion of the institutional payment and unexpended stipend funds at a time and in a manner determined by the Secretary.

(d) If a fellow withdraws from an institution before the completion of the academic term for which he or she received a stipend installment, the fellow shall return a prorated portion of the stipend installment to the institution at a time and in a manner determined by the Secretary.

(Authority: 20 U.S.C. 1134p, 1134q)

§ 648.66 What records and reports are required from the institution?

(a) An institution of higher education that receives a grant shall provide to the Secretary, prior to the receipt of grant

funds for disbursement to a fellow, a certification that the fellow is enrolled in, is making satisfactory progress in, and is devoting essentially full time to study in the academic field for which the grant was made.

(b) An institution of higher education that receives a grant shall keep records necessary to establish—

(1) That each student receiving a fellowship satisfies the eligibility requirements in § 648.40;

(2) The time and amount of all disbursements and return of stipend payments;

(3) The appropriate use of the institutional payment; and

(4) That assurances, policies, and procedures provided in its application have been satisfied.

(Approved by the Office of Management and Budget under control number 1840–0604)

(Authority: 20 U.S.C. 1134m–1134q)

Subpart G—What Conditions Must Be Met by a Fellow After an Award?

§ 648.70 What conditions must be met by a fellow?

To continue to be eligible for a fellowship, a fellow must—

(a) Maintain satisfactory progress in the program for which the fellowship was awarded;

(b) Devote essentially full time to study or research in the academic field in which the fellowship was awarded; and

(c) Not engage in gainful employment, except on a part-time basis in teaching, research, or similar activities determined by the academic department to be in support of the fellow's progress toward a degree.

(Authority: 20 U.S.C. 1134p)

Appendix to Part 648—Academic Areas

The Secretary may give an absolute preference to any of the academic areas listed as disciplines or subdisciplines below, or the resulting inter-disciplines. The list was derived from the Classification of Instructional Programs (CIP) developed by the Office of Educational Research and Improvement of the U.S. Department of Education and includes the instructional programs that may constitute courses of studies toward graduate degrees. The code number to the left of each discipline and subdiscipline is the Department's identification code for that particular type of instructional program.

05. Area, Ethnic, and Cultural Studies
05.01 Area Studies
05.02 Ethnic and Cultural Studies
11. Computer and Information Sciences
11.01 Computer and Information Sciences, General
11.02 Computer Programming
11.04 Information Sciences and Systems
11.05 Computer Systems Analysis
11.07 Computer Science
13. Education
13.01 Education, General
13.02 Bilingual/Bicultural Education
13.03 Curriculum and Instruction
13.04 Education Administration and Supervision
13.05 Educational/Instructional Media Design
13.06 Educational Evaluation, Research, and Statistics
13.07 International and Comparative Education
13.08 Educational Psychology
13.09 Social and Philosophical Foundations of Education
13.10 Special Education
13.11 Student Counseling and Personnel Services
13.12 General Teacher Education
13.13 Teacher Education, Specific Academic, and Vocational Programs
13.14 Teaching English as a Second Language/Foreign Language
14. Engineering
14.01 Engineering, General
14.02 Aerospace, Aeronautical, and Astronautical Engineering
14.03 Agricultural Engineering
14.04 Architectural Engineering
14.05 Bioengineering and Biomedical Engineering
14.06 Ceramic Sciences and Engineering
14.07 Chemical Engineering
14.08 Civil Engineering
14.09 Computer Engineering
14.10 Electrical, Electronic, and Communications Engineering
14.11 Engineering Mechanics
14.12 Engineering Physics
14.13 Engineering Science
14.14 Environmental/Environmental Health Engineering
14.15 Geological Engineering
14.16 Geophysical Engineering
14.17 Industrial/Manufacturing Engineering
14.18 Materials Engineering
14.19 Mechanical Engineering
14.20 Metallurgical Engineering
14.21 Mining and Mineral Engineering
14.22 Naval Architecture and Marine Engineering
14.23 Nuclear Engineering
14.24 Ocean Engineering
14.25 Petroleum Engineering
14.27 Systems Engineering
14.28 Textile Sciences and Engineering
14.29 Engineering Design
14.30 Engineering/Industrial Management
14.31 Materials Science
14.32 Polymer/Plastics Engineering
16. Foreign Languages
16.01 Foreign Languages and Literatures
16.03 East and Southeast Asian Languages and Literatures
16.04 East European Languages and Literatures
16.05 Germanic Languages and Literatures
16.06 Greek Languages and Literatures
16.07 South Asian Languages and Literatures
16.09 Romance Languages and Literatures
16.11 Middle Eastern Languages and Literatures
16.12 Classical and Ancient Near Eastern Languages and Literatures
22. Law and Legal Studies
22.01 Law and Legal Studies
25. Library Science
25.01 Library Science/Librarianship
25.03 Library Assistant
26. Biological Sciences/Life Sciences
26.01 Biology, General
26.02 Biochemistry and Biophysics
26.03 Botany
26.04 Cell and Molecular Biology
26.05 Microbiology/Bacteriology
26.06 Miscellaneous Biological Specializations
26.07 Zoology
27. Mathematics
27.01 Mathematics,
27.03 Applied Mathematics
27.05 Mathematic Statistics
40. Physical Sciences
40.01 Physical Sciences, General
40.02 Astronomy
40.03 Astrophysics
40.04 Atmospheric Sciences and Meteorology
40.05 Chemistry
40.06 Geological and Related Sciences
40.07 Miscellaneous Physical Sciences
40.08 Physics
42. Psychology
42.01 Psychology
42.02 Clinical Psychology
42.03 Cognitive Psychology and Psycholinguistics
42.04 Community Psychology
42.06 Counseling Psychology
42.07 Developmental and Child Psychology
42.08 Experimental Psychology
42.09 Industrial and Organizational Psychology
42.11 Physiological Psychology/Psychobiology
42.16 Social Psychology
42.17 School Psychology
50. Visual and Performing Arts
50.01 Visual and Performing Arts
50.02 Crafts, Folk Art, and Artisanry
50.03 Dance
50.04 Design and Applied Arts
50.05 Dramatic/Theater Arts and Stagecraft
50.06 Film/Video and Photographic Arts
50.07 Fine Arts and Art Studies
50.09 Music
51. Health Professions and Related Sciences
51.01 Chiropractic (D.C., D.C.M.)
51.02 Communication Disorders Sciences and Services
51.03 Community Health Services
51.04 Dentistry (D.D.S., D.M.D.)
51.05 Dental Clinical Sciences/Graduate Dentistry (M.S., Ph.D.)
51.06 Dental Services
51.07 Health and Medical Administrative Services
51.08 Health and Medical Assistants
51.09 Health and Medical Diagnostic and Treatment Services
51.10 Health and Medical Laboratory Technologies/Technicians
51.11 Health and Medical Preparatory Programs
51.12 Medicine (M.D.)
51.13 Medical Basic Science
51.14 Medical Clinical Services (M.S., Ph.D)

51.15 Mental Health Services
51.16 Nursing
51.17 Optometry (O.D.)
51.18 Ophthalmic/Optometric Services
51.19 Osteopathic Medicine (D.O.)
51.20 Pharmacy
51.21 Podiatry (D.P.M., D.P., Pod.D.)
51.22 Public Health
51.23 Rehabilitation/Therapeutic Services
51.24 Veterinary Medicine (D.V.M.)
51.25 Veterinary Clinical Services
51.27 Miscellaneous Health Professions

[FR Doc. 93-30615 Filed 12-15-93; 8:45 am]
BILLING CODE 4000-01-P

federal register

Thursday
December 16, 1993

Part IX

Department of Justice

Bureau of Prisons

28 CFR Part 544

Control, Custody, Care, Treatment and Instruction of Inmates; Inmate Recreation Programs; Final Rules

DEPARTMENT OF JUSTICE

Bureau of Prisons

28 CFR Part 544

Control, Custody, Care, Treatment and Instruction of Inmates; Inmate Recreation Programs

AGENCY: Bureau of Prisons, Justice.

ACTION: Final rule.

SUMMARY: In this document the Bureau of Prisons is amending its rule on Inmate Recreation Programs. This amendment broadens the scope of the programs offered to inmates and establishes the overall wellness needs of the inmate as a program goal. This amendment also clarifies existing provisions relating to the disposition of completed hobbycraft items and utilization of hobbycraft facilities. This amendment is intended to increase constructive opportunities for inmates, and reduce personal stress and institution tension.

EFFECTIVE DATE: December 16, 1993.

ADDRESSES: Office of General Counsel, Bureau of Prisons, Room 754, 320 First Street NW., Washington, DC 20534.

FOR FURTHER INFORMATION CONTACT: Roy Nanovic, Office of General Counsel, Bureau of Prisons, phone (202) 514–6655.

SUPPLEMENTARY INFORMATION: The Bureau of Prisons is amending its rule on Inmate Recreation Programs. A final rule on this subject was published in the **Federal Register** on September 12, 1986 (51 FR 32602). A summary of the changes in this amendment follows.

In § 544.30, the list of recreation programs offered by the Bureau is broadened by the addition of "games" and reference is made to wellness activities.

In § 544.31(a), the definition of "Leisure activities" is amended to include "games", and to include religious activities, psychological services and education classes when they are used specifically to encourage knowledge, skills and attitudes related to leisure activity involvement. In paragraph (b), the phrase "* * * and occur at a scheduled time and place" is added to clarify the definition of "Organized activities". In paragraph (d), "ceramics" is added to the definition of "Hobbycraft activities". A new paragraph (e) is added containing a definition of "Inmate wellness program activities."

In § 544.32, the list of goals is amended to include overall wellness needs of inmates. The phrase "and desire" is removed in conformance with revisions to § 544.81 published elsewhere in today's **Federal Register**.

Section 544.33 is revised to designate the Supervisor of Education as being responsible for ensuring that X-rated movies are not shown when an institution has a program to show movies and to remove limitations on regular movie rentals.

Section 544.34 is redesignated and revised as § 544.35, and a new § 544.34 is added to allow for inmate running events.

In new § 544.35(b) the word "completed" is added to show when the marking of art or hobbycraft items must be provided. Revised paragraph (c)(1) is clarified to indicate the quantity of items that may be given to authorized visitors is to be determined by the Warden. This provision, which is intended to ensure orderly operations in the visiting room, was already in the Bureau's implementing guidelines, and consequently represents no change in procedures. Paragraph (d)(1) is clarified by specifying the Warden may restrict for reasons of security and housekeeping the size and quantity of all products made in the art and hobbycraft program. Existing regulations on Inmate Personal Property contain limitations on storage space (see 28 CFR 553.11). As revised, paragraph (d)(1) recognizes that approved storage space for inmate personal property effectively limits the size of an individual hobbycraft item or the size of an accumulation of hobbycraft items. In paragraph (d)(2) the word "items" is added to clearly define the intent of this section. Paragraph (d)(4) is amended to indicate that appropriate hobbycraft activities shall be encouraged in inmate living areas, and that completed hobbycraft items must be removed from the living area when completed unless they are approved as personal property. Paragraph (d)(6) is amended to indicate that rotation of hobbycraft participants to allow for maximum utilization of resources is another way the Warden may set limits on the amount of time an inmate may use a hobbycraft facility. Paragraph (d)(7) is added to indicate that disciplinary action may be taken against inmates found with unauthorized hobbycraft materials in their possession. This action may include removal of the inmate from the hobbycraft program. It is the Bureau's longstanding policy that inmates possessing unauthorized material are subject to disciplinary action (see 28 CFR 541.13 and 553.13). This amendment merely reiterates existing Bureau policy.

Because these amendments merely clarify existing policy or are less restrictive in nature, the Bureau finds good cause for exempting the provisions of the Administrative Procedure Act (5 U.S.C. 553) requiring notice of proposed rulemaking, the opportunity for public comment, and delay in effective date. Members of the public may submit comments concerning this rule by writing the previously cited address. These comments will be considered but will receive no response in the **Federal Register**.

The Bureau of Prisons has determined that this rule is not a significant regulatory action for the purpose of E.O. 12866. After review of the law and regulations, the Director, Bureau of Prisons has certified that this rule, for the purpose of the Regulatory Flexibility Act (Pub. L. 96–354), does not have a significant impact on a substantial number of small entities.

List of Subjects in 28 CFR Part 544

Prisoners.

Kathleen M. Hawk,

Director, Bureau of Prisons.

Accordingly, pursuant to the rulemaking authority vested in the Attorney General in 5 U.S.C. 552(a) and delegated to the Director, Bureau of Prisons in 28 CFR 0.96(p), subchapter C of 28 CFR chapter V is amended as set forth below.

SUBCHAPTER C—INSTITUTIONAL MANAGEMENT

PART 544—EDUCATION

1. The authority citation for 28 CFR part 544 is revised to read as follows:

Authority: 5 U.S.C. 301; 18 U.S.C. 3621, 3622, 3624, 4001, 4042, 4081, 4082 (Repealed in part as to offenses committed on or after November 1, 1987), 5006–5024 (Repealed October 12, 1984 as to offenses committed after that date), 5039; 28 U.S.C. 509, 510; 28 CFR 0.95–0.99.

2. Subpart D, consisting of §§ 544.30 through 544.34, is revised to consist of §§ 544.30 through 544.35 as follows:

Subpart D—Inmate Recreation Programs

Sec.
544.30 Purpose and scope.
544.31 Definitions.
544.32 Goals.
544.33 Movies.
544.34 Inmate running events.
544.35 Art and hobbycraft.

Subpart D—Inmate Recreation Programs

§ 544.30 Purpose and scope.

The Bureau of Prisons encourages inmates to make constructive use of leisure time and offers movies, games, sports, social activities, arts and

hobbycrafts, wellness and other group and individual activities.

§ 544.31 Definitions.

(a) *Leisure activities* are a wide range of activities in which inmates may participate when not performing assigned duties. Leisure activities include participation in organized and informal games, sports, physical fitness, table games, hobbycrafts, music programs, intramural activities, social and cultural organizations, movies, and stage shows. Religious activities, psychological services, and education classes are not included within this definition, except when they are used specifically to encourage knowledge, skills, and attitudes related to leisure activity involvement.

(b) *Organized activities* are those activities accounted for by registration or roster of individual participants, and occur at a scheduled time and place.

(c) *Art work* includes all paintings and sketches rendered in any of the usual media (oils, pastels, crayons, pencils, inks, and charcoal).

(d) *Hobbycraft activities* include ceramics, leatherwork, models, clay, mosaics, crochet, knitting, sculptures, woodworking, lapidary, and other forms consistent with institution guidelines.

(e) *Inmate wellness program activities* include screening, assessments, goal setting, fitness/nutrition prescriptions and counseling.

§ 544.32 Goals.

The Warden is to ensure, to the extent possible, that leisure activities are provided to meet social, physical, psychological, and overall wellness needs of inmates.

(a) Leisure activities are designed to attract inmate participation regardless of ethnic, racial, age, or sex difference, or handicap considerations, and to enhance the potential for post-release involvement.

(b) Leisure activities are designed to ensure that an inmate with the need has the opportunity to complete one or more activities (see 28 CFR 544.81).

§ 544.33 Movies.

If there is a program to show movies, the Supervisor of Education shall ensure that X-rated movies are not shown.

§ 544.34 Inmate running events.

Running events will ordinarily not exceed 10 kilometers or 6.2 miles. Appropriate medical staff and fluid supplies (e.g., water) should be available for all inmate running events.

§ 544.35 Art and hobbycraft.

(a) An inmate engaged in art or hobbycraft activities may obtain materials through:

(1) The institution art program (if one exists);

(2) The commissary sales unit;

(3) Special purchase commissary orders, if the sales unit is unable to stock a sufficient amount of the needed materials; or

(4) Other sources approved by the Warden.

(b) Each inmate shall identify completed art or hobbycraft products by showing the inmate's name and register number on the reverse side of the item.

(c) Completed or abandoned art or hobbycraft articles must be disposed of in one of the following ways:

(1) Upon approval of the Warden, by giving the item to an authorized visitor. The quantity of items will be determined by the Warden.

(2) By mailing the item to a verified relative or approved visitor at the inmate's expense.

(3) By selling, through an institution art and hobbycraft sales program, if one exists, after the institution price committee has determined the sale price.

(4) Other methods established by the Warden.

(d) Restrictions: Art and hobbycraft programs are intended for the personal enjoyment of an inmate and as an opportunity to learn a new leisure skill. They are not for the mass production of art and hobbycraft items by artists or to provide a means of supplementing an inmate's income.

(1) The Warden may restrict, for reasons of security and housekeeping, the size and quantity of all products made in the art and hobbycraft program. Paintings mailed out of the institution must conform to both institution guidelines and postal regulations. If an inmate's art work or hobbycraft is on public display, the Warden may restrict the content of the work in accordance with community standards of decency.

(2) The Warden may set limits, in compliance with commissary guidelines, on the amount of money an inmate may spend on art or hobbycraft items or materials.

(3) The Warden may restrict for reasons of security, fire safety, and housekeeping, the use or possession of art and hobbycraft items or materials.

(4) Appropriate hobbycraft activities shall be encouraged in the inmate living areas. However, the Warden may limit hobbycraft projects in the cell/living areas to those which can be contained/stored in provided personal property containers. Exceptions may be made for such items as a painting where the size would prohibit placement in a locker. Hobbycraft items must be removed from the living area when completed unless they are approved as personal property.

(5) The Warden shall require the inmate to mail completed hobbycraft articles out of the institution at the inmate's expense, or to give them to an authorized visitor within 30 days of completion, or to dispose of them through approved sales. However, articles offered for sale must be sold within 90 days of completion, or must be given to an authorized visitor or mailed out of the institution at the inmate's expense.

(6) Where space and equipment are limited and demand is high, the Warden may set limits on the amount of time an inmate may use a hobbycraft facility, e.g., the Warden may limit an inmate's use of any workshop or classroom to six months to make room for new students. Hobbycraft participants may be rotated to allow for maximum utilization of the resources.

(7) Disciplinary action may be taken against inmates found with unauthorized hobbycraft materials in their possession. This action may include the removal of the inmate from the hobbycraft program.

[FR Doc. 93-30711 Filed 12-15-93; 8:45 am]
BILLING CODE 4410-05-P

---

28 CFR Part 544

Control, Custody, Care, Treatment and Instruction of Inmates; Education, Training and Leisure-Time Program Standards

AGENCY: Bureau of Prisons, Justice.

ACTION: Final rule.

SUMMARY: In this document the Bureau of Prisons is amending its regulations on Education, Training and Leisure-Time Program Standards. This amendment makes changes to the development, delivery and documentation of this program. This amendment also consolidates regulations on Social Education Guidelines and Education Program Certificates into the revised final rule on Education, Training and Leisure-Time Program Standards. The purpose of this amendment is to improve the efficient operation of the Bureau's education and recreation programs.

EFFECTIVE DATE: December 16, 1993.

ADDRESSES: Office of General Counsel, Bureau of Prisons, room 754, 320 First Street NW., Washington, DC 20534.

FOR FURTHER INFORMATION CONTACT: Roy Nanovic, Office of General Counsel,

Bureau of Prisons, phone (202) 514-6655.

SUPPLEMENTARY INFORMATION: The Bureau of Prisons is amending its regulations on Education, Training and Leisure-Time Program Standards. This amendment consolidates the existing provisions for Social Education Guidelines and Education Program Certificates into the Education, Training and Leisure-Time Program Standards. This amendment makes changes in the development, delivery and documentation of the program. These changes broaden program opportunities for inmates. Because the changes in this amendment are less restrictive in nature, the Bureau of Prisons finds good cause under 5 U.S.C. 553(b) to publish the amendment without going through proposed rulemaking, opportunity for public comment, and delay in effective date. Members of the public may submit comments concerning the changes in the final rule by writing the previously cited address. These comments will be considered but will receive no response in the **Federal Register**. The most important of the changes are described below.

Subpart G, Education Program Certificates, which consists of §§ 544.60 and 544.61, is being consolidated into the revised subpart I, Education, Training and Leisure-Time Program Standards. The provisions in § 544.60 are removed because new § 544.82(a)(5) designates the Supervisor of Education as the person responsible for establishing other requirements necessary for achieving program goals. Such requirements would include the issuance of certificates. The provisions in § 544.61 on procedures for issuing certificates are incorporated into § 544.82(b) with some minor changes in wording; the intent remains unchanged.

Revised subpart I consists of §§ 544.80 through 544.83. Revised § 544.80 now makes it clear that inmates are afforded the opportunity to improve their knowledge and skills through the academic, occupation and leisure-time activities outlined in this rule. Independent camps are no longer specifically excepted from the requirement to provide a full range of these activities. Community Treatment Centers are removed from the revised rule because they are no longer directly operated by the Bureau of Prisons.

In § 544.81, the phrase "during confinement" is removed and the phrase "and sufficient time to serve" is added to clarify that the opportunity to complete a program is dependent, in part, upon the amount of time left in an inmate's sentence. The phrase "and desire" is removed to clarify that, in some instances (e.g., the Adult Literacy program), inmate participation may be mandatory. Because an inmate's participation in a non-mandatory program is voluntary, we believe that this is a sufficient guaranty of the inmate's desire, and the Bureau therefore finds it unnecessary to retain the phrase. The program goals are broadened to include English-as-a-Second Language, fitness, wellness or sport activities, Pre-Release programs, and Career Counseling. Reference to the Adult Basic Education (ABE) program has been removed as this is covered in new § 544.81(a) by the Adult Literacy program, in conformance with the revised provisions of the Bureau's Literacy Program (28 CFR part 544, subpart H). Reference to Social Education activities has been removed as these activities are now being offered through other programs (for example, Adult Continuing Education activities) described in paragraph (e). Paragraph (b) of former § 544.81 which placed emphasis on specific inmate needs is removed because these needs are encompassed within the language of new § 544.81. The word "participate" is used instead of the word "complete" in new § 544.81 when the activities described in that section may be of a nature which do not require completion.

Section 544.82 on general program characteristics is revised. Paragraph (a) introductory text of that section now designates the Supervisor of Education as the person responsible for meeting minimum criteria for any education program, thus making former paragraph (a)(3) unnecessary. Paragraph (a)(1) elaborates on the provisions of former § 544.82(a)(1). Paragraph (a)(2) clarifies the provisions of former § 544.82(a)(2) by specifying clear criteria be established on minimum expectations for program completion, as well as provisions for the assessment of student progress. Former paragraph (a)(4) is reworded and becomes new final paragraph (a)(3). Paragraph (a)(4) is a new provision encouraging Supervisors to provide programs with open enrollment policies for students. Paragraph (a)(5) is another new provision which allows the Supervisor of Education to establish other requirements to assure that program goals are achieved. Paragraph (b) of § 544.82 establishes the system for issuing certificates and generally incorporates provisions from former § 544.61. This paragraph allows staff the discretion to issue and/or review certificates of completion; the word "may" is used instead of the word "shall" because some activities may be of a nature that they do not require a certificate.

New § 544.83 specifies that institutions may establish an inmate tutor/aide program and requires the development of guidelines regarding the training and supervision of inmate tutors/aides.

Subpart J, Social Education Guidelines, which consists of §§ 544.90 and 544.91, is also being consolidated into the revised subpart I. The provisions formerly in §§ 544.90 and 544.91 are covered in revised §§ 544.80 through 544.82 and in the implementing language; consequently, it is not necessary to state them separately.

The Bureau of Prisons has determined that this rule is not a significant regulatory action for the purpose of E.O. 12866. After review of the law and regulations, the Director, Bureau of Prisons, has certified that this rule, for the purpose of the Regulatory Flexibility Act (Pub. L. 96-354), does not have a significant impact on a substantial number of small entities.

List of Subjects in 28 CFR Part 544

Prisoners.

Kathleen M. Hawk,
Director, Bureau of Prisons.

Accordingly, pursuant to the rulemaking authority vested in the Attorney General in 5 U.S.C. 552(a) and delegated to the Director, Bureau of Prisons in 28 CFR 0.96(p), subchapter C of 28 CFR Chapter V is amended as set forth below.

SUBCHAPTER C—INSTITUTIONAL MANAGEMENT

PART 544—EDUCATION

1. The authority citation for 28 CFR part 544 is revised to read as follows:

Authority: 5 U.S.C. 301; 18 U.S.C. 3621, 3622, 3624, 4001, 4042, 4081, 4082 (Repealed in part as to offenses committed on or after November 1, 1987), 5006-5024 (Repealed October 12, 1984 as to offenses committed after that date), 5039; 28 U.S.C. 509, 510; 28 CFR 0.95-0.99.

Subpart G—[Removed and Reserved]

2. In part 544, subpart G, consisting of §§ 544.60 and 544.61, is removed and reserved.

Subpart I—[Revised]

3. In part 544, subpart I, formerly consisting of §§ 544.80 through 544.82, is revised to consist of §§ 544.80 through 544.83 and reads as follows:

Subpart I—Education, Training and Leisure-Time Program Standards

Sec.
544.80 Purpose and scope.
544.81 Program goals.

Sec.
544.82 General program characteristics.
544.83 Inmate tutors.

Subpart I—Education, Training and Leisure-Time Program Standards

§ 544.80 Purpose and scope.

In consideration of inmate education, occupation, and leisure-time needs, the Bureau of Prisons affords inmates the opportunity to improve their knowledge and skills through academic, occupation and leisure-time activities. All institutions, except satellite camps, detention centers and metropolitan correctional centers, shall operate a full range of activities as outlined in this rule.

§ 544.81 Program goals.

The Warden shall ensure that an inmate with the need, capacity, and sufficient time to serve, has the opportunity to:

(a) Complete an Adult Literacy program leading to a General Educational Development (GED) certificate and/or high school diploma;

(b) Complete one or more levels of English-as-a-Second Language;

(c) Acquire or improve marketable skill through one or more programs of Occupation Education (OE);

(d) Complete one or more Postsecondary Education activities;

(e) Complete one or more Adult Continuing Education activities;

(f) Participate in one or more leisure, fitness, wellness or sport activities;

(g) Participate in a Pre-Release program; and,

(h) Participate in Career Counseling. Staff shall encourage each inmate to accept the responsibility to identify any specific education needs, set personal goals, and select activities, programs and/or work experiences which will help to reach those goals.

§ 544.82 General program characteristics.

(a) The Supervisor of Education shall assure that the following minimum criteria are met for the institution's education program set forth in § 544.81.

(1) There is a written curriculum which establishes measurable behavioral objectives and procedures.

(2) There are clear criteria which establish minimum expectations for program completion, as well as provisions for the assessment of student progress.

(3) There are provisions for periodic review of the relevancy and effectiveness of the program.

(4) Unless unusual circumstances (e.g., college credit courses) exist, all programs should allow for open entry and exit, at least on a monthly basis.

(5) The Supervisor of Education may establish other requirements necessary to assure that the stated goals of the program are achieved.

(b) Upon an inmate's completion of a program specified in § 544.81, staff may issue and/or review and file a certificate when it contributes to an inmate's future plans in such a way that it validates the inmate's education and training; supports the inmate's chances of securing employment; improves the inmate's acceptance for advanced education; or enhances the inmate's opportunity for success in any other activity the inmate chooses to pursue. The certificate will confirm that the inmate has completed the requirements to receive a certificate that fits one or a combination of the following categories:

(1) Accredited certificates—high school diplomas and occupation training certificates approved or issued through local school districts, state departments of education, or other recognized accrediting educational organizations;

(2) Postsecondary certificates and transcripts—postsecondary degrees or course certificates approved or issued through a sponsoring accredited educational institution;

(3) General Educational Development tests—programs sponsored by the American Council on Education;

(4) Private certificates—outside agencies, private business and industry, other than those stated in paragraph (b)(1) of this section;

(5) Institutional certificates—approved general education, occupation training, recreation, adult continuing education and social education certificates, issued to an inmate who completes a program, and when the institution cannot provide a certificate as provided in paragraphs (b) (1) and (4) of this section; or

(6) Transcripts—issued to an inmate who completes general education programs, formal occupation training, on-the-job and apprentice training and work assignments. With the inmate's consent, transcripts may be sent to schools and colleges, business, industries and other agencies.

§ 544.83 Inmate tutors.

Institutions may establish an inmate tutor/aide program. Guidelines shall be developed regarding the training and supervision of inmate tutors/aides where such programs are available.

Subpart J—[Removed and Reserved]

4. In part 544, subpart J, consisting of §§ 544.90 and 544.91, is removed and reserved.

[FR Doc. 93–30712 Filed 12–15–93; 8:45 am]
BILLING CODE 4410–05–P

federal register

Thursday
December 16, 1993

Part X

Department of Education

34 CFR Parts 76 and 298

State-Administered Programs and Federal, State, and Local Partnership for Educational Improvement; Proposed Rule

DEPARTMENT OF EDUCATION

34 CFR Parts 76 and 298

RIN 1880-AA59

State-Administered Programs and Federal, State, and Local Partnership for Educational Improvement

AGENCY: Department of Education.

ACTION: Notice of proposed rulemaking.

SUMMARY: The Secretary proposes to amend Part 76 of the Education Department General Administrative Regulations (EDGAR) to require a State to file its State plan and other related documents under a given program by a date certain or face deferral of the date on which the State may begin to obligate funds under the program. The Secretary also announces a policy not to grant pre-award costs before the date a State may begin to obligate funds. The Secretary proposes to take these actions to protect the Federal Government from interest liabilities under the Cash Management Improvement Act of 1990 when the Department is late in making an initial payment under a State-administered program because the State failed to submit a plan or other required document in a timely fashion.

DATES: Comments must be received on or before January 18, 1994.

ADDRESSES: All comments concerning these proposed regulations should be addressed to Peter Wathen-Dunn, U.S. Department of Education, 400 Maryland Avenue SW., room 4091, Washington, DC 20202-2243.

FOR FURTHER INFORMATION CONTACT: Peter Wathen-Dunn, Telephone: (202) 401-3690. Individuals who use a telecommunications device for the deaf (TDD) may call the Federal Information Relay Service (FIRS) at 1-800-877-8339 between 8 a.m. and 8 p.m., Eastern time, Monday through Friday.

SUPPLEMENTARY INFORMATION: The Cash Management Improvement Act of 1990 (CMIA) was passed by Congress to ensure greater efficiency, effectiveness, and equity in the exchange of funds between the Federal Government and the States. Under this statute and the Treasury Department's implementing regulations at 31 CFR part 205, the Federal Government is liable for interest payments to a State that disburses its own funds for Federal program purposes before the date that Federal funds are deposited to the State's bank account for those obligations, 31 U.S.C. 6503(d). Conversely, a State must pay interest to the Federal Government from the time Federal funds are deposited to the State's account until the time that those funds are paid out by the State, 31 U.S.C. 6503(c).

The CMIA applies to "major Federal assistance programs," which are determined under a chart in the implementing Treasury regulations at 31 CFR 205.3 and appendix A to part 205, subpart A. The chart establishes thresholds for CMIA coverage based on a comparison between the amount of funds expended in a State under a particular program and the total Federal assistance expenditures in the State. The current thresholds established by the Treasury Department for coverage under the CMIA happen to be the same as the thresholds for applicability of OMB Circular A-128, which requires single audits of major Federal assistance programs.

The provisions of the CMIA are being phased in under the Treasury regulations so that only the largest major Federal assistance programs of the Federal Government are affected during the first year of CMIA applicability, which started on July 1, 1993. Starting on July 1, 1994, all major Federal assistance programs of the Federal Government will be covered. For the Department of Education, starting on July 1, 1994, the Department expects that formula grant State-administered programs of the Department will meet the threshold for coverage in most, if not all, States.

The Treasury regulations implementing the CMIA at 31 CFR 205.11(c) specifically provide that—

If a State pays out its own funds for program purposes without obligational authority, the Federal government will incur an interest liability if * * * obligational authority is subsequently established to permit payment for the State's expenditure.

The Department's current regulations on obligational authority at 34 CFR 76.703(a) provide—

A State may not begin to obligate funds under a program until the later of the following two dates:

(1) The date that the State plan is mailed or hand delivered to the Secretary in substantially approvable form.

(2) The date that the funds are first available for obligation by the Secretary.

Under 34 CFR 76.703(a), which applies to all State-administered programs, whether or not the program is subject to the CMIA, any obligations made by a State after the date that funds become available for obligation by the Secretary but before the date the State plan was submitted to the Secretary in substantially approvable form would be unallowable. Thus, under the Treasury regulations, interest would not be charged to the Federal Government for State expenditures of funds during that period; State expenditures during this period would be made without obligational authority.

However, if obligations under a program are unallowable for a significant period of time, there are major repercussions for the program. For example, a State could not use State obligations for matching or maintenance-of-effort purposes if those obligations are made during a period when obligations are unallowable. Because the effect of making all obligations unallowable from the date the Secretary may obligate funds to the date the plan is submitted in substantially approvable form can have major consequences, and because some States are consistently late in submitting State plans and other documents needed to demonstrate eligibility under a program, the Department has, in the past, granted pre-award costs, as authorized under the cost principles in OMB Circular A-87, to cover the period when costs would otherwise be unallowable under § 76.703.

The Department readily granted pre-award costs in the past because there was no penalty to the Federal Government for doing so. However, under the CMIA and 31 CFR 205.11(c), the granting of pre-award costs constitutes a subsequent establishment of obligational authority, which will require the Federal Government to pay interest if the State expends its own funds for Federal program purposes during the pre-award period. Because some States are significantly late in submitting State plans, or in making amendments to bring the plans into substantially approvable form, the Department's past practice of granting pre-award costs would lead to major interest liabilities for the Federal Government. For example, if the Department continues to experience late submissions and amendments, it can expect potential liabilities in the millions of dollars. Thus, the Secretary has concluded that the Federal Government can no longer afford for the Department to grant pre-award costs as it has done in the past. As a result, the Secretary has decided that the Department will no longer grant pre-award costs. There will be no exceptions to this rule after the date that funds become available for obligation by the Secretary for fiscal year 1995.

In addition, the Department needs time to determine whether a State plan is substantially approvable. Consequently, the Secretary currently establishes State-plan submission dates under most State-administered

programs that are, depending upon the nature of the program, two to four months before the date that funds become available for obligation by the Secretary. The Secretary proposes to establish a default submission date in the revised § 76.703 that is three months before the date funds become available for obligation by the Secretary. Thus, a program does not have to separately establish a submission date if three months provides sufficient time for review of State plans under the program. The Secretary recognizes the Department's responsibility to make decisions about State plans in a timely manner and is taking steps to expedite the processing of State plans.

Under the current § 76.703, if a State submits its State plan in substantially approvable form after the date funds become available for obligation by the Secretary, the State may begin to obligate funds on the date the plan was submitted. Thus, if the Secretary may begin to obligate funds on July 1, and the State submits a State plan in substantially approvable form on July 2, under the current § 76.703 the State may begin to obligate funds on July 2. However, the Secretary cannot release funds to the State until the Department has determined that the plan is substantially approvable. If the Department takes two months to determine that the plan is substantially approvable, the Federal Government would have to pay interest for expenditures of State funds made for Federal program purposes from the date of each State expenditure to the date that the Department deposits funds to the State's bank account. Thus, the Federal Government is penalized under the current rule for a State's failure to submit a plan in a timely fashion.

The Secretary proposes to amend § 76.703 so that the Department is not penalized for a State's late submission of a plan. Under the proposed regulation, if a State is late in submitting its plan and the Secretary determines that the plan was substantially approvable after the date that funds become available for obligation by the Secretary, the date that a State may begin to obligate funds would be deferred one day for each day that the State is late in submitting its State plan. Also, if the Department determines that a State plan is not substantially approvable based on the original submission, the date that a State may begin to obligate funds is also deferred one day for each day after the State receives notice of the Department's determination through the date that the State submits a change that makes the plan substantially approvable. Of course, if the Department notifies a State that a plan is substantially approvable before the deferred date calculated as described above, the proposed regulation would provide that the State could begin to obligate funds on that earlier date. The Secretary has decided to include a note to the revised § 76.703 explaining the application of the proposed regulation under the various circumstances that may arise under the regulation.

Under many programs of the Department, a State must submit other documents in addition to a State plan to prove eligibility. For example, under the Rehabilitation Act of 1973, a State must also submit documents demonstrating that the State has met maintenance-of-effort requirements under the statute. Thus, the proposed regulation provides that the Secretary will not determine whether a State plan is substantially approvable until the State has submitted all documents needed to prove eligibility under the program. In addition, a State must submit all documents needed to prove eligibility on or before the date that the State must submit its State plan, including any reports containing information necessary to determine eligibility. This regulation is not intended to override requirements in the Education Department General Administrative Regulations regarding when reports must be submitted.

The Secretary also proposes to amend § 76.703 to change the provision that determines when a State plan or other document is submitted to the Department. Under the current rule, the submission date is the date that the document is mailed or hand delivered to the Secretary. Many State plans are voluminous documents contained in boxes that are submitted by mail at less than first class rate. The Department often receives these documents a week or more after the date that they are mailed. This delay between the "submission" date and the date that the Department actually receives the document can create an interest penalty for the Federal Government if it results in delaying the date that the Department determines the State plan is substantially approvable past the date the Secretary may begin to obligate funds. Therefore, the Secretary proposes to change the submission date to the date that a State plan or other document is actually received by the Department.

Finally, the Secretary proposes to amend § 76.703 to clarify what is required to make a change to a State plan that has been submitted to the Department. A State employee may submit proposed changes to the plan on an informal basis to determine whether the proposed changes would be sufficient to bring the plan into compliance. A new paragraph (e) is intended to clarify that informal submissions that have not been approved by the State officer responsible for submission of the plan (or that official's delegate) are not adequate to toll the clock for the purposes of deferring the date that a State may begin to obligate funds under the program.

Another issue regarding the payment of interest under the CMIA involves the information that a State supplies to the Department when it requests funds under a program subject to the CMIA. As discussed in the preamble to the final regulations published by the Treasury Department on September 24, 1992, only programs listed in the Catalog of Federal Domestic Assistance (CFDA) may be covered by the CMIA; therefore, use of CFDA numbers is key to the interest tracking provisions of the Treasury regulations. The Department currently includes the CFDA number of the program under which the grant is being made on the notification of grant award. The Secretary proposes to add a new section to EDGAR that would require a State to provide to the Department the CFDA number of the program under which it is requesting funds if the program is subject to the CMIA. For those programs not covered by the CMIA, a State has discretion to identify the CFDA number when requesting funds.

Part 298 implements Chapter 2, Title I of the Elementary and Secondary Education Act of 1965. Part 298 specifically lists the sections in subpart G of part 76 that apply to Chapter 2, including the regulation in 34 CFR 76.703. Thus, to make the new § 76.708, Requesting funds by CFDA number, also apply to Chapter 2, the new section would have to be listed in the "Applicable regulations" section in part 298. Thus, the Secretary proposes to make a technical amendment to part 298 to apply the proposed Requesting funds by CFDA number to Chapter 2.

Regulatory Flexibility Act Certification

The Secretary certifies that these proposed regulations would not have a significant economic impact on a substantial number of small entities because the proposed regulations would affect only States and State agencies. States and State agencies are not defined as small entities under the Regulatory Flexibility Act.

Paperwork Reduction Act of 1980

These proposed regulations have been examined under the Paperwork Reduction Act of 1980 and have been found to contain no information collection requirements.

Invitation to Comment

Interested persons are invited to submit comments and recommendations regarding these proposed regulations.

All comments submitted in response to these proposed regulations will be available for public inspection, during and after the comment period, in room 5129, Federal Building #6, 400 Maryland Avenue SW., Washington, DC, between the hours of 8:30 a.m. and 4 p.m., Monday through Friday of each week except Federal holidays.

List of Subjects

34 CFR Part 76

Education Department, Grant programs—education, Grant administration, Intergovernmental relations, State-administered programs.

34 CFR Part 298

Administrative practice and procedure, Education, Elementary and secondary education, Grant programs—education, Private schools, Reporting and recordkeeping requirements, State-administered programs.

(Catalog of Federal Domestic Assistance Number does not apply)

Dated: December 14, 1993.

Richard W. Riley,

Secretary of Education.

The Secretary proposes to amend parts 76 and 298 of title 34 of the Code of Federal Regulations as follows:

PART 76—STATE-ADMINISTERED PROGRAMS

1. The authority citation for part 76 continues to read as follows:

Authority: 20 U.S.C. 1221e–3(a)(1), 2831(a), 2974(b), 3474, unless otherwise noted.

2. Section 76.703 is amended by removing paragraphs (a) and (b), redesignating paragraph (c) as paragraph (f), adding new paragraphs (a) through (e), and revising the authority citation to read as follows:

§ 76.703 When a State may begin to obligate funds.

(a) (1) The Secretary may establish, for a program subject to this part, a date by which a State must submit a State plan, and any other document required to prove eligibility under a program, for review by the Department.

(2) If the Secretary does not establish a date for the submission of State plans and any other document required to prove eligibility under a program subject to this part, the date for submission is three months before the date the Secretary may begin to obligate funds under the program.

(b) For the purposes of this section, a State submits a State plan or other document on the date that the Secretary receives the plan or document.

(c) If a State submits a State plan in substantially approvable form (or an amendment to the State plan that makes it substantially approvable), and submits any other document required to prove eligibility under a program, on or before the date established under paragraph (a) of this section, the State may begin to obligate funds on the date that the funds are first available for obligation by the Secretary.

(d) If a State submits a State plan in substantially approvable form (or an amendment to the State plan that makes it substantially approvable) or any other document required to prove eligibility after the date established under paragraph (a) of this section, and—

(1) The Department determines that the State plan is substantially approvable on or before the date that the funds are first available for obligation by the Secretary, the State may begin to obligate funds on the date that the funds are first available for obligation by the Secretary; or

(2) The Department does not determine that the State plan is substantially approvable until after the date that the funds are first available for obligation by the Secretary, the State may begin to obligate funds on the earlier of the two following dates:

(i) The date that the Secretary determines that the State plan is substantially approvable.

(ii) The date that is determined by adding to the date that funds are first available for obligation by the Secretary—

(A) The number of days after the due date established under paragraph (a) of this section that the State plan or other document required to prove eligibility is submitted; and

(B) If applicable, the number of days after the State receives notice that the State plan is not substantially approvable that the State submits additional information that makes the plan substantially approvable.

(e) (1) The Secretary does not determine whether a State plan is substantially approvable until all other documents required to prove eligibility have been submitted.

(2) Additional information submitted under paragraph (d)(2)(ii)(B) of this section must be signed by the person who submitted the original State plan (or an authorized delegate of that officer).

(3) The following examples describe how the regulation in § 76.703 would be applied in certain circumstances. For the purpose of these examples, assume that the grant program established an April 1 due date for the submission of the State plan and that funds are first available for obligation by the Secretary on July 1.

Example 1. Paragraph (c): A State submits a plan in substantially approvable form by April 1. The State may begin to obligate funds on July 1.

Example 2. Paragraph (d)(1): A State submits a plan in substantially approvable form on May 15, and the Department notifies the State that the plan is substantially approvable on June 20. The State may begin to obligate funds on July 1.

Example 3. Paragraph (d)(2)(i): A State submits a plan in substantially approvable form on May 15, and the Department notifies the State that the plan is substantially approvable on July 15. The State may begin to obligate funds on July 15.

Example 4. Paragraph (d)(2)(ii)(A): A State submits a plan in substantially approvable form on May 15, and the Department notifies the State that the plan is substantially approvable on August 21. The State may begin to obligate funds on August 14. (In this example, the plan is 45 days late. By adding 45 days to July 1, we reach August 14, which is earlier than the date, August 21, that the Department notifies the State that the plan is substantially approvable. Therefore, if the State chose to begin drawing funds from the Department on August 14, obligations made on or after that date would generally be allowable and the Department would be liable for interest if the State chose to use State funds to meet obligations during the period starting on August 14 and ending on August 21.)

Example 5. Paragraph (d)(2)(i): A State submits a plan on May 15, and the Department notifies the State that the plan is not substantially approvable on July 10. The State submits changes that make the plan substantially approvable on July 20 and the Department notifies the State that the plan is substantially approvable on July 25. The State may begin to obligate funds on July 25. (In this example, the original submission is 45 days late. In addition, the Department notifies the State that the plan is not substantially approvable and the time from that notification until the State submits changes that make the plan substantially approvable is an additional 10 days. By adding 55 days to July 1, we reach August 24. However, since the Department notified the State that the plan was substantially approvable on July 25, that is the date that the State may begin to obligate funds.)

Example 6. Paragraph (d)(2)(ii)(B): A State submits a plan on May 15, and the Department notifies the State that the plan is

not substantially approvable on August 1. The State submits changes that make the plan substantially approvable on August 20, and the Department notifies the State that the plan is substantially approvable on September 5. The State may chose to begin drawing funds from the Department on September 2, and obligations made on or after that date would generally be allowable. If the State chose to use State funds to meet obligations for the period starting on September 2 and ending on September 5, the Department would be liable for interest on the use of those funds. (In this example, the original submission is 45 days late. In addition, the Department notifies the State that the plan is not substantially approvable and the time from that notification until the State submits changes that make the plan substantially approvable is an additional 19 days. By adding 64 days to July 1, we reach September 2, which is earlier than September 5, the date that the Department notifies the State that the plan is substantially approvable.)

* * * * *

(Authority: 20 U.S.C. 1221e–3(a)(1), 2831(a), 2974(b), 3474, 31 U.S.C. 6503)

3. A new § 76.708 is added under the heading "General Administrative Responsibilities" to read as follows:

§ 76.708 Requesting funds by CFDA number.

A State that makes a request for funds under a program subject to the Cash Management Improvement Act of 1990 shall identify the program under which the funds are requested by the number of the program, as listed in the Catalog of Federal Domestic Assistance (CFDA).

(Authority: 20 U.S.C. 1221e–3(a)(1), 2831(a), 2974(b), 3474, 31 U.S.C. 6503)

PART 298—FEDERAL, STATE, AND LOCAL PARTNERSHIP FOR EDUCATIONAL IMPROVEMENT

4. The authority citation for Part 298 continues to read as follows:

Authority: 20 U.S.C. 2911–2952, 2971–2976, unless otherwise noted.

5. Section 298.2 is amended by redesignating paragraphs (a)(1)(i)(E) (*6*) through (*10*) as (a)(1)(i)(E) (*7*) through (*11*), respectively, and adding a new paragraph (a)(1)(i)(E)(*6*), to read as follows:

§ 298.2 Applicable regulations.

(a) * * *

(1) * * *

(i) * * *

(E) * * *

(*6*) Section 76.708 (Requesting funds by CFDA number).

* * * * *

[FR Doc. 93–30820 Filed 12–15–93; 8:45 am]

BILLING CODE 4000–01–P

federal register

Thursday
December 16, 1993

Part XI

The President

Executive Order 12885—Amendment to Executive Order No. 12829

Federal Register
Vol. 58. No. 240
Thursday, December 16, 1993

Presidential Documents

Title 3—

The President

Executive Order 12885 of December 14, 1993

Amendment to Executive Order No. 12829

By the authority vested in me as President by the Constitution and the laws of the United States of America, and in order to extend the time to issue the National Industrial Security Program Operating Manual, it is hereby ordered that Executive Order No. 12829, which is entitled "National Industrial Security Program," is amended as follows:

Section 1. Section 201(f) of Executive Order No. 12829 is amended to read: "The Manual shall be issued to correspond as closely as possible to pertinent decisions of the Secretary of Defense and the Director of Central Intelligence made pursuant to the recommendations of the Joint Security Review Commission and to revisions to the security classification system that result from Presidential Review Directive 29, but in any event no later than June 30, 1994."

Sec. 2. This order shall be effective immediately.

THE WHITE HOUSE,
December 14, 1993.

[FR Doc. 93-30945
Filed 12-15-93; 10:56 am]
Billing code 3195-01-P

Reader Aids

Federal Register

Vol. 58, No. 240

Thursday, December 16, 1993

INFORMATION AND ASSISTANCE

Federal Register

Index, finding aids & general information	202–523–5227
Public inspection desk	523–5215
Corrections to published documents	523–5237
Document drafting information	523–3187
Machine readable documents	523–3447

Code of Federal Regulations

Index, finding aids & general information	523–5227
Printing schedules	523–3419

Laws

Public Laws Update Service (numbers, dates, etc.)	523–6641
Additional information	523–5230

Presidential Documents

Executive orders and proclamations	523–5230
Public Papers of the Presidents	523–5230
Weekly Compilation of Presidential Documents	523–5230

The United States Government Manual

General information	523–5230

Other Services

Data base and machine readable specifications	523–3447
Guide to Record Retention Requirements	523–3187
Legal staff	523–4534
Privacy Act Compilation	523–3187
Public Laws Update Service (PLUS)	523–6641
TDD for the hearing impaired	523–5229

ELECTRONIC BULLETIN BOARD

Free Electronic Bulletin Board service for Public Law numbers, and Federal Register finding aids.	202–275–1538, or 275–0920

FEDERAL REGISTER PAGES AND DATES, DECEMBER

63277–63518 1
63519–63884 2
63885–64100 3
64101–64364 6
64365–64454 7
64455–64668 8
64669–64870 9
64871–65098 10
65099–65276 13
65277–65526 14
65527–65656 15
65657–65864 16

CFR PARTS AFFECTED DURING DECEMBER

At the end of each month, the Office of the Federal Register publishes separately a List of CFR Sections Affected (LSA), which lists parts and sections affected by documents published since the revision date of each title.

1 CFR

11 64871

3 CFR

Proclamations:
6320 (See USTR notice of Dec. 14) 65424
6352 (See USTR notice of Dec. 14) 65424
6630 63277
6631 63279
6632 63883
6633 64363
6634 64667
6635 65279
6636 65525
6637 65527
6638 65529

Executive Orders:
3406 (Revoked in part by PLO 7020) 64166
12163 (See EO 12884 64099
12543 (See notice of December 2) 64361
12544 (See notice of December 2) 64361
12748 (Amended by 12883) 63281
12829 (Amended by EO 12885) 65863
12865 (See DOT final rule of Dec. 10) 64904
12883 63281
12884 64099
12885 65863

Administrative Orders:
Memorandums:
December 1, 1993 64097
Presidential Determinations:
No. 94–4 of November 19, 1993 63519
No. 94–5 of December 3, 1993 65277
No. 94–6 of December 6, 1993 65099

Notices:
December 2, 1993 64361

5 CFR

52 64365
293 65531
351 65531
430 65531
432 65531
451 65531
511 65531
530 65531
531 65531
536 65531
540 65531
575 65531
591 65531
595 65531
771 65531
831 ..... 64366, 65243

7 CFR

1 64353
54 64669
75 64101
301 64102
400 64872
401 64873
905 65538
920 65101
955 64103
981 64105
987 64103
989 ..... 64106, 64107
997 64109
1001 63283
1002 63283
1004 63283
1005 63283
1007 63283
1011 63283
1030 63283
1033 63283
1036 63283
1040 63283
1044 63283
1046 63283
1049 63283
1065 63283
1068 63283
1075 64110
1079 63283
1093 63283
1094 63283
1096 63283
1097 63283
1098 63283
1099 63283
1106 63283
1108 63283
1124 63283
1126 63283
1131 63283
1135 63283
1138 63283
1220 64670
1427 65102
1951 64455
3416 65646

Proposed Rules:
271 64172
981 64175
1007 65135
1040 64176

8 CFR

Proposed Rules:
210a 64695

9 CFR

94....65103
318....63521, 65254
381....65254
401....65254

10 CFR

1....64110
20....64110
30....64110
40....64110
70....64110
73....64110
835....65458
Proposed Rules:
710....64509

11 CFR

Proposed Rules:
100....64190
102....65559
113....64190

12 CFR

202....65657
204....64112
265....65539
303....64455
332....64458
333....64460
362....64462
Proposed Rules:
211....65560
230....64190, 65293
330....64521
510....64695
611....64442

13 CFR

121....65281
123....64672

14 CFR

39....63523, 63524, 64112, 64114, 64487, 64874, 64875, 64877, 65104, 65115, 65282, 65283, 65662
71....63293, 63885, 63886, 64116, 64117, 64444, 64488, 64879, 64880
158....64118
Proposed Rules:
25....64700
31....64450
33....63902
39....63305, 63307, 64198, 64199, 64200, 64386, 64705, 64707, 64708, 65567, 65569
71....63308, 63309, 63903, 63904, 63905, 63906, 64387, 64525, 64710
73....63908

15 CFR

770....65540
771....64674
772....65540
788....65540
799....64674
943....65664
946....64088
Proposed Rules:
303....65294
935....65686
936....65686
942....65686
944....65686
946....64202

16 CFR

228....64881
1000....64119
Proposed Rules:
307....63488
309....64914
1303....63311

17 CFR

200....64120
204....64369
230....65541
239....65541
270....64353

18 CFR

141....65542
Proposed Rules:
141....63312
388....63312

19 CFR

201....64120
Proposed Rules:
151....65135
142....65135
210....64711

20 CFR

404....64121, 64882, 64883, 64886, 64890, 65243
416....63887, 63888, 64883, 64892, 64893
Proposed Rules:
404....64207
416....64207

21 CFR

5....64489
16....65514
100....64123
176....65284
177....65546
178....64894
310....65452
358....65452
510....63890
520....65664
522....65285
558....63890
1220....64137
1270....65514
Proposed Rules:
5....65139
25....65139
100....64208
170....65139
171....65139
174....65139
179....64526
812....64209
813....64209
820....64353

22 CFR

89....65118

23 CFR

500....63442, 64374
625....64895
626....63422, 64374
655....65084
Proposed Rules:
657....65830
658....65677

24 CFR

219....64138
246....64032
266....64032
905....64141
970....64141
Proposed Rules:
300....64713
310....64713
390....64713
3500....64066

25 CFR

262....65246

26 CFR

1....64897
Proposed Rules:
301....63541

27 CFR

9....65123
Proposed Rules:
4....65295

28 CFR

2....65547
544....65850, 65851
Proposed Rules:
2....65571, 65572

29 CFR

2619....65548
2621....65551
2676....65548

30 CFR

50....63528
70....63528
71....63528
90....63528
207....64899
208....64899
210....64899
216....64899
218....64899
219....64899
220....64899
228....64899
229....64899
243....64899
925....64142
936....64374
938....64151
Proposed Rules:
906....64210
914....64212, 65679
934....64528
944....64529
950....65681
Proposed Rules:
700....63316
701....63316
705....63316
706....63316
715....63316
716....63316
785....63316
825....63316
870....63316

31 CFR

317....63529
590....64904

32 CFR

95....63293
706....64678
Proposed Rules:
2....63542

33 CFR

1....65665
66....64153
80....65667
110....65140, 65285
117....65668
165....65669
334....64383
Proposed Rules:
156....63544, 65683
157....65298, 65683
165....65684
166....65686
167....65686

34 CFR

648....65838
Proposed Rules:
76....65856
298....65856
99....65298
647....63870

36 CFR

Proposed Rules:
6....65141
292....65300
1220....64915

37 CFR

1....64154, 64155
2....64154
5....64155
10....64154, 64155
304....63294

38 CFR

21....63529

39 CFR

Proposed Rules:
111....64918

40 CFR

35....63876
52....64155, 64157, 64158, 64161, 64678, 65286
60....64158
79....65552
80....65552
81....64161, 64490
82....65018
85....65552
88....64679
144....63890
146....63890
180....63294, 64492, 64493, 64495, 64496, 65554
228....64497
300....63531
372....63496, 63500
721....63500
Proposed Rules:
51....65573
52....63316, 63545, 63547,

63549, 64530, 65307, 65309, 65573, 65686, 65688, 65691
60 65573
61 65573
63 65768
64 65573
68 65311
80 64213
141 65622
143 65622
180 ..... 64536, 64538
300 ..... 63551, 64539

41 CFR
101–38 65288
101–39 ..... 63631, 65288
Proposed Rules:
201–3 64389
201–4 64389
201–9 64389
201–11 64389
201–18 64389
201–20 64389
201–21 64389
201–22 64389
201–23 64389
201–24 64389
201–39 64389

42 CFR
405 63626
414 63626
424 65126
491 63533
Proposed Rules:
67 63906
413 65130
435 65312
436 65312
440 65312
447 65312

43 CFR
Public Land Orders:
7012 64498
7013 64165
7014 64498
7015 64499
7016 64499
7017 64692
7018 64692
7019 64693
7020 64166
7021 65130
Proposed Rules:
230 65692
406 65693
419 65693
423 65694
426 64277
Group 3400 64919

44 CFR
64 63899

45 CFR
400 64499
1602 65291
Proposed Rules:
1370 64920

46 CFR
1 65130
67 ..... 65130, 65243
232 64798
585 64909
Proposed Rules:
12 64278
16 64278

47 CFR
63 64167
64 65669
69 65669
73 ..... 63295, 63296, 63536, 65132, 65133, 65671, 65672, 65673
76 64168
97 64384
Proposed Rules:
15 64541
63 64280
68 65153
73 ..... 63318, 63319, 63320, 63321, 63553, 65155
76 64541

48 CFR
232 64353
501 64693
509 64693
552 64693
9903 65556
Proposed Rules:
9 63494
15 64824
52 ..... 63492, 63494, 64826
904 63553
917 63553
936 63553
939 63556
943 63553
952 63553
970 63553

49 CFR
7 65824
541 63296
544 63299
571 ..... 63302, 64168, 65673
614 ..... 63442, 64374
Proposed Rules:
391 65634
396 64923
571 ..... 63321, 65156
583 63327
659 64856
1181 65695
1182 65695
1186 65695
1188 65695
1312 64717

50 CFR
17 65088
20 65656
216 ..... 63536, 65133
625 65134
663 64169
672 65556
675 ..... 65292, 65556
Proposed Rules:
17 ..... 63328, 63560, 64281, 64828, 64927, 65097, 65325, 65696
20 63488
21 63488
215 64285
216 64285
222 64285
611 64798
625 64393
638 65327
650 63329
672 64798
675 65574

LIST OF PUBLIC LAWS

Note: No public bills which have become law were received by the Office of the Federal Register for inclusion in today's **List of Public Laws**.

Last List December 13, 1993

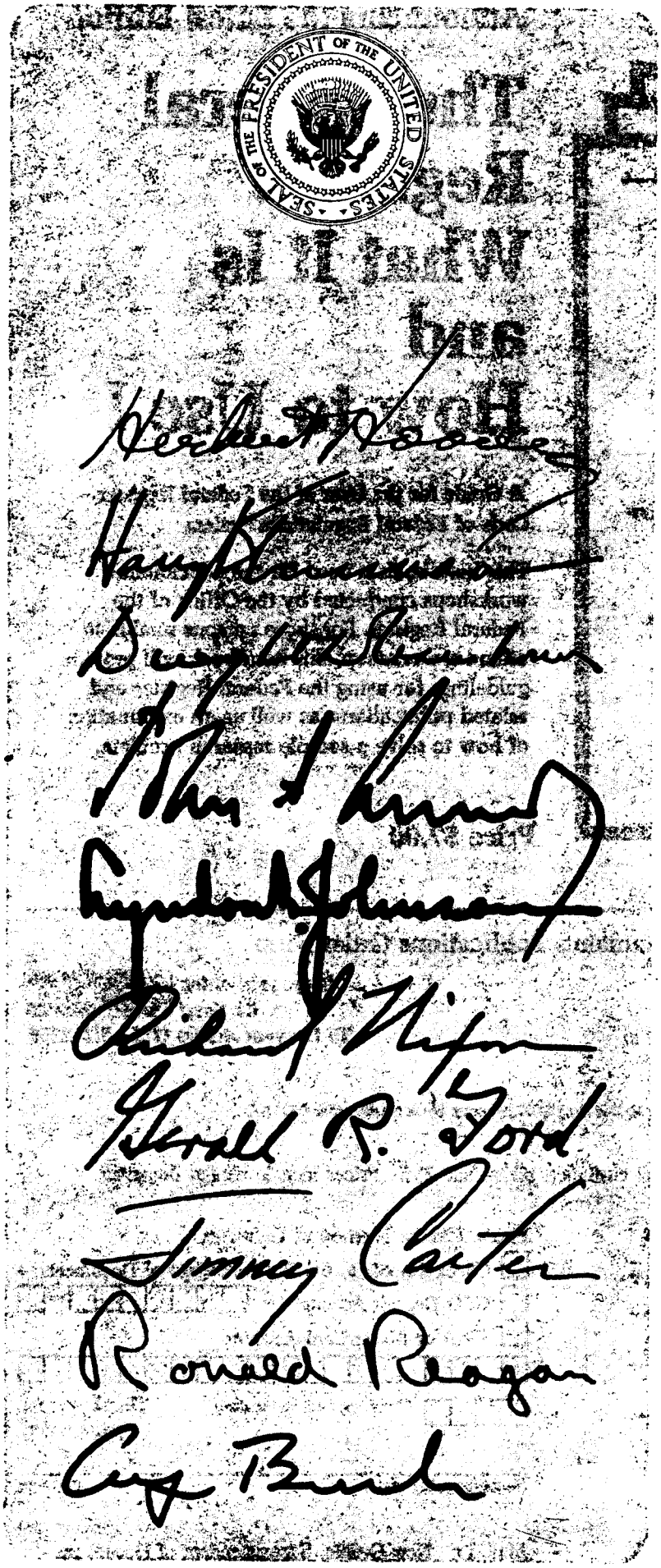

Public Papers of the Presidents of the United States

Annual volumes containing the public messages and statements, news conferences, and other selected papers released by the White House.

Volumes for the following years are available; other volumes not listed are out of print.

Ronald Reagan

1983 (Book I) $31.00

1983 (Book II) $32.00

1984 (Book I) $36.00

1984 (Book II) $36.00

1985 (Book I) $34.00

1985 (Book II) $30.00

1986 (Book I) $37.00

1986 (Book II) $35.00

1987 (Book I) $33.00

1987 (Book II) $35.00

1988 (Book I) $39.00

1988–89 (Book II) $38.00

George Bush

1989 (Book I) $38.00

1989 (Book II) $40.00

1990 (Book I) $41.00

1990 (Book II) $41.00

1991 (Book I) $41.00

1991 (Book II) $44.00

1992 (Book I) $47.00

Published by the Office of the Federal Register, National Archives and Records Administration

Mail order to:
New Orders, Superintendent of Documents
P.O. Box 371954, Pittsburgh, PA 15250–7954