FEDERAL REGISTER

THE NATIONAL ARCHIVES OF THE UNITED STATES — LITTERA SCRIPTA MANET — 1934

VOLUME 7 NUMBER 51

Washington, Saturday, March 14, 1942

Rules, Regulations, Orders

TITLE 7—AGRICULTURE

CHAPTER VII—AGRICULTURAL ADJUSTMENT AGENCY, AGRICULTURAL CONSERVATION AND ADJUSTMENT ADMINISTRATION

[PN-514-4]

PART 729—NATIONAL MARKETING QUOTA FOR PEANUTS[1]

By virtue of the authority vested in the Secretary of Agriculture by Title III of the Agricultural Adjustment Act of 1938 (52 Stat. 31, 7 U.S.C. 1940 ed. 1301 *et seq.*), as amended, the regulations pertaining to marketing quotas for peanuts of the crop planted in the calendar year 1941 (Form PN-514), prescribed June 7, 1941, as amended on June 28, August 25, and October 11, 1941, are hereby further amended by the addition of the following new section:

§ 729.39 *Marketing of excess peanuts for seed for planting peanuts for oil in 1942.* Notwithstanding any other provisions of this part, collection or payment of the penalty of three cents per pound will not be required for excess peanuts marketed by the producer thereof to another producer for seed for planting peanuts for oil in 1942. The marketing of peanuts under such conditions shall constitute a diversion of the peanuts: *Provided,* That (a) the peanuts are marketed to a person engaged in farming in 1942, (b) the price charged and paid for the excess peanuts shall be the market value thereof for crushing for oil as of the date of delivery, and (c) the peanuts are purchased for the sole purpose of planting peanuts for oil during the calendar year 1942. Peanuts so diverted shall be marketed through the county committee for the county in which the peanuts were produced and each county committee is hereby designated as an agency to which excess peanuts of the crop of peanuts planted in 1941 may be delivered, and through which such peanuts may be marketed, for the sole purpose of use as seed for peanuts of the 1942 crop to be grown in excess of farm acreage allotments, in accordance with the provisions of this section.

Done at Washington, D. C. this 12th day of March, 1942. Witness my hand and the seal of the Department of Agriculture.

[SEAL] CLAUDE R. WICKARD, *Secretary of Agriculture.*

[F. R. Doc. 42-2188; Filed, March 13, 1942; 11:38 a. m.]

[1] 6 F.R. 2779, 3164, 4359, 5199.

TITLE 10—ARMY: WAR DEPARTMENT

CHAPTER VIII—PROCUREMENT AND DISPOSAL OF EQUIPMENT AND SUPPLIES

PART 81—PROCUREMENT OF MILITARY SUPPLIES AND ANIMALS[1]

§ 81.26 *Performance bonds*—(a) *When required*—(1) *Supply contracts*—(i) *In general.* The question as to the necessity of a performance bond is one requiring the exercise of sound discretion and there is no requirement that a performance bond will be furnished in every case; especially is this so in the case of negotiated fixed-price supply contracts where performance bonds should be required only in exceptional cases. At the discretion of the chief of arm, service, or bureau concerned, except as provided in (ii) below, performance bonds may be required or waived in special cases, or by general instructions issued to contracting officers, but such bond may not be waived when it has been stated in an invitation for bids that a performance bond will be required. A performance bond may not be required with respect to contracts let after advertising for bids unless it has been stated in the invitation for bids that it will be required. See § 81.10 (a) (6).

(ii) *Negotiated fixed-price supply contracts of $5,000,000 or more.* In the case of negotiated fixed-price-supply contracts amounting to $5,000,000 or more,

[1] § 81.26 (a) (1) is amended.

CONTENTS

RULES, REGULATIONS, ORDERS

	Page
TITLE 7—AGRICULTURE:	
Agricultural Adjustment Agency:	
Peanuts, marketing of excess for seed	1995
TITLE 10—ARMY: WAR DEPARTMENT:	
Procurement; performance bond regulations amended	1995
TITLE 16—COMMERCIAL PRACTICES:	
Federal Trade Commission:	
International Parts Corp., cease and desist order	1996
TITLE 26—INTERNAL REVENUE:	
Bureau of Internal Revenue:	
Receivers' certificates of indebtedness, amendments	1997
TITLE 32—NATIONAL DEFENSE:	
Defense Communications Board:	
Coastal and marine radio stations, Navy Department authorized to use, control, supervise, etc	2006
Office of Price Administration:	
Price schedules, amendments, orders:	
Affirmations of compliance in certain schedules revoked	2000
Steel castings	2001
Textile fabrics; finished piece goods of cotton, rayon, and mixtures	2004
Typewriters, used (2 documents)	2002, 2003
Zinc, primary slab	2000
War Production Board:	
Canned foods, conservation order, etc. (2 documents)	1998, 1999
Plumbing and heating emergency repairs, preference order	1997
Tinplate and terneplate, conservation order interpreted	1998
TITLE 34—NAVY:	
Department of the Navy:	
Coastal and marine relay radio stations, use control, supervision, inspection, etc	2006

(Continued on next page)

FEDERAL REGISTER

Published daily, except Sundays, Mondays, and days following legal holidays by the Division of the Federal Register, The National Archives, pursuant to the authority contained in the Federal Register Act, approved July 26, 1935 (49 Stat. 500), under regulations prescribed by the Administrative Committee, approved by the President.

The Administrative Committee consists of the Archivist or Acting Archivist, an officer of the Department of Justice designated by the Attorney General, and the Public Printer or Acting Public Printer.

The daily issue of the FEDERAL REGISTER will be furnished by mail to subscribers, free of postage, for $1.25 per month or $12.50 per year, payable in advance. Remit money order payable to the Superintendent of Documents directly to the Government Printing Office, Washington, D. C. The charge for single copies (minimum, 10¢) varies in proportion to the size of the issue.

CONTENTS—Continued

TITLE 41—PUBLIC CONTRACTS: Page
Division of Public Contracts:
Seamless hosiery industry, minimum wage rates amended ---- 2007
TITLE 43—PUBLIC LANDS: INTERIOR:
Grazing Service:
"Prior water" defined; amendment of Federal Range Code ---- 2007
TITLE 46—SHIPPING:
Bureau of Marine Inspection and Navigation:
General rules and regulations, amendments ---- 2048
Marine engineering regulations, amendments ---- 2008
TITLE 50—WILDLIFE:
Fish and Wildlife Service:
Alaska, amendments to game regulations ---- 2062
Alaska Game Commission regulations; guides, poisons, licenses ---- 2063

NOTICES

Civil Aeronautics Board:
Detroit, Mich., aircraft accident investigation ---- 2071
Department of the Interior:
Bituminous Coal Division:
Cardwell, W. M., petition dismissed ---- 2071
District Board 2, relief granted ---- 2071
Hearings, postponements, etc.:
Beccaria Coal Mining Co. ---- 2068
Bituminous Coal Consumers' Counsel ---- 2064
Central West Coal Co. ---- 2069
District Board 4 ---- 2064
Henry Coal Co. ---- 2067
High Point Coal Co. ---- 2069
Pacific Coal Co. ---- 2065
Sun Coal Co. ---- 2064
Turley, J. S. ---- 2066
Wilson, C. C. ---- 2067

CONTENTS—Continued

Federal Communications Commission: Page
Hearings:
Hoosier Broadcasting Co. ---- 2072
WKAL, Inc. ---- 2072
Federal Power Commission:
Glacier Silver Lead Mining Co., application for surrender of license ---- 2072
Federal Trade Commission:
Kimble Glass Co., hearing ---- 2072
Foreign-Trade Zones Board:
Stapleton, Staten Island, N. Y., request for suspension of operations during period of Army occupancy ---- 2074

before a performance bond is required, the approval of the Under Secretary of War shall be obtained. Whenever the contracting officer shall deem it necessary in a particular case that a performance bond be required, he shall submit to the Under Secretary of War, through the chief of the supply arm or service concerned, a request for permission to require such performance bond together with such information as may be necessary to enable the Under Secretary of War to pass thereon. Such request may be submitted either—

(*a*) During the negotiations (in which case it may be made by radio or wire if necessary); or

(*b*) At the time when the request for authority to make the award is submitted. (49 Stat. 793; 40 U.S.C. 270a; Act April 29, 1941, Public Law 43, 77th Congress) [Par. 10*a* (1), AR 5-220, Aug. 7, 1940, as amended by Proc. Cir. 22, W.D., March 6, 1942]

* * * * *

[SEAL] J. A. ULIO,
Major General,
The Adjutant General.

[F. R. Doc. 42-2177; Filed, March 13, 1942; 10:13 a. m.]

TITLE 16—COMMERCIAL PRACTICES

CHAPTER I—FEDERAL TRADE COMMISSION

[Docket No. 4513]

PART 3—DIGEST OF CEASE AND DESIST ORDERS

IN THE MATTER OF INTERNATIONAL PARTS CORPORATION

§ 3.48 (b) *Disparaging competitors and their products—Goods—Safety:* § 3.66 (a2) *Misbranding or mislabeling—Comparative data or merits:* § 3.66 (j15) *Misbranding or mislabeling—Safety:* § 3.66 (j20) *Misbranding or mislabeling—Scientific or other relevant facts.* In connection with offer, etc., in commerce, of respondent's automobile mufflers, and among other things, as in order set forth, representing that the use on an automobile of a muffler having seams which are spotwelded, locked, or crimped results in greater danger of carbon monoxide gas poisoning to the occupant of such automobile than does the use of a muffler having continuous electric-welded seams; prohibited. (Sec. 5, 38 Stat. 719, as amended by sec. 3, 52 Stat. 112; 15 U.S.C., Sup. IV, sec. 45b) [Cease and desist order, International Parts Corporation, Docket 4513, March 9, 1942]

§ 3.6 (t) *Advertising falsely or misleadingly—Qualities or properties of product:* § 3.6 (x) *Advertising falsely or misleadingly—Results.* In connection with offer, etc., in commerce, of respondent's automobile mufflers, and among other things, as in order set forth, representing, through the use of the unqualified word "Prevents", or any other unqualified word of similar import, or by any other means, that the finish on respondent's mufflers affords permanent protection against rust or corrosion; prohibited. (Sec. 5, 38 Stat. 719, as amended by sec. 3, 52 Stat. 112; 15 U.S.C., Sup. IV, sec. 45b) [Cease and desist order, International Parts Corporation, Docket 4513, March 9, 1942]

At a regular session of the Federal Trade Commission, held at its office in the City of Washington, D. C., on the 9th day of March, A. D. 1942.

This proceeding having been heard by the Federal Trade Commission upon the complaint of the Commission, the answer of respondent, testimony and other evidence taken before Randolph Preston, a trial examiner of the Commission theretofore duly designated by it, in support of the allegations of said complaint and in opposition thereto, report of the trial examiner upon the evidence and the exceptions to such report, briefs in support of the complaint and in opposition thereto, and oral argument, and the Commission having made its findings as to the facts and its conclusion that the respondent has violated the provisions of the Federal Trade Commission Act;

It is ordered, That the respondent, International Parts Corporation, a corporation, and its officers, agents, representatives and employees, directly or through any corporate or other device, in connection with the offering for sale, sale and distribution of respondent's automobile mufflers in commerce, as "commerce" is defined in the Federal Trade Commission Act, do forthwith cease and desist from:

1. Representing, directly or by implication, that the use on an automobile of a muffler having seams which are spotwelded, locked, or crimped results in greater danger of carbon monoxide gas poisoning to the occupant of such automobile than does the use of a muffler having continuous electric-welded seams;

2. Representing, through the use of the unqualified word "Prevents", or any other unqualified word of similar import, or by any other means, that the finish on respondent's mufflers affords permanent protection against rust or corrosion.

It is further ordered, That the respondent shall, within sixty (60) days after service upon it of this order, file with the Commission a report in writing

setting forth in detail the manner and form in which it has complied with this order.

By the Commission.

[SEAL] OTIS B. JOHNSON, *Secretary.*

[F. R. Doc. 42-2185; Filed, March 13, 1942; 11:33 a. m.]

TITLE 26—INTERNAL REVENUE

CHAPTER I—BUREAU OF INTERNAL REVENUE

SUBCHAPTER C—MISCELLANEOUS EXCISE TAXES

[T.D. 5128]

PART 113—STAMP TAXES ON ISSUES AND TRANSFERS OF STOCKS AND BONDS, CONVEYANCES OF REALTY, PASSAGE TICKETS, AND FOREIGN INSURANCE POLICIES

Regulations 71 Amended—Receivers' Certificates of Indebtedness

To conform Regulations 71 (1941 Edition) [Part 113,[1] Code of Federal Regulations, 1941 Sup.] to the cases of *United States* v. *Powell,* (C.C.A. 4th, 1938) 95 F. (2d) 752, *cert. denied* (1938) 305 U.S. 619, *United States* v. *Pollard,* (C.C.A. 5th, 1940) 115 F. (2d) 134, and *Moore* v. *Stewart, Jr.,* (C.C.A. 6th, decided February 5, 1942), such regulations are amended by striking from § 113.55 paragraph (f) thereof, and by redesignating paragraph (g) of such section as paragraph (f).

(This Treasury decision is issued under the authority contained in section 3791 of the Internal Revenue Code (53 Stat. 467, 26 U.S.C., 1940 ed., 3791).)

[SEAL] NORMAN D. CANN, *Acting Commissioner of Internal Revenue.*

Approved: March 11, 1942.

JOHN L. SULLIVAN, *Acting Secretary of the Treasury.*

[F. R. Doc. 42-2156; Filed, March 12, 1942; 4:20 p. m.]

TITLE 32—NATIONAL DEFENSE

CHAPTER IX—WAR PRODUCTION BOARD

SUBCHAPTER B—DIVISION OF INDUSTRY OPERATIONS

PART 1022—PLUMBING AND HEATING EMERGENCY REPAIRS

Preference Rating Order No. P-84

§ 1022.1 *Preference Rating Order P-84.* For the purpose of facilitating the acquisition of Material entering into the Emergency Repairs of Plumbing Equipment and Heating Equipment (as hereinafter defined), a preference rating is hereby assigned to deliveries of such Material upon the terms hereinafter set forth.

(a) *Statement of policy.* It is the purpose of this Order to effectuate the policy of the War Production Board of making available materials required for plumbing and heating emergency repairs necessary to maintain minimum heating and sanitary conditions required for public health in the United States, its territories and possessions, without expansion or improvement of facilities, except where duly authorized or approved. The terms and conditions of this Order are to be interpreted in conformity with this expressed policy.

(b) *Definitions.* (1) "Plumbing equipment" means any equipment, fixtures, fittings, pipes, accessories or supplies of types used in, or connected to, water, sewer, or gas systems, regardless of whether or not connected with a central system: *Provided,* That "Plumbing Equipment" does not include any tools for use in installation or repairs, or any hoses, sprinklers or other devices of types commonly attached to outdoor faucets.

(2) "Heating equipment" means any primary heating unit used to provide building warmth and any accessory or appurtenance used in connection with such a primary heating unit.

(3) "Emergency repairs" means only those remedial repairs which are required by actual or imminent breakdown of Plumbing Equipment or Heating Equipment. It includes (but is not limited to) the emergency replacement of equipment which is worn out, damaged beyond repair or destroyed. It does not include the installation of superior type equipment to replace useable equipment, or a substitution more extensive than that which is necessary to replace the part or parts that are worn out, damaged or destroyed.

(4) "Installer" means any person who installs Plumbing Equipment or Heating Equipment, regardless of whether or not he is regularly engaged in installing such equipment.

(5) "Supplier" means any person—

(i) Who supplies Material which he has not in whole or in part manufactured, processed, assembled or otherwise physically changed (in some way other than by cutting or threading pipe), and

(ii) With whom a contract or purchase order has been placed for delivery of such Material to the Installer or to another Supplier.

(6) "Material" means any commodity, equipment, accessory, part, assembly or product of any kind.

(c) *Assignment of preference rating.* Preference Rating A-10 is hereby assigned, subject to the restrictions and conditions of paragraphs (e) and (f) hereof:

(1) To deliveries, to an Installer, of Material required by him for Emergency Repairs.

(2) To deliveries to any Supplier, who has received an order or contract to which the preference rating hereby assigned has been applied, of Material which will be delivered by him or another Supplier to the Installer pursuant to such rated order or contract, or will be physically incorporated into Material which will be so delivered; or which will be used, within the limitations of paragraph (e) (3) hereof to replace in such Supplier's inventory Material so delivered.

(d) *Persons entitled to apply preference rating.* The preference rating hereby assigned may, in the manner and to the extent hereby authorized, be applied by:

(1) The Installer;

(2) Any Supplier of Material to the delivery of which the preference rating has been applied as provided in paragraph (f).

(e) *Restrictions on use of rating*—(1) *Restrictions on installer and supplier.* No Installer or Supplier may apply the rating hereby assigned to obtain copper or copper base alloys which have been fabricated into sheets, wire, rods or tubes, or to obtain any scarce Material the use of which could be eliminated without serious loss of efficiency by substitution of less scarce Material or by change of design.

(2) *Restrictions on installer.* The Installer may not apply the rating to obtain delivery of Material on earlier dates than required to enable him to make Emergency Repairs.

(3) *Restrictions on supplier.* (i) No Supplier may apply the preference rating hereby assigned to obtain Material in greater quantities or on earlier dates than required to enable him to make on schedule a delivery rated hereunder or required to replace in his inventory Material so delivered. He shall not be deemed to require such Material if he can make his rated delivery and still retain a practicable working minimum inventory thereof; and if, in making such delivery, he reduces his inventory below such minimum, he may apply the rating only to the extent necessary to restore his inventory to such minimum.

(ii) A Supplier may defer application of the rating hereunder to purchase orders or contracts for Material to be placed by him until he can place a purchase order or contract for the minimum quantity procurable on his customary terms: *Provided,* That he shall not defer the application of any rating for more than three months after he becomes entitled to apply it.

(iii) A Supplier may apply the preference rating herein assigned only to obtain deliveries of Material which he will resell without manufacturing, processing or otherwise changing physically (other than by cutting or threading pipe) to fill a purchase order or contract rated hereunder or which he will use within the limitations of paragraph (e) (3) (i) hereof, to replace in his inventory Material so sold.

(f) *Application of preference rating.* (1) An Installer or Supplier, in order to apply the preference rating to deliveries of Material to him, must endorse the following statement on the original and all copies of the purchase order or contract for such Material, manually signed by a person duly authorized for such purpose by such Installer or Supplier:

Material for Emergency Repairs of Plumbing Equipment or Heating Equipment—

[1] 6 F.R. 6015.

Rating A-10 under Preference Rating Order No. P-84 with the terms of which I am familiar.

Name of Installer or Supplier
By ----------

Such endorsement shall constitute a certification to the War Production Board that such Material is required for the purpose stated and that the application of the rating is authorized by this Order. Any such purchase order or contract for such Material shall be restricted to Material which is rated in accordance herewith.

(2) The Provisions of this Order relative to application of a preference rating by the Installer shall not apply in the case of delivery to an Installer of any plumbing or heating repair item, the cost of which to the Installer is less than $5.00; *Provided,* That the Order placed by that Installer totals no more than $10.00. All such deliveries are deemed to be for repair purposes and, subject to the restrictions of paragraph (e) hereof, the Supplier may apply the rating hereby assigned to replace the stock so delivered.

(g) *Records.* In addition to the records required to be kept under Priorities Regulation No. 1, the Installer and each Supplier placing or receiving any purchase order or contract rated hereunder shall retain, for a period of two years, for inspection by representatives of the War Production Board, endorsed copies of all such purchase orders or contracts, whether accepted or rejected, segregated from all other purchase orders or contracts or filed in such manner that they can be readily segregated for such inspection.

In the case of replacement of a unit which has been worn out, damaged beyond repair or destroyed, the cost of which unit to the Installer exceeds fifty dollars ($50.00), the Intaller shall attach to each copy of the purchase order for a delivery rated hereunder, a statement signed by the ultimate user and by the Installer, which statement shall certify that repair of the unit is impracticable and shall specify:

(1) The unit being removed,

(2) The part or parts of such unit which failed,

(3) The age, model, make, size and serial number (where available) of such unit or parts,

(4) The replacing unit, its model, make, size and serial number (where available).

(h) *Reports.* The Installer and each Supplier, who applies the preference rating assigned hereunder, shall file such reports as may be required from time to time by the War Production Board.

(i) *Exception: Parties to whom other repairs and maintenance orders are applicable.* The preference rating herein assigned shall not be applied by any person to deliveries of repairs and maintenance items to which deliveries any other Order has assigned a preference rating.

(j) *Communications to War Production Board.* All reports required to be filed hereunder, and all communications concerning this Order, shall, unless otherwise directed, be addressed to: War Production Board, Washington, D C. Ref.: P-84.

(k) *Violations.* Any Person, who wilfully violates any provision of this Order or who by any act or omission falsifies records to be kept or information to be furnished pursuant to this Order, may be prohibited from receiving further deliveries of any Material subject to allocation, and such further action may be taken as is deemed appropriate, including a recommendation for prosecution under section 35 (A) of the Criminal Code (18 U.S.C. 80).

(l) *Revocation or amendment.* This Order may be revoked or amended at any time as to the Installer or any Supplier. In the event of revocation, deliveries already rated pursuant to this Order shall be completed in accordance with said rating unless the rating has been specifically revoked with respect thereto. No additional applications of the rating to any other deliveries shall thereafter be made by the Installer or Supplier affected by such revocation.

(m) *Applicability of Priorities Regulation No. 1.* This Order and all transactions affected thereby are subject to the provisions of Priorities Regulation No. 1, as amended from time to time, except to the extent that any provision hereof may be inconsistent therewith, in which case the provisions of this Order shall govern.

(n) *Effective date.* This Order shall take effect immediately. (P.D. Reg. 1, amended Dec. 23, 1941, 6 F.R. 6680; W.P.B. Reg. 1, Jan. 26, 1942, 7 F.R. 561, E.O. 9024, Jan. 16, 1942, 7 F.R. 329; E.O. 9040, Jan. 24, 1942, 7 F.R. 527; sec. 2 (a), Pub. Law 671, 76th Cong., 3d Sess., as amended by Pub. Law 89, 77th Cong. 1st Sess.)

Issued this 13th day of March 1942.

J. S. KNOWLSON,
Director of Industry Operations.

[F. R. Doc. 42-2189; Filed, March 13, 1942; 11:56 a. m.]

PART 1068—TINPLATE AND TERNEPLATE

Interpretation No. 1 of Conservation Order M-81

The following official interpretation is hereby issued by the Director of Industry Operations with respect to Conservation Order M-81 (§ 1068.1 *Conservation Order No. M-81* [1]), dated February 11, 1942:

Except where other limits are specified in Table II of Conservation Order M-81, paragraph (c) (3) of said Order limits the amount of tinplate which may be used to pack the secondary products listed in Table II of said Order to 100% of the amount of tinplate used during the year 1940. As stated in the heading to said Table II, these limits "relate only to the pack permitted for civilian consumption. To the extent of additional requirements by the Army, Navy, Lend-Lease or other U. S. Governmental Agency, such pack may be increased."

Conservation Orders M-86 and M-86-a (§§ 1084.1, 1084.2) require specified amounts of secondary products to be set aside for purchase by the Government. Orders M-86 and M-86-a do not require that actual purchase orders must have been placed for such goods before they are so set aside.

A question has arisen whether such additional pack is prohibited by Order M-81 when not made to fill an actual purchase order with a preference rating of higher than A-2, in accordance with paragraph (g) of said Order M-81. Such pack is not prohibited. The exception set forth in the heading of Table II of Order M-81 permitting a pack for Governmental requirements in addition to the quantity limitations of said Table II applies to the pack required to be set aside pursuant to Orders M-86 and M-86-a so that only such amount of canned goods as are required to be set aside by said Orders may be packed outside the quantity limitations of Order M-81 whether or not actual purchase orders for such canned goods have been placed by any Governmental Agencies.

When such products are not set aside pursuant to Order M-86, they are within the quantity limitations of said Table II even although they are ultimately purchased by the Army, Navy, Lend-Lease, or other U. S. Governmental Agency.

The individual restrictions set forth in Order M-81 relating to can sizes, repacking, and specific limitations on the form in which a product may be packed, apply to all products whether or not they are being set aside for purchase by the Army, Navy, and other Governmental Agencies. (P.D. Reg. 1, amended Dec. 23, 1941, 6 F.R. 6680; W.P.B. Reg. 1, Jan. 26, 1942, 7 F.R. 561, E.O. 9024, Jan. 16, 1942, 7 F.R. 329; E.O. 9040, Jan. 24, 1942, 7 F.R. 527; sec. 2 (a), Public Law 671, 76th Cong., 3d Sess., as amended by Public Law 89, 77th Cong., 1st Sess.)

Issued this 13th day of March 1942.

J. S. KNOWLSON,
Director of Industry Operations.

[F. R. Doc. 42-2192; Filed, March 13, 1942; 11:57 a. m.]

PART 1084—CANNED FOODS

Conservation Order M-86

The fulfillment of requirements for the defense of the United States has created a shortage in the supply of materials used in canning foods for defense, and the following Order is deemed necessary and appropriate in the public interest and to promote the national defense:

§ 1084.1 *Conservation Order M-86*—(a) *Applicability of Priorities Regulation No. 1.* This Order and all transactions affected thereby are subject to the provisions of Priorities Regulation No. 1 (Part 944), as amended from time to time, except to the extent that any provision hereof may be inconsistent therewith, in which case the provisions of this Order shall govern.

(b) *Definitions.* For the purposes of this Order:

(1) "Canner" shall mean any Person engaged in the business of canning foods

[1] 7 F.R. 947.

in hermetically sealed metal or glass containers and sterilizing the same by the use of heat.

(2) "Pack" shall mean the total amount, by weight, of all grades of any particular food canned by any Canner during the packing season in a particular locality after January 1, 1942. This definition of "pack" shall not be deemed to affect or change the meaning of the term "pack" as used in Conservation Order M-81, wherein such term refers to area of tinplate or terneplate.

(3) "Government Agency" shall mean any officer, board, agency, commission, or government-owned or government-controlled corporation of the United States specifically designated by the Director of Industry Operations.

(c) *Restrictions on canners.* (1) Each canner shall set aside for the requirements of Government Agencies such canned foods packed by him as the Director of Industry Operations may from time to time order, without regard to previously existing contracts. All such foods so set aside shall, unless and until released, be held for allocation to any Government Agency by the Director of Industry Operations. There shall not be calculated as part of the canned foods required to be set aside by this paragraph, canned foods delivered to any government agency when not so allocated to such Agency by the Director of Industry Operations.

(2) Each canner shall, within fifteen days after he has completed a seasonal Pack, or in the instance of a nonseasonal product, at such times as may be prescribed, mail to or file with the War Production Board a report thereof in such form as may, from time to time, be prescribed by the Director of Industry Operations.

(3) If any canned foods set aside for the requirements of Government Agencies have not been purchased within sixty days after the mailing or filing of the report prescribed in paragraph (c) (2), or such other time as the Director of Industry Operations may fix, the Canner may notify the War Production Board, in writing, that if such canned foods are not purchased within thirty days he will no longer hold such foods set aside. If any of such canned food is not purchased within thirty days after the mailing or filing of such notice, and if no further Order is issued with respect to it, it shall be deemed released and shall be available for unrestricted sale and distribution.

(d) *Certificates and reports relating to the cans covered by this order*—(1) *Certificates.* Each Canner who purchases any cans to pack any food for governmental use pursuant to this Order—whether such purchase is by contract or on open account order—shall furnish to the can manufacturer from whom he buys a certificate, signed by an authorized official, in substantially the form attached hereto as "Exhibit A", which shall constitute a certification to the War Production Board that such canner is familiar with the terms of this Order (in its present form or as it may be amended from time to time) and that, during the life of this Order, he will not use any cans purchased from such can manufacturer in violation of its terms. Only one such certificate covering all present and future purchases from a given can manufacturer, need be furnished by a canner to that can manufacturer but no can manufacturer shall be entitled to rely on any such certificate if he knows, or has reason to believe it to be false.

(2) *Reports.* Each Canner shall file such additional reports as the War Production Board may prescribe for the purpose of effective administration of this Order.

(e) *Inspection and grading.* Any canned foods required to be set aside under this Order shall be subject to inspection and grading at any time by the Director of Industry Operations, or any government agency thereto authorized by him.

(f) *Appeals.* Any Person affected by this Order who considers that compliance herewith would work an exceptional or unreasonable hardship upon him, may appeal to the Director of Industry Operations by letter, setting forth the pertinent facts and reasons such Person considers that he is entitled to relief. The Director may thereupon take such action as he deems appropriate.

(g) *Records.* All persons affected by this Order shall keep and preserve for not less than two years accurate and complete records concerning inventories, purchases, production and sales.

(h) *Audit and inspection.* All records required to be kept by this Order or by any rule, regulation or Order of the Director of Industry Operations shall, upon request, be submitted to audit and inspection by duly authorized representatives of the War Production Board.

(i) *Communications to War Production Board.* All reports required to be filed hereunder, and all communications concerning this Order, shall, unless otherwise directed, be addressed to War Production Board, Washington, D. C. Ref.: M-86.

(j) *Violations.* Any person who wilfully violates any provision of this Order, or who by any act or omission falsifies records to be kept or information to be furnished pursuant to this Order, may be prohibited from receiving further deliveries of any Material subject to allocation, and such further action may be taken as is deemed appropriate, including a recommendation for prosecution under section 35 (A) of the Criminal Code (18 U.S.C. 80).

(k) *Effective date and termination.* This Order shall take effect on the date of issuance hereof, and, shall continue in effect until revoked.

Issued this 13th day of March 1942.

J. S. KNOWLSON,
Director of Industry Operations.

EXHIBIT A

WAR PRODUCTION BOARD

DIVISION OF INDUSTRY OPERATIONS

Social Securities Building, Washington, D. C.

CANNER'S CERTIFICATE

Certificate required by Paragraph (d) (1) of Conservation Order M-86. One copy of this certificate is to be delivered to each can manufacturer from whom the canner purchases cans and is to cover all purchases present and future, so long as such Conservation Order, in its present form or as it may be amended from time to time, remains in effect.

_____
(Applicant's Name)

_____ _____
(Applicant's Address) (Date)

In accordance with Paragraph (d) (1) of Conservation Order M-86 of the War Production Board, to conserve the supply and direct the distribution of certain canned foods, the undersigned hereby certifies—and this shall constitute a certification to the War Production Board—that the undersigned applicant is familiar with the terms of said Conservation Order M-86, and any and all amendments thereto, and that said applicant will not use any cans purchased from

_____
(Name of Can Manufacturer)

_____
(Address of Can Manufacturer)

in violation of the terms of said order and amendments.

_____
(Legal Name of Applicant)

By_____

_____
(Title of Official Reporting)

Section 35A of the U. S. Criminal Code (18 U.S.C. 80) makes it a criminal offense to make a false statement or representation to any department or agency of the United States as to any matter within its jurisdiction.

[F. R. Doc. 42-2190; Filed, March 13, 1942; 11:56 a. m.]

PART 1084—CANNED FOODS

Supplementary Order No. M-86-a

§ 1084.2 *Supplementary Order M-86-a.*[1] (a) Pursuant to Order M-86, which this Order supplements, it is hereby ordered that each canner shall set aside to be delivered for the requirements of Government Agencies, pursuant to Order M-86, fruits and vegetables packed by him at any time in 1942 of the kinds and in the percentages set forth in columns A and B of Tables I and II, attached hereto.

If the type, style, or variety of any such fruits or vegetable is described in Column C, such percentage shall be in the type, style, and variety described. Such percentage shall be packed in can sizes in the order of preference specified in Column D, and shall be made up of the first preference grade of such fruit or vegetable specified in Column E, to the extent that the Canner's production of such grade is sufficient therefor. To the extent that the Canner's production of such grade is insufficient to meet such percentage, he shall set aside so much of his production of the second preference grade, if any, specified in Column F as is sufficient to complete such percentage. If his production of the grades specified in both Column E and F is insufficient for such purpose, the Canner shall set aside so much of his production of the third preference grade, if any, specified in Column G as is sufficient to complete such percentage.

(b) Any Canner who packed any of the products listed on Table II of this Order in the calendar year of 1940 shall report by individual plant (if he operated more than one plant) to the Director of Industry Operations, showing for each such product the number of dozens of each can size packed. If a Canner packed in

[1] See also Conservation Order M-86, *supra.*

1941 any product listed in Table II which was not packed in 1940, he shall report the number of dozens of each can size packed in 1941. The report required by this paragraph shall be submitted in duplicate within thirty days following the effective date of this Order on Form P.D. 342[1] Canneries Production Report (1940–1941).

(c) The report prescribed by paragraph (c) (2) of Order M-86 shall be given on Form P. D. 343.[1] Seasonal Pack Report for 1942.

(d) The notice permitted by paragraph (c) (3) of Order M-86 may be given if any goods set aside in compliance with this Order have not been purchased within sixty days after the mailing or filing of the report with respect to such goods prescribed by paragraph (c) (2) of said Order M-86.

(e) This Order shall take effect immediately, and unless modified, amended or revoked, shall continue in effect until December 31, 1942. (P.D. Reg. 1, amended Dec. 23, 1941, 6 F.R. 6680; W.P.B. Reg. 1, Jan. 26, 1942, 7 F.R. 561, E.O. 9024, Jan. 16, 1942, 7 F.R. 329; E.O. 9040, Jan. 24, 1942, 7 F.R. 527; sec. 2 (a), Pub. Law 671, 76th Cong., 3d Sess., as amended by Pub. Law 89, 77th Cong., 1st Sess.)

Issued this 13th day of March 1942.

J. S. KNOWLSON,
Director of Industry Operations.

[1] Filed with the original document.

SUPPLEMENTARY ORDER NO. M-86-A

CANNED FRUITS AND VEGETABLES

TABLE I—*Primary Products*

The quota of any product listed in Column A to be set aside by any Canner for the Government will be equal to the percentage shown in Column B applied to his total 1942 Pack of that product.

A	B	C	D	E	F	G
Canned fruits and vegetables	Percentage of 1942 pack	Description	Can sizes preferred in order listed	Grade: First preference	Grade: Second preference	Grade: Third preference
Fruit Cocktail	23		10-2½-2	Choice	Fancy.	
Peaches[2]	32	Clings—Freestone, Halves—Sliced.	10-2½-2	Choice	Std. Clings only.	Fancy.
Pears	31	Bartlett halves	10-2½-2	Choice	Top Std.[1]	Standard.
Asparagus	30	Culturally bleached, All Green.	10-2	Fancy cut	Fancy spear.	
Beans, Lima	25	Fresh	10-2	Ext. Std	Fancy green	Std. fresh white.
Beans, String	28	Cut—Green, Wax, Round, Flat.	10-2	Ext. Std	Top Std.[1]	Fancy.
Corn, Sweet	23	Yellow, White. Cream style, whole kernel.	#2 Cream style & whole kernel, #10 whole kernel only.	Ext Std	Fancy	Standard.
Peas	26	Alaska's 3 & 4 sieve, Sweets—3 & larger, ungraded.	10-2	Ext Std	Standard	Fancy.
Tomatoes	33		10-2½-2	Ext Std	Standard	Fancy.
Tomato Catsup	23		10-14 oz. Glass & larger.	Fancy 25% solids.	Standard.	
Tomato Juice	15		10-3 cyl. (404 x 700).	Fancy.		

[1] Top Standard means 70-74 inclusive as defined in terms of U. S. Grades.
[2] Except Freestone Peaches packed in California. (See Table II.)

SUPPLEMENTARY ORDER NO. M-86-A

CANNED FRUITS AND VEGETABLES

TABLE II—*Secondary products*

The use of Tinplate in packing these products is restricted by Tinplate Conservation Order M-81. The quota to be set aside for the Government will be equal to the percentage shown in Column B applied to the restricted production permitted by Order M-81 and such quotas may be packed in addition to the Pack limitation set by said Order M-81.

A	B	C	D	E	F	G
Canned fruits and vegetables	Percentage as defined above	Description	Can sizes preferred in order listed	Grade: First preference	Grade: Second preference	Grade: Third preference
Apples	58	Heavy Pack	10	Standard.		
Applesauce	32	Fresh	10-2	Fancy	Standard.	
Apricots	50	Halves unpeeled	10-2½	Choice	Top Std.[1]	Fancy.
Cherries, RSP	21	Red Pitted (water pack)	10-2	Standard.		
Cherries, Sweet	34	Light Unpitted	10-2½-2	Choice	Top Std.[1]	Fancy.
Peaches	26	Freestone (Calif. only) halves—sliced.	10-2½-2	Choice	Fancy.	
Pineapple	26	Sliced—Crushed	10-2½-2	Fancy	Standard.	
Prunes, Fresh	25	Italian	10-2½	Choice	Fancy.	
Beets	60	Cut-Quartered-Sliced-(Diced)	10-2½-2	Fancy	Top Std.[2]	
Carrots	100	Diced	10-2½-2	Fancy	Top Std.[2]	
Pumpkin	65		2½	Fancy	Top Std.[2]	
Spinach	58		10-2½-2	Fancy	Top Std.[2]	

[1] Top Standard means 70-74 inclusive as defined in terms of U. S. Grades.
[2] Top Standard means 80-84 inclusive as defined in terms of U. S. Grades.

[F. R. Doc. 42-2191; Filed, March 13, 1942; 11:56 a. m.]

CHAPTER XI—OFFICE OF PRICE ADMINISTRATION

ORDER REVOKING AFFIRMATIONS OF COMPLIANCE IN CERTAIN REVISED PRICE SCHEDULES

A statement of the considerations involved in the issuance of this Order has been prepared and is issued simultaneously herewith.[1]

Under the authority vested in the Price Administrator by the Emergency Price Control Act of 1942, including section 201 (d) thereof, it is hereby ordered that the following sections or portions thereof be revoked:

Section:	Revised Price Schedule No.
1307.6	7
1314.7, first paragraph thereof	9
1316.8	11
1339.6	18
1335.55	21
1337.17	23
1342.5	24
1335.154	28
1347.5	30
1335.205	31
1347.56	32
1307.55	33
1335.255	34
1335.305	36
1335.355	37
1335.405	38
1325.56	39
1335.455	42
1347.105	47
1330.56	55
1315.56	56
1352.8	57
1354.5	58
1353.6	59
1314.56	61
1356.8	64
1301.55	67
1335.505	68
1355.59	70
1362.5	75
1345.55	77
1336.57	83
1336.106	84
1315.1255	87
1316.106	89

(Pub. Law 421, 77th Cong., 2nd Sess.)

This order shall become effective March 13, 1942. Issued this 12th day of March 1942.

JOHN E. HAMM,
Acting Administrator.

[F. R. Doc. 42-2160; Filed, March 12, 1942; 5:05 p. m.]

PART 1303—ZINC

AMENDMENT NO 1 TO REVISED PRICE SCHEDULE NO. 81[2]—PRIMARY SLAB ZINC

A statement of the considerations involved in the issuance of this amendment has been prepared and is issued simultaneously herewith.[1]

Sections 1303.53, 1303.54, 1303.57 (a), and 1303.59 (e) are amended to read as follows and a new § 1303.58a is added:

§ 1303.53 *Evasion.* (a) The price limitations set forth in Price Schedule No. 81 shall not be evaded whether by direct or indirect methods in connection with a purchase, sale, delivery or transfer of primary slab zinc, alone or in conjunction

[1] The statement of considerations has been filed with the Division of the Federal Register.
[2] 7 F.R. 1356.

with any other material, or by way of any commission, service, transportation, or other charge, or discount, premium, or other privilege, or by toll agreement, or by tying-agreement, or other trade understanding, or otherwise.

(b) Any purchase, sale, delivery or transfer of primary slab zinc in quantities less than requested by the buyer in order to enable the seller to obtain a higher less-than-carload-lot differential shall be considered to be an evasion of Price Schedule No. 81: *Provided,* That the buyer is willing to accept delivery of the requested quantity in a single shipment.

§ 1303.54 *Records and reports.* (a) Every person making purchases or sales of primary slab zinc after January 28, 1942, shall keep for inspection by the Office of Price Administration for a period of not less than one year, complete and accurate records of (1) each such purchase or sale showing the date thereof, the name and address of the buyer and the seller, the price paid or received, and the quantity in pounds or tons of each kind or grade purchased or sold; and (2) the quantity in pounds or tons of primary slab zinc (i) on hand, and (ii) on order, as of the close of each calendar month.

(b) Every smelter processing or treating on toll, by a process of distillation or by electrolysis, to obtain slab zinc therefrom, any zinc ores, concentrates or other primary material in accordance with the terms of an agreement or transaction entered into before March 13, 1942, shall file with the Office of Price Administration on or before April 1, 1942, full details of such agreement or transaction, including a copy thereof. Every smelter entering into such an agreement or transaction on or after March 13, 1942, shall, within 5 days thereafter file with the Office of Price Administration full details of such agreement or transaction, including a copy thereof.

(c) Every smelter who has prior to March 13, 1942, entered into an agreement or transaction to sell, deliver, or transfer primary slab zinc made to specifications other than those set forth in § 1303.59, paragraph (e), below, at the request of any customer, which is not yet completed on that date, shall file with the Office of Price Administration on or before April 1, 1942, full details of such agreement or transaction including a copy thereof, the name and address of the buyer, the required specification, the quantity in pounds or tons required, the price in cents per pound, and the delivery terms established by such agreement or transaction. Every smelter entering into such an agreement or transaction on or after March 13, 1942, shall file with the Office of Price Administration within 5 days thereafter full details of such agreement or transaction including a copy thereof, the name and address of the buyer, the required specification, the quantity in pounds or tons required, the price in cents per pound, and the delivery terms established by such agreement or transaction.

(d) Persons affected by Price Schedule No. 81 shall submit such reports to the Office of Price Administration as it may, from time to time, require.

§ 1303.57 *Definitions.*

* * * * *

(a) "On toll" means under an arrangement whereby a servicing charge is paid in any manner for processing or servicing ore or other material containing zinc;

* * * * *

§ 1303.59 *Appendix A: Maximum prices for primary slab zinc.*

* * * * *

(e) *Specifications.* The grades of slab zinc specifically referred to above shall conform to the following chemical requirements:

Maximum Impurities—Percent

Grade	Lead	Iron	Cadmium	Aluminum	Total not over
Special high grade	0.007	0.005	0.005	None	0.010
High grade	.07	.02	.07	None	.10
Intermediate	.20	.03	.50	None	.50
Brass special	.60	.03	.50	None	1.00
Selected	.80	.04	.75	None	1.25
Prime western	1.60	.08	------	------	------

Primary slab zinc which fails to meet the standards of any grade set forth above shall be sold below the maximum price for such grade as herein established: *Provided, however,* That primary slab zinc made to conform to specifications other than those set forth above, required by any customer may be sold by the producer thereof to such customer at prices in excess of the maximum prices herein established provided said manufacturer has first fulfilled the reporting requirements set forth in § 1303.54 (c) hereof.

§ 1303.58a *Effective dates of amendments.* (a) Amendment No. 1 (§§ 1303.53, 1303.54, 1303.57 (a), 1303.58a, and 1303.59) to Revised Price Schedule No. 81 shall become effective March 13, 1942. (Pub. Law 421, 77th Cong., 2d Sess.)

Issued this 12th day of March, 1942.

JOHN E. HAMM,
Acting Administrator.

[F. R. Doc. 42-2167; Filed, March 12, 1942; 5:03 p. m.]

PART 1306—IRON AND STEEL

AMENDMENT NO. 1 TO REVISED PRICE SCHEDULE NO. 41 [1]—STEEL CASTINGS

A statement of the considerations involved in the issuance of this amendment has been prepared and is issued simultaneously herewith.[2]

The first paragraph and Table III of this § 1306.113 are hereby amended and a new § 1306.110a is added to read as set forth below:

§ 1306.113 *Appendix B: Maximum prices for railroad specialties.* (a) The maximum prices, including extras except as hereinafter provided, for railroad specialties shall be as set forth in Tables I, II, III and IV of this Appendix: *Provided,* That (1) An additional charge may be made by any producer for any extras furnished by such producer in cases where such extras were customarily charged by railroad specialty producers between October 1 and October 15, 1941, and the maximum amount of any additional charge for any such extra shall be the amount which was customarily charged by railroad specialty producers for the same extra between October 1 and October 15, 1941.

(2) An additional charge may be made by any producer for pattern costs for side-frames and bolsters where such pattern costs were customarily charged by such producer between October 1 and October 15, 1941, and the maximum amount of any additional charge for such pattern costs shall be the amount which customarily was or would have been charged by such producer for the same or similar pattern costs between October 1 and October 15, 1941.

(3) The maximum prices for coupler repair parts furnished by any producer shall be the prices which railroad specialty producers customarily charged therefor between October 1 and October 15, 1941.

(4) Where deliveries are made outside of base territory, there may be added charges for freight prevailing at time of delivery with the customary differential allowed to the purchaser, computed by methods used by the producer on October 1, 1941.

* * * * *

[1] 7 F.R. 1281.

[2] The statement of consideration has been filed with the Division of the Federal Register.

TABLE III—*Couplers*

(1) Furnished in Grade "B" Steel

A. A. R. STANDARD AND ALTERNATE STANDARD COUPLERS AND ATTACHMENTS

A. A. R. Type "E" top or rotary operating couplers, 12" heads, with shanks not more than 21¼" long, fitted with 11" knuckles:	
5 in. x 7 in. shanks, with 6¼ in. butt ends	$55.75 per pair.
5 in. x 7 in. shanks, with 9⅛ in. butt ends	$57.05 per pair.
6¼ in. x 8 in. shanks, with 6¼ in. butt ends	$60.50 per pair.
6¼ in x 8 in. swiveling shanks, without butts, pins and cotters	$60.50 per pair.
Locomotive or Special Tender designs with shanks not over 21¼ in. long	$34.25 each.
Other special tender designs with unusual style shanks not over 21¼ in. long	$.0845 per lb.
Passenger Coupler designs	$.0845 per lb.
A. A. R. Alternate Standard Swivel Butts, complete with pins, pin retainers and cotters, when furnished for assembly with couplers having swiveling shanks:	
In lots of 1 to 99 pcs. incl	$17.50 per pair.
In lots of 100 to 199 pcs. incl	$16.50 per pair.
In lots of 200 pieces or more	$15.50 per pair.
A. A. R. Alternate Standard Swivel Yokes, complete with pins and cotters, when furnished for assembly with couplers having swiveling shanks:	
In lots of 1 to 99 pcs. incl	$37.50 per pair.
In lots of 100 to 199 pcs. incl	$36.40 per pair.
In lots of 200 or more pieces	$34.90 per pair.

TABLE III—*Couplers*—Continued

FORMER M. C. B. COUPLERS

M. C. B. top operating freight, locomotive, or special tender couplers, 9¼ in. head, with shanks not over 21¼ in. long fitted with 9 in. or 11 in. knuckles	$25.50 each.
M. C. B. top, side, or bottom operating passenger couplers, not over 48 in. long from pulling face of knuckle to butt end, fitted with 9 in. knuckles, but not including the furnishing or application of wrought iron or steel straps, or separate wearing plates	$30.00 each.
Coupler Pockets complete, for use with locomotive coupler designs	$.105 per lb.

SPECIAL M. C. B. COUPLERS NOS. 1 AND 2 COMPLETE COUPLERS

	Price each
Special M. C. B. No. 1 Top Operating Couplers with shanks not over 21¼" long and fitted with 9" knuckles:	
5 x 5" shanks, 6½" butt ends	$25.50
5 x 7" shanks, 6½" butt ends	25.50
Engine, Short Shanks	25.50
Special M. C. B. No. 2 Top Operating Couplers, with shanks not over 21¼" long and fitted with 9" knuckles:	
5 x 5" shanks, 6½" butt ends	24.00
5 x 7" shanks, 6½" butt ends	24.00
Engine, Short Shanks	24.00

SPECIAL DESIGNS

	Drawing	Price each
Special M. C. B. No. 2 Coupler	Type "J"	$26.50
Special M. C. B. No. 2 Coupler	Type "H"	32.50
Special M. C. B. No. 2 Coupler	Type "M"	32.50
Special M. C. B. No. 2 Coupler	Type "T"	25.50
Special M. C. B. No. 1 Coupler	Type "S"	28.50

Special M. C. B. No. 2 Top Operating Unit Radial Coupler	$28.30
Special M. C. B. No. 2 Rotary Operating Unit Radial Coupler	29.30
Special M. C. B. No. 1 Top Operating Unit Radial Coupler	29.80
Special M. C. B. No. 1 Rotary Operating Unit Radial Coupler	30.80

INCOMPLETE TYPE "E" AND M. C. B. COUPLER AND COUPLER BODY PRICES—TYPE "E"

A. A. R. Standard Type "E" Coupler Bodies Only; Without fittings:	*Per pair*
5 x 7 x 6½"	$42.45
5 x 7 x 9⅛"	43.75
6¼ x 8 x 6¼", Rigid Shank	47.20
6¼ x 8 x 6¼", Swivel Shank	47.20
Locomotive, Short shank	27.60

For determining prices of various other combinations of incomplete Type "E" Couplers, the following amounts for missing parts should be deducted.

	Type "E" freight couplers	Type "E" locomotive couplers
	Per pair	*Each*
Less Knuckles deduct	$8.72	$4.36
Less Lifters do	.92	.46
Less Knuckle Throwers do	.98	.49
Less Locks do	2.14	1.07
Less Knuckle Pins do	.54	.27

M. C. B.

M. C. B. Coupler Bodies Only; without fittings:	*Each*
5 x 5 x 6½"	$20.60
5 x 7 x 6½"	20.60

For determining prices of various other combinations of incomplete M. C. B. Couplers, the following amounts for missing parts should be deducted.

	M. C. B. couplers (each)
Less Knuckles deduct	$3.05
Less Lifters do	.90
Less Locks do	.68
Less Knuckle Pins do	.27

FRACTIONAL SIZE COUPLERS

¾ Size top operating freight or tender couplers without uncoupling chains, price	$19.50 each.
¾ Size bottom or side operating freight or tender couplers, without uncoupling chains, price	$21.00 each.
¾ Size top, side, or bottom operating passenger couplers, without uncoupling chains, price	$23.25 each.
½ Size top operating freight or tender couplers, without uncoupling chains, price	$13.00 each.
½ Size coupler pockets, price	$0.205 per lb.

(2) Furnished in High Tensile Steel

A. A. R. STANDARD AND ALTERNATE STANDARD COUPLERS AND ATTACHMENTS

A. A. R. Type "E" top or rotary operating couplers, 12" heads with shanks not more than 21¼" long, fitted with 11" knuckles:	
6¼" x 8" shanks with 6¼" butt ends	$67.25 per pr.
6¼" x 8" swiveling shanks, without butts, pins, and cotters	$67.25 per pr.
A. A. R. Alternate Standard Swivel Butts, complete with pins, pin retainers and cotters, when furnished for assembly with couplers having swiveling shanks:	
In lots of 1 to 99 pcs. incl	$19.65 per pr.
In lots of 100 to 199 pcs. incl	$18.40 per pr.
In lots of 200 pieces or more	$17.15 per pr.
A. A. R. Alternate Standard Swivel Yokes, complete with pins and cotters, when furnished for assembly with couplers having swiveling shanks:	
In lots of 1 to 99 pcs. incl	$42.15 per pr.
In lots of 100 to 199 pcs. incl	$40.25 per pr.
In lots of 200 pieces or more	$38.40 per pr.
A. A. R. Standard Tight Lock Coupler Complete T-80	$111.25 each.
A. A. R. Standard Tight Lock Coupler Yoke, Y-50, complete with Radial connection, Radial seat and pins	$112.50 each.
Type "E" Controlled Slack Coupler, Complete:	
C. S. C.-1	$62.30 each.
C. S. C.-2	$92.80 each.
C. S. C.-3	$94.60 each.
C. S. C.-4	$71.05 each.
C. S. C.-5	$78.65 each.

* * * * *

§ 1306.110a *Effective date of amendments.* (a) Amendment No. 1 (§§ 1306.110a and 1306.113) to Revised Price Schedule No. 41 shall become effective March 16, 1942. (Pub. Law 421, 77th Cong., 2d sess.)

Issued this 12th day of March 1942.

JOHN HAMM,
Acting Administrator.

[F. R. Doc. 42-2158; Filed, March 12, 1942; 5:03 p. m.]

PART 1398—OFFICE AND STORE MACHINES

TEMPORARY MAXIMUM PRICE REGULATION NO. 9—USED TYPEWRITERS

In the judgment of the Price Administrator it is necessary and proper in order to effectuate the purposes of the Emergency Price Control Act of 1942 to establish temporarily as the maximum prices for used typewriters the prices prevailing with respect thereto within five days prior to the issuance of this Regulation.

Therefore, under the authority vested in me by the Emergency Price Control Act of 1942, and in accordance with Procedural Regulation No. 1,[1] issued by the Office of Price Administration, Temporary Maximum Price Regulation No. 9 is hereby issued:

§ 1398.51 *Maximum prices for sale or rental of used typewriters.* (a) On and after March 13, 1942, to and including May 11, 1942, regardless of any contract, agreement, lease, or other obligation, no person shall sell or deliver used typewriters, and no person shall buy or receive used typewriters in the course of trade or business at prices higher than the maximum prices established herein; and no person shall agree, offer, solicit or attempt to do any of the foregoing. The provisions of this Section shall not be applicable to sales or deliveries of used typewriters to a purchaser if, prior to March 6, 1942, such typewriters had been received by a carrier, other than a carrier owned or controlled by the seller, for shipment to such purchaser.

(b) The maximum price for any used typewriters shall be the highest price, exclusive of federal excise tax, for a typewriter of the same make, model, manufacturer's trade-in allowance category ("serial number break"), and condition, quoted or otherwise in effect on March 5, 1942, for a purchaser of the same general class, from the manufacturer, wholesaler, distributor, dealer, or other seller.

(c) The maximum price for the rental or use of any used typewriter shall be the highest price for a typewriter of the same make, model, manufacturer's trade-in allowance category ("serial number break"), and condition, quoted or otherwise in effect on March 5, 1942, for a rental to a person of the same general class, for the same term or period.*

*§§ 1398.51 to 1398.60, inclusive, issued under the authority contained in Pub. Law 421, 77th Cong. 2d Sess.

§ 1398.52 *Less than maximum prices.* Lower prices than those set forth in this Temporary Maximum Price Regulation No. 9 may be charged, demanded, paid, or offered.*

§ 1398.53 *Notices to be posted.* Every retail dealer in used typewriters shall post in a conspicuous place on his premises where used typewriters are offered for sale or lease, a notice which shall set forth in legible fashion, and in their entirety, §§ 1398.51, 1398.52, and 1398.55 of this Temporary Maximum Price Regulation No. 9, with a scale of rental prices.*

§ 1398.54 *Conditional agreements.* No seller of used typewriters shall enter into an agreement permitting the adjustment of the prices to prices which may be higher than the maximum prices provided herein, in the event that this Temporary Maximum Price Regulation No. 9 is amended or is determined by a court to be invalid or upon any other contingency: *Provided,* That if a petition for amendment (or for adjustment or for exception under § 1398.58) has been duly filed, and such petition requires extensive consideration, and the Administrator determines that an exception would be in

[1] 7 F.R. 971

the public interest pending such consideration, the Administrator may grant an exception from the provisions of this section permitting the making of contracts adjustable upon the granting of the petition for amendment (or for adjustment or exception, as the case may be). Requests for such an exception may be included in the aforesaid petition for amendment (or for adjustment or for exception under § 1398.58).*

§ 1398.55 *Evasion.* (a) The price limitations set forth in this Temporary Maximum Price Regulation No. 9 shall not be evaded, whether by direct or indirect methods, in connection with an offer, solicitation, agreement, sale, delivery, purchase or receipt of or relating to used typewriters, alone or in conjunction with any other commodity or by way of commission, service, transportation, or other charge, or discount, premium or other privilege, or by tying-agreement or other trade understanding, or otherwise.

(b) Specifically, but not exclusively, the following practices are prohibited:

(1) Decreasing cash discounts, trade-in or exchange allowances, rental credits on purchases, quantity purchase discounts, or allowances for or absorption of transportation costs, in effect on March 5, 1942.

(2) Increasing charges, in effect on March 5, 1942, for deferred payment, or for any other form of installment, or time payment or credit accounts.

(3) Increasing charges, in effect on March 5, 1942, for maintenance or repair service, or for shop overhauls.

(4) Decreasing the effective period of guarantee or warranty of performance, or of maintenance or repair service.

(5) Representing typewriters in "rough" or "as is" condition as reconditioned or rebuilt, or reconditioned typewriters as rebuilt, or rebuilt typewriters as new.*

§ 1398.56 *Records and reports.* (a) Every person making sales or rentals of used typewriters after March 13, 1942, shall keep for inspection by the Office of Price Administration for a period of not less than one year, a complete and accurate record of each such sale, or rental, showing the date thereof, the name and address of the buyer or lessee, the make, the model, serial number, or other designation and the price received for each used typewriter, the discounts and trade-in allowances given, and the model, serial number, or other designation of each typewriter traded in.

(b) Persons affected by this Temporary Maximum Price Regulation No. 9 shall submit such reports to the Office of Price Administration as it may, from time to time, require.*

§ 1398.57 *Enforcement.* (a) Persons violating any provision of this Temporary Maximum Price Regulation No. 9 are subject to the criminal penalties, civil enforcement actions, and suits for treble damages provided for by the Emergency Price Control Act of 1942.

(b) Persons who have evidence of any violation of this Temporary Maximum Price Regulation No. 9 or any price schedule, regulation or order issued by the Office of Price Administration or of any acts or practices which constitute such a violation are urged to communicate with the nearest field or regional office of the Office of Price Administration or its principal office in Washington, D. C.*

§ 1398.58 *Petitions for amendment.* Persons seeking any modification of this Temporary Maximum Price Regulation No. 9 or an adjustment or exception not provided for therein may file petitions for amendment in accordance with the provisions of Procedural Regulation No. 1, issued by the Office of Price Administration.*

§ 1398.59 *Definitions.* (a) When used in this Temporary Maximum Price Regulation No. 9, the term:

(1) "Person" includes an individual, corporation, partnership, association, or any other organized group of persons or legal successor or representative of any of the foregoing and includes the United States or any agency thereof, or any other government, or any of its political subdivisions, or any agency of any of the foregoing;

(2) "Typewriter" means any portable, office, commercial, noiseless or standard type of manually or electrically operating writing machine designed to be used for writing or copying letters or other documents, and does not include telegraphic typewriters, Linotype machines, Monotype machines, or Braille machines;

(3) "Used typewriter" includes any typewriter which has, at any time, been delivered to any person who acquired it for use;

(4) "Rebuilt typewriter" means any used typewriter which, in the process of rebuilding for delivery to the purchaser as a rebuilt typewriter, has been dismantled, cleaned, realigned, adjusted, and reassembled, its main frame completely refinished, and imperfect type and worn parts replaced by new type and parts;

(5) "Reconditioned typewriter" means any used typewriter which, in the process of reconditioning for delivery to the purchaser as a reconditioned typewriter, has been cleaned, realigned, adjusted, and its imperfect type and worn parts replaced;

(6) "Rough" or "as is" means any used typewriter which, at the time of delivery to the purchaser, is not in rebuilt or reconditioned condition;

(b) Unless the context otherwise requires, the definitions set forth in section 302 of the Emergency Price Control Act of 1942, shall apply to other terms used herein.*

§ 1398.60 *Effective date.* This Temporary Maximum Price Regulation No. 9 (§§ 1398.51 to 1398.60, inclusive) shall become effective March 13, 1942.*

Issued this 12th day of March, 1942.

JOHN E. HAMM,
Acting Administrator.

[F. R. Doc. 42-2162; Filed, March 13, 1942; 9:14 a. m.]

PART 1398—OFFICE AND STORE MACHINES

RATIONING ORDER NO. 4—USED TYPEWRITERS

Pursuant to the authority vested in me by Directive No. 1 issued by the Chairman of the War Production Board on January 24, 1942, and by Supplementary Directive No. 1D issued by the Chairman of the War Production Board on March 5, 1942, it is hereby ordered that:

§ 1398.101 *Restriction of sales and deliveries of used typewriters.* On and after the effective date of this Rationing Order No. 4, regardless of any contract of sale, contract to sell, agreement, lease or other obligation, no person shall sell or deliver used typewriters, and no person shall buy or receive used typewriters, except as provided in §§ 1398.102, 1398.103 and 1398.104.*

*§§ 1398.101 to 1398.109, inclusive, issued under the authority contained in E.O. Nos. 8734, 8875, 6 F.R. 1917, 4483, War Production Board Directive No. 1 and Supplementary Directive No. 1D, 7 F.R. 562, 7 F.R. 1792.

§ 1398.102 *Persons eligible to buy used typewriters*—(a) *Without application.* Effective March 13, 1942, the following persons shall be eligible to buy or receive used typewriters without making application to a Local Rationing Board:

(1) Consignees of shipments of typewriters: *Provided,* That such typewriters were in transit on a carrier, other than a carrier owned or controlled by the consignor, on March 6, 1942.

(2) Manufacturers of typewriters at their places of business in the United States.

(3) Wholesalers or dealers in typewriters.

(4) Persons regularly engaged in the business of repairing, reconditioning, or rebuilding used typewriters.

(5) Persons who have delivered used typewriters to others for repair, reconditioning, or rebuilding and are entitled to the return thereof.

(6) Persons entitled by distraint, levy, execution, attachment, or by similar forms of judicial process, including foreclosure or repossession by virtue of bona fide lien, created prior to March 6, 1942, to acquire used typewriters.

(7) Persons entitled to acquire used typewriters by will or by intestacy.

(8) Trustees or receivers in bankruptcy, insolvency, or receivership, in cases where their trusteeship or receivership extends to used typewriters.

(9) Any person acquiring a used typewriter for business purposes from a person who, at the time of delivery of such typewriter, shall own or possess not more than the one typewriter.

(b) *With application.* On and after April 13, 1942, the following persons shall be eligible to buy or receive used typewriters in exchange for a certified application pursuant to § 1398.104.

(1) Prime contractors with any agency of the government of the United States for the construction of a military or naval cantonment, shipyard, or air base: *Provided,* That such persons shall establish, in a statement as provided in § 1398.104, immediate need for such typewriters in connection with the construc-

tion of such cantonment, shipyard, or air base. Immediate need is not shown by an applicant if upon the acquisition of the typewriter or typewriters applied for, he will have in his possession any typewriter which is not in use, unless such typewriter not in use is unserviceable and cannot be made serviceable by reasonable repairs.

(2) Persons who are engaged in the operation of a plant, factory, or shipyard, 70% of whose combined billings and accepted but unbilled orders (whether or not production has commenced pursuant to such orders), during the three-month period preceding the month in which the application is filed, consisted of billings and accepted but unbilled orders for ships, planes, tanks, guns, ammunition, powder, fire control apparatus, military or naval optical or communications equipment, armor plate, radiosondes, machine tools, lift trucks, welding machines, foundry equipment, cranes, metal working equipment, heat treating furnaces, or tackle blocks: *Provided,* That such persons shall establish, in a statement as provided in §1398.104, immediate need for such typewriters for the efficient conduct of their business. Immediate need is not shown by an applicant if upon the acquisition of the typewriter or typewriters applied for, he will have in his possession any typewriter which is not in use, unless such typewriter not in use is unserviceable and cannot be made serviceable by reasonable repairs.*

§ 1398.103 *Rental of used typewriters.* (a) Effective March 13, 1942, all persons shall be eligible to rent used typewriters.

(b) Regardless of any agreement, lease or other obligation heretofore or hereafter entered into, all rentals, leasings, bailments, licenses, hirings, or loans of used typewriters shall be deemed subject to revocation or cancellation by lessors, bailors, licensors, or lenders, as the case may be, upon the issuance by the Office of Price Administration of Orders, Regulations, or Amendments requiring the recapture, repossession, or return of such used typewriters. Upon the issuance by the Office of Price Administration of any such Orders, Regulations, or Amendments, all persons in possession of such used typewriters shall return, deliver, or surrender such typewriters to their lessors, bailors, licensors, or lenders, as the case may be, at the time and in the manner provided for in such Orders or Regulations.

(c) *Rental-credit provisions and options to purchase.* Any rental-credit provision (or other provision for crediting rentals paid toward the purchase price of a rented typewriter) or option to purchase contained in an agreement for the rental of a used typewriter made prior to March 6, 1942, which rental-credit provision or option was not prior to March 6, 1942 invoked or exercised by the lessee, shall be enforceable only upon presentation of a certified application pursuant to §§ 1398.102 and 1398.104.

(d) *Bailment-leases.* A bailee-lessee under a bailment-lease agreement for the instalment purchase of a used typewriter may complete the purchase provided the agreement therefor was executed prior to March 6, 1942.*

§ 1398.104 *Procedure for buying used typewriters*—(a) *Application.* Any person who believes that he is eligible to buy a used typewriter or typewriters in accordance with the provisions of paragraphs (b) (1) and (b) (2) of § 1398.102 shall make to the Local Rationing Board of the Office of Price Administration having jurisdiction over the area in which the typewriter is to be used, an application in triplicate on Form R-401 to be provided by the Local Rationing Board.

(b) *Certification of application.* The Local Rationing Board, if it is satisfied that the applicant has properly executed his application, that the facts stated in the application are true, and that the applicant has satisfied all the applicable requirements of this Order, shall certify on the application its approval thereof and specify the number of used typewriters to which the applicant is eligible. The Local Rationing Board shall retain one copy of the application and deliver the remaining two copies to the applicant for presentation to the seller.

(c) *Delivery.* The seller, if he knows nothing inconsistent with the facts set forth in an application on Form R-401, approved by a Local Rationing Board, may deliver the typewriter or typewriters specified in the Board's certification to the applicant, after executing the statement required of him on Form R-401, forwarding one copy to the Local Rationing Board as provided in § 1398.106 and retaining the other. If the seller knows any facts to be inconsistent with those set forth in the application, he shall retain the application, refuse to make the sale, and notify the Local Rationing Board thereof.*

§ 1398.105 *Records.* Every typewriter manufacturer, wholesaler, and dealer shall preserve for not less than two years, accurate and complete records concerning inventories and sales or rentals of used typewriters (including, specifically, the use to which a rented typewriter is to be put) and such copies of forms as are required to be retained by them by the terms of this Rationing Order No. 4.*

§ 1398.106 *Reports.* (a) On or before April 6, 1942, every typewriter manufacturer, wholesaler, and dealer shall file with the Local Rationing Board, on a Form to be provided by the Board, an inventory report containing the information required by such Form.

(b) Persons affected by this Rationing Order No. 4 shall submit such other reports to the Office of Price Administration as it may, from time to time, require.*

§ 1398.107 *Violations.* (a) Any person who violates any provision of this Rationing Order No. 4 who, by any act or omission, knowingly falsifies a statement or any record which he is required to keep by the terms of this Rationing Order No. 4 or who otherwise knowingly furnished false information to the Office of Price Administration, shall be subject to the penalties therefor, including a recommendation to the Attorney General for prosecution pursuant to section 35 (A) of the Criminal Code (Title 18, U.S.C. sec. 80).

(b) In addition, the Office of Price Administration may deny him the right to receive any used typewriter or any other commodity subject to rationing by the Office of Price Administration, and may recommend to the War Production Board that he be denied the right to receive any other materials which are now or in the future may be allocated by that Board.*

§ 1398.108 *Definitions.* When used in this Rationing Order No. 4, the term:

(a) "Person" includes an individual, corporation, partnership, association, or any other organized group of persons, or legal successor or representative of any of the foregoing, and includes the United States or any agency thereof, or any other government, or any of its political subdivisions, or any agency of any of the foregoing;

(b) "Typewriter" means any portable, standard, or noiseless type of mechanically or electrically operated writing machine used for writing or copying letters or other documents, and does not include telegraphic typewriter, linotype machines, monotype machines, or Braille machines;

(c) "Manufacturer" means any person operating a factory or plant which manufactures or assembles typewriters;

(d) "Wholesaler" means any person regularly engaged in the business of selling typewriters to manufacturers or other wholesalers or dealers;

(e) "Dealer" means any person regularly engaged in the business of selling or renting typewriters to the ultimate user;

(f) "Used" means any typewriter which at any time has been delivered to any person who has acquired it for use, and includes repaired, rebuilt, and reconditioned typewriters.*

§ 1398.109 *Effective date of this Rationing Order No. 4.* This Rationing Order No. 4 (§§ 1398.101 to 1398.109, inclusive) shall take effect March 13, 1942.

Issued this 12th day of March 1942.

JOHN E. HAMM,
Acting Administrator.

[F. R. Doc. 42-2161; Filed, March 13, 1942; 9:14 a. m.]

PART 1400—TEXTILE FABRICS: COTTON, WOOL, SILK, SYNTHETICS AND ADMIXTURES

TEMPORARY MAXIMUM PRICE REGULATION NO. 10—FINISHED PIECE GOODS MADE OF COTTON, RAYON AND MIXTURES THEREOF

In the judgment of the Price Administrator it is necessary and proper in order to effectuate the purposes of the Emergency Price Control Act of 1942 to establish temporarily as the maximum prices for finished piece goods made of cotton or rayon or mixtures thereof (referred to herein as "finished piece goods") the prices prevailing with respect thereto within five days prior to the issuance of this Regulation.

Therefore, under the authority vested in the Price Administrator by the Emer-

gency Price Control Act of 1942, and in accordance with Procedural Regulation No. 1,[1] issued by the Office of Price Administration, Temporary Maximum Price Regulation No. 10 is hereby issued.

§ 1400.1 *Maximum prices for finished piece goods.* (a) From March 13, 1942, to May 11, 1942, inclusive, regardless of any contract, agreement, lease, or other obligation, no person shall sell or deliver any finished piece goods and no person shall buy or receive finished piece goods at a price higher than the maximum price therefor; and no person shall offer, solicit or attempt to do any of the foregoing. The provisions of this Section shall not be applicable to sales or deliveries of finished piece goods to a purchaser if prior to March 13, 1942, such goods had been received by a carrier, other than a carrier owned or controlled by the seller, for shipment to such purchaser.

(b) (1) The maximum price shall be the highest net price for finished piece goods of the same kind, type, quality, and finish which was, during the period between March 7, 1942 and March 11, 1942, inclusive, sold, contracted to be sold, delivered or transferred by the seller to a purchaser of the same general class.

(2) If the maximum price cannot be determined under subparagraph (1), the maximum price shall be the highest net price of the seller in effect for sales of finished piece goods of the same kind, type, quality and finish to a purchaser of the same general class during the period between March 7, 1942, and March 11, 1942, inclusive, or in case the seller had no net price in effect during that period, the net price of the seller in effect on the nearest preceding date.

(3) If the maximum price cannot be determined under either subparagraph (1) or (2), the maximum price shall be a price in line with the maximum price, as determined by subparagraph (2), of the most nearly comparable finished piece goods offered for sale by the seller prior to March 7, 1942.*

*§§ 1400.1 to 1400.12, inclusive, issued under the authority contained in Pub. Law 421, 77th Cong., 2d Sess.

§ 1400.2 *Conditional agreements.* No seller of finished piece goods shall enter into an agreement permitting the adjustment of the prices to prices which may be higher than the maximum prices provided by § 1400.1, in the event that this Temporary Maximum Price Regulation No. 10 is amended or is determined by a court to be invalid or upon any other contingency: *Provided,* That if a petition for amendment has been duly filed, and such petition requires extensive consideration, and the Administrator determines that an exception would be in the public interest, pending such consideration, the Administrator may grant an exception from the provisions of this Section permitting the making of contracts adjustable upon the granting of the petition for amendment. Requests for such an exception may be included in the aforesaid petition for amendment.*

[1] 7 F.R. 971.

§ 1400.3 *Exempt sales.* The provisions of this Temporary Maximum Price Regulation No. 10 shall not apply to (a) sales at retail; and (b) sales of oil cloth, lace fabrics, belting, or artificial leather or other pyroxylin coated fabrics.*

§ 1400.4 *Upholstery furniture fabrics and bed linens.* The provisions of this Temporary Maximum Price Regulation No. 10 shall not apply to sales of upholstery furniture fabrics for which maximum prices are established by Revised Price Schedule No. 39[2] or to sales of bed linens for which maximum prices are established by Revised Price Schedule No. 89.[3]*

§1400.5 *Less than maximum prices.* Lower prices than those set forth in § 1400.1 may be charged, demanded, paid, or offered.*

§ 1400.6 *Evasion.* The price limitations set forth in this Temporary Maximum Price Regulation No. 10 shall not be evaded, whether by direct or indirect methods, in connection with an offer, solicitation, agreement, sale, delivery, purchase or receipt of or relating to finished piece goods, alone or in conjunction with any other commodity or by way of any commission, service, transportation, or other charge, or discount, premium, or other privilege, or by tying-agreement or other trade understanding, or otherwise.*

§ 1400.7 *Records and reports.* Every person making sales of finished piece goods from March 13, 1942, to May 11, 1942, inclusive, shall keep for inspection by the Office of Price Administration for a period of not less than one year:

(a) Complete and accurate records of each such sale, showing the date thereof, the name and address of the buyer, a full description of the goods sold (with a reference sample of each kind, type, quality and finish), the price per yard received, the quantity sold and discounts and allowances of any nature given.

(b) Complete and accurate records of each sale, contract to sell, delivery or transfer during the period between March 7, 1942 and March 11, 1942, inclusive, showing the date thereof, the name and address of the buyer, a full description of the goods sold, contracted to be sold, delivered or transferred (with a reference sample of each kind, type, quality and finish), the price per yard and the quantity sold, contracted to be sold, delivered or transferred and discounts and allowances of any nature given.

(c) Complete and accurate records of the net prices in effect during the period between March 7, 1942, and March 11, 1942, inclusive, including a full description of the goods (with a reference sample of each kind, type, quality and finish), the price per yard, and discounts and allowances of any nature quoted.

(d) In cases where the maximum price is determined to be the net price in effect on a date preceding March 7, 1942, in accordance with paragraph (b) (2) of § 1400.1, complete and accurate records of the net price in effect on such date, including a full description of the goods (with a reference sample of each kind, type, quality and finish), the price per yard, and discounts and allowances given.

[2] 7 F.R. 1279.
[3] 7 F.R. 1375.

(e) In cases where the maximum price is determined as in line with other prices in accordance with paragraph (b) (3) of § 1400.1 complete and accurate records of the method of determining such maximum price, including a full description (with a reference sample of each kind, type, quality and finish), and the price per yard of the goods with which such maximum price is determined to be in line, and discounts and allowances of any nature given in connection with the sale of such goods.

Such persons shall submit such reports to the Office of Price Administration as it may from time to time require.*

§ 1400.8 *Enforcement.* (a) Persons violating any provision of this Temporary Maximum Price Regulation No. 10 are subject to the criminal penalties, civil enforcement actions, and suits for treble damages provided for by the Emergency Price Control Act of 1942.

(b) Persons who have evidence of any violation of this Temporary Maximum Price Regulation No. 10 or any price schedule, regulation or order issued by the Office of Price Administration or of any acts or practices which constitute such a violation are urged to communicate with the nearest field or regional office of the Office of Price Administration or its principal office in Washington, D. C.*

§ 1400.9 *Petitions for amendment.* Persons seeking any modification of this Temporary Maximum Price Regulation No. 10 or an adjustment or exception not provided for therein may file petitions for amendment in accordance with the provisions of Procedural Regulation No. 1, issued by the Office of Price Administration.*

§ 1400.10 *Definitions.* (a) When used in this Temporary Maximum Price Regulation No. 10, the term:

(1) "Person" means an individual, corporation, partnership, association, or other organized group of persons, or legal successor or representative of any of the foregoing, and includes the United States or any agency thereof, or any other Government, or any of its political subdivisions, or any agency of any of the foregoing;

(2) "Finished piece goods made of cotton or rayon or mixtures thereof" means fabrics, more than 12 inches in width, bleached, dyed, printed, mercerized or otherwise finished or processed and woven from yarn composed, in the amount of ninety per cent. or more by weight, of either cotton fibre or chemically produced yarn or fibre made from cellulose or with a cellulose base, or of any mixtures thereof.

(3) "Net price in effect" means the price quoted in the seller's price list (or, in case there is no such price list, the price regularly quoted by the seller in any other manner) less all discounts and allowances. The term "net price" shall be construed accordingly.

(4) "Sales at retail" means sales to the ultimate consumer: *Provided,* That no commercial user shall be deemed to be an ultimate consumer.

(5) "In line with" means having a justifiable relation to the maximum price with commensurate increases or decreases reflecting actual differences in the width, weight, construction and cost of the grey goods, the kind, type, quality, color and design characteristics and cost of the finish, provision for working allowance and the cost of put-up.

(b) Unless the context otherwise requires, the definitions set forth in section 302 of the Emergency Price Control Act of 1942 shall apply to other terms used herein.*

§ 1400.11 *Replacement of regulation.* This Temporary Maximum Price Regulation No. 10 may be replaced by a permanent Maximum Price Regulation or Order issued under the Emergency Price Control Act of 1942.*

§ 1400.12 *Effective period.* This Temporary Maximum Price Regulation No. 10 shall become effective on March 13, 1942, and shall, unless earlier revoked or replaced, expire at 12 o'clock midnight, May 11, 1942.*

Issued this 12th day of March 1942.

JOHN E. HAMM,
Acting Administrator.

[F. R. Doc. 42-2159; Filed, March 12, 1942; 5:03 p. m.]

CHAPTER XV—DEFENSE COMMUNICATIONS BOARD

[Order No. 2]

PART 1701—COASTAL AND MARINE RELAY RADIO STATIONS

Whereas the Defense Communications Board has by Executive Order No. 8964 of December 10, 1941, been authorized, if the national security and defense and the successful conduct of the war so demand, to prescribe classes and types of radio stations and facilities or portions thereof which shall be subject to use, control, supervision, inspection, or closure, in accordance with such prescription, by the Department of War, Department of Navy, or other agency of the United States Government, designated by the Board;

And whereas the Defense Communications Board has determined that the national security and defense and the successful conduct of the war so demand;

Now, therefore, by virtue of authority vested in the Board under the aforementioned Executive Order, the Board hereby directs that:

§ 1701.1 *Authorization of Navy Department to use, control, supervise, inspect, or close coastal and marine relay radio stations.* All coastal and marine relay radio stations, as defined in the Rules and Regulations of the Federal Communications Commission, within the jurisdiction of the United States shall be subject to such use, control, supervision, inspection, or closure by the Navy Department in accordance with the terms of the said Executive Order as may be deemed necessary for the national security and defense and the successful conduct of the war by the Secretary of the Navy, under such regulation as he may prescribe. (E.O. 8964, 6 F.R. 6367)

Subject to such further order as the Board may deem appropriate.

DEFENSE COMMUNICATIONS BOARD,
JAMES LAWRENCE FLY, *Chairman.*

Attest:
HERBERT E. GASTON,
Secretary.

FEBRUARY 26, 1942.

[F. R. Doc. 42-2186; Filed, March 13, 1942; 11:45 a. m.]

TITLE 34—NAVY

CHAPTER I—DEPARTMENT OF THE NAVY

PART 18—REGULATIONS GOVERNING THE USE, CONTROL, SUPERVISION, INSPECTION, OR CLOSURE OF COASTAL AND MARINE RELAY RADIO STATIONS UNDER THE JURISDICTION OF THE UNITED STATES

Pursuant to the authority conferred upon the Secretary of the Navy by Order No. 2 of the Defense Communications Board,[1] issued February 26, 1942, under the authority of the Executive Order of December 10, 1941,[2] promulgated under the power vested in the President by section 606 of the Communications Act of 1934, as amended, and by virtue of the authority residing in the Secretary of the Navy to ensure the protection of shipping and to promote the successful conduct of the war; I hereby prescribe that from and after this date the use, control, supervision, inspection, or closure of coastal and marine relay radio stations, as defined in the Rules and Regulations of the Federal Communications Commission, under the jurisdiction of the United States shall be subject to the following regulations:

Sec.

18.1 Transmission of signals by coastal and marine relay stations prohibited; subject to exemptions.
18.2 Notice to Chief of Naval Operations of intent to establish, close, or modify coastal or marine relay service required.
18.3 Supervision and inspection of coastal and marine relay stations.
18.4 Closure of coastal and marine relay stations by Chief of Naval Operations authorized.
18.5 Temporary suspension of operation by coastal and marine relay stations.
18.6 Exemptions, how made.
18.7 Applicability of rules and regulations of Federal Communications Commission.
18.8 Effectiveness.

§ 18.1 *Transmission of signals by coastal and marine relay stations prohibited; subject to exemptions.* Subject to any exemptions made as provided in § 18.6 of these regulations, no coastal nor marine relay station shall transmit or relay any signal to or for any marine mobile station or aircraft in flight over the seas, nor shall any such station otherwise make any radio transmission.*

*§§ 18.1 to 18.8, inclusive, issued under the authority contained in Order No. 2, Defense Communications Board, February 26, 1942.

§ 18.2 *Notice to Chief of Naval Operations of intent to establish, close, or modify coastal or marine relay service required.* No person shall establish any radio station for the purpose of communication to or for marine mobile stations or aircraft in flight over the seas; nor shall any licensee of a coastal or marine relay station increase, reduce, or otherwise alter any coastal or marine relay service in effect on the date of the issuance of these regulations without first having served notice of such intention upon the Chief of Naval Operations with copy to the Commandant of the Naval District in which such station is located.*

§ 18.3 *Supervision and inspection of coastal and marine relay stations.* All coastal and marine relay stations shall be subject to such supervision and inspection as the Chief of Naval Operations may direct.*

§ 18.4 *Closure of coastal and marine relay stations by Chief of Naval Operations authorized.* The Chief of Naval Operations is hereby authorized to direct any coastal or marine relay station to cease its operations or to order the sealing or removal of any radio apparatus or equipment of any such station whenever in his judgment such action is required in the public interest and necessary to promote the successsful conduct of the war.*

§ 18.5 *Temporary suspension of operation by coastal and marine relay stations.* All coastal and marine relay stations shall, upon receipt of orders from military or naval authority, suspend operation and no such station shall resume operation until authorized so to do by military or naval authority and all such stations shall comply with such other directions which may, from time to time, be issued by military or naval authority in the public interest and to promote the successful conduct of the war.*

§ 18.6 *Exemptions, how made.* Exemptions to the general prohibition against the transmission of signals by coastal and marine relay stations, as provided in § 18.1 of these regulations, may be made by the Chief of Naval Operations and by such other naval authority as may be authorized by the Chief of Naval Operations.*

§ 18.7 *Applicability of rules and regulations of Federal Communications Commission.* These regulations and such instructions as may be issued by naval authority under them shall, until amended or revoked, be effective in lieu of any rules or regulations of the Federal Communications Commission inconsistent therewith. Nothing in these regula-

[1] Title 32, Chapter XV, *supra.*
[2] 6 F.R. 6367.

tions or any instructions as may have been issued under them shall be construed to render ineffective such rules or regulations of the Federal Communications Commission and such other jurisdiction of the Federal Communications Commission under the Communications Act of 1934, as are not inconsistent therewith.*

§ 18.8 *Effectiveness.* These regulations shall take effect immediately and shall continue in effect until the termination of the present conflict, unless sooner modified or revoked by proper authority.*

Issued this 9th day of March 1942.

FRANK KNOX,
Secretary.

[F. R. Doc. 42-2155; Filed, March 12, 1942; 3:51 p. m.]

TITLE 41—PUBLIC CONTRACTS

CHAPTER II—DIVISION OF PUBLIC CONTRACTS

PART 202—MINIMUM WAGE DETERMINATIONS

IN THE MATTER OF AN AMENDMENT TO THE PREVAILING WAGE DETERMINATION IN THE SEAMLESS HOSIERY INDUSTRY

This matter is before me pursuant to section 1 (b) of the Act of June 30, 1936. (49 Stat. 2036; 41 U.S.C. Supp. III 35) entitled "An Act to provide conditions for the purchase of supplies and the making of contracts by the United States, and for other purposes," otherwise known as the Walsh-Healey Public Contracts Act.

On February 3, 1942, the Administrator of the Division of Public Contracts of this Department issued a notice of opportunity to show cause (7 F.R. 797) why my decision dated July 28, 1937, In the Matter of Determination of the Prevailing Minimum Wage in the Seamless Hosiery Industry (2 F.R. 1338) should not be modified by finding that the prevailing minimum wage for persons now employed in that industry is 36 cents per hour or $14.40 for a week of 40 hours and why I should not further modify the determination for the Seamless Hosiery Industry to provide that the applicable regulations for the employment of learners and handicapped workers issued by the Administrator of the Wage and Hour Division of the Department of Labor should apply to contracts awarded subject to the minimum wage determination for that industry under the Walsh-Healey Public Contracts Act.

This notice was predicated upon the belief that the Wage Order, issued by the Administrator of the Wage and Hour Division and effective September 15, 1941, providing that the minimum wage paid by employers in the Seamless Hosiery Industry subject to the provisions of the Fair Labor Standards Act of 1938 must be at least 36 cents per hour, had the effect of establishing 36 cents per hour as the prevailing minimum wage in the industry within the meaning of section 1 (b) of the Walsh-Healey Public Contracts Act.

The notice of opportunity to show cause was sent to trade unions, trade publications, and trade associations. Notice also was given to interested parties by publication in the FEDERAL REGISTER (7 F.R. 797).

No objections or protests to the proposed action were received from any source.

Upon consideration of all the facts and circumstances,

I hereby determine:

§ 202.6 *Seamless hosiery industry.* That the minimum wage for employees engaged in the performance of contracts with agencies of the United States subject to the provisions of the Walsh-Healey Public Contracts Act (49 Stat. 2036; 41 U.S.C. Supp. III 35) for the manufacture and furnishing of seamless hosiery shall be 36 cents per hour or $14.40 for a week of 40 hours, arrived at either upon a time or piece work basis,

Provided, That learners and handicapped workers may be employed in accordance with the present regulations under the Fair Labor Standards Act of 1938 which regulations I hereby adopt for the purposes of this wage determination.

This determination shall be effective and the minimum wages hereby established shall apply to all contracts subject to the Walsh-Healey Public Contracts Act, bids for which are solicited or negotiations otherwise commenced on or after March 30, 1942.

Nothing in this determination shall affect such obligations for the payment of minimum wages as an employer may have under the Fair Labor Standards Act of 1938 or any other law, or agreement more favorable to employees than the requirements of this determination.

Dated: March 12, 1942.

FRANCES PERKINS,
Secretary.

[F. R. Doc. 42-2160; Filed, March 13, 1942; 10:20 a. m.]

TITLE 43—PUBLIC LANDS: INTERIOR

CHAPTER III—GRAZING SERVICE

PART 501—THE FEDERAL RANGE CODE

"PRIOR WATER" DEFINED

Pursuant to the provisions of the act of June 28, 1934 (48 Stat. 1269), as amended, section 2 (l) of the Federal Range Code [Title 43, CFR 501.2 (l)] is amended to read as follows:

§ 501.2 *Definitions.*

* * * * *

(l) *Prior water.* Water which was used to service certain public-land range for a given number of livestock during the 5-year period immediately preceding June 28, 1934: *Provided,* That no water shall be considered as prior unless offered as base property in an application for a grazing license or permit filed within one year after the public lands which were used in creating the priority become a part of a grazing district: *And further provided,* That in cases wherein such lands become a part of a grazing district prior to March 16, 1941, a water shall not be considered as prior unless offered in an application prior to March 16, 1942. It will be considered prior water only to the extent of the greatest number of livestock that was properly grazed from it for a substantial period of time during the 5-year period immediately preceding June 28, 1934. (Sec. 2, 48 Stat. 1270; 43 U.S.C. 315a)

ARCHIE D. RYAN,
Acting Director of Grazing.

Approved: March 12, 1942.

E. K. BURLEW,
First Assistant Secretary.

[F. R. Doc. 42-2163; Filed, March 13, 1942; 9:45 a. m.]

TITLE 46—SHIPPING

CHAPTER I—BUREAU OF MARINE INSPECTION AND NAVIGATION

[Order No. 228]

MARINE ENGINEERING REGULATIONS

AMENDMENTS

FEBRUARY 28, 1942.

Pursuant to the authority of R. S. 4405, as amended (46 U.S.C. 375), the Board of Supervising Inspectors, Bureau of Marine Inspection and Navigation, convened in the conference room, No. 1851, Department of Commerce, Washington, D. C., on January 21, 1942, at which session, after public hearings, the following regulations and amendments were adopted:

The titles of Subchapter F and of the component parts thereof (Parts 50 to 58, inclusive) are amended to read as follows:

SUBCHAPTER F—MARINE ENGINEERING

PART 50—GENERAL PROVISIONS
PART 51—MATERIALS
PART 52—CONSTRUCTION
PART 53—INSTALLATION
PART 54—INSPECTION
PART 55—PIPING SYSTEMS
PART 56—FUSION WELDING
PART 57—SUPPLEMENTARY DATA AND REQUIREMENTS
PART 58—BOILER PLATE; BOILERS AND ATTACHMENTS

SUBCHAPTER F—MARINE ENGINEERING

Part 50 of Subchapter F is amended to read as follows:

PART 50—GENERAL PROVISIONS

Sec.
50.1 Basis and application of rules.
50.2 Definition of terms.

§ 50.1 *Basis and application of rules.* The rules in this subchapter contain specifications and requirements for materials, design, construction, installation, and inspection of boilers, unfired pressure vessels and appurtenances thereof, also piping, valves, fittings, flanges, safety valves, etc., upon the strength and efficiency of which safety of life is dependent, and are intended for maximum temperatures of 1,000° F. Their application is intended for installations contracted for or built after the date the rules in this subchapter became effective.[1] They are not retroactive.

Where existing vessels are reboilered, the mountings and attachments, including feed and blow-off valves and fittings, shall be renewed in accordance with the rules in this subchapter. The steam piping shall be gauged and examined by the local inspectors and if found to be of the thickness required at the time the piping was installed may be continued in service, provided the local inspectors are satisfied that its condition is such as to warrant its continued use.

§ 50.2 *Definition of terms.* Certain terms used in the rules in this subchapter are defined as follows:

[1] The rules contained in Parts 50–57 inclusive, in Subchapter F became effective on July 1, 1935.

(a) "Bureau" means the United States Bureau of Marine Inspection and Navigation.

(b) "Board" means the Board of Supervising Inspectors of the Bureau of Marine Inspection and Navigation.

(c) "Director" means the Director of the Bureau of Marine Inspection and Navigation.

(d) "Inspector" means a duly authorized inspector of the Bureau of Marine Inspection and Navigation.

(e) "Requirements" means process of manufacture, characteristics, physical and chemical properties, tests, workmanship, and finish of materials.

(f) "High temperature" means temperature over 500° F.

(g) "Low" and "moderate temperature" means temperature up to and including 500° F.

(h) "Maximum allowable working pressure" within the meaning of the rules in this subchapter refers to the gage pressure, or the pressure above the atmosphere in pounds per square inch.*

*§§ 50.1 and 50.2 issued under the authority contained in R.S. 4405, 4417a, 4418, 4433, 4434, as amended; 46 U.S.C. 375, 391a, 392, 411, 412.

Part 51 of Subchapter F is amended to read as follows:

PART 51—MATERIALS

GENERAL

Sec.
51.1–1 Statutory requirements.
51.1–2 Basic information requirements.
51.1–3 General classification of materials.
51.1–4 Inspection and testing of class A material.
51.1–5 Chemical analyses.
51.1–6 Certification of class B material.
51.1–7 Tension test.
51.1–8 Test reports.
51.1–9 Re-tests.
51.1–10 Rejections.
51.1–11 Appeals.
51.1–12 Process of steel manufacture.
51.1–13 Stamping plates and specimens.
51.1–14 Stock plates.
51.1–15 Workmanship and finish.
51.1–16 Heat treatment.
51.1–17 Reclassification of materials.
51.1–18 Alternative materials.

MARINE BOILER STEEL PLATE

51.2–1 Scope.
51.2–2 Chemical composition.
51.2–3 Tensile properties.
51.2–4 Modifications in elongation.
51.2–5 Bending properties.
51.2–6 Test specimens.
51.2–7 Number of tests.
51.2–8 Permissible variations in thickness and weight.
51.2–9 Finish.
51.2–10 Marking.

SEAMLESS STEEL DRUM FORGINGS

(Deleted)

STAYBOLT STEEL

51.4–1 Scope.
51.4–2 Process.
51.4–3 Chemical composition.
51.4–4 Tensile properties.
51.4–5 Bending properties.
51.4–6 Test specimens.
51.4–7 Number of tests.
51.4–8 Permissible variations in diameter.
51.4–9 Finish.
51.4–10 Marking.

STEEL BARS AND SHAPES

Sec.
51.5–1 Process.
51.5–2 Chemical composition.
51.5–3 Tension tests.
51.5–4 Modifications in elongation.
51.5–5 Bending properties.
51.5–6 Test specimens.
51.5–7 Number of tests.
51.5–8 Permissible variation in gage.
51.5–9 Finish.
51.5–10 Marking.

WROUGHT-IRON BARS FOR STAYS AND STAY BOLTS

51.6–1 Materials and purposes.
51.6–2 Definitions of terms.
51.6–3 Tensile properties.
51.6–4 Chemical composition and tests.
51.6–5 Modifications in tensile properties.
51.6–6 Bend tests.
51.6–7 Etch tests.
51.6–8 Number of tests.
51.6–9 Finish.
51.6–10 Marking.

RIVET STEEL

51.7–1 Scope.
51.7–2 Process.
51.7–3 Chemical composition.
51.7–4 Tensile properties.
51.7–5 Bending properties.
51.7–6 Test specimens.
51.7–7 Tests of finished rivets.
51.7–8 Permissible variations in diameter.
51.7–9 Workmanship and finish.

RIVET IRON

51.8–1 Materials and purposes.
51.8–2 Chemical properties.
51.8–3 Tensile properties.
51.8–4 Bend tests.
51.8–5 Test specimens.
51.8–6 Number of tests.
51.8–7 Micrographic tests.
51.8–8 Physical properties and tests.
51.8–9 Workmanship and finish.
51.8–10 Inspection.
51.8–11 Rejection.

LAP-WELDED AND SEAMLESS STEEL AND LAP-WELDED IRON BOILER TUBES

51.9–1 Scope.
51.9–2 Process.
51.9–3 Chemical composition.
51.9–4 Check analysis.
51.9–5 Flange tests.
51.9–6 Flattening tests.
51.9–7 Crush test.
51.9–8 Hydrostatic test.
51.9–9 Etch test for charcoal iron tubes.
51.9–10 Test specimens.
51.9–11 Number of tests.
51.9–12 Retests.
51.9–13 Forming operations.
51.9–14 Permissible variations in dimensions and weight.
51.9–15 Finish.
51.9–16 Marking.

ELECTRIC-RESISTANCE-WELDED STEEL AND OPEN-HEARTH IRON BOILER AND SUPERHEATER TUBES

51.9a–1 Scope.
51.9a–2 Process.
51.9a–3 Manufacture.
51.9a–4 Chemical composition.
51.9a–5 Check analysis.
51.9a–6 Flattening test.
51.9a–7 Flange test.
51.9a–8 Crush test for Grades A & B tubes.
51.9a–9 Tensile properties.
51.9a–10 Flaring test for Grade D tubes.
51.9a–11 Hardness test for Grade D tubes.
51.9a–12 Hydrostatic test.
51.9a–13 Test specimens.
51.9a–14 Number of tests.
51.9a–15 Retests.
51.9a–16 Forming operations.
51.9a–17 Finish.
51.9a–18 Marking.

SEAMLESS STEEL BOILER TUBES FOR HIGH-PRESSURE SERVICE; MEDIUM CARBON SEAMLESS STEEL BOILER AND SUPERHEATER TUBES; CARBON-MOLYBDENUM ALLOY-STEEL BOILER AND SUPERHEATER TUBES

Sec.
51.10-1 Scope.
51.10-2 Process.
51.10-3 Manufacture.
51.10-4 Chemical composition.
51.10-5 Check analysis.
51.10-6 Tensile properties.
51.10-7 Flattening test.
51.10-8 Flaring test.
51.10-9 Hardness test.
51.10-10 Hydrostatic test.
51.10-11 Test specimens.
51.10-12 Number of tests.
51.10-13 Retests.
51.10-14 Retreatment.
51.10-15 Forming operations.
51.10-16 Permissible variations in dimensions and weight.
51.10-17 Finish.
51.10-18 Marking.

STEEL PIPE

51.11-1 Scope.
51.11-2 Process.
51.11-3 Chemical requirements.
51.11-4 Tensile requirements.
51.11-5 Bending properties.
51.11-6 Flattening tests.
51.11-7 Hydrostatic tests.
51.11-8 Test procedure.
51.11-9 Finish and marking.

WELDED WROUGHT-IRON PIPE

51.12-1 Material and purpose.
51.12-1a Chemical composition.
51.12-2 Tensile properties.
51.12-3 Fracture tests.
51.12-4 Bend tests.
51.12-5 Test specimens.
51.12-6 Number of tests.
51.12-7 Hydrostatic tests.
51.12-8 Permissible variations and dimensions.
51.12-9 Inspection and rejection.
51.12-10 Marking.

SEAMLESS BRASS PIPE

51.13-1 Scope.
51.13-2 Process.
51.13-3 Temper.
51.13-4 Chemical requirements.
51.13-5 Sampling.
51.13-6 Expansion test.
51.13-7 Strain test.
51.13-8 Threading test.
51.13-9 Bending properties.
51.13-10 Hydrostatic test.
51.13-11 Number of tests.
51.13-12 Workmanship.
51.13-13 Finish.
51.13-14 Rejection.

SEAMLESS COPPER PIPE

51.14-1 Scope.
51.14-2 Process.
51.14-3 Condition or temper.
51.14-4 Chemical requirements.
51.14-5 Sampling for chemical analysis.
51.14-6 Expansion test.
51.14-7 Bending properties.
51.14-8 Microscopic examination.
51.14-9 Hydrostatic test.
51.14-10 Number of tests.

STEEL FORGINGS

51.15-1 Scope.
51.15-2 Process.
51.15-3 Discard.
51.15-4 Manufacturing practice.
51.15-5 Heat treatment.
51.15-6 Chemical composition.
51.15-7 Tensile properties.
51.15-8 Hydrostatic tests.
51.15-9 Test specimens.
51.15-10 Number of tests.
51.15-11 Retests.
51.15-12 Macro-etch tests.
51.15-13 Workmanship and finish.
51.15-14 Mailing.

ALLOY-STEEL BOLTING MATERIAL

51.16-1 Scope.
51.16-2 Process.
51.16-3 Heat treatment.
51.16-4 Chemical composition.
51.16-5 Tensile properties.
51.16-6 Brinell hardness test.
51.16-7 Workmanship and finish.
51.16-8 Nuts and washers.

CARBON AND ALLOY-STEEL NUTS FOR HIGH-TEMPERATURE SERVICE

51.16a-1 Scope.
51.16a-2 Process.
51.16a-3 Fabrication.
51.16a-4 Stress relieving.
51.16a-5 Chemical composition.
51.16a-6 Hardness test.
51.16a-7 Drift test.
51.16a-8 Stripping test.
51.16a-9 Finish.

STEEL CASTINGS

51.17-1 Scope.
51.17-2 Process.
51.17-3 Heat treatment.
51.17-4 Chemical composition.
51.17-5 Tensile properties.
51.17-6 Bending properties.
51.17-7 Hydrostatic tests.
51.17-8 Test specimens.
51.17-9 Number of tests.
51.17-10 Retests.
51.17-11 Workmanship.
51.17-12 Finish.

GRAY IRON CASTINGS FOR VALVES, FLANGES, AND PIPE FITTINGS

51.18-1 Scope.
51.18-2 Process.
51.18-3 Chemical composition.
51.18-4 Tensile properties.
51.18-5 Transverse test.
51.18-6 Mold.
51.18-7 Test specimens.
51.18-8 Tension test apparatus.
51.18-9 Records.
51.18-10 Workmanship and finish.

MALLEABLE IRON CASTINGS

51.19-1 Material and scope.
51.19-2 Process.
51.19-3 Tensile properties.
51.19-4 Test specimens.
51.19-5 Number of tests.
51.19-6 Special tests.
51.19-7 Reannealing.
51.19-8 Workmanship and finish.
51.19-9 Marking.
51.19-10 Inspection and rejection.

MALLEABLE IRON CASTINGS FOR PIPE FITTINGS

51.19-11 Cupola malleable iron.
51.19-12 Grade B castings.
51.19-13 Tensile properties.
51.19-14 Test specimens.
51.19-15 Requirements.
51.19-16 Workmanship and finish.

BRONZE CASTINGS

51.20-1 Materials and purposes.
51.20-2 Manufacture.
51.20-3 Chemical composition.
51.20-4 Chemical analysis.
51.20-5 Tensile properties.
51.20-6 Test specimens.
51.20-7 Number of tests.
51.20-8 Workmanship and finish.
51.20-9 Marking.
51.20-10 Certification.

STEEL PLATES (FLANGE AND FIREBOX QUALITY)

Sec.
51.21-1 Scope.
51.21-2 Process.
51.21-3 Heat treatment.
51.21-4 Chemical composition.
51.21-5 Tensile properties.
51.21-6 Modifications in elongation.
51.21-7 Bending properties.
51.21-8 Test specimens.
51.21-9 Number of tests.
51.21-10 Permissible variations in thickness and weight.
51.21-11 Finish.
51.21-12 Marking.
51.21-13 Manufacturer's certification.

STEEL PLATES FOR WELDING

51.22-1 Scope.
51.22-2 Process.
51.22-3 Chemical composition.
51.22-4 Tensile properties.
51.22-5 Bending properties.
51.22-6 Test specimens.
51.22-7 Number of tests.
51.22-8 Permissible variations in thickness and weight.
51.22-9 Finish.
51.22-10 Marking.
51.22-11 Manufacturer's certification.

General

§ 51.1-1 *Statutory requirements.* (a) Plates, bars, and shapes used as pressure parts of boilers intended for marine service shall be tested, inspected, and stamped by an inspector in accordance with the requirements of Title 52 of the Revised Statutes of the United States.

(b) Material used for pressure parts in the construction of pressure vessels other than boilers shall conform to the requirements of this part. Unfired pressure vessels designed for a maximum allowable working pressure not exceeding 700 lbs. per square inch and temperatures not exceeding 500° F. may be constructed of steel plate meeting the specifications of §§ 51.21-1 to 51-21-13 inclusive, or §§ 51.22-1 to 51.22-11 inclusive, provided that such material is tested and stamped by the manufacturer. Plates for this purpose are not required to be tested and inspected by a duly authorized inspector, but may be accepted on the certification of the manufacturer as to their chemical and physical properties.*

*§§ 51.1-1 to 51.22-11, inclusive, issued under the authority of R.S. 4405, 4417a, 4418, 4426, 4430, 4433, 4434, as amended; 46 U.S.C. 375, 391a, 392, 404, 408, 411, 412.

§ 51.1-2 *Basic information requirements.* When ordering material for the construction of boilers or pressure vessels to be installed on vessels subject to the jurisdiction of the Bureau, boiler manufacturers shall, as far as practicable, furnish the following information to the manufacturer of the material and to the Director.

(a) Name and location of manufacturer's works.

(b) Type and identifying dimensions of boiler or pressure vessel.

(c) Manufacturer's serial or shop number.

(d) Working pressure required.

(e) Local inspection district in which the completed boiler or pressure vessel will be first inspected after installation.

(f) Name and address of builder of hull.

(g) Owner of hull.

(h) Name or builder's number of hull.

(i) Waters upon which the vessel is to be navigated.

(j) Home port.*

§ 51.1-3 *General classification of materials.* (a) The materials to be used in the construction of boilers and pressure vessels, piping, valves, fittings, and appurtenances as hereinafter enumerated shall be of three general classes of which classes A and B shall be used for pressure parts and class C may be used for other parts as specified.

Class A: Tested materials manufactured under the supervision of the Bureau, tests of which shall be witnessed by an inspector.

Class B: Certified materials tested by the manufacturers, and certified by them as conforming to the requirements.

Class C: Materials for nonpressure parts of boilers or pressure vessels such as casings for water-tube boilers, uptakes, furnace fronts, and operating equipment shall be of good commercial quality. No detail requirements are herein specified for materials in this class. Class C materials shall be accepted by inspectors without requiring tests or certification by manufacturers.

(b) Except as may be otherwise required, the classification of materials under A and B and the sections of this part in which they are specified, are as follows:

CLASS A

Sec.	
51.2-1 to 51.2-10	Marine boiler steel plate.
51.3-1 to 51.3-13	(Deleted.)
51.4-1 to 51.4-10	Staybolt steel.
51.5-1 to 51.5-10	Steel bars and shapes.
51.6-1 to 51.6-10	Extra-refined wrought iron.
51.7-1 to 51.7-9	Rivet steel.
51.8-1 to 51.8-11	Rivet iron.

CLASS B

51.9-1 to 51.9-16	Lap-welded and seamless steel and lap-welded iron boiler tubes.
51.9a-1 to 51.9a-18	Electric-resistance-welded steel and open-hearth iron boiler and superheater tubes.
51.10-1 to 51.10-18	Seamless steel boiler tubes for high-pressure service. Medium-carbon seamless steel boiler and superheater tubes. Carbon-molybdenum alloy-steel boiler and superheater tubes.
51.11-1 to 51.11-9	Steel pipe.
51.12-1 to 51.12-10	Welded wrought-iron pipe.
51.13-1 to 51.13-9	Seamless brass pipe.
51.14-1 to 51.14-7	Copper pipe.
51.15-1 to 51.15-14	Steel forgings.
51.16-1 to 51.16-8	Alloy-steel bolting material.
51.16a-1 to 51.16a-9	Carbon and alloy-steel nuts for high-temperature service.
51.17-1 to 51.17-12	Steel castings.
51.18-1 to 51.18-10	Gray-iron castings.
51.19-1 to 51.19-16	Malleable-iron castings.
51.20-1 to 51.20-10	Bronze castings.
51.21-1 to 51.21-13	Steel plates, flange and firebox quality.
51.22-1 to 51.22-11	Steel plates for welding, flange and firebox quality.

*

§ 51.1-4 *Inspection and testing of class A material.* Inspectors shall have free entry at all times to those parts of the works where material subject to the rules in this part is being manufactured. The manufacturer shall afford inspectors all reasonable facilities to satisfy them that the material is being manufactured in accordance with the requirements of the Bureau. Unless otherwise authorized, tests and inspection shall be made at the place of manufacture prior to shipment and shall be so conducted as not to interfere unnecessarily with the operation of the works. Inspectors shall assure themselves that test specimens are marked for certain identification with the materials which they represent. Unless otherwise specified, tests shall be made at ordinary temperature.*

§ 51.1-5 *Chemical analyses.* (a) A ladle analysis of each melt of steel for materials comprised in class A shall be made by the manufacturer and a certified report thereof shall be furnished by him to the inspector upon request. This analysis shall be made from a test ingot taken during the pouring of the melt. The chemical composition thus determined shall conform to the specified requirements. This requirement shall apply also to the following materials comprised in class B:

Steel forgings specified in §§ 51.15-1 to 51.15-14.

Alloy-steel bolting material specified in §§ 51.16-1 to 51.16-8.

Steel castings specified in §§ 51.17-1 to 51.17-12.

Bronze castings specified in §§ 51.20-1 to 51.20-10.

Steel plates, flange and firebox quality specified in §§ 51.21-1 to 51.21-13.

Steel plates of flange or firebox quality for welding specified in §§ 51.22-1 to 51.22-11.

(b) A check analysis may be made at the discretion of the Director from test specimens representing material for which chemical composition is specified in any section of this part, in either of classes A or B. The chemical composition thus determined shall conform to the requirements.*

§ 51.1-6 *Certification of class B material.* (a) Certification of chemical analyses and physical tests of materials of class B shall be an affidavit by the manufacturer on an officially approved form certifying that all materials of this class supplied by him for marine service do, or will conform to all the requirements of the rules in this part applicable thereto.

(b) Materials in this class are not required to be tested in the presence of an inspector, but whenever deemed necessary by the Director, he may detail an inspector to witness such tests and satisfy himself that the requirements of the specification for Class B materials are being complied with.*

§ 51.1-7 *Tension tests.* All tension tests shall be made on approved standard and calibrated machines. The yield point in tension tests shall be determined by the drop of the beam or the halt in the gage of the testing machine. Except where otherwise specified in §§ 51.15-1 to 51.15-14, 51.17-1 to 51.17-12, the speed of the cross head of the machine shall not exceed three-fourths inch per minute. Figures M-1 to M-8, inclusive, show particulars of test specimens, etc. The ends of all specimens shall be of form to fit the holders of the testing machine in such a way that the load will be axial.*

§ 51.1-8 *Test reports.* Inspectors shall report the results of official tests of materials to the Director on Form 934. Copies thereof shall be forwarded through the supervising inspector to the local inspectors in the district where the material is to be processed or fabricated.*

§ 51.1-9 *Re-tests.* When the result of any of the physical tests specified for any of the materials does not conform to the requirements, two additional specimens may, at the request of the manufacturer, be taken from the same lot and tested in the manner specified, but in such case, both of the specimens must conform to the requirements. In the case of tension tests, this re-test shall be allowed if the percentage of elongation obtained is less than required, or if any part of the fracture is outside of the middle third of the gage length. If any test specimen develops flaws, it shall be discarded and another specimen from the same lot be substituted.*

§ 51.1-10 *Rejections.* Failure of the test (or re-tests) specified in the rules in this subchapter for each particular material shall be cause for rejection. Unless otherwise required, any rejection shall be reported by the inspector within 5 working days from the receipt of the test specimen. Acceptance of material on results of tests at the place of manufacture shall not prejudice the right to reject any of such material in which injurious defects are subsequently discovered. The manufacturer shall be promptly notified of such subsequent rejections, and the records shall be corrected.*

§ 51.1-11 *Appeals.* In case of dissatisfaction with the results of any test, the manufacturer may, within 30 days from date of test report, appeal to the Director from the inspector's decision. Tested specimens which represent rejected material shall be preserved for at least 30 days.*

§ 51.1-12 *Process of steel manufacture.* Unless otherwise officially authorized by the Bureau, all wrought steel to be used in the construction of boilers or other pressure vessels to be installed on vessels shall be manufactured by either the open-hearth or electric furnace process.*

§ 51.1-13 *Stamping plates and specimens.* (a) Plates shall be stamped by the manufacturer, before they are tested, with his name or trademark, and the minimum tensile strength of the plate per square inch of cross-sectional area

expressed in thousandths. Inspectors shall permit cutting a plate into two or more parts before testing, but each part shall be stamped or match-marked for identification before cutting. All plates accepted by the inspector as conforming to the requirements shall be stamped by him near the manufacturer's stamp with the official stamp of the Bureau, the initials of his name, and the serial number. All test specimens shall be ring-stamped or match-marked for identification before being detached. Plates shall be stamped lengthwise in two places on one long side about 18 inches from the edges at the corners. Each butt strap shall be stamped lengthwise of the plate about the middle of the strap.*

(b) The impression of the official stamp of the Bureau for stamping plates and specimens shall be as shown below:

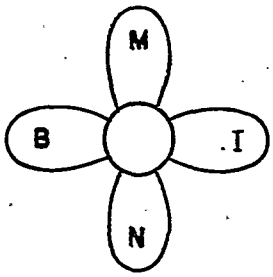

*

§ 51.1–14 *Stock plates.* Plates may be ordered to be carried in stock ashore or on shipboard for repairs to boilers and other pressure vessels. Such plates shall be inspected and tested at the place of manufacture and stamped for identification as stock plates. A test report for such plates shall be furnished to the supervising inspector of the district where the purchaser is located, with a copy to the purchaser. The supervising inspector shall furnish a copy thereof to the local inspectors in the district where the material is kept in stock, and if the material is to be used by persons other than the original purchaser, they shall also be furnished with a copy of such report, for submittal by them to the local board in the district where the repairs are actually to be made before the material may be used. Vessels carrying such stock plates shall obtain and carry identification and test records of each plate. Where such plates are cut into pieces for repairs, the local inspectors shall, upon request, stamp each piece so detached for identification with the original plate and a record of such stamping shall be made.*

§ 51.1–15 *Workmanship and finish.* All materials within the scope of the rules in this subchapter shall be free from injurious defects and shall have a workmanlike finish.*

§ 51.1–16 *Heat treatment.* Some of the materials herein specified require heat treatment. This may consist of annealing, or of normalizing, or of normalizing followed by annealing, or of normalizing followed by a draw back to a temperature below the critical range. Annealing shall consist of allowing material to cool after forging or rolling to a temperature below the critical range, then reheating it to proper temperature to refine the grain and allowing it to cool in the furnace. Normalizing shall consist of allowing material to cool after forging or rolling to a temperature below the critical range, then reheating it to proper temperature to refine the grain and allowing it to cool in still air.*

§ 51.1–17 *Reclassification of materials.* When more than one grade is specified for any material or purpose and tests of material of a superior grade fail to meet the requirements such material may be reclassified and accepted as a specified lower grade if it fulfills the specified requirements for the latter. In such cases, the material shall be restamped or re-marked as required for proper identification, and revised records shall be made to cover it.*

§ 51.1–18 *Alternative materials.* If, in the development of industrial arts, other suitable or improved materials differing from those specified in this part are developed, their use will be given consideration, upon formal application to the Bureau with full information as to the characteristics of the material, and such scientific data and facts as may be necessary to establish the suitability and safety of the material for the use proposed. The material requirements in this subchapter are minimum requirements and are not intended to bar better materials.*

Marine Boiler Steel Plate

NOTE: In substantial agreement with A. S. T. M. Designations A 201–39, A 212–39, and A 204–39. Tested material—Class A.

§ 51.2–1 *Scope.* (a) There shall be seven grades of marine boiler steel plates, subject to Class A inspection. These grades are designated A, B, C, D, E, F, and G. Grades A and B cover two ordinary tensile strength ranges in carbon-silicon steel plates; Grades C and D cover two high tensile strength ranges in carbon-silicon steel plates; Grades E, F, and G cover three high tensile strength ranges in carbon-molybdenum steel plates. All grades may be furnished in flange or firebox qualities. Plates of flange quality are limited in thickness to two inches. Plates of firebox quality are limited in thickness as follows: Grades A and B, to six inches; Grades C and D, to four and one-half inches; Grades E and F, to six inches; and Grade G to four inches. Where forge welding is necessary, the carbon content of the steel shall not exceed 0.22 percent.

(b) Steel plates for any part of a boiler subject to pressure and exposed to the fire or products of combustion shall be of firebox quality; steel plates for any part of a boiler subject to pressure and not exposed to the fire or products of combustion shall be of firebox or flange quality.

(c) All of these grades may be fusion welded, but welding technique is of fundamental importance. Fusion welding procedure shall be in accordance with §§ 56.20–1 to 56.20–19.

(d) Sufficient discard from the top of each ingot shall be made, at any stage of the manufacture, to secure freedom from piping and undue segregation in the finished product, but in no case shall the amount of top discard be less than 30 percent.

(e) *Heat treatment.* (1) When plates are to be used in a boiler or pressure vessel which is to be stress relieved after welding, the test specimens for such plates shall be stress relieved by gradually and uniformly heating them to 1100° F. to 1200° F., holding at that temperature for a period of one hour per inch of thickness, and cooling in still atmosphere. In such cases both the plates and the test specimens shall be stamped "S. R." to show that the tensile strength of the plate in the stress relieved state is not less than the minimum specified.

(2) Plates over two inches in thickness, before being fabricated, shall be uniformly heat treated to produce grain refinement. Heat treatment involving quenching in a liquid medium is not permitted. If this treatment is not done at the rolling mill the testing shall be carried out in accordance with subparagraph (3).

(3) When a fabricator who is equipped to perform the work properly, elects to do the required heat treatment for grain refinement he shall so indicate in his orders to the mill and he shall accept the plates on the basis of the mill tests. The plate manufacturer shall make the tests prescribed in these specifications, the tension and bend test specimens to be prepared from full thickness pieces heat treated under conditions he considers appropriate for grain refinement and to give the test requirements. The manufacturer shall inform the fabricator of the procedure followed in treating the pieces at the mill for guidance in treating the plates. The required physical properties shall be determined after heat treatment of the plates on specimens prepared from pieces similarly and simultaneously treated with the plates. Pieces for two tension tests, one top and one bottom, shall be provided from each plate as rolled.[1] These pieces shall be stamped by the inspector with his official stamp for identification.

(4) In the case of plates over two inches in thickness which subsequently are to be stress relieved, the test specimens for such plates shall, before testing, be stress relieved as specified in subparagraph (1) following the heat treatment for grain refinement.

(5) Orders to the plate manufacturer shall specify when plates subject to the requirements of this section are to be stress relieved and when they are to be heat treated for grain refinement by the fabricator so that proper provision may be made for the treatment of test specimens.*

[1] The term "plate as rolled" used here and in §§ 51.2–6 (c) and 51.2–7 (a) refers to the unit plate rolled from a slab or directly from an ingot in its relation to the location and number of specimens; not to its condition.

§ 51.2-2 *Chemical composition.* (a) The steel shall conform to the following requirements as to chemical composition:

	Grades						
	A	B	C	D	E	F	G
Carbon, max., percent:							
For plates 1 in. and under in thickness	0.20	0.24	0.28	0.31	0.18	0.20	0.23
For plates over 1 to 2 in., incl., in thickness	.24	.27	.31	.33	.21	.23	.26
For plates over 2 to 4 in., incl., in thickness	.27	.30	.33	.35	.23	.25	.28
For plates over 4 to 6 in., incl., in thickness	.31	.35	-------	-------	.25	.27	-------
Manganese, max., percent	.80	.80	.90	.90	.50 to .90	.50 to .90	.50 to .90
Phosphorous, max., percent:							
Flange	.04	.04	.04	.04	.04	.04	.04
Firebox	.035	.035	.035	.035	.035	.035	.035
Sulphur, max., percent:							
Flange	.05	.05	.05	.05	.05	.05	.05
Firebox	.04	.04	.04	.04	.04	.04	.04
Silicon, percent	.15 to .30	.15 to .30	.15 to .30	.15 to .30	.15 to .30	.15 to .30	.15 to .30
Molybdenum, percent	-------	-------	-------	-------	.40 to .60	.40 to .60	.40 to .60

*

§ 51.2-3 *Tensile properties*—(a) *Grades A and B.* (1) The material shall conform to the following requirements as to tensile properties:

	Grade A	*Grade B*
Tensile strength, psi	55,000 to 65,000	60,000 to 70,000
Yield point, Min. psi	0.5 tens. str.	0.5 tens. str.
Elongation in 8 inches, min. percent:		
Flange	1,500,000[a] / tens. str.	1,500,000[a] / tens. str.
Firebox	1,550,000[a b] / tens. str.	1,550,000[a b] / tens. str.
Elongation in 2 inches, min. percent:[c]		
Firebox	1,750,000[d] / tens. str.	1,750,000 / tens. str.

[a] See § 51.2-4 (a) (1) and (3).
[b] See subparagraph (3).
[c] When specimen shown in Figure M-2 is used; See § 51.2-6 (f).
[d] See § 51.2-4 (a) (2).

(2) Tensile strength only need be determined on the tension test specimen taken from the top of firebox plates, and it shall not exceed 67,000 psi. for Grade A, nor 72,000 psi. for Grade B.

(3) Should the formula in subparagraph (1) for minimum elongation in 8 inches for firebox steel give a value of less than 25 percent for Grade A material or 23 percent for Grade B material the minimum allowable elongation shall be 25 and 23 percent for Grades A and B respectively, subject to the modifications of § 51.2-4 (a) (1).

(b) *Grades C and D.* (1) The material shall conform to the following requirements as to tensile properties:

	Grade C	*Grade D*
Tensile strength, psi	65,000 to 77,000	70,000 to 82,000
Yield point, min. psi	0.5 tens. str.	0.5 tens. str.
Elongation in 8 inches, min. percent:		
Flange	1,550,000[a] / tens. str.	1,550,000[a] / tens. str.
Firebox	1,600,000[a] / tens. str.	1,600,000[a] / tens. str.
Elongation in 2 inches, min. percent:		
Firebox	1,750,000[b] / tens. str.	1,750,000[b] / tens. str.

[a] See § 51.2-4 (b) (1) and (3).
[b] See § 51.2-4 (b) (2).

(2) Tensile strength only need be determined on the tension test specimen taken from the top of firebox plates, and it shall not exceed 79,000 psi. for Grade C, nor 84,000 psi. for Grade D.

(c) *Grades E, F, and G.* (1) The material shall conform to the following requirements as to tensile properties:

	Grade E	*Grade F*	*Grade G*
Tensile strength, psi	65,000 to 77,000	70,000 to 82,000	75,000 to 87,000
Yield point, min. psi. but in no case less than	0.55 tens. str. 37,000	0.55 tens. str. 40,000	0.55 tens. str. 43,000
Elongation in 8 inches, min. percent:			
Flange	1,600,000[a] / tens. str.	1,600,000[a] / tens. str.	1,600,000[a] / tens. str.
Firebox	1,650,000[a] / tens. str.	1,650,000[a] / tens. str.	1,650,000[a] / tens. str.
Elongation in 2 inches, min. percent:[b]			
Firebox	1,750,000[c] / tens. str.	1,750,000[c] / tens. str.	1,750,000[c] / tens. str.

[a] See § 51.2-4 (c) (1) and (3).
[b] When specimen shown in Figure M-2 is used; see § 51.2-6 (f).
[c] See § 51.2-4 (c) (2).

(2) Tensile strength only need be determined on the tension test specimen taken from the top of firebox plates, and it shall not exceed 80,000 psi. for Grade E, 85,000 psi. for Grade F, nor 90,000 psi. for Grade G.*

§ 51.2-4 *Modifications in elongation*—(a) *Grades A and B.* (1) For material over three-quarters inch in thickness, a deduction from the percentage of elongation in 8 inches specified in § 51.2-3 (a) (1) and (3) of 0.125 percent shall be made for each increase of one-thirty-second inch of the specified thickness above three-fourths inch, to a minimum of 21 percent for flange steel and 22 percent for firebox steel of Grade A; and 20 percent for flange steel and 21 percent for firebox steel of Grade B.

(2) For material over two and one-half inches in thickness, a deduction from the percentage of elongation in 2 inches specified in § 51.2-3 (a) (1) of 0.5 percent shall be made for each increase of one-half inch of the specified thickness above two and one-half inches.

(3) For material one-fourth inch and under in thickness, the elongation shall be measured on a gage length of twenty-four times the thickness of the specimen.

(b) *Grades C and D.* (1) For material over three-fourths inch in thickness, a deduction from the percentage of elongation in 8 inches specified in § 51.2-3 (b) (1) of 0.125 percent shall be made for each increase of one-thirty-second inch of the specified thickness above three-fourths inch, to a minimum of 18 percent for flange steel and 19 percent for firebox steel.

(2) For material over two and one-half inches in thickness, a deduction from the percentage of elongation in 2 inches specified in § 51.2-3 (b) (1) of 0.5 percent shall be made for each increase of one-half inch of the specified thickness above two and one-half inches.

(3) For material one-fourth inch and under in thickness, the elongation shall be measured on a gage length twenty-four times the thickness of the specimen.

(c) *Grades E, F, and G.* (1) For plates over three-fourths inch in thickness, a deduction from the percentage of elongation in 8 inches prescribed in § 51.2-3 (c) (1) of 0.125 percent shall be made for each increase of one-thirty-second inch of the specified thickness above three-fourths inch, to a minimum of 19 percent for Grades E and F, and 18 percent for Grade G.

(2) For plates over two and one-half inches in thickness, a deduction from the percentage of elongation in 2 inches prescribed in § 51.2-3 (c) (1) of 0.5 percent shall be made for each increase of one-half inch of the specified thickness above two and one-half inches.

(3) For material one-fourth inch and under in thickness, the elongation shall be measured on a gage length twenty-four times the thickness of the specimen.*

§ 51.2-5 *Bending properties.* The bend test specimen shall stand being bent cold through 180 degrees without cracking on the outside of the bent portion around a pin the diameter of which shall have the following relation to the thickness of the specimen. When the test is made on a specimen reduced in thickness, the rolled surface shall be on the outer curve of the bend.

Thickness of material	Ratio of pin diameter to thickness of specimen			
	Grade A	Grade B	Grade C	Grade D
1 inch and under	½	1	1½	2
Over 1 to 1½ in. incl	1	1½	2	2
Over 1½ to 3 in. incl	1½	2	2	2½
Over 3 to 4 in. incl	2	2½	2½	3
Over 4 to 6 in. incl	2½	3	-------	-------

	Grade E	Grade F	Grade G
1 inch and under	1	1½	2
Over 1 inch to 2 in. incl	1½	2	2½
Over 2 inches to 4 inches, incl	1½	2	3
Over 4 inches to 6 inches, incl	2	2½	-------

*

§51.2-6 *Test specimens.* (a) For plates 2 inches and under in thickness the test specimens shall be prepared for testing from the material in its rolled condition.

(b) For plates over 2 inches in thickness the test specimens shall be prepared from the material in its heat-treated condition or from full thickness samples similarly and simultaneously treated. See §§ 51.2-1 (e) (2) and (3).

(c) Tension test specimens for firebox steel shall be taken from the top and bottom corners of the plate as rolled (see Note under § 51.2-1 (e) (3)), parallel to its longitudinal axis, and for flange steel from the bottom corner of the plate only. Bend test specimens shall be taken from the middle of the top of the plate as rolled, at right angles to its longitudinal axis.

(d) For plates 2 inches and under in thickness, tension and bend test specimens shall be the full thickness of the material and shall be machined to the form and dimensions shown in Figure M-1; or the bend test specimen may be machined with both edges parallel.

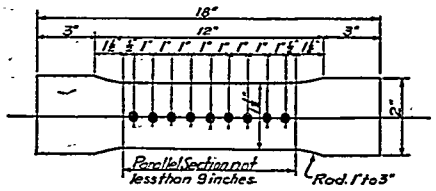

FIG. M-1.

(e) For Grade A and B plates up to 4 inches, inclusive, in thickness, tension test specimens may be the full thickness of the material and of the form shown in Figure M-1; when adequate testing machine capacity is available.

(f) For plates over 2 inches in thickness, except as permitted in paragraph (e), tension test specimens shall be machined to the form and dimensions shown in Figure M-2; and the axis of each such specimen shall be located midway between the center and the top or bottom surface of the plate. The bend test specimens shall be at least one and one-half inches in width, with both edges parallel, and may be reduced to two inches in thickness; but shall have one surface as rolled.

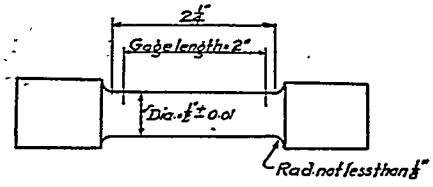

FIG. M-2.—For simplicity of computation it is recommended that the finished diameter of this test piece be made 0.505 inch which is equivalent to two tenths of a square inch in area.

(g) The sides of the bend test specimens may have the corners rounded to a radius not over one-sixteenth inch for plates two inches and under in thickness, and not over one-eighth inch for plates over two inches in thickness.*

§ 51.2-7 *Number of tests.* (a) Two tension tests and one bend test shall be made from each firebox steel plate as rolled. One tension test and one bend test shall be made from each flange steel plate as rolled. (See Note under § 51.2-1 (e) (3).)

(b) If any test specimen shows defective machining or develops flaws, it may be discarded and another specimen substituted.

(c) If the percentage of elongation of any test specimen is less than that specified in § 51.2-3 and any part of the fracture is more than three-fourths inch from the center of the gage length of a two inch specimen or is outside the middle third of the gage length of an eight inch specimen, as indicated by scribe scratches marked on the specimen before testing, a retest shall be allowed.*

§ 51.2-8 *Permissible variations in thickness and weight.* No plate shall vary more than 0.01 inch under the thickness specified.*

§ 51.2-9 *Finish.* The finished plates shall be free from injurious defect and shall have a workmanlike finish.*

§ 51.2-10 *Marking.* The quality classification to be marked on all Class A plates in accordance with § 51.1-13 shall be the word "Marine".*

Seamless Steel Drum Forgings

§§ 51.3-1 to 51.3-13 (Deleted).

Staybolt Steel

NOTE: In substantial agreement with A. S. T. M. Designation A 31-40. Tested material—Class A.

§ 51.4-1 *Scope.* These specifications cover two grades of staybolt steel to be used in boilers and other pressure vessels.*

§ 51.4-2 *Process.* The steel shall be made by either or both of the following processes: open-hearth or electric-furnace.*

§ 51.4-3 *Chemical composition.* The steel shall conform to the following requirements as to chemical composition:

	Grade A	Grade B
Carbon, max., percent		0.27
Manganese, percent	0.30 to 0.50	0.40 to 0.80
Phosphorous, max., percent	.04	.04
Sulphur, max., percent	.05	.05
Silicon, max., percent		.30

*

§ 51.4-4 *Tensile properties.* The material shall conform to the following requirements as to tensile properties:

	Grade A	Grade B
Tensile strength, psi	45,000 to 55,000	58,000 to 68,000.
Yield point, min. psi., but in no case less than	0.5 tens. str.	0.5 tens. str. 32,000.
Elongation in 8 in., min. percent	$\frac{1,500,000}{\text{tens. str.}}$ but not to exceed 30.	$\frac{1,500,000}{\text{tens. str.}}$ but in no case less than 23.

*

§ 51.4-5 *Bending properties*—(a) *Cold-bend tests.* The test specimen for Grade A steel shall stand being bent cold through 180 degrees flat on itself without cracking on the outside of the bent portion.

The test specimen for Grade B steel shall stand being bent cold through 180 degrees without cracking on the outside of the bent portion, as follows: For material three-fourths inch and under in diameter, around a pin the diameter of which is equal to one half the diameter of the specimen; for material over three-fourths inch in diameter, around a pin the diameter of which is equal to the diameter of the specimen.

(b) *Quench-bend tests.* The test specimen for Grade A steel when heated to a light cherry red as seen in the dark (not less than 1200 F.), and quenched at once in water the temperature of which is between 80 and 90 F., shall stand being bent through 180° flat on itself without cracking on the outside of the bent portion.

The test specimen for Grade B steel, when similarly heated and quenched, shall stand being bent cold through 180° without cracking on the outside of the bent portion, as follows: For material three-fourths inch and under in diameter, around a pin the diameter of which is equal to the diameter of the specimen; for material over three-fourths inch in diameter, around a pin the diameter of which is equal to one and one-half times the diameter of the specimen.*

§ 51.4-6 *Test specimens.* Test specimens shall be the full diameter of the bars as rolled.*

§ 51.4-7 *Number of tests.* (a) Two tension, two cold-bend, and two quench-bend tests shall be made from each melt. Each test shall conform to the requirements specified in §§ 51.4-4 to 51.4-5.

(b) If any test specimen develops flaws, it may be discarded and another specimen substituted.

(c) If the percentage of elongation of any tension test specimen is less than that specified in § 51.4-4 and any part of the fracture is outside the middle third of the gage length, as indicated by scribe scratches marked on the specimen before testing, a retest shall be allowed.*

§ 51.4-8 *Permissible variations in diameter.* The diameter of hot-finished staybolt bars shall not vary from the size specified by more than the amounts prescribed in table I.

TABLE I.—*Permissible variations in the size of hot-rolled rounds and squares*

Specified size	Variations from size (inches)		Out of round or square (inches)
	Over	Under	
5/16" and under	0.005	0.005	0.008
Over 5/16" to 7/16" incl	.006	.006	.009
Over 7/16" to 5/8" incl	.007	.007	.010
Over 5/8" to 7/8" incl	.008	.008	.012
Over 7/8" to 1" incl	.009	.009	.013
Over 1" to 1 1/16" incl	.010	.010	.015
Over 1 1/16" to 1 1/4" incl	.011	.011	.016
Over 1 1/4" to 1 3/8" incl	.012	.012	.018
Over 1 3/8" to 1 1/2" incl	.014	.014	.021
Over 1 1/2" to 2" incl	1/64	1/64	.023

*

§ 51.4-9 *Finish.* The material shall be free from injurious defects and shall have a workmanlike finish.*

§ 51.4-10 *Marking.* The staybolt bars shall, when loaded for shipment, be properly separated and marked with the name or brand of the manufacturer and the melt number for identification. The melt number shall be legibly marked on each test specimen.*

Steel Bars and Shapes

NOTE: In substantial agreement with A. S. M. E. Specification No. S-7. Tested Material—Class A.

§ 51.5-1 *Process.* The steel shall be made by either or both of the following processes: open-hearth or electric-furnace.*

§ 51.5-2 *Chemical composition.* The steel shall conform to the following requirements as to chemical composition:

Phosphorous, max. percent:	
Acid	0.05
Basic	0.04
Sulphur, max. percent	0.05

*

§ 51.5-3 *Tension tests.* The material shall conform to the following requirements as to tensile properties:

Tensile strength, lb. per sq. in.	55,000-65,000.
Yield point, min. lb. per sq. in.	0.05 tens. str.
Elongation in 8 in., min. percent	$\frac{1,500,000}{\text{tens. str.}}$
Elongation in 2 in., min. percent	20.

*

§ 51.5-4 *Modifications in elongation.* For material over three-fourths inch in thickness, a deduction from the percentages of elongation in 8 inches specified, of 0.25 percent shall be made for each increase of one-thirty-second inch of the specified thickness above three-fourths inch.*

§ 51.5-5 *Bending properties.* The bend test specimen shall stand being bent cold through 180° without cracking on the outside of the bent portion around a pin the diameter of which shall have the following relation to the thickness of the specimen:

Thickness of material	Ratio of pin diameter to thickness of specimen	
	Plates, sections, and bars	Eyebar flats unannealed
Three-fourths inch and under	½	1½
Over three-fourths to 1 inch, incl.	1	2½
Over 1 to 1½ inch, incl.	1½	3
Over 1½ inch to 2 inches, incl.	2½	4
Over 2 inches	3	4½

*

§ 51.5-6 *Test specimens.* (a) Test specimens shall be of the full thickness or diameter of material as rolled, except as specified in (b) and (c).

(b) Test specimens for shapes and flats may be machined to the form and dimensions shown in Figure M-1 or with both edges parallel.

(c) Test specimens for bars over one and one-half inches in thickness or diameter may be machined to a thickness or diameter of at least three-fourths inch for a length of at least 9 inches; or tension test specimens may conform to the dimensions shown in Figure M-2. Bend test specimens may be one by one-half inch in section.*

§ 51.5-7 *Number of tests.* (a) One tension and one bend test shall be made from each melt; except that if material from one melt differs three-eighths inch or more in thickness, one tension and one bend test shall be made from both the thickest and the thinnest material rolled.

(b) If any test specimen shows defective machining or develops flaws, it may be discarded and another specimen substituted.

(c) If the percentage of elongation of any tension test specimen is less than that specified in § 51.5-3 and any part of the fracture is more than three-fourths inch from the center of the gage length of a 2-inch specimen, or is outside the middle third of the gage length of an 8-inch specimen, as indicated by scribe scratches marked on the specimen before testing, a retest shall be allowed.*

§ 51.5-8 *Permissible variation in gage.* The diameter of each bar shall not vary from that specified more than the amount given in the following table:

Diameter, inches		Variation in diameter, inches		
Over	To and including	Under	Over	Out-of-round
----------	5/16	.007	.007	.010
5/16	7/16	.007	.007	.011
7/16	5/8	.008	.008	.012
5/8	7/8	.009	.009	.014
7/8	1	.010	.010	.015
1	1⅛	.012	.012	.016
1⅛	1¼	.014	.014	.018
1¼	1⅜	.016	.016	.022
1⅜	1½	.018	.018	.026
1½	2	.022	.022	.030
2	2½	0	1/16	1/32
2½	3½	0	3/64	3/64

*

§ 51.5-9 *Finish.* The finished material shall be free from injurious defects and shall have a workmanlike finish.*

§ 51.5-10 *Marking.* Bars shall, when loaded for shipment, be properly separated, and marked with the name or brand of the manufacturer and melt number for identification. The melt number shall be legibly marked on each test specimen.*

Wrought-Iron Bars for Stays and Stay Bolts

NOTE: In substantial agreement with A. S. T. M. Specification A 84-39. Tested material—Class A.

§ 51.6-1 *Materials and purposes.* The bars shall be rolled from a slab pile, or box pile made from reworked wrought iron or reworked knobbled charcoal iron. The original muck or knobbled bars shall be twice piled and rerolled. All bars shall be the full length of the piles. The wrought iron and the component parts of the slab pile, or box pile shall be free from any admixture of iron scrap or steel.*

§ 51.6-2 *Definitions of terms*—(a) *Wrought iron.* Wrought iron, within the meaning of this specification, is a ferrous material aggregated from a solidifying mass of pasty particles of highly refined metallic iron, with which, without subsequent fusion, is incorporated a minutely and uniformly distributed quantity of slag.

(b) *Slab pile.* A slab pile is built up wholly of flat bars of iron all running the full length of the pile.

(c) *Box pile.* A box pile is a pile, the sides, top, and bottom of which are formed of flat bars, and the interior of a number of small bars, all bars running the full length of the pile.

(d) *Scrap iron.* This term applies to foreign or bought scrap and does not include local mill products free from foreign or bought scrap.*

§ 51.6-3 *Tensile properties.* The materials shall have the following tensile properties:

Tensile strength ..... lbs. per sq. in.	47,000-62,000
Yield point, min.	0.6 tens. str.
Elongation in 8 inches, min. ..... percent	30
Reduction of area, min. ..... do	48

*

§ 51.6-4 *Chemical composition and tests.* (a) The iron shall conform to the following requirements as to chemical composition: Manganese, not over 0.06 percent.

(b) If, in the judgment of the inspector, it is necessary, an analysis may be made from a broken test specimen representing each lot of bars to determine whether the chemical composition is in compliance with the above requirement.

(c) Drillings for analysis shall be so taken as to represent the entire cross-section of the specimen.*

§ 51.6-5 *Modifications in tensile properties.* For bars ⅞ inch down to and including 11/16 inch in diameter, the elongation shall be not less than 28 percent. For bars ⅝ inch and under in diameter, the elongation shall be not less than 25 percent. For bars over 1¼ square inches in sectional area, the following deductions from the minimum requirements specified in § 51.6-3 shall be made for each square inch of nominal section above 1¼ square inches:

Tensile strength	250 lbs., but not under 46,000 lbs. per sq. inch.
Reduction of area	3 percent, but not under 40 percent.

*

§ 51.6-6 *Bend tests.* (a) Bend tests may be made by pressure or blows; the test specimen shall stand being bent cold through 180° flat on itself in both directions, without fracture on the outside of the bent portions.

(b) The test specimen, when nicked 25 percent around with a tool having a 60° cutting edge, to a depth of not less than 8 nor more than 16 percent of the diameter of the specimen and broken, shall show a wholly fibrous fracture.*

§ 51.6-7 *Etch tests.* (a) The cross section of the test specimen shall be ground or polished and etched for a sufficient period to develop the structure. This test shall show the material as follows: The material to have been rolled from a slab pile, or box pile and to be uniform and free from steel.

NOTE: A solution of 10 percent hydrochloric acid (sp. gr. 1.19), 30 percent sulphuric acid (sp. gr. 1.84), and 60 percent water; or 25

percent nitric acid (sp. gr. 1.42), and 75 percent water, is recommended for the etch test.

(b) Tension test specimens and bend-test specimens shall be of the full section of the material as rolled, if possible; otherwise the specimen shall be machined from the material as rolled.

(c) Etch-test specimens shall be of the full section of material as rolled.*

§ 51.6–8 *Number of tests.* (a) All bars of a given grade and size shall be piled separately, sorted in lots of 100 each. Two bars shall be selected at random from each lot or fraction thereof and tested as specified, but only one of these bars shall be tested as specified in § 51.6–7.

(b) If any test specimen from the bars originally selected to represent a lot of material contains surface defects not visible before testing but visible after testing, or if a tension-test specimen breaks outside the middle third of the gage length, the individual bar shall be rejected and one retest from a different bar will be allowed.*

§ 51.6–9 *Finish.* The bars shall be smoothly rolled and free from slivers, depressions, crop ends, seams, and evidences of being burnt.*

§ 51.6–10 *Marking.* The bars shall be stamped or otherwise marked as designated by the inspector.*

Rivet Steel

NOTE: In substantial agreement with A. S. T. M. Designations Nos. A 31–40 and A 202–39. Tested Material—Class A.

§ 51.7–1 *Scope.* These specifications cover two grades of low carbon steel rivets and one grade of chrome-manganese-silicon alloy-steel rivets to be used in boilers and other pressure vessels. These grades are designated A, B and C respectively.*

§ 51.7–2 *Process.* The steel shall be made by either or both of the following processes: open-hearth or electric-furnace.*

§ 51.7–3 *Chemical composition.* The steel shall conform to the following requirements as to chemical composition:

	Grade A	Grade B	Grade C
Carbon, max. percent	----------	0.27	0.17
Manganese, percent	.30 to .60	.40 to .80	1.05 to 1.40
Phosphorous, max. percent	.04	.04	.035
Sulphur, max. percent	.05	.05	.04
Silicon, max. percent	----------	.30	.60 to .90
Chromium, percent	----------	----------	.30 to .60

*

§ 51.7–4 *Tensile properties.* The material shall conform to the following requirements as to tensile properties:

	Grade A	Grade B	Grade C
Tensile strength, psi	45,000 to 55,000	58,000 to 68,000	75,000 to 90,000.
Yield point, min. psi. but in no case less than	0.5 tens. str.	0.5 tens. str. 32,000	0.60 tens. str.
Elongation in 8 in. min. percent	$\frac{1,500,000}{\text{tens. str.}}$ but need not exceed 30.	$\frac{1,500,000}{\text{tens. str.}}$ but in no case less than 23.	$\frac{1,600,000}{\text{tens. str.}}$

[1] For Grade C material over three-fourths inch in thickness, a deduction from the percentage of elongation specified above of 0.125 percent shall be made for each increase of one-thirty-second inch of the specified thickness above three-fourths inch to a minimum of 19 percent.

For Grade C material one-fourth inch and under in thickness, the elongation shall be measured on a gage length of 24 times the thickness of the specimen.

*

§ 51.7–5 *Bending properties*—(a) *Cold-bend tests.* (1) The test specimen for Grade A steel shall stand being bent cold through 180° flat on itself without cracking on the outside of the bent portion.

(2) The test specimen for Grade B steel shall stand being bent cold through 180° without cracking on the outside of the bent portion, as follows: For material three-fourths inch and under in diameter, around a pin the diameter of which is equal to one half the diameter of the specimen; for material over three-fourths inch in diameter, around a pin the diameter of which is equal to the diameter of the specimen.

(3) The test specimen for Grade C steel shall stand being bent cold through 180° without cracking on the outside of the bent portion around a pin the diameter of which shall have the following relation to the thickness of the specimen:

Thickness of material	Ratio of pin diameter to thickness of specimen
1 in. and under	2
Over 1 to 1½ in., incl	2½
Over 1½ to 2 in., incl	3

(b) *Quench-bend tests.* (1) The test specimen for Grade A steel when heated to a light cherry red as seen in the dark (not less than 1200 F.), and quenched at once in water the temperature of which is between 80 and 90 F., shall stand being bent through 180° flat on itself without cracking on the outside of the bent portion.

(2) The test specimen for Grade B steel, when similarly heated and quenched shall stand being bent cold through 180° without cracking on the outside of the bent portion as follows: For material three-fourths inch and under in diameter, around a pin the diameter of which is equal to one and one-half times the diameter of the specimen.*

§ 51.7–6 *Test specimens.* (a) Test specimens shall be the full diameter of the bar as rolled and, in the case of rivet bars which have been cold-drawn shall be normalized before testing.

(b) Two tension, two cold-bend, and two quench-bend tests where called for, shall be made from each melt. Each test shall conform to the requirements specified in §§ 51.7–4 and 51.7–5.

(c) If any test specimen develops flaws, it may be discarded and another specimen substituted.

(d) If the percentage of elongation of any tension test specimen is less than that specified in § 51.7–4 and any part of the fracture is outside the middle third of the gage length, as indicated by scribe scratches marked on the specimen before testing, a retest shall be allowed.*

§ 51.7–7 *Tests of finished rivets*—(a) *Bending properties.* (1) The rivet shank of Grade A steel shall stand being bent cold through 180° flat on itself as shown in Figure M–3 without cracking on the outside of the bent portion.

(2) The rivet shank of Grade B steel shall stand being bent cold through 180° without cracking on the outside of the bent portion, as follows: For material three-fourths inch and under in diameter, around a pin the diameter of which is equal to the diameter of the shank; for material over three-fourths inch in diameter, around a pin the diameter of which is equal to one and one-half times the diameter of the shank.

(3) The rivet shank of Grade C steel shall stand being bent cold through 180° without cracking on the outside of the bent portion, as follows: For material one inch and under in diameter, around a pin the diameter of which is equal to two and one-half times the diameter of the shank; for material over one inch in diameter, around a pin the diameter of which is equal to three times the diameter of the shank.

(b) *Flattening tests.* The rivet head shall stand being flattened, while hot, to a diameter two and one-half times the diameter of the shank, as shown in Figure M–4, without cracking at the edges.

(c) *Number of tests.* Three bend and three flattening tests shall be made from each size in each lot of rivets offered for inspection. Each test shall conform to the requirements specified in § 51.7–7.*

§ 51.7–8 *Permissible variations in diameter*—(a) *Finished rivets.* The diameter of finished rivets, measured cold, shall not vary from the size specified by more than the amounts prescribed in the following table:

Diameter specified in inches	Permissible variations in diameter, in inches	
	Snap gage measurement	Ring gage measurement
½" and under	0.022" under	0.020" over
Over ½" to 1" incl	.025" under	.030" over
Over 1" to 1¼" incl	.027" under	.035" over
Over 1¼" to 1½" incl	.030" under	.040" over
Over 1½" to 2" incl	.037" under	.040" over

(b) Snap gage measurement shall be made at the point of minimum diameter, but it is not required that the rivet shall turn completely in the gage. Measurements of the maximum tolerance shall be made with a ring gage, all rivets to slip full to the head in the gage of the required size for the various diameters.

(c) *Rivet heads.* The dimensions of the rivet heads shall not vary from the size specified by more than the amounts prescribed in the following table:

Specified size of rivets	Permissible variations in diameter of head, inches	
	Width	Height
½"	plus 1/16" minus 1/32"	plus 1/32"
9/16"	plus 1/16" minus 1/32"	plus 1/32"
⅝"	plus 1/16" minus 1/32"	plus 1/32"
11/16"	plus 1/16" minus 1/32"	plus 1/32"
¾"	plus 5/64" minus 1/32"	plus 1/32"
⅞"	plus 5/64" minus 1/32"	plus 1/32"
1"	plus 5/64" minus 1/32"	plus 1/32"

*

§ 51.7–9 *Workmanship and finish.* The finished rivets shall be true to form and concentric, shall be made in a workmanlike manner, and shall be free from injurious defects.

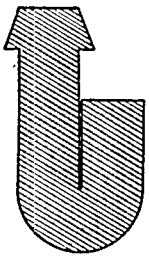

FIG. M-3
The Bending Test For Rivets.

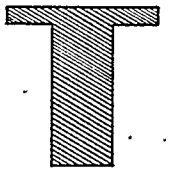

FIG. M-4
The Flattening Test For Rivets.

*

Rivet Iron

NOTE: In substantial agreement with A. S. T. M. Designation No. A 152–39. Tested material—Class A.

§ 51.8–1 *Materials and purposes.* The rivet bars shall be made of wrought iron which shall be free from any admixture of iron scrap or steel.

NOTE: Wrought iron is a ferrous material, aggregated from a solidifying mass of pasty particles of highly refined metallic iron, with which, without subsequent fusion, is incorporated a minutely and uniformly distributed quantity of slag.*

§ 51.8–2 *Chemical composition.* The iron shall conform to the following requirement as to chemical composition: Manganese, max., percent, 0.06.*

§ 51.8–3 *Tensile properties.* The material shall conform to the following requirements as to tensile properties:

Tensile strength, min., psi	47,000
Yield point, min., psi	0.6 tensile strength
Elongation in 8 in., min., percent:	
Rounds ¼ to 7/16 in., incl., in diameter	22
Rounds over 7/16 to ¾ in., incl., in diameter	24
Rounds over ¾ to 2 in., incl., in diameter	28

*

§ 51.8–4 *Bend tests*—(a) *Quenched, cold-bend tests.* A test specimen shall be heated between 1,600° and 1,700° F., and quenched in cold water, after which it shall stand being bent cold through 90° around a pin, the diameter of which is equal to the diameter of the specimen without fracture on the outside of the bent portion.

(b) *Nick-bend tests.* A test specimen, when nicked 25 percent around the circumference with a tool having a 60° cutting edge, to a depth of not less than 8 nor more than 16 percent of the diameter or thickness of the specimen, and broken slowly, shall show a wholly fibrous fracture.

(c) *Hot-bend tests.* A test specimen, when heated to a temperature between 1,700° and 1,800° F., shall stand being bent through 180° flat on itself without fracture on the outside of the bent portion.

(d) *Methods.* Bend tests may be made by pressure or blows.*

§ 51.8–5 *Test specimens.* All test specimens shall be of the full section of the material as rolled.*

§ 51.8–6 *Number of tests.* (a) All bars of a given size shall be piled separately, sorted in lots of 100 each. Two bars shall be selected at random from each lot or fraction thereof and tested as specified in §§ 51.8–3 to 51.8–5.

(b) If any of the specimens originally selected to represent a lot of material contains surface defects not visible before testing, but visible after testing, or if a tension-test specimen breaks outside the middle third of the gage length, as indicated by scribe scratches marked on the specimen before testing, the individual specimen shall be rejected and one retest from a different bar shall be allowed.*

§ 51.8–7 *Micrographic tests.* If doubt exists as to the presence of steel, the inspector may make micrographic examination to assist in determining whether the material conforms to the requirements of § 51.8–1.*

§ 51.8–8 *Physical properties and tests*—(a) *Flattening tests.* The rivet head shall stand being flattened, while hot, to a diameter two times the diameter of the shank, as shown in Figure M–4, without cracking at the edges.

(b) *Etch test.* The rivet shall be split longitudinally through head and shank. After grinding or polishing and etching in acid, the section shall show freedom of folds at base of head, and the fiber lines shall show symmetrical displacement.

NOTE: A solution of 10 percent hydrochloric acid (sp. gr. 1.19), 30 percent sulphuric acid (sp. gr. 1.84), and 60 percent water; or 25 percent nitric acid (sp. gr. 1.42) and 75 percent water, is recommended for the etch test.

(c) Three flattening and three etch tests shall be made from each lot of 2,000 lbs. or less of any one diameter of rivets offered for inspection. Each test shall conform to the requirements specified in paragraphs (a) and (b).*

§ 51.8–9 *Workmanship and finish.* The rivets shall be true to form and concentric, shall be made in a workmanlike manner, and shall be free from injurious defects. The heads shall not show cracks or splits on the edge but may contain a slight flash.*

§ 51.8–10 *Inspection.* All inspections shall be made at the place of manufacture prior to shipment, unless otherwise specified, and the inspector shall have the right to reject all rivets found to be not in compliance with the requirements of §§ 51.8–1 to 51.8–11.*

§ 51.8–11 *Rejection.* Rivets which show defects subsequent to their acceptance at the place of manufacture will be rejected and the manufacturer shall be notified.*

Lap-Welded and Seamless Steel and Lap-Welded Iron Boiler Tubes

NOTE: In substantial agreement with A. S. T. M. Designation No. A 83–40. Certified material—Class B.

§ 51.9–1 *Scope.* These specifications cover lap-welded and seamless steel, and lap-welded iron boiler tubes and boiler flues, including safe ends, arch and stay tubes, and seamless superheater and small boiler tubes.*

§ 51.9–2 *Process.* (a) The material for lap-welded or seamless steel tubes shall be made by either or both of the following processes: open-hearth or electric furnace. The material for open-hearth iron tubes shall be made by the open-hearth process.

(b) The material for wrought iron tubes shall be made by the knobbled, hammered charcoal iron process.*

§ 51.9–3 *Chemical composition* (a) Chemical analysis will not be required for charcoal iron tubes.

(b) Material made by the open-hearth or electric furnace processes shall conform to the following requirements as to chemical composition:

	Grade A, low-carbon steel	Grade B, open-hearth iron
Carbon, percent	0.03 to 0.18	0.03 max.
Manganese, percent	.30 to .60	.03 max.
Phosphorous, max. percent	.04	.02
Sulphur, max. percent	.045	.045

*

§ 51.9–4 *Check analysis.* (a) An analysis of two tubes from each lot of 250 tubes or fraction thereof, and from each lot of 2,000 ft. or fraction thereof, of safe-end material may be made by the inspector. Drillings for analysis shall be taken from several points around each tube selected for analysis. The chemical composition thus determined shall conform to the requirements specified in § 51.9–3 (b).

(b) If the analysis of either tube does not conform to the requirements specified, an analysis of two additional tubes from the same lot shall be made, each of which shall conform to the requirements specified in § 51.9–3 (b).*

§ 51.9–5 *Flange tests.* (a) For tubes having wall thicknesses[1] less than 10 percent of their outside diameters, and providing the thickness does not exceed 0.200 inch, a section not less than four inches in length shall be capable of having a flange turned over at a right angle to the body of the tube without cracking or showing flaws. This flange as measured from the outside of the tube shall be not less than one-eighth inch nor more than one-half inch. Within these limits, the width of the flange shall be not less than the following:

[1] The term wall thickness shall be defined as the actual mean wall of the material used.

Outside diameter of tube, inches	Width of flange: Open-hearth or electric furnace. Grades A and B tubes.	Width of flange: Charcoal-iron tubes.
2½ and under	15 percent of outside diameter	12.5 percent of outside diameter.
Over 2½ to 3¾	⅜ inch	¾ inch.
Over 3¾ to 6	10 percent of outside diameter	10 percent of outside diameter.

(b) For tubes other than those specified in paragraph (a), the flange test shall not be required.

(c) In making the flange test, it is recommended that the flaring tool and die block shown in Figure M-5 be used:

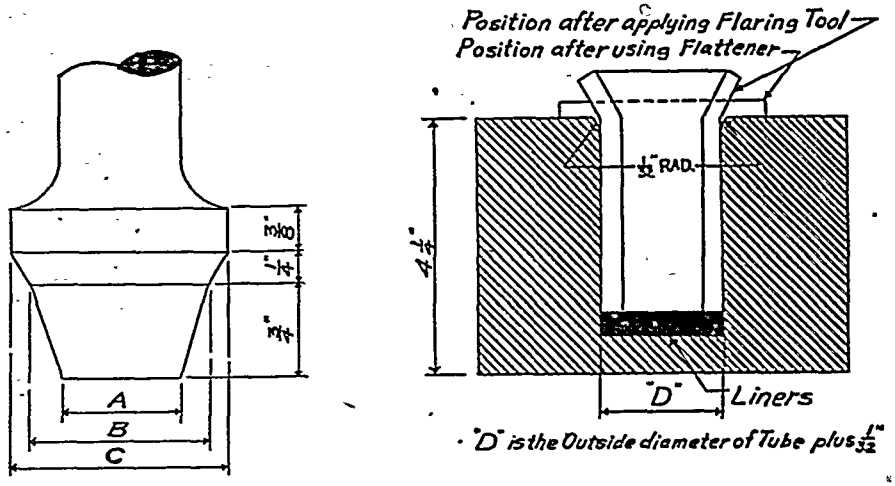

Flaring tool — Die block

A=Outside diameter of tubes less ⅝"
B=Outside diameter of tubes less 3/8"
C=Outside diameter of tubes plus 5/16"

FIG. M5.—*Flaring tool and die block for flange test.*

§ 51.9-6 *Flattening tests.* (a) For tubes having wall thicknesses not exceeding 10 percent of their outside diameters, and providing the thickness does not exceed 0.200 inch, a section not less than two and one-half inches in length shall stand being flattened between parallel plates, without cracking or showing flaws, until the distance between the plates is as follows:

For seamless tubes—three times the wall thickness.

For lap-welded tubes—five times the wall thickness.

(b) For tubes other than specified in paragraph (a), a section not less than two and one-half inches in length shall stand being flattened between parallel plates, without cracking or showing flaws until the distance between the plates is as follows:

For seamless tubes—four times the wall thickness.

For lap-welded tubes—six times the wall thickness.

(c) Superficial ruptures as a result of minor surface imperfections shall not be cause for rejection.

NOTE: In the case of lap-welded charcoal-iron tubes over 0.200 inches in thickness the test shall be made with the weld 45° away from the point of maximum bend. For other lap-welded charcoal-iron tubes and for all steel lap-welded tubes covered by paragraphs (a) and (b), the weld shall be placed in the line of the maximum bend.

*

§ 51.9-7 *Crush test.* When required by the inspector crushing tests shall be made on sections of tube two and one-half inches in length which shall stand crushing longitudinally, without cracking, splitting, or opening at the weld, as follows: Slight surface checks shall not be cause for rejection.

Wall thickness of tubes (inches)	Height of crushed section (inches): Grades A and B tubes	Height of crushed section (inches): Charcoal-iron tubes
0.135 and under	1¾	1⅛
Over 0.135	1¾	1½

[1] Or until outside folds are in contact.

*

§ 51.9-8 *Hydrostatic test.* (a) Prior to upsetting, swaging, expanding, bending, or other forming operations, each tube shall be tested at the mill to the hydrostatic pressures as follows:

Tubes under five inches in diameter shall withstand an internal hydrostatic pressure of 1,000 psi., and tubes five inches and over in diameter shall withstand an internal hydrostatic pressure of 800 psi., provided the fiber stress corresponding to these pressures does not exceed 16,000 psi., as determined by the following formula. Should the fiber stress corresponding to these pressures exceed the above figures, the hydrostatic test pressure shall be determined by the following formula:

$$P=\frac{2St}{D}$$

where:
P=Hydrostatic test pressure in pounds per square inch,
S=Allowable fiber stress of 16,000 psi.,
t=Thickness of the tube wall in inches, and
D=Outside diameter of the tube in inches.

(b) Lap-welded tubes shall be struck near both ends, while under the test pressure, with a 2-lb. steel hand hammer or its equivalent.

§ 51.9-9 *Etch test for charcoal-iron tubes.* To determine that a tube is charcoal-iron a cross section of the tube may be turned or ground to a true surface, polished free from dirt or cracks, and etched[1] until the soft parts are sufficiently dissolved to show a decided ridged surface, with the weld very distinct. A steel tube so etched would show an even or homogeneous surface.*

§ 51.9-10 *Test specimens.* (a) Test specimens required for the flange and flattening tests specified in §§ 51.9-5 and 51.9-6 shall be taken from the ends of finished tubes prior to upsetting, swaging, expanding, or other forming operations, or being cut to lengths. They shall be smooth on the ends and free from burrs and flaws.

(b) All specimens shall be tested at room temperature.*

§ 51.9-11 *Number of tests.* (a) One of each of the tests specified in §§ 51.9-5, 51.9-6, and 51.9-7 shall be made on each of two tubes from each lot of 250 tubes or fraction thereof, and from each 2,000 feet or fraction thereof, of safe-end material.

(b) Each tube shall be subjected to the hydrostatic test specified in § 51.9-8.*

§ 51.9-12 *Retests.* If the results of the physical tests of either of the tubes selected for test do not conform to the requirements specified in §§ 51.9-5 and 51.9-6, and 51.9-7, retests shall be made on two additional tubes from the same lot, each of which shall conform to the requirements specified.*

§ 51.9-13 *Forming operations.* Tubes when inserted in the boiler shall stand expanding and beading without showing cracks, or flaws, or opening at the weld. Superheater tubes when properly manipulated shall stand all forging, welding, and bending operations necessary for application without developing defects.*

§ 51.9-14 *Permissible variations in dimensions and weight.* Variations in outside diameter, wall thickness, weight, and length, from those specified, shall not exceed the amounts prescribed in the following table:

[1] A solution of 10 percent hydrochloric acid (sp. gr. 1.19), 30 percent sulphuric acid (sp. gr. 1.84), and 60 percent water; or 25 percent nitric acid (sp. gr. 1.42) and 75 percent water, is recommended for the etch test.

PERMISSIBLE VARIATIONS AND WEIGHTS

Size, outside diameter, inches	Outside diameter (including out of roundness) in.[a] [b]		Wall thickness, percent [a] [c]								Weight [d] per ft. percent		Cut length, inches [e]	
			0.095 in. and under		Over 0.095 to 0.150 in., incl.		Over 0.150 to 0.180 in., incl.		Over 0.180 in.					
	Over	Under	Over	Under	Over	Under	Over	Under	Over	Under	Over	Under	Over	Under
Hot-Finished Tubes														
4 and under	1/64	1/32	40	0	35	0	33	0	28	0	16	0	3/16	0
Over 4	1/64	3/64	------	------	35	0	33	0	28	0	16	0	3/16	0
Cold-Drawn Tubes														
			Over				Under							
Under 1	0.004	0.004	20				0				12	0	1/8	0
1 to 1½ incl	.006	.006	20				0				12	0	1/8	0
Over 1½ to 2 excl	.008	.008	22				0				13	0	1/8	0
2 to 2½ excl	.010	.010	22				0				13	0	3/16	0
2½ to 3 excl	.012	.012	22				0				13	0	3/16	0
3 to 4 incl	.015	.015	22				0				13	0	3/16	0
Over 4	.015	.025	22				0				13	0	3/16	0

[a] These permissible variations in outside diameter and wall thickness apply only to the tubes as rolled or drawn and before swaging, expanding, bending, polishing, or other fabricating operations.
[b] Cold-drawn tubing, having a specified wall thickness which is 3 percent, or less than 3 percent, of the outside diameter cannot be straightened properly without a certain amount of ovality resulting in the diameter, consequently such tubes, while having an average outside diameter within the permissible variations prescribed in the table, will require additional ovality permissible variation of plus or minus 0.5 percent of the outside diameter.
[c] On tubes 2 inches and over in outside diameter and 0.220 inch and over in thickness the variation in wall thickness in any one cross-section of any one tube shall not exceed plus or minus 10 percent of the actual average wall of that section. The actual average wall is defined as the average of the thickest and thinnest wall in that section.
[d] The permissible variations in weight apply to lots of 50 tubes or more in sizes 4 inches and under in outside diameter, and to lots of 20 tubes or more in sizes over 4 inches in outside diameter.
[e] Permissible variations in length apply to tubes before bending.

§ 51.9–15 *Finish.* Finished tubes shall be reasonably straight and have smooth ends, free from burrs. They shall be free from injurious defects and shall have a workmanlike finish.*

§ 51.9–16 *Marking.* (a) The name or brand of the manufacturer, the type of material from which it is made, whether seamless or lap-welded, and whether steel or iron, together with the hydrostatic test pressure in lbs. per square inch, shall be legibly stenciled on each tube 1¼ inches in outside diameter and over, provided the length is not under three feet.

(b) On tubes less than one and one-quarter inches in diameter and on all tubes under three feet in length, the information specified in paragraph (a) shall be marked on a tag securely attached to the bundle or box in which the tubes are shipped.*

Electric-Resistance-Welded Steel and Open-Hearth Iron Boiler and Superheater Tubes

NOTE: In substantial agreement with A. S. T. M. Designations A 178–40 and A 226–40. Certified Material—Class B.

§ 51.9a–1 *Scope.* (a) These specifications cover three grades of electric-resistance-welded tubes made of steel and open-hearth iron and intended for boiler tubes, boiler flues, superheater tubes, and safe ends;[1] and one grade of electric-resistance-welded silicon-killed steel boiler and superheater tubes. These grades shall be designated Grade A, a low-carbon steel tube; Grade B, an open-hearth iron tube; Grade C, a medium-carbon steel tube; and Grade D, a silicon-killed steel tube.

(b) Grade D tubes less than two inches in outside diameter shall have wall thicknesses of not less than 8 percent of the outside diameter and in no case less than 0.085 inch. Grade D tubes two inches and over in outside diameter shall have wall thicknesses of not less than 0.200 inch.

(c) The type desired shall be specified in the order.*

§ 51.9a–2 *Process.* The material shall be made by either or both of the following processes: open-hearth or electric-furnace. Grade D shall be a killed steel.*

§ 51.9a–3 *Manufacture.* Tubes shall be made by electric-resistance-welding and shall be normalized at a temperature above the upper critical temperature.*

§ 51.9a–4 *Chemical composition.* The steel shall conform to the following requirements as to chemical composition:

[1] Grade C tubes are not suitable for safe-ending by forge welding.

	Grade A	Grade B	Grade C	Grade D
Carbon, percent	0.08 to 0.18	0.03 max.	0.35 max.	0.08 to 0.18
Manganese, percent	.30 to .60	.03 max.	.80 max.	.30 to .60
Phosphorous, max. percent	.04	.02	.04	.04
Sulphur, max. percent	.045	.045	.045	.045
Silicon, max. percent	------	------	------	.25

§ 51.9a–5 *Check analysis.* (a) Grades A, B, and C. An analysis of two tubes from each lot of 250 tubes or fraction thereof, and from each lot of 2000 feet or fraction thereof of safe-end material, may be made by the inspector. Drillings for analysis shall be taken from several points around each tube selected for analysis. The chemical composition thus determined shall conform to the requirements prescribed in § 51.9a–4.

(b) Grade D. An analysis of two tubes from each lot of 100 tubes or fraction thereof may be made by the inspector. Drillings for analysis shall be taken from several points around each tube selected for analysis. The chemical composition thus determined shall conform to the requirements prescribed in § 51.9a–4.

(c) All grades. If the analysis of either tube does not conform to the requirements specified, an analysis of two additional tubes from the same lot shall be made, each of which shall conform to the requirements specified in § 51.9a–4.*

§ 51.9a–6 *Flattening test.* (a) For Grades A and B tubes having wall thicknesses not exceeding ten percent of their outside diameters, and providing the thickness does not exceed 0.200 inch, a section not less than two and one-half inches in length shall stand being flattened between parallel plates until the distance between the plates is three times the wall thickness without cracking or showing flaws.

(b) For Grades A and B tubes other than specified in paragraph (a), and for Grade D tubes, a section not less than two and one-half inches in length shall stand being flattened between parallel plates until the distance between the plates is four times the wall thickness, without cracking or showing flaws.

(c) For Grade C tubes, a section not less than two and one-half inches in length shall stand being flattened between parallel plates until opposite walls of the tube meet. No opening in the weld shall take place until the distance between the plates is less than two-thirds of the original outside diameter of the tube. No cracks or breaks in the metal elsewhere than in the weld shall occur until the distance between the plates is less than one-third of the original diameter of the tube. Evidence of laminations or burnt material shall not develop during the entire flattening process.

(d) The weld shall be placed in the line of maximum bend for all grades.

(e) Superficial ruptures as a result of minor surface imperfections shall not be cause for rejection.*

§ 51.9a–7 *Flange test.* (a) For Grades A, B, and C tubes not more than five inches in diameter and having wall thicknesses not exceeding ten percent of their outside thickness, and providing the thickness does not exceed 0.200 inch, a section not less than four inches in length shall be capable of having a flange turned over at a right angle to the body of the tube without cracking or showing flaws. This flange as measured from the outside of the tube shall not be less than one-eighth inch nor more than one-half

*

inch. Within these limits the width of the flange shall be not less than the following:

Outside diameter of tube, inches	Width of flange	
	Grades A and B	Grade C
2½ and under	15 percent of outside diameter.	75 percent of that required for grades A and B.
Over 2½ to 3¾	⅜ inch	
Over 3¾ to 5	10 percent of outside diameter.	

(b) For tubes other than specified in paragraph (a), the flange shall not be required.

(c) In making the flange test, it is recommended that the flaring tool and die block shown in Figure M-5 be used.*

§ 51.9a-8 *Crush test for Grades A and B tubes.* When required by the inspector, crushing tests shall be made on sections of tubes two and one-half inches in length which shall stand crushing longitudinally without cracking, splitting, or opening at the weld, as follows:

Wall thickness of tubes, inches	Height of crushed section, inches
0.135 and under	¾, or until the outside folds are in contact.
Over 0.135	1¼.

Slight surface checks shall not be cause for rejection.*

§ 51.9a-9 *Tensile properties.* (a) Grade C tubes shall conform to the following requirements as to tensile properties:

Tensile strength, minimum, psi	60,000
Yield point, minimum, psi	37,000
Elongation in 2 inches, minimum, percent	25

(b) No tensile properties are specified for Grade D tubes, but for purposes of design, the following tensile properties may be assumed:

Tensile strength, minimum, psi	47,000
Yield point, minimum, psi	26,000
Elongation in 2 inches, minimum, percent	35

*

§ 51.9a-10 *Flaring test, for Grade D tubes.* A section of tube approximately four inches in length shall stand being flared with a tool having a sixty degree included angle until the tube at the mouth of the flare has been expanded to the following percentages, without cracking or showing flaws:

Ration of inside diameter to outside diameter:	*Minimum expansion of inside diameter, percent*
0.9	20
0.8	22
0.7	25
0.6	30
0.5	37
0.4	50
0.3	67

*

§ 51.9a-11 *Hardness test, for Grade D tubes.* (a) For tubes 0.200 inch and over in wall thickness the Brinell hardness test shall be used and on tubes having wall thicknesses from 0.200 to 0.375 inches exclusive, a 10-mm. ball with a 1500-kg. load, or a 5-mm. ball with a 750 kg. load may be used at the option of the inspector. For tubes less than 0.200 inch in wall thickness, the Rockwell hardness test shall be used.

(b) The Brinell hardness test may be made on the outside of the tube near the end or on the outside of a specimen cut from the tube, at the option of the inspector. The Rockwell hardness test shall be made on the inside of a specimen cut from the tube.

(c) The tubes shall have a Brinell hardness number not to exceed 125 and a Rockwell hardness number not to exceed B72.

(d) In making the Brinell hardness test, reference should be made to the Standard Method of Test for Brinell Hardness of Metallic Materials (A. S. T. M. Designation: E 10-27) of the American Society for Testing Materials.

(e) In making the Rockwell hardness test, reference should be made to the Standard Method of Test for Rockwell Hardness of Metallic Materials (A. S. T. M. Designation: E 18-36) of the American Society for Testing Materials.*

§ 51.9a-12 *Hydrostatic Test.*—(a) *Grades A, B, and C tubes.* Tubes under five inches in diameter shall withstand an internal hydrostatic pressure of 1,000 psi., and tubes five inches and over in diameter shall withstand an internal hydrostatic pressure of 800 psi., provided the fiber stress corresponding to these pressures does not exceed 16,000 psi. for Grades A and B and 18,000 psi. for Grade C, as determined by the following formula. Should the fiber stress corresponding to these pressures exceed the above figures, the hydrostatic test pressure shall be determined by the following formula:

$$P=\frac{2St}{D}$$

where:
P equals hydrostatic test pressure in pounds per square inch,
S equals allowable fiber stress of 16,000 psi. for Grades A and B tubes and 18,000 psi. for Grade C tubes.
t equals thickness of the tube wall in inches, and
D equals outside diameter of the tube in inches.

(b) *Grade D tubes.* Prior to upsetting, swaging, expanding, bending, or other forming operations, each tube shall be tested at the mill to the hydrostatic pressures prescribed in the following table, provided that the fiber stress calculated in accordance with the following formula does not exceed 20,800 psi.:

$$P=\frac{2St}{D}$$

NOTE: Letters in formula have same significance as in § 51.9a-12 (a).

Hydrostatic Test Pressure

Size, outside diameter, inches:	*Hydrostatic test pressure, psi.*
Under 1	1,000
1 to 1½, exclusive	1,500
1½ to 2, exclusive	2,000
2 and over	2,500

(c) All grade tubes. Tubes shall be struck near both ends, while under test pressure, with a two-pound steel hand hammer or its equivalent.*

§ 51.9a-13 *Test specimens.* (a) Test specimens required for the flattening, flange, and flaring tests specified in §§ 51.9a-6, 51.9a-7, 51.9a-10 shall be taken from the ends of finished tubes prior to upsetting, swaging, expanding, or other forming operations, or being cut to length. They shall be smooth on the ends and free from burrs and flaws.

(b) If desirable, and practicable, tension tests may be made on full sections of the tubes up to the capacity of the testing machine. For larger size tubes, the tension test specimen shall consist of a strip cut longitudinally from the tube and not flattened between gage marks. The sides of the specimen shall be parallel between gage marks; the width, irrespective of the thickness, shall be 1 inch; the gage length shall be two inches.

(c) All specimens shall be tested at room temperature.*

§ 51.9a-14 *Number of tests.* (a) For Grades A and B, one of each of the tests specified in §§ 51.9a-6 (a), (b), (d), 51.9a-7, and 51.9a-8 shall be made on each of two tubes from each lot of 250 tubes or fraction thereof, and from each 2000 feet or fraction thereof of safe-end material. For Grade C, one of each of the tests specified in §§ 51.9a-6 (c), (d), 51.9a-7, and 51.9a-9 shall be made on each of two tubes from each lot of 250 tubes or fraction thereof.

(b) If any of the test specimens specified in paragraph (a) shows defective machining or develops flaws, it may be discarded and another specimen substituted.

(c) If the percentage of elongation of any tension test specimen is less than that specified in § 51.9a-9 and any part of the fracture is more than three-fourths inch from the center of the gage length, as indicated by scribe scratches marked on the specimen before testing, a retest shall be allowed.

(d) For Grade D tubes, four tubes shall be selected for test from each lot of 100 tubes. From each end of two of these test tubes, the flattening test specified in § 51.9a-6 (b) shall be made and from each end of the other two test tubes the flaring test specified in § 51.9a-10 shall be made.

(e) Five percent of all Grade D tubes shall be selected and a hardness test shall be made on each of these tubes as specified in § 51.9a-11.

(f) All tubes of all grades shall be subjected to the hydrostatic test specified in § 51.9a-12.*

§ 51.9a-15 *Retests.* If the results of the physical tests of any lot do not conform to the requirements specified in §§ 51.9a-6, 51.9a-7, 51.9a-8, 51.9a-9, 51.9a-10, and 51.9a-11, retests may be made on additional tubes of double the original number from the same lot, each of which shall conform to the requirements specified.*

§ 51.9a-16 *Forming operations.* Tubes when inserted in the boiler shall

stand expanding and beading without showing cracks or flaws, or opening at the weld. Superheater tubes when properly manipulated shall stand all forging, welding, and bending operations necessary for application without developing defects.*

§ 51.9a–17 *Finish.* Finished tubes shall be reasonably straight and have smooth ends free from burrs. They shall be free from injurious defects and shall have a workmanlike finish.*

§ 51.9a–18 *Marking*—(a) *Grades A, B, and C tubes.* The name or brand of the manufacturer, the type of material from which it is made, the words Electric-Resistance-Welded and whether steel or open-hearth iron, together with the hydrostatic test pressure in pounds per square inch, shall be legibly stenciled on each tube 1¼ inch in outside diameter and over, provided the length is not under three feet.

(b) *Grade D tubes.* The name or brand of the manufacturer, the words Electric-Resistance-Welded Steel, A. S. T. M. Specification A 226, together with the hydrostatic test pressure in pounds per square inch, shall be legibly stenciled on each tube 1¼ inches and over in outside diameter, provided the length is not under three feet.

(c) *All grades of tubes.* On tubes less than 1¼ inches in diameter and on all tubes under three feet in length, the information specified in paragraphs (a) and (b) shall be marked on a tag securely attached to the bundle or box in which the tubes are shipped.*

Seamless Steel Boiler Tubes for High-Pressure Service—Medium-Carbon Seamless Steel Boiler and Superheater Tubes—Carbon-Molybdenum Alloy-Steel Boiler and Superheater Tubes

NOTE: In substantial agreement with A. S. T. M. designations A 192–40, A 210–40, and A 209–41T Certified Material—Class B.

§ 51.10–1 *Scope.* These specifications cover seamless steel boiler tubes for high-pressure service, medium-carbon seamless steel boiler and superheater tubes, and seamless carbon-molybdenum alloy-steel boiler and superheater tubes.*

§ 51.10–2 *Process.* The steel shall be killed steel and shall be made by either or both of the following proceses: open-hearth or electric-furnace.

§ 51.10–3 *Manufacture.* (a) Tubes shall be made by the seamless process and shall be either hot-finished or cold-drawn, as specified.

(b) Cold-drawn tubes shall be annealed after the final cold-draw pass.

(c) Hot-finished tubes for high-pressure service need not be annealed unless specified by the purchaser.

(d) Hot-finished medium-carbon tubes shall be annealed by heating to at least 1300° F.

(e) Hot-finished carbon-molybdenum tubes shall be annealed or normalized and drawn.*

§ 51.10–4 *Chemical Composition.* The steel shall conform to the following requirements as to chemical composition:

	High pressure	Medium carbon
Carbon, percent	0.08 to 0.18	0.35
Manganese, percent	.30 to .60	.80
Phosphorous, max., percent	.04	.04
Sulphur, max., percent	.045	.045
Silicon, max., percent	.25	----------
Silicon, min., percent	----------	.10
Silicon, percent	----------	----------
Molybdenum, percent	----------	----------

	Carbon-molybdenum	
	Grade T1	Grade T1a
Carbon, percent	0.10 to 0.20	0.15 to 0.25
Manganese, percent	.30 to .60	.30 to .60
Phosphorous, max., percent	.04	.04
Sulphur, max., percent	.05	.05
Silicon, max., percent	----------	----------
Silicon, min., percent	----------	----------
Silicon, percent	.10 to .60	.10 to .60
Molybdenum, percent	.45 to .65	.45 to .65

*

§ 51.10–5 *Check analysis.* At the request of the inspector an analysis as specified in the following table shall be made by the manufacturer on samples of finished tubing selected at random and shall conform to the requirements specified in § 51.10–4. Drillings for analysis shall be taken from several points around each tube selected for analysis.

Size of tube:	*Number of samples selected*
2 in. and over in diameter and 0.200 in. and over in wall thickness.	2 from each lot of 100 tubes or fraction thereof.
Less than 2 in. in diameter or any size less than 0.200 in. in wall thickness.	2 from each lot of 250 tubes or fraction thereof.

(b) If the analysis of either tube does not conform to the requirements specified, an analysis of two additional tubes from the same lot shall be made, each of which shall conform to the requirements specified in § 51.10–4.*

§ 51.10–6 *Tensile properties.* (a) The material shall conform to the following requirements as to tensile properties:

	Medium carbon	Carbon-molybdenum	
		Grade T1	Grade T1a
Tensile strength, min., psi	60,000	55,000	60,000
Yield point, min., psi	37,000	30,000	32,000
Elongation in 2 in., min., percent	25	30	30

No tensile properties are specified for tubes for high-pressure service, but for purposes of design the following tensile properties may be assumed:

Tensile strength, min., psi	47,000
Yield point, min., psi	26,000
Elongation in 2 in., min., percent	35

(b) The yield point shall be determined by the drop of the beam or halt in the gage of the testing machine, or by the use of dividers or other approved method, at a crosshead speed not to exceed ⅛ in. per min. When a definite yield point is not exhibited, the yield strength corresponding to a limited permanent offset of 0.2 percent of the gage length of the specimen shall be reported instead.*

§ 51.10–7 *Flattening test*—(a) *High-pressure boiler tubes.* A section of tube 2½ in. in length shall stand being flattened between parallel plates, without cracking or showing any flaws, until the distance between the plates is four times the wall thickness. Superficial ruptures as a result of minor surface imperfections shall not be cause for rejection.

(b) *Medium-carbon tubes.* (1) For tubes having wall thicknesses not exceeding 10 percent of their outside diameters, a section not less than 2½ in. in length shall stand being flattened between parallel plates until the distance between the plates is five times the wall thickness, without cracking or showing flaws.

(2) For tubes having wall thicknesses exceeding 10 percent of their outside diameters, a section not less than 2½ in. in length shall stand being flattened between parallel plates until the distance between the plates is seven times the wall thickness, without cracking or showing flaws.

(3) Superficial ruptures as a result of minor surface imperfections shall not be cause for rejection.

(c) *Carbon-molybdenum tubes.* (1) For tubes having wall thicknesses not exceeding 10 percent of their outside diameters, a section not less than 2½ in. in length shall stand being flattened between parallel plates until the distance between the plates is three times the wall thickness, without cracking or showing flaws.

(2) For tubes having wall thicknesses exceeding 10 percent of their outside diameters, a section not less than 2½ in. in length shall stand being flattened between parallel plates until the distance between the plates is four times the wall thickness, without cracking or showing flaws.

(3) Superficial ruptures as a result of minor surface imperfections shall not be cause for rejection.*

§ 51.10–8 *Flaring test.* A section of tube approximately four inches in length shall stand being flared with a tool having a sixty degree included angle until the tube at the mouth of the flare has

been expanded to the following percentages, without cracking or showing flaws.

Ratio of inside diameter to outside diameter:[a]	*Minimum expansion of inside diameter, percent*
0.9	20
0.8	22
0.7	25
0.6	30
0.5	37
0.4	50
0.3	67

[a] In determining the ratio of inside diameter to outside diameter, the inside diameter shall be defined as the actual inside diameter of the materal tested.

*

§ 51.10–9 *Hardness test.* (a) For tubes 0.200 inch and over in wall thickness the Brinell hardness test shall be used and on tubes having wall thicknesses from 0.200 to 0.375 inch, exclusive, a 10-mm. ball with 1,500-kg. load, or a 5-mm. ball with 750-kg. load may be used, at the option of the manufacturer. For tubes less than 0.200 inch in wall thickness, the Rockwell hardness test shall be used, except that for medium-carbon and carbon-molybdenum tubes with wall thicknesses of less than 0.065 inch in wall thickness, no hardness tests are required.

(b) The Brinell hardness test may be made on the outside of the tube near the end or on the outside of a specimen cut from the tube, at the option of the manufacturer. The Rockwell hardness test shall be made on the inside of a specimen cut from the tube except in the case of tubes furnished with upset, swaged, or otherwise formed ends in which case it shall be made on the outside of the tubes near the end after forming operations.

(c) The tubes shall have a hardness number not to exceed the following:

Tubes for High-Pressure Service

	Brinell hardness number (Tubes 0.200 in. and over in wall thickness)	*Rockwell hardness number (Tubes less than 0.200 in. in wall thickness)*
Hot-finished tubes	137	B77
Cold-drawn tubes	125	B72
Hot-finished tubes (annealed)	125	B72

Medium-Carbon Tubes

The tubes shall have a Brinell hardness number not to exceed 143 and a Rockwell hardness number not to exceed B79.

Carbon-Molybdenum Tubes

	Brinell hardness number (tubes 0.200 in. and over in wall thickness)	*Rockwell hardness number (tubes less than 0.200 in. in wall thickness)*
Grade T1	137	B77
Grade T1a	143	B79

(d) In making the Brinell hardness test, reference should be made to the Standard Method of Test for Brinell Hardness of Metallic Materials (A. S. T. M. Designation: E 10) of the American Society for Testing Materials.

(e) In making the Rockwell hardness test, reference should be made to the Standard Method of Test for Rockwell Hardness of Metallic Materials (A. S. T. M. Designation No. E 18) of the American Society for Testing Materials.*

§ 51.10–10 *Hydrostatic test.* Prior to upsetting, swaging, expanding, bending, or other forming operations, each tube shall be tested at the mill to the hydrostatic pressures prescribed in the following table, provided that the fiber stress calculated in accordance with the following formula does not exceed 16,000 psi. in the case of tubes for high pressure and 24,000 psi. for medium-carbon and carbon-molybdenum tubes.

$$P=\frac{2St}{D}$$

where:

P equals hydrostatic test pressure in pounds per square inch,
S equals allowable fiber stress of 16,000 psi. for high pressure tubes and 24,000 psi. for medium-carbon and carbon-molybdenum tubes,
t equals thickness of the tube wall in inches, and
D equals outside diameter of the tube in inches.

Hydrostatic Test Pressure

Size, outside diameter, inches:	*Hydrostatic test pressure, psi.*
Under 1	1,000
1 to 1½, exclusive	1,500
1½ to 2, exclusive	2,000
2 and over	2,500

*

§ 51.10–11 *Test specimens*—(a) *Tubes for high-pressure service.* (1) Test specimens required for the flattening and flaring tests specified in §§ 51.10–7 and 51.10–8 shall be taken from the ends of finished tubes prior to upsetting, swaging, expanding, or other forming operations, or being cut to length. They shall be smooth on the ends and free from burrs and flaws.

(2) All specimens shall be tested at room temperature.

(b) *Medium-carbon and carbon-molybdenum tubes.* (1) Test specimens required for the flattening and flaring tests specified in §§ 51.10–7 and 51.10–8 shall be taken from the ends of finished tubes prior to upsetting, swaging, expanding, or other forming operations, or being cut to length. They shall be smooth on the ends and free from burrs and flaws.

(2) If desirable and practicable, tension tests may be made on full sections of the tubes up to the capacity of the testing machine. For larger size tubes, the tension test specimen shall consist of a strip cut longitudinally from the tube and not flattened between the gage marks. The sides of the specimen shall be parallel between the gage marks; the width, irrespective of the thickness shall be one inch; the gage length shall be two inches.

(3) On tubes furnished with upset, swaged, or otherwise formed ends, the hardness test specified in § 51.10–9 shall be made on the outside of the tubes near the end after the forming operations.

(4) All specimens shall be tested at room temperature.*

§ 51.10–12 *Number of tests.* (a) Five percent of all tubes shall be selected and a hardness test shall be made on each of these tubes as specified in § 51.10–9.

(b) Each tube shall be subjected to the hydrostatic test specified in § 51.10–10.

(c) *Flattening and flaring tests*—(1) *Tubes for high-pressure service.* From each lot of 100 tubes or fraction thereof, four tubes shall be selected for test. From each end of two of these test tubes, the flattening test specified in § 51.10–7 shall be made and from each end of the other two test tubes the flaring test specified in § 51.10–8 shall be made.

(2) *Medium-carbon and carbon-molybdenum tubes.* From each heat-treated lot of finished tubes, two tubes shall be selected at random for the flattening and flaring tests specified in §§ 51.10–7 and 51.10–8. The flattening test shall be made on each end of one of these tubes. The flaring test shall be made on each end of the remaining tubes. For the purpose of calculating the number of tests on tubes heat-treated by the continuous process, the number of tubes in a heat-treated lot shall be determined from the size of the tubes as follows:

Size of tube:	*Size of lot*
2 inches and over in outside diameter and 0.200 inch and over in wall thickness	Not more than 50 tubes.
Less than 2 inches but over one inch in outside diameter or over 1 inch in outside diameter and under 0.200 inch in wall thicknesses	Not more than 75 tubes.
1 inch or less in outside diameter	Not more than 125 tubes

(d) *Tension tests (where required).* (1) From each group of 100 finished tubes or fraction thereof, two tubes shall be selected at random for the tension test specified in § 51.10–6.

(2) If any test specimen shows defective machining or develops flaws, it may be discarded and another specimen substituted.

(3) If the percentage of elongation of any test specimen is less than that specified in § 51.10–6 (a) and any part of the fracture is more than three-quarters inch from the center of the gage length, as indicated by scribe scratches marked on the specimen before testing, a retest shall be allowed.*

§ 51.10–13 *Retests.* If the results of the physical tests of any lot do not conform to the requirements specified in §§ 51.10–6, 51.10–7, 51.10–8, and 51.10–9, retests may be made on additional tubes of double the original number from the same lot, each of which shall conform to the requirements specified.*

§ 51.10–14. *Retreatment.* If individual tubes or tubes selected to represent any group or lot of medium-carbon or carbon-molybdenum tubes fail to conform to the test requirements specified in §§ 51.10–6, 51.10–7, 51.10–8, and 51.10–9, the individual tubes or group or lot represented may be retreated and resubmitted for test. Only two reheat treatments will be permitted.*

§ 51.10–15. Forming operations. Tubes when inserted in the boiler shall stand expanding and beading without showing

cracks or flaws. Superheater tubes when properly manipulated shall stand all forging, welding, and bending operations necessary for application without developing defects.*

§ 51.10–16 *Permissible variations in dimensions and weight.* Variations in outside diameter, wall thickness, weight and length, from those specified, shall not exceed the amounts prescribed in the table shown in § 51.9–14.*

§ 51.10–17 *Finish.* Finished tubes shall be reasonably straight, and have smooth ends free from burrs. They shall be free from injurious defects and shall have a workmanlike finish. Minor defects may be removed by grinding provided the wall thicknesses and the outside diameters are not decreased to less than that permitted in § 51.10–16.*

§ 51.10–18 *Marking.* (a) The name or brand of the manufacturer, the type of material from which it is made (Seamless steel, medium-carbon, or carbon-molybdenum steel, as the case may be), together with the hydrostatic test pressure in pounds per square inch, and whether hot-finished or cold-drawn, shall be legibly stenciled on each tube 1¼ inches in outside diameter and over, provided the length is not under three feet.

(b) On tubes less than 1¼ inches in diameter and on all tubes under three feet in length, the information specified in paragraph (a) shall be marked on a tag securely attached to the bundle or box in which the tubes are shipped.*

Steel Pipe

NOTE: In substantial agreement with A. S. T. M. Designations A 106–41 and A 206–41 T. Certified material—Class B.

§ 51.11–1 *Scope.* These specifications cover one grade of lap-welded steel pipe, two grades of seamless steel pipe, and one grade of seamless carbon-molybdenum alloy-steel pipe.*

§ 51.11–2 *Process*—(a) *Material.* The steel for lap-welded pipe shall be of good weldable quality made by the open-hearth process. All seamless pipe shall be made of killed steel by either or both of the following processes: open-hearth or electric-furnace.

(b) *Welded pipe.* Pipe 2 inches and over in nominal diameter may be made by the lap-weld process.

(c) *Seamless pipe.* All pipe 1½ inches and under in nominal diameter shall be made by the seamless process and pipe more than 1½ inches in nominal diameter may be made by the seamless process. Seamless pipe shall be furnished either hot-finished or cold-drawn and annealed.

(d) *Carbon-molybdenum pipe.* (1) Pipe under 2 inches in nominal diameter may be furnished either hot-finished or cold-drawn and annealed. This anneal shall consist of heating in a furnace to from 1,200° to 1,300° F. followed by cooling in the furnace at a rate not to exceed 50° F. per hour until below 1,000° F.

(2) Pipe 2 inches and over in nominal diameter shall be furnished hot-finished followed by a stress-relief anneal. This stress-relief anneal shall consist of heating in a furnace to approximately 1,300° F. followed by furnace cooling at a rate not to exceed 50° F. per hour until below 1,000° F.*

§ 51.11–3 *Chemical composition.* (a) The steel shall conform to the following requirements as to chemical composition:

	Welded	Grade A	Grade B	Carbon-molybdenum P1
Carbon, percent		0.25 max.	0.35 max.	0.10 to 0.20
Manganese, percent	0.30 to 0.60	0.30 to 0.90	0.35 to 1.00	.30 to .60
Phosphorous, max., percent	.045	.04	.04	.04
Sulphur, max., percent	.06	.06	.06	.05
Silicon, percent			0.10 min.	.10 to .60
Molybdenum, percent				.45 to .65

(b) *Check analysis.* (1) Analysis of 2 pipes from each lot, as specified below, shall be made by the manufacturers from the finished pipe.

Nominal Diameter, inches	Welded, A and B	Carbon-molybdenum P1
Under 2		400 or fraction thereof.
2 to 5 inclusive	400 or fraction thereof.	200 or fraction thereof.
6 and over	200 or fraction thereof.	100 or fraction thereof.

(2) Drillings for analysis shall be taken from several points around each pipe selected for analysis. The chemical composition thus determined shall conform to the requirements prescribed in paragraph (a).*

§ 51.11–4 *Tensile requirements.* (a) The material shall conform to the following requirements as to tensile properties at room temperature:

	Welded open hearth	Seamless		Carbon-Molybdenum—P1
		Grade A	Grade B	
Tensile strength, min. psi	45,000	**48,000	**60,000	**55,000
Yield point, min. psi	25,000	30,000	35,000	30,000
Elongation, min. percent:				
8 inches	22			
2 inches		35	25	30

**For transverse tension tests the material shall conform to these minimum tensile requirements except that the elongation in 2 inches shall be 25 percent for Grade A, 15 percent for Grade B, and 20 percent for carbon-molybdenum.

(b) The yield point shall be determined by the drop of the beam or the halt in the gage of the testing machine, or by the use of dividers or other approved method, at a crosshead speed not to exceed one-eighth inch per minute. When a definite yield point is not exhibited, the yield strength, corresponding to a limiting permanent offset of 0.2 percent of the gage length of the specimen shall be used instead. The tensile strength shall be determined at a crosshead speed not to exceed 1½ inches per minute.*

§ 51.11–5 *Bending properties.* Seamless pipe 2 inches and under in nominal diameter shall stand being bent cold through 90° around a cylindrical mandrel, the diameter of which is twelve times the nominal diameter of the pipe without developing cracks. When ordered for close coiling, the pipe shall stand being bent cold through 180° around a cylindrical mandrel, the diameter of which is eight times the nominal diameter of the pipe, without failure.

Carbon-molybdenum and Grade A seamless steel pipe should be used for close-coiling, cold-bending, or forge welding.*

§ 51.11–6 *Flattening tests.* (a) For welded pipe, the crop end cut from each end of each length of pipe shall be flattened cold between parallel plates with the weld located 90° from the line of direction of the applied force, until the opposite walls of the pipe meet. No opening in the weld shall take place until the distance between the plates is less than two-thirds of the original outside diameter of the pipe. No cracks or breaks in the metal elsewhere than in the lap-weld shall occur until the distance between the plates is less than one-third of the original outside diameter of the pipe.

(b) For Grade A seamless pipe over 2 inches in nominal diameter, a section of pipe not less than 2½ inches in length shall be flattened cold between parallel plates until the opposite walls of the pipe meet. No cracks or breaks in the metal shall occur until the distance between the plates is less than one-third of the outside diameter of the pipe, but in no case shall the distance be less than five times the thickness of the pipe wall.

(c) For Grade B and alloy-steel seamless pipe over 2 inches in nominal diameter, a section of pipe not less than 2½ inches in length shall be flattened cold between parallel plates until the opposite walls of the pipe meet. No cracks or breaks in the metal shall occur until the distance between the plates is less than one-half the outside diameter of the pipe but in no case shall the distance be less than seven times the thickness of the pipe wall.*

§ 51.11–7 *Hydrostatic test.* (a) Each length of pipe shall be tested by the manufacturer to a hydrostatic pressure which will produce in the pipe wall a stress of 50 percent of the minimum specified yield point at room temperature, determined by the following formula:

$$P=\frac{2St}{D}$$

where:

P equals hydrostatic test pressure in pounds per square inch,
S equals 0.50 times the minimum specified yield point at room temperature in pounds per square inch,
t equals nominal wall thickness in inches, and
D equals outside diameter in inches.

(b) The maximum hydrostatic test pressure shall not exceed 2,500 psi. for nominal sizes 3 inches and under, or 2,800 psi. for all nominal sizes over 3 inches. The test pressure shall be maintained for not less than 5 seconds.*

§ 51.11–8 *Test procedure*—(a) *Test specimens.* (1) Specimens cut longitudinally or in the case of seamless pipe, either longitudinally or transversely, shall be acceptable for the tension test. Tension test specimens from welded pipe shall be taken at a point approximately 90° from the weld.

(2) The longitudinal tension test may be made in full section of the pipe up to the capacity of the testing machine. For larger sizes, the tension test specimens shall consist of strips cut from the pipe. The width of these specimens shall be 1½ inches and they shall have a gage length of 8 inches for welded pipe and 2 inches for seamless pipe. For seamless pipe when the pipe wall thickness exceeds three-fourths inch, the tension test specimen shown in Figure M–2 shall be used. Longitudinal tension test specimens shall not be flattened between gage marks. The sides of the specimen shall be parallel between gage marks.

(3) The transverse tension test may be made on seamless pipe 8 inches and over in nominal diameter. Specimens may be taken from a ring cut from the pipe or from sections resulting from the flattening tests. The specimens shall consist of a strip cut transversely from the pipe; the width of the specimen shall be 1½ inches and its gage length 2 inches. When the pipe wall thickness exceeds three-fourths inch, the tension test specimen shown in Figure M–2 shall be used. Specimens cut from the ring section shall be flattened cold and heat-treated in the same manner as the pipe and shall be parallel between gage marks. The transverse tension test specimens may be machined off on either surface provided not over 15 percent of the nominal thickness is removed from either side.

(4) Test specimens for the bend and flattening tests shall consist of sections cut from a pipe. Specimens for flattening tests shall be smooth on the ends and free from burrs, except when made on crop ends.

(5) All routine check tests shall be made at room temperature.

(b) *Number of tests.*—(1) *Welded.* The longitudinal tension test specified in § 51.11–4 shall be made on one length of pipe from each lot of 400 lengths or fraction thereof of each size under 6 inches, and from each lot of 200 lengths or fraction thereof of each size 6 inches and over.

The flattening test specified in § 51.11–6 shall be made on both crop ends cut from each length of welded pipe.

(2) *Seamless pipe.* One of either of the tests specified in § 51.11–4 shall be made on one length of pipe from each lot of 400 lengths or fraction thereof of each size under 6 inches, and from each lot of 200 lengths or fraction thereof of each size 6 inches and over.

The flattening test specified in § 51.11–6 (b) or (c) shall be made on one length of pipe from each lot of 400 lengths or fraction thereof of each size over 2 inches up to but not including 6 inches and from each lot of 200 lengths or fraction thereof, of each size 6 inches and over.

For Grades A and B pipe, 2 inches and under in nominal diameter, the bend test specified in § 51.11–5 shall be made on one pipe from each lot of 400 lengths or fraction thereof of each size.

(3) *Carbon-molybdenum pipe.* Tests shall be made as follows on one pipe from each heat treated lot, but in no case on less than 5 percent of the lot:

The transverse or longitudinal tension test specified in § 51.11–4,

The bend test specified in § 51.11–5 for pipe 2 inches and under in nominal diameter, and

The flattening test specified in § 15.11–6 (c) for pipe over 2 inches in nominal diameter.

For material heat treated by the continuous process, the tests specified in this paragraph shall be made on each pipe in a lot constituting 5 percent of the pipe ordered, but on not less than 2 pipes.

(4) Each length of welded, seamless, and carbon-molybdenum pipe shall be subjected to the hydrostatic test specified in § 51.11–7.

(5) If any test specimen shows defective machining or develops flaws, it may be discarded and another specimen substituted.

(6) If the percentage of elongation of any test specimen is less than that specified in § 51.11–4 (a) and any part of the fracture is more than three-fourths from the center of the gage length, as indicated by scribe scratches marked on the specimen before testing, a retest shall be allowed. If a specimen breaks in an inside or outside surface flaw, a retest shall be allowed.

(c) *Retests*—(1) *Welded and seamless steel pipe.* If the results of any chemical or physical tests of any lot[1] do not conform to the requirements specified in §§ 51.11–3, 51.11–4, 51.11–5, and 51.11–6, retests shall be made on additional pipe of double the original number from the same lot, each of which shall conform to the requirements specified.

Should a crop end of a finished welded or seamless pipe fail in the flattening test, one retest may be made from the failed end. Pipe may be normalized either before or after the first test, but pipe shall be subjected to only two normalizing treatments.

(2) *Carbon-molybdenum pipe.* If the result of the chemical analysis specified in § 51.11–3 (b) does not conform to the requirements of § 51.11–3 (a), an analysis of each pipe from the same lot may be made, and all pipe conforming to the requirements shall be accepted.

If the results of any physical tests of any lot[1] do not conform to the requirements specified in §§ 51.11–4, 51.11–5, and 51.11–6, retests shall be made on additional pipes of double the original number from the same lot, each of which shall conform to the requirements specified.

If the individual lengths of pipe selected to represent any lot fail to conform to the test requirements specified in §§ 51.11–4, 51.11–5, and 51.11–6, the lot may be reheat treated and resubmitted for test, except that any individual lengths which meet the requirements before retreating will be accepted.*

[1] A lot shall consist of all the pipe of the same size and wall thickness from any one melt.

§ 51.11–9 *Finish and Marking.* (a) The finished pipe shall be reasonably free from injurious defects, and shall have a workmanlike finish. Variations in outside diameter shall not exceed the following:

Nominal pipe size (inches)	Permissible variation in outside diameter (inches)	
	Over	Under
⅛ to 1½, incl	1/64 (0.015)	1/32 (0.031)
2 to 4, incl	1/32 (0.031)	1/32 (0.031)
5 to 8, incl	1/16 (0.062)	1/32 (0.031)

The minimum wall thickness at any point shall not be more than 12.5 percent under the nominal wall thickness specified.

(b) Each length of pipe manufactured in accordance with these specifications shall be legibly marked, either by stenciling, stamping, or rolling, with the manufacturer's name or brand, together with the grade of material.

Welded Wrought-Iron Pipe

NOTE: In substantial agreement with A. S. T. M. Spec. A 72–39. Certified Material—Class B.

§ 51.12–1 *Material and purpose.* There shall be but one grade. It may be required in any of the commercial standard thicknesses according to the purpose to be served. Butt-welded pipes will not be accepted over 2 inches in diameter. All pipes may be lap-welded. The pipe shall be made from wrought-iron[1] free from any admixture of iron scrap or steel. The term "scrap" applies only to foreign or bought scrap, and does not include local mill products free from foreign or bought scrap. All pipe must be of coiling or bending quality. All nipples furnished with pipe shall be of the same quality of material as the pipe. The finished pipe shall be reasonably straight and free from injurious defects. All burrs at the ends of pipe shall be removed.*

§ 51.12–1a *Chemical composition.* The iron shall conform to the following requirement as to chemical composition:

Manganese, max., percent	0.05

*

§ 51.12–2 *Tensile properties.* The material shall have the following tensile properties:

Tensile strength, min. lbs. per sq. in.	40,000
Yield point, min. do	24,000
Elongation in 8 inches, min. percent	12

*

§ 51.12–3 *Fracture tests.* A section of pipe 6 inches in length shall be flattened until broken by repeated light blows of

[1] Definition: Wrought iron is a ferrous metal, aggregated from a solidifying mass of pasty particles of highly refined metallic iron, with which, without subsequent fusion, is incorporated a minutely and uniformly distributed quantity of slag.

a hammer or by pressure; the fracture developed shall have a fibrous appearance.*

§ 51.12–4 *Bend tests.* For pipe 2 inches or under in diameter, a sufficient length of coiling or bending pipe shall stand being bent cold through 90°, around a cylindrical mandrel the diameter of which is 15 times the nominal diameter of the pipe, without developing cracks at any portion and without opening the weld. Double extra strong pipe over 1¼ inches in nominal size need not be subjected to the bend test.*

§ 51.12–5 *Test specimens.* (a) Tension test specimens may be of full section or strips cut longitudinally from the pipe. The sides of specimens shall be parallel and not flattened between gage marks.

(b) For pipe up to and including 2 inches in nominal size, tension test specimens shall be of the full section of the pipe. For pipe larger than 2 inches in nominal size, the tension test specimens may be strips not less than three-quarters inch in width, cut longitudinally from the pipe. The sides of such specimens shall be parallel and not flattened between gage marks.

(c) All specimens shall be tested at room temperature.*

§ 51.12–6 *Number of tests.* (a) One of each of the tests specified in §§ 51.12–2 to 51.12–4 may be made on a length in each lot of 500 lengths or fraction thereof, of each size.

(b) Each length shall be subjected to the hydrostatic test specified in § 51.12–7.*

§ 51.12–7 *Hydrostatic tests.* Each length of pipe shall be tested at the mill to a hydrostatic test pressure specified in the following table. Pipe 2 inches and larger in diameter, shall be jarred near one end while under test pressure.

Hydrostatic pressure for welded wrought-iron pipe (pressures expressed in pounds per square inch)

Size (nominal inside diameter) (inches)	"Standard weight" pipe lap-weld	"Extra" strong" pipe lap-weld	"Double extra strong" pipe lap-weld
⅛			
¼			
⅜			
½			
¾			
1			
1¼	1,000	2,500	
1½	1,000	2,500	3,000
2	1,000	2,500	3,000
2½	1,000	2,000	3,000
3	1,000	2,000	3,000
3½	1,000	2,000	2,500
4	1,000	2,000	2,500
5	1,000	1,800	2,000
6	1,000	1,800	2,000
8	800		2,000
8	1,000	1,500	
10	600		
10	700		
10	900	1,000	
12	600		
12	800	1,000	

NOTE: For pipes over 12 inches in inside diameter, the test pressure should be calculated by the formula:

$$P = \frac{2St}{D}$$

where:
P equals pressure in pounds per square inch;
S equals 12,000 pounds per square inch (fiber stress)
t equals thickness of wall in inches;
D equals outside diameter in inches.

*

§ 51.12–8 *Permissible variations and dimensions.* For pipe 1½ inches or under in nominal size, the outside diameter at any point shall not be more than one-sixty-fourth inch over nor more than one-thirty-second inch under the standard outside diameter. For pipe 2 inches or over in nominal size, the outside diameter shall not be more than 1 percent over or under the standard outside diameter. Unless otherwise specified, pipe shall conform to the following regular practice:

(a) Standard weight pipe shall be in random lengths from 16 to 22 feet, but not more than 5 percent of the total number of lengths may be "jointers", which are two pieces coupled together. When ordered with plain ends 5 percent may be in lengths of 12 to 16 feet.

(b) Extra strong pipe shall be in random lengths of 12 to 22 feet and 5 percent may be in lengths of 6 to 12 feet.

(c) Each end of standard-weight pipe shall be threaded. Extra strong and double extra strong pipe shall be furnished with plain ends.

(d) All threads shall be in accordance with the American standard pipe thread, cut so as to make a tight joint when the pipe is tested at the mill to the specified internal hydrostatic pressure.*

§ 51.12–9 *Inspection and rejection.* Each length of pipe which develops injurious defects in shop working or application will be rejected, and the manufacturer shall be notified.*

§ 51.12–10 *Marking.* The name or brand of the manufacturer, the words "wrought-iron" or approved abbreviation therefor, and the pressure in pounds at which it was tested shall be legibly stenciled on each pipe.*

Seamless Brass Pipe

NOTE: In substantial agreement with A. S. T. M. Designation No. B 43–41. Certified material—Class B.

§ 51.13–1 *Scope.* These specifications cover seamless muntz metal, high brass, admiralty metal, and red brass pipe suitable for steam, water, compressed air, sanitary, and boiler feed lines, and for similar purposes subject to temperatures not exceeding 406° F.*

§ 51.13–2 *Process.* The pipe shall be cold-drawn to size.*

§ 51.13–3 *Temper.* All pipe shall normally be furnished in the annealed condition. The degree of anneal shall be sufficient to show complete recrystallization and to enable the pipe to meet the test requirements.*

§ 51.13–4 *Chemical requirements.* The material shall conform to the following requirements as to chemical composition:

	Muntz metal	High brass	Admiralty metal	Red brass
Copper, percent	59.00 to 63.00	65.00 to 68.00	70.00 to 73.00	83.00 to 86.00
Lead, max. percent	0.50	0.80	0.075	0.06
Iron, max. percent	.07	.07	.06	.05
Tin, percent			0.90 to 1.20	0.15 max.
Zinc	Remainder	Remainder	Remainder	Remainder

*

§ 51.13–5 *Sampling for chemical analysis.* Drillings, millings, or clippings, for analysis shall be taken from pipe representing 0.5 percent of the shipment. Equal quantities shall be taken from each pipe and thoroughly mixed together.*

§ 51.13–6 *Expansion test.* Annealed pipe shall stand an expansion of 25 percent of the inside diameter without cracking, when expanded by a tapered pin having a 60° included angle.*

§ 51.13–7 *Strain test.* A test specimen 6 inches in length shall stand, without cracking, immersion for 15 minutes in an aqueous mercurous nitrate solution containing 100 grams of mercurous nitrate and 13 milliliters of nitric acid (sp. gr. 1.42) per liter of solution.*

§ 51.13–8 *Threading test.* The pipe shall stand threading in a satisfactory manner.*

§ 51.13–9 *Bending properties.* In case of pipe required for bending, annealed full sections of the pipe shall stand being bent cold through 180° around a pin the diameter of which is one and one-half times the inside diameter of the pipe, without cracking on the outside of the bent portion.*

§ 51.13–10 *Hydrostatic test.* Each length of pipe shall stand, without showing weakness or defects, an internal hydrostatic pressure sufficient to subject the material to a fiber stress of 7,000 psi., determined by the following formula for thin hollow cylinders under tension. No pipe shall be tested beyond 1,000 psi. unless so specified.

$$P = \frac{2St}{D}$$

where:
P equals test pressure in psi.,
t equals thickness of wall in inches,
D equals outside diameter of pipe in inches, and
S equals 7,000.

*

§ 51.13–11 *Number of tests.* A sufficient number of pipes for purpose of tests shall be taken at random to constitute 0.5 percent of the shipment. One expansion test and one strain test shall be made on each pipe so selected.*

§ 51.13–12 *Workmanship.* The pipe shall be commercially round and shall be free from cracks, slivers, scale, and other surface defects.*

§ 51.13–13 *Finish.* All pipes shall be bright annealed or acid cleaned after final annealing.*

§ 51.13–14 *Rejection.* (a) If a specimen of piping fails to meet the requirements of §§ 51.13–6 to 51.13–10, inclusive, two additional specimens may be taken, but both of these specimens shall conform to these requirements, otherwise the pipe will be rejected.

(b) Pipes that show non-uniform annealing under handling shall be rejected from the lot.*

Seamless Copper Pipe

NOTE: In substantial agreement with A. S. T. M. Designation B 42-41T. Certified Material—Class B.

§ 51.14-1 *Scope.* These specifications cover seamless copper tubing and seamless copper pipe in all standard pipe sizes to be used at temperatures not exceeding 406° F. This material is suitable for boiler-feed lines, blow-off lines, compressed air lines, salt and fresh water lines, and for saturated steam lines for pressures not exceeding 180 lbs. per square inch gage pressure. The pipe shall be commercially round and shall be free from cracks, seams, slivers, scale, and other surface defects.*

§ 51.14-2 *Process.* The pipe shall be cold-drawn to size.*

§ 51.14-3 *Condition or temper.* (a) All pipe shall be normally furnished in the hard-drawn condition.

(b) When pipe is required for bending, the pipe shall be furnished with a proper bending temper.*

§ 51.14-4 *Chemical composition.* The copper shall conform to the following requirements as to chemical composition:

Copper,[1] min., percent	99.90
Phosphorous, max., percent	0.040

[1] Silver counting as copper.

*

§ 51.14-5 *Sampling for chemical analysis.* Drillings, millings, or clippings, for analysis shall be taken from pipe representing 0.5 percent of the shipment. Equal quantities shall be taken from each pipe and thoroughly mixed.*

§ 51.14-6 *Expansion test.* Annealed pipe selected for test shall withstand an expansion of 25 percent of the inside diameter when expanded by a tapered pin having a 60° included angle.*

§ 51.14-7 *Bending properties.* In the case of pipe required for bending, annealed full sections of the pipe shall stand being bent cold through 180° around a pin the diameter of which is one and one-half times the inside diameter of the pipe, without cracking on the outside of the bent portion. This test shall be made in addition to the expansion test specified in § 51.14-6 and shall apply only to sizes 2 inches and under in outside diameter.*

§ 51.14-8 *Microscopic examination.* The pipe shall be made from copper that is free from cuprous oxide as determined by microscopic examination at a 75X magnification.*

§ 51.14-9 *Hydrostatic test.* Each length of pipe shall stand, without showing weakness or defects, an internal hydrostatic pressure sufficient to subject the material to a fiber stress of 6,000 psi. determined by the following formula for thin hollow cylinders under tension. No pipe shall be tested beyond a hydrostatic pressure of 1,000 psi. unless so specified.

$$P = \frac{2St}{D}$$

where:
P equals pressure in pounds per square inch,
t equals thickness of pipe wall in inches,
D equals outside diameter of the pipe in inches, and
S equals allowable unit stress of the material, 6,000 psi.

*

§ 51.14-10 *Number of tests.* (a) A sufficient number of pipes for purpose of tests shall be taken at random to constitute 0.5 percent of the shipment. One expansion test shall be made on each pipe so selected.

(b) If any specimen fails to conform to the requirements of §§ 51.14-6 to 51.14-9, inclusive, two additional specimens may be taken, each of which shall conform to the requirements specified.*

Steel Forgings

NOTE: In substantial agreement with A. S. T. M. Designations A 105-40 and A 182-40. Certified material—Class B.

§ 51.15-1 *Scope.* (a) These specifications cover forged or rolled steel pipe flanges, forged fittings, and valves and parts for high-temperature service. The term "forgings" used in these specifications shall be understood to cover one or all of the products mentioned above, either forged or rolled.

(b) Three grades of material are covered, designated Grades A, B, and F1, respectively, and are classified in accordance with their chemical and physical properties as specified in §§ 51.15-6 and 51.15-7 (a).

(c) Grades A and B material are suitable for use in connection with temperatures up to and including 850° F. Grade F1 material is suitable for use in connection with temperatures up to and including 1,000° F.*

§ 51.15-2 *Process.* The steel may be made by the electric-furnace, open-hearth, or other approved process.*

§ 51.15-3 *Discard.* A sufficient discard shall be made from each ingot to secure freedom from injurious piping and undue segregation. In the case of F1 steel, it shall have a homogeneous structure as shown by the macro-etch test in § 51.15-12.*

§ 51.15-4 *Manufacturing practice.* (a) Material for forging shall consist of blooms, billets, slabs, or bars either forged or rolled from an ingot, and cut to the required length by a process that will not produce injurious defects in the forging.

(b) Forging or rolling operations may be performed either by hammering, pressing, rolling, extruding, or upsetting. Forgings shall be brought as nearly as practicable to the finished shape and size by hot-working and shall be so processed as to cause metal flow during the hot-working operation in the direction most favorable for resisting the stresses encountered in service.*

§ 51.15-5 *Heat treatment.* (a) All forgings shall receive a heat treatment proper to their design and chemical composition.

(b) Heat treatment shall be performed before machining except in instances where reheat-treating is necessary.

(c) The steels may be full annealed, normalized, full annealed and normalized, or full annealed and normalized followed by tempering.

(d) *Full annealing.* The procedure for full annealing shall consist in allowing the forgings, immediately after forging or rolling, to cool to a temperature below the critical range, under suitable conditions to prevent injuries by too rapid cooling. They shall then be uniformly reheated to the proper temperature and for the required time to refine the grain, and cooled slowly thereafter in the furnace or in lime. The forgings shall not be removed from the furnace or the lime until a metal temperature of approximately 500° F. has been attained.

(e) *Normalizing.* The procedure for normalizing shall consist in allowing the forgings, immediately after forging or rolling, to cool to a temperature below the critical range, under suitable conditions to prevent injuries by too rapid cooling. They shall then be uniformly reheated to the proper temperature and held there a sufficient time to refine the grain (a group thus reheated being known as a "normalizing charge"), followed by cooling in still air at room temperature.

(f) *Tempering or drawing.* The procedure for tempering or drawing shall consist in reheating the forgings to a temperature at least 100° F. above the temperature to be encountered in service, but in no case shall the drawing temperature be lower than 850° F. The material shall be held at the required temperature for not less than one hour per inch of thickness at the thickest section, followed by cooling in the furnace or in still air.*

§ 51.15-6 *Chemical composition.* The steels shall conform to the following requirements as to chemical composition:

	Grades A and B	Grade F1
Carbon, percent	(**)	0.35
Manganese, max., percent	0.90	0.30 to 0.80
Phosphorous, max., percent	.05	.04
Sulphur, max., percent	.05	.05
Silicon, percent		.20 to 0.50
Molybdenum, percent		.40 to 0.60

**When flanges will be subject to fusion welding, the carbon content shall not exceed 0.35 percent. When the carbon is restricted to 0.35 percent, max., it may be necessary to add silicon to the composition for Grade B and for the heavier thicknesses of Grade A flanges in order to meet the required tensile properties. The silicon content shall not exceed 0.30 percent.

*

§ 51.15-7 *Tensile properties.* (a) The material shall conform to the following requirements as to tensile properties:

	Grade A	Grade B	Grade F1
Tensile strength, min., psi	60,000	70,000	70,000
Yield point, min., psi	30,000	36,000	45,000
Elongation in 2 inches, min., percent	25	22	25
Reduction of area, min., percent	33	30	35

(b) The yield point shall be determined by the drop of the beam or halt in the gage of the testing machine, or by use of dividers at a crosshead speed not to exceed one-eighth inch per minute. Where a definite yield point is not exhibited, in the case of F1 steel, the yield strength corresponding to a limiting permanent offset of 0.2 percent of the gage length of the specimen shall be used instead. The "offset method" of determining yield strength as described in the Tentative Methods of Tension Testing of Metallic Materials (A. S. T. M. Designation: E 8-40T) of the American

Society for Testing Materials, shall be followed. The tensile strength shall be determined at a speed of head not to exceed 1½ inches per minute.

(c) The yield strength, where given, shall be determined by an extensometer reading to 0.0002 inch. The extensometer shall be attached to the specimen at the gage marks and not to the shoulders of the specimen not to any part of the testing machine.*

§ 51.15–8 *Hydrostatic tests.* Valve bodies or fittings and other pressure containing parts shall be tested after machining to the hydrostatic test pressures specified in tables P–10 and P–11.*

§ 51.15–9 *Test specimens.* (a) The tension test specimens taken from the forgings, billets or bars shall be machined to the form and dimensions shown in Figure M–2 except as specified in paragraph (b).

(b) In the case of small sections which will not permit of taking the standard test specimen specified in paragraph (a), the tension test specimen shall be as large as feasible and its dimensions shall be proportional to those shown in Figure M–2. The gage length for measuring elongation shall be four times the diameter of the specimen.

(c) For purposes of tests, the necessary extra forgings or test bars shall be provided. The test specimen if cut from a flange shall be cut tangentially from the flange portion approximately midway between the inner and outer surfaces and approximately midway between the front and back faces. When it is impracticable to provide extra forgings for test purposes, test bars may be made from the billet or bar, provided they are given approximately the same reduction and heat treatment as the forgings.*

§ 51.15–10 *Number of tests.* (a) One tension test at room temperature shall be made from each melt in each heat-treatment charge.

(b) If any test specimen shows defective machining, it may be discarded and another specimen substituted from the same melt and heat-treatment charge.

(c) If the percentage of elongation of any test specimen is less than that prescribed in § 51.15–7 (a) and any part of the fracture is more than three-fourths inch from the center of the gage length, as indicated by scribe scratches marked on the specimen before testing, a retest shall be allowed.*

§ 51.15–11 *Retests.* If any of the results of the phyical tests of any test lot do not conform to the requirements specified, the manufacturer may re-treat such lots but not more than twice and retests shall be made as in § 51.15–10 (a).*

§ 51.15–12 *Macro-etch tests.* In case of questions as to the soundness of material in any lot of forgings and its suitability for the intended service, a macro-etching test shall be made for each melt present in the lot. Etching tests shall show sound and reasonably uniform material, free from injurious laminations, cracks, segregations, and similar objectionable defects. If on successive tests 10 percent of any melt fail to pass the requirements of the macro-etch test, all forgings from that melt shall be rejected.*

§ 51.15–13 *Workmanship and finish.* (a) The forgings shall conform to the sizes and shapes specified.

(b) They shall be free from injurious defects and shall have a workmanlike finish.*

§ 51.15–14 *Marking.* Identification marks shall be stamped legibly on each forging.*

Alloy-Steel Bolting Material

NOTE: In substantial agreement with A. S. T. M. Designation No. A 96–39. Certified material—Class B.

§ 51.16–1 *Scope.* This specification covers alloy-steel bolting material for boiler and pressure vessel parts or attachments, valves, flanges, and fittings for high-temperature service to 1000° F.

Three grades of material are covered, viz: A, B, and C, according to the chemical and physical properties hereinafter specified. Any alloy conforming to these requirements shall be acceptable.*

§ 51.16–2 *Process.* The steel shall be made by one or more of the following processes: open-hearth, electric-furnace, or crucible.*

§ 51.16–3 *Heat treatment.* (a) Heat treatment shall consist of quenching and tempering.

(b) Immediately after rolling or forging, the bolting material shall be allowed to cool to a temperature below the critical range under suitable conditions, to prevent injury by too rapid cooling. For quenching and tempering, the material shall then be uniformly reheated to the proper temperature to refine the grain and quenched in some medium under substantially uniform conditions for each quenching charge. The material shall then be uniformly reheated to the proper temperature for tempering or "drawing back" and allowed to cool uniformly.*

§ 51.16–4 *Chemical composition.*

Phosphorous, percent	Not over 0.045
Sulphur, percent	Not over 0.05

NOTE: It is recommended that the carbon content shall not be less than 0.20 nor more than 0.45 percent, and that the carbon ranges shall be 0.10 percent of carbon.

*

§ 51.16–5 *Tensile properties.* The bolting material, after final heat treatment, shall conform to the following requirements as to minimum tensile properties:

Diameter in inches	Grade A	Grade B	Grade C
2½ and under, tensile strength lbs. per sq. in	95,000	105,000	125,000
Yield points lb. per sq. in	70,000	80,000	105,000
Elongation in 2 in. percent	20	20	16
Reduction of area percent	50	50	50
Over 2½ to 4 incl. tensile strength—lbs. per sq. in	90,000	100,000	115,000
Yield point lbs. per sq. in	65,000	75,000	95,000
Elongation in 2 in., percent	20	20	16
Reduction of area, percent	50	50	45
Over 4 to 7, incl. tensile strength—lbs. per sq. in	90,000	100,000	110,000
Yield point, lbs. per sq. in	65,000	75,000	85,000
Elongation in 2 in., percent	20	20	16
Reduction of area, percent	50	50	45

*

§ 51.16–6 *Brinell hardness test.* The bolting material, after final heat treatment, shall conform to the following requirements:

	Brinell hardness Nos.
Grade A	190–250
Grade B	210–270
Grade C	260–320

*

§ 51.16–7 *Workmanship and finish.* The bolting material shall be free from injurious defects and shall have a workmanlike finish.*

§ 51.16–8 *Nuts and washers.* Bolts and studs shall be equipped with nuts conforming to the Standard Specifications for Carbon and Alloy-Steel Nuts for Bolts for High-Temperature Service to 1,000° F. as specified in §§ 51.16a–1 to 51.16a–9. If washers are used under nuts they shall be of forged or rolled steel. All washers shall be free from injurious defects and have a workmanlike finish.*

Carbon and Alloy-Steel Nuts for High-Temperature Service

NOTE: In substantial agreement with A. S. T. M. Designation A 194–40. Certified material—Class B.

§ 51.16a–1 *Scope.* (a) These specifications cover steel nuts for bolts used in high-temperature service up to 1,000° F.

(b) Four classes of material are covered:

Class 1 for service temperatures not exceeding 750° F.
Class 2 and 2H for service temperatures not exceeding 850° F.
Class 4 for service temperatures up to and including 1,000° F.

*

§ 51.16a–2 *Process.* The steel shall be made by one or more of the following processes: open-hearth, electric-furnace, or acid-bessemer.*

§ 51.16a–3 *Fabrication.* (a) Classes 1 and 2 nuts shall be made by the hot-forged or cold processes, or machined from forged or hot-rolled bars.

(b) Classes 2H and 4 nuts shall be made by the hot-forged or cold processes, or machined from hot-forged or hot-rolled bars and shall be heat treated to meet the requirements for physical properties. These classes of nuts shall be quenched and drawn at a temperature at least 100° F. above the service temperature, but in no case less than 850° F. for Class 2H and not less than 1,100° F. for Class 4 nuts.*

§ 51.16a–4 *Stress-relieving.* (a) Before tapping, all nuts made by the cold

process shall be heated in the process of manufacturing to a temperature of at least 1,000° F.

(b) Nuts made by the hot process or from hot-forged or hot-rolled bars need not be subjected to this stress relieving.*

§ 51.16a–5 *Chemical composition.* Nuts shall conform to the following requirements as to chemical composition:

CHEMICAL REQUIREMENTS

	Class 1	Classes 2 and 2H	Class 4
Carbon, percent	0.15 min.	0.40 min.	0.40 to 0.50
Manganese, percent			.50 to 0.95
Phosphorus, max., percent	.05	.05	.04
Sulphur, max., percent	.05	.05	.04
Silicon, percent			.15 min.
Molybdenum, percent			.20 min.

*

§ 51.16a–6 *Hardness test.* Samples of each class of nuts shall show the Brinell hardness specified below: (1) in the finished condition; (2) after the sample has been subjected for 24 hours to a temperature of 850° F. for Class 1, 1,000° F. for Classes 2 and 2H, and 1,100° F. for Class 4, and then cooled slowly:

BRINELL HARDNESS

Class	Sample nut as finished	Sample nut after treatment as above
1	120 min.	120 min.
2	160 min.	160 min.
2H	248 to 352	180 min.
4	248 to 352	200 min.

*

§ 51.16a–7 *Drift test.* Classes 2H and 4 nuts when machined from bar stock and all other classes of nuts shall be capable of meeting the following drift test: A conical mandrel, part of which has a diameter equal to the nominal nut size, shall be forced through the tapped hole to the nominal nut size, cold, without cracking the body of the nut. The test may be continued until the nut is broken for the examination of the structure.*

§ 51.16a–8 *Stripping test.* Nuts of all classes shall be capable of meeting the following stripping test: A nut shall be assembled on a piece of bolting material held in a tension testing machine so that a load is supplied to the nut. The threads in the nut shall not strip when subjected to a stress equal to 130,000 psi. for Class 1, and 150,000 psi. for Classes 2, 2H, and 4 figured from the diameter of the bolt.*

§ 51.16a–9 *Finish.* (a) Nuts shall be free from injurious defects and shall have a workmanlike finish.

(b) Nuts shall be semi-finished, hexagonal in shape and in accordance with the dimensions for the Regular or Heavy Series of the American Standard for Wrench-Head Bolts and Nuts and Wrench Openings (ASA No.: B 18.2–1933).

(c) Nuts for use with alloy-steel bolts or bolt studs shall be threaded unless otherwise specified, in accordance with the American Standard for Screw Threads (ASA No.: B 1.1–1935); sizes one inch and smaller in diameter with the Coarse-Thread Series.*

Steel Castings

NOTE: In substantial agreement with A. S. T. M. Designations Nos. A 95–41 and A 157–41. Certified material—Class B.

§ 51.17–1 *Scope.* These specifications cover steel castings for valves, flanges, fittings, or other pressure containing parts, of carbon-steel for service temperatures up to and including 850° F. and carbon-molybdenum alloy-steel for service temperatures to 1000° F.*

§ 51.17–2 *Process.* The steel shall be made by the open-hearth, electric-furnace, or crucible process.*

§ 51.17–3 *Heat treatment.* (a) All castings shall receive a heat treatment proper to their design and chemical composition.

(b) Heat treatment shall consist of full annealing or of normalizing, or of normalizing followed by full annealing, or of normalizing followed by drawing to a temperature below the critical range. No castings which have been quenched in any liquid medium shall be offered under these specifications.

(c) *Full annealing.* The procedure for full annealing shall consist in allowing the castings to cool, after pouring, to a temperature below the critical range, reheating to the proper temperature and for the required time to refine the grain, and cooling thereafter slowly in the furnace. The castings shall not be removed from the furnace until the pyrometer shows that the furnace has fallen to a temperature below 500° F. (260° C.).

(d) *Normalizing.* The procedure for normalizing shall consist in allowing the castings to cool, after pouring, to a temperature below the critical range, reheating to the proper temperature and for the required time to refine the grain, and cooling in still air at room temperature.

(e) *Drawing or tempering.* The procedure for drawing, or tempering, shall consist in reheating the castings to a temperature at least 150° F. (85° C.) above the temperature to be encountered in service, and holding at that temperature not less than one and one-half hours per inch or less of section, followed by cooling in the furnace or in still air. When castings are used for service at temperatures under 750° F., the minimum draw temperature shall be 800° F.*

§ 51.17–4. *Chemical composition.* The steel shall conform to the following requirements as to chemical composition:

	Carbon steel	Carbon molybdenum alloy-steel C1
Carbon, percent	0.15 to 0.45	0.35 max.
Manganese, percent	.50 min.	1.00 max.
Phosphorous, percent	.05 max.	.05 max.
Sulphur, percent	.06 max.	.06 max.
Silicon, percent	.20 min.	.20 min.
Molybdenum, percent		.40 min.

*

§ 51.17–5 *Tensile properties.* (a) Steel used for the castings shall conform to the following requirements as to tensile properties:

	Carbon steel	Carbon Molybdenum alloy-steel C1
Tensile strength min. psi	70,000	70,000
Yield point min. psi	36,000	45,000
Elongation in 2 in. min. (percent)	22	22
Reduction of area min. (percent)	30	35

(b) The yield point shall be determined by the drop of the beam or halt in the gage of the testing machine, or by the use of dividers, at a crosshead speed not to exceed ⅛ inch per minute. Where a definite yield point is not exhibited, the yield strength corresponding to a limiting permanent offset of 0.2 percent of the gage length of the specimen shall be used instead. The "offset method" of determining yield strength as described in the Tentative Methods of Tension Testing of Metallic Materials (A. S. T. M. Designation: E 8–40T) of the American Society for Testing Materials shall be followed. The tensile strength shall be determined at a speed of head not to exceed 1½ inches per minute.*

§ 51.17–6. *Bending properties.* The test specimens shall stand being bent cold through an angle of 90° around a pin 1 inch in diameter without cracking on the outside of the bent portion.*

§ 51.17–7 *Hydrostatic tests.* Each casting shall be tested after machining to the hydrostatic pressure specified in table P–10 or P–11 and shall show no leaks.*

§ 51.17–8 *Test specimens.* (a) For castings having a net weight of not over 500 lbs., tension test specimens and, when specified, bend test specimens shall be taken from test bars attached to special blocks. For castings having a net weight over 500 lbs., the test specimens shall be taken from test bars attached to the castings where practicable. If the design of the casting is such that test bars should not be attached to the castings, the test bars shall be cast attached to special blocks. Test bars from which tension and bend test specimens are to be taken shall remain attached to the castings or blocks they represent until presented for inspection, and shall be heat treated with the castings. Test bars shall be provided in sufficient numbers to furnish specimens for the tests required in § 51.17–9.

(b) Tension test specimens may be cut from heat treated castings instead of from test bars.

(c) Tension test specimens shall be machined to the form and dimensions shown in Figure M–2.

(d) Bend test specimens shall be machined to one by one-half inch in section with the corners rounded to a radius not over one-sixteenth inch.*

§ 51.17–9 *Number of tests.* (a) One tension test and one bend test shall be made from each melt in each heat-treat-

ment charge and from each casting weighing 500 lbs. net or over.

(b) If any test specimen shows defective machining or develops flaws, it may be discarded, and another specimen substituted from the same lot.

(c) If the percentage of elongation of any tension test specimen is less than that specified in § 51.17-5 (a) and any part of the fracture is more than three-fourths inch from the center of the gage length, as indicated by scribe scratches marked on the specimen before testing, a retest shall be allowed.*

§ 51.17-10 *Retests.* (a) If the results of the physical tests for any lot do not conform to the requirements specified such lot may be reheat-treated, but not more than twice. Retests shall be made as specified in §§ 51.17-5 and 51.17-6.*

§ 51.17-11 *Workmanship.* (a) The castings shall conform substantially to the shapes and sizes indicated by the patterns and drawings submitted by the purchaser.*

§ 51.17-12 *Finish.* (a) The castings shall be clean and free from injurious defects.

(b) The castings shall not be peened or plugged to stop leaks.

(c) *Repair by welding.* Defects which do not impair the strength of the castings may be welded by an approved process. The defects shall be cleaned out to solid metal before welding, and, when so required by the inspector, the castings in this condition shall be submitted to him for his approval. All castings shall be heat treated after welding in accordance with the requirements specified in § 51.17-3, except that with permission of the inspector, castings with minor welds need only be drawn or tempered. In the case of major repair welds, the inspector may require examination after reannealing with X-rays or gamma rays to show the adequacy of the repair, the cost of X-raying or gamma-raying to be borne by the manufacturer, notice of such to be given at the time permission is granted to weld.*

Gray Iron Castings for Valves, Flanges, and Pipe Fittings

NOTE: In substantial agreement with A. S. T. M. Designation A 126-40. Certified material—Class B.

§ 51.18-1 *Scope.* These specifications cover the following three grades of gray iron for castings such as valve bodies, fittings, flanges, including parts to be assembled into valves, manufactured in advance and supplied for sale from stock by the manufacturer, jobber, or other dealer:

Grade A—Regular gray iron,
Grade B—Higher-strength gray iron including the so-called semi-steels used in valves and fittings,
Grade C—High-test cast iron whether regular or alloy composition.

*

§ 51.18-2 *Process.* The iron shall be made by the cupola, air-furnace, electric-furnace, or other approved process. The iron shall be produced under regular chemical and physical control and shall be gray iron of high quality.*

§ 51.18-3 *Chemical composition.* Drillings taken from test ingots, broken test specimens, or from castings shall conform to the following requirements as to chemical composition:

Phosphorus, max. percent	0.75
Sulphur, max. percent	.12

*

§ 51.18-4 *Tensile properties.* (a) The tension test specimen shall conform to the following requirements as to tensile strength:

	Grade A	*Grade B*	*Grade C*
Tensile strength, min. psi	21,000	31,000	41,000

(b) After reaching a stress of 15,000 psi., the speed of the crosshead of the testing machine shall not exceed one-eighth inch per minute.*

§ 51.18-5 *Transverse test.* (a) The transverse test shall be optional. When transverse tests are made, the transverse test specimen, when placed horizontally upon supports twelve inches apart and tested under a centrally applied load shall conform to the following requirements:

	Grade A	*Grade B*	*Grade C*
Load at center, min. lbs	2,200	3,300	4,000
Deflection at center, min. in	0.10	0.12	0.12

(b) The rate of application of the load shall be such that a central deflection of 0.10 inch is produced in from 20 to 40 seconds.

(c) In case the transverse test specimen varies from the specified diameter of 1.20 inches, a correction factor conforming to the following shall be applied:

Diameter of transverse test specimen, inches:	*Correction factor*
1.10	0.770
1.11	.791
1.12	.813
1.13	.835
1.14	.857
1.15	.880
1.16	.903
1.17	.927
1.18	.951
1.19	.975
1.20	1.000
1.21	1.025
1.22	1.051
1.23	1.077
1.24	1.103
1.25	1.130
1.26	1.158
1.27	1.185
1.28	1.214
1.29	1.242
1.30	1.271

*

§ 51.18-6 *Mold.* One mold containing one or more tension test specimens and, when desired, one transverse test specimen shall be poured at least twice a day from each melt from which castings are made under these specifications. The molds for these test specimens shall be made from the plate pattern, on a standard molding machine if possible, from the same lot of sand and in the same general way as that in which molds for the castings are made. Each specimen shall be marked to show cupola or furnace number, date, and hour when the mold is poured by either casting in the mold or tamping the specimens as soon as possible after shaking-out.

NOTE: The numbering on the test specimen shown in Figure M-6 is intended simply to illustrate a method of designation. In the particular method shown 12/8 refers to December 8, B1 is the cupola number, and the numeral 1 which follows shows the hour cast. (1 P.M.)

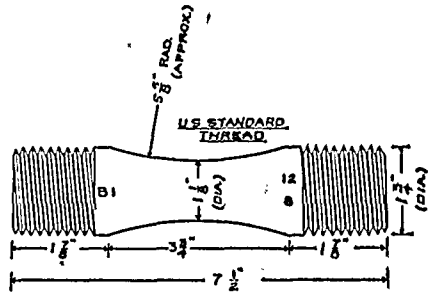

FIG. M-6.—Standard form of test specimen required for tension tests of gray iron casting materials.

*

§ 51.18-7 *Test specimens.* Tension test specimens shall conform to the dimensions shown in Figure M-6, shall be reasonably smooth and round at breaking section, and shall be tested without machining, except that the enlarged ends shall be threaded (1¾ inches U. S. standard threads are recommended). The cross-sectional area at the breaking section shall be within plus or minus 5 percent of one square inch and the ultimate stress shall be calculated on the minimum cross-section.*

§ 51.18-8 *Tension test apparatus.* Ball and socket specimen holders or spherical-seated bearings or other device, which will insure that the specimen, when under load, will be as nearly as possible in pure axial tension without transverse stress, shall be used in making the tension test.*

§ 51.18-9 *Records.* Records of the chemical composition of the iron and physical properties of the test specimens shall be systematically made and maintained.*

§ 51.18-10 *Workmanship and finish.* The castings shall be sound, clean, free from sand, of workmanlike finish, and soft enough to machine well.*

Malleable Iron Castings

NOTE: In substantial agreement with A. S. T. M. Spec. A 47-33. Certified material—Class B.

§ 51.19-1 *Material and scope.* This specification covers malleable iron castings which may be used for pipe fittings, valves, manifolds, connections, and miscellaneous appliances for steam pressures not exceeding 250 lbs., and temperatures not exceeding 450° F., but such castings shall not be used as pressure parts of boilers or pressure vessels. (Malleable iron castings are designated as Grade A and Grade B.)*

§ 51.19-2 *Process.* (a) Grade A castings shall be made by the air-furnace, open-hearth, or electric-furnace process.

(b) Irrespective of the process by which the castings are made they shall be free from primary graphite, or what is known in the trade as a "frame" and the manufacturer shall certify that no primary graphite is present in any part of the casting sections.

(c) Castings having a "frame" i. e., a hard surface shell shall be rejected.

NOTE: The normal structure of malleable iron consists of crystalline grains of ferrite throughout which is distributed small nodules of temper carbon. At times, due to an incorrect annealing cycle, the castings will be surrounded by a more or less thick shell of metal in which the carbon will be combined to form the constituent known as pearlite. As this constituent is much harder than ferrite, the shell of metal, or "frame" will be harder and more brittle than the core of metal it surrounds, and consequently less able to safely stand dynamic stresses.

*

§ 51.19–3 *Tensile properties.* The tensile test specimens shall conform to the following minimum requirements:

Tensile strength, lbs. per sq. in.	52,000
Yield point, lbs. per sq. in.	32,500
Elongation in 2 inches, percent	15

*

§ 51.19–4 *Test specimens.* The specimens shall be of the form shown in Figure M–7. Specimens whose minimum diameter at the smallest section is less than 19/32 inch shall not be accepted.*

§ 51.19–5 *Number of tests.* (a) A set of three tension-test specimens shall be cast from each melt, without chills, using heavy risers of sufficient height to secure sound bars. Each set of specimens so cast shall be annealed with the castings they represent.

(b) If the first specimen conforms to the specified requirements, or if, in the event of the failure of the first specimen, the second and third specimens conform to the requirements, the castings of the lot they represent shall be accepted, except that any casting may be rejected if its test lug shows that it has not been properly annealed. If either the second or third specimen fails to conform to the requirements, the entire lot of castings they represent shall be rejected unless failure of one of the retest specimens shall be due to a flaw, in which case test specimens may, at the discretion of the inspector, be cut from castings in the lot for an additional test.*

§ 51.19–6 *Special tests.* (a) All castings, if of sufficient size, shall have cast thereon test lugs of a size proportonal to the thickness of the castings but not exceeding five-eighths inch by three-quarter inch in cross section. On castings which are 24 inches or over in length a test lug shall be cast near each end. These lugs shall be attached to the casting at such a point that they will not interfere with the assembling of the casting and shall be broken off by the inspector.

(b) If required by the inspector, a casting shall be tested to destruction. Such a casting shall show good tough malleable iron.*

§ 51.19–7 *Reannealing.* Any castings rejected for insufficient annealing may be reannealed once. The reannealed castings shall be inspected, and if the remaining test lugs, or castings broken as specimens, show the castings to be thoroughly annealed, they shall be accepted; if not, they shall be finally rejected.*

§ 51.19–8 *Workmanship and finish.* (a) The castings shall conform substantially to the approved patterns or drawings, and also to gages which may be specified in individual cases. The castings shall be made in a workmanlike manner. A variation of one-eighth inch per foot will be permitted.

(b) The castings shall be free from injurious defects at surface or in any cross section.*

§ 51.19–9 *Marking.* The manufacturer's identification mark shall be cast on all castings of sufficient size, in such positions that they will not interfere with the assembling of the casting, and especially so located that the marks will not operate to weaken the metal at a point where the stresses imposed on the casting will be more severe than at other sections. For castings with flanged outlets it is recommended that the marking be cast on the periphery of the flange.*

§ 51.19–10 *Inspection and rejection.* (a) The manufacturer shall be required to keep a record of each melt from which castings are produced, showing tensile strength and elongation of test specimens cast from such melts. These records shall be available and shown to the inspector whenever required.

(b) Castings which show injurious defects subsequent to their acceptance at the manufacturer's works may be rejected and, if rejected, the manufacturer shall be notified.*

Malleable Iron Castings for Pipe Fittings

NOTE: In substantial agreement with A. S. T. M. Designation A 197–39. Certified material—Class B.

§ 51.19–11 *Cupola malleable iron.* This specification covers malleable iron for castings such as flanges, pipe fittings, and valve parts, including parts to be assembled or manufactured in advance and supplied from stock by the manufacturer, for pressures not exceeding 125 lbs., temperatures not exceeding 450° F., and diameters not exceeding 4 inches.*

§ 51.19–12 *Grade B castings.* Grade B castings may be manufactured by the cupola process, and shall be produced under regular chemical and physical control.*

§ 51.19–13 *Tensile properties.* (a) The tensile test specimens shall conform to the following requirements:

Tensile strength, lbs. per sq. in.	40,000
Yield point, lbs. per sq. in.	30,000
Elongation in 2 inches, percent	5.0

(b) The yield point shall be determined by the drop of the beam or the halt in the gage of the testing machine.*

§ 51.19–14 *Test specimens.* (a) Tension test specimens shall be of the form and dimensions as shown in Figure M–7.

(b) Specimens whose mean diameter at the smallest section is less than 19/32 inch shall be discarded.

(c) *Records.* Manufacturers shall keep records of the chemical composition and physical properties of the test specimens which shall be available to the inspectors.*

§ 51.19–15 *Requirements.* The requirements of § 51.19–2 (b) relative to primary graphite and "framed" castings shall apply to this process.*

§ 51.19–16 *Workmanship and finish.* (a) The castings shall conform substantially to the approved patterns or drawings, and also to gages which may be specified in individual cases. The castings shall be made in a workmanlike manner. A variation of one-eighth inch per foot will be permitted. The castings shall be free from injurious surface or internal defects.

(b) Malleable iron products subject to steam pressure shall be marked with the manufacturer's name or trade-mark to indicate that they are the product of an approved manufacturer. The marking shall be made in accordance with the requirements of § 51.19–9.

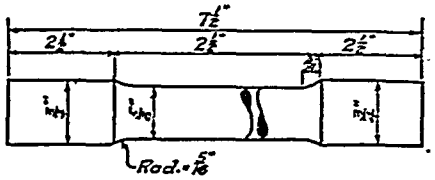

FIG. M–7.—Standard form of test specimen required for tension-tests of malleable casting material.

*

Bronze Castings

NOTE: In substantial agreement with A. S. T. M. Designations B 62–41 and B 61–41 and B 60–41. Certified material—Class B.

§51.20–1 *Materials and purposes.* Three grades of castings shall be permissible, viz:

Grade A for pressure containing parts of valves and pipe fittings which are subjected to working pressures up to 150 lbs. per square inch or temperatures not exceeding 366° F.

Grade B for pressure containing parts of valves and pipe fittings, also boiler mountings, expansion joints, and similar appliances which are subjected to steam pressures up to 300 lbs. or temperatures not exceeding 450° F., and for hydraulic or compressed air service at higher pressures where the temperature does not exceed 150° F.

Grade C for bolts, nuts, and light-pressure vessels where comparatively great tensile strength and resistance to salt-water corrosion are required.*

§51.20–2 *Manufacture.* (a) The alloy may be made by any approved method.

(b) The castings shall be of uniform quality.*

§ 51.20–3 *Chemical composition.* The alloy shall conform to the following requirements as to chemical composition:

CHEMICAL COMPOSITION

	Grade A			Grade B	Grade C		
	Minimum	Desired	Maximum		Minimum	Desired	Maximum
Copper, percent	84.00	85.00	86.00	86.5 (min.)	86.00	88.00	89.00
Tin, percent	4.00	5.00	6.00	5.5 to 6.5	7.50	8.00	11.00
Lead, percent	4.00	5.00	6.00	1.0 to 2.0		None	0.30
Zinc, percent	4.00	5.00	6.00	2 to 5	1.50	4.00	4.50
Iron, percent			.25	0.25 (max.)			.25
Nickel, percent			1.00	1.00 (max.)			1.00
Phosphorous, percent			.05	0.05 (max.)			.05

*

§ 51.20–4 *Chemical analysis.* The sample for chemical analysis shall be taken from the test bars.*

§ 51.20–5 *Tensile properties.* (a) The alloy shall conform to the following requirements as to tensile properties:

	Grade A	Grade B	Grade C
Tensile strength, min. psi	30,000	34,000	38,000
Yield point, min. psi	14,000	16,000	16,000
Elongation in 2 in., min. percent	20	22	22

(b) The yield point in tension shall be determined as the stress producing an elongation under load of 0.5 percent, that is, 0.01 in. in a gage length of 2 in.*

§ 51.20–6 *Test specimens.* (a) The tension test specimen shall be machined from a coupon to the form and dimensions shown in Figure M–2.

(b) The coupon attached to the casting shall conform to the dimensions shown in Figure M–8 and it shall not be chilled. The fin gate along the side shall be not less than 5/16 in. in thickness at any point along its length.

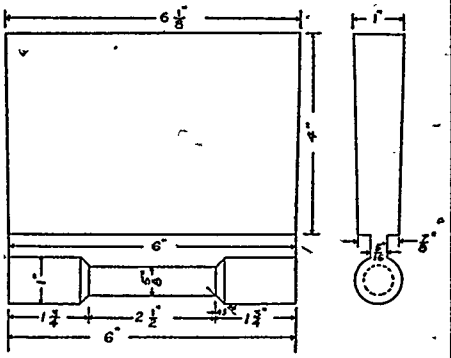

FIG. M–8.—Test specimen coupon.

*

§ 51.20–7 *Number of tests.* (a) Each casting weighing 250 lbs. or more shall have, if practicable, at least one test coupon attached. The responsibility of furnishing sufficient test specimens shall rest with the manufacturer.

(b) In the case of castings weighing less than 250 lbs. each, at least one test coupon shall, if practicable, be attached to one or more castings from each melt or from such groups of melts as the inspector may specify, but in no case shall a group consist of more than 1,000 lbs. of castings.

(c) In the case of castings where, in the opinion of the inspector it is impracticable to attach a test coupon to the casting, bars shall be cast separately in sand. At least one test bar shall be poured from each melt of metal, or such groups of melts as the inspector may specify, but in no case shall a group consist of more than 1,000 lbs. of castings. The bars shall be cast from the first metal poured from the melt, and the inspector shall witness the pouring of the test mold.

(d) If any test specimen shows defective machining or reveals casting defects, it may be discarded and replaced by another specimen selected by the inspector. If additional test coupons are not available, the replacement specimen may be taken from the body of a casting selected by the inspector to represent the lot.*

§ 51.20–8 *Workmanship and finish.* (a) The castings shall be free from blowholes, porosity, hard spots, shrinkage defects, or cracks, or other injurious defects and shall be smooth and well cleaned, before inspection, by sand blasting, tumbling, chipping, or other process approved by the inspector.

(b) The castings shall not be repaired, plugged, welded, or "burned in," unless permission from the inspector has been previously secured. This permission will be given only when the defects are such that after the approved repair the usefulness and strength of the casting has not been impaired. Each such repair shall be encircled by a ring of white paint at the time of shipment.

(c) All castings shall be true to pattern, free from swells, etc. Wall thicknesses shall be uniform throughout the lot of castings and all cores shall be accurately set.

(d) Where thick and thin sections join, the manufacturer shall be permitted to add (where not previously provided) fillets of proper size to avoid cracking upon cooling, subject to the approval of the inspector.*

§ 51.20–9 *Marking.* Valves, flanges and fittings shall be marked in accordance with rules for marking steel valves, flanges and fittings.*

§ 51.20–10 *Certification.* Manufactures are required to file certificates with the Director that all castings intended for marine service will meet these specifications.*

Steel Plates (Flange and Firebox Quality)

NOTE: In substantial agreement with A. S. T. M. Specification A 70–39. Certified material—Class B.

§ 51.21–1 *Scope.* These specifications cover carbon-steel plates up to 4 in. inclusive in thickness, of flange and firebox qualities. This material is suitable for fusion welding.*

§ 51.21–2 *Process.* The steel shall be made by either or both of the following processes: open-hearth or electric-furnace.*

§ 51.21–3 *Heat treatment.* (a) Plates over 2 in. in thickness, before being fabricated, shall be uniformly heat treated to produce grain refinement. Heat treatment involving quenching in a liquid medium is not permitted. If this treatment is not done at the rolling mill the testing shall be carried out in accordance with (b).

(b) When a fabricator, who is equipped properly to perform the work, elects to do the required heat treatment for grain refinement, he shall so indicate on his orders to the mill and he shall accept the plates on the basis of the mill tests. The plate manufacturer shall make the tests prescribed in these specifications, the tension and bend test specimens to be prepared from full thickness pieces heat treated under conditions he considers appropriate for grain refinement and to give the test requirements. The manufacturer shall inform the fabricator of the procedure followed in treating the pieces at the mill for guidance in treating the plates. The required physical properties shall be determined after heat treatment of the plates on specimens prepared from pieces similarly and simultaneously treated with the plates. Pieces for two tension tests, one top and one bottom, shall be provided from each plate as rolled.[1]*

§ 51.21–4 *Chemical composition.* The steel shall conform to the following requirements as to chemical composition:

	Flange	Firebox
Carbon, max., percent:		
For plates ¾ in. and under in thickness		0.25
For plates over ¾ in. to 4 in. incl. in thickness		.30
Manganese, max., percent	0.80	.80
Phosphorous, max., percent:		
Acid	.05	.04
Basic	.04	.035
Sulphur, max., percent	.05	.04

*

§ 51.21–5 *Tensile properties.* (a) The material shall conform to the following requirements as to tensile properties:

	Flange	*Firebox*
Tensile strength, lb. per sq. in.	55,000–65,000	55,000–65,000
Yield point, min. lb. per sq. in.	0.5 tens. str.	0.5 tens. str.
Elongation in 8 in., min., percent	1,500,000 / tens. str.	1,550,000 / tens. str.
Elongation in 2 in., min., percent	1,700,000 / tens. str.	1,750,000 / tens. str.

(b) Tensile strength only need be determined on the tension test specimen taken from the top of firebox plates, and it shall not exceed 70,000 lbs. per sq. in.

(c) Should the rule in (a) for minimum elongation in 8 in., for firebox steel give a value of less than 25 percent, the

[1] The term "plate as rolled," here and used in §§ 51.21–8 (c) and 51.21–9 (a), refers to the unit plate rolled from a slab or directly from an ingot in its relation to the location and number of specimens; not to its condition.

minimum allowable elongation shall be 25 percent, subject to the modifications of § 51.21–6.*

§ 51.21–6 *Modifications in elongation.* (a) For material over ¾ to 2 in., inclusive, in thickness, a deduction from the percentage of elongation in 8 in., specified in §§ 51.21–5 (a) and (c) of 0.125 percent shall be made for each increase of 1/32 in. of the specified thickness above ¾ in., to a minimum of 21 percent for flange steel and 22 percent for firebox steel.

(b) For material over 2½ in. in thickness, a deduction from the percentage of elongation in 2 in. specified in § 51.21–5 (a) of 0.5 percent shall be made for each increase of ½ in. of the specified thickness, above 2½ in.

(c) For material ¼ in. or under in thickness, the elongation shall be measured on a gage length of 24 times the thickness of the specimen.*

§ 51.21–7 *Bending properties.* The bend test specimen shall stand being bent cold through 180° without cracking on the bent portion, around a pin, the diameter of which shall have the following relation to the thickness of the specimen. When the test is made on a specimen reduced in thickness, the rolled surface shall be on the outer curve of the bend. The requirements for universal edge rolled plates apply only when such plates are permitted for double butt-strap construction.

Thickness of material	Ratio of pin diameter to thickness of specimen	
	Sheared plates	Universal mill plates
1 inch and under	1	1½
Over 1 to 1½ inches, incl	1½	2½
Over 1½ to 2 inches, incl	2	3
Over 2 to 3 inches, incl	2	----------
Over 3 to 4 inches, incl	2½	----------

*

§ 51.21–8 *Test specimens.* (a) For plates two inches and under in thickness, the test specimens shall be prepared for testing from the material in its rolled condition.

(b) For plates over two inches in thickness, the test specimens shall be prepared from the material in its heat-treated condition, or from full thickness samples similarly and simultaneously treated. (See § 51.21–3).

(c) Tension test specimens for firebox steel shall be taken from the top and bottom corners of the plate as rolled, parallel to its longitudinal axis, and for flange steel from the bottom corner of the plate only. Bend test specimens shall be taken from the middle of the top of the plate as rolled, at right angles to its longitudinal axis. (See note in § 51.21–3).

(d) For plates two inches and under in thickness, tension and bend test specimens shall be the full thickness of the material and shall be machined to the form and thickness shown in Figure M–1; or the bend test specimen may be machined with both edges parallel.

(e) For plates over two inches in thickness, tension test specimens shall be machined to the form and dimensions shown in Figure M–2, and the axis of each such specimen shall be located midway between the center and the top or bottom surface of the plate. The bend test specimen shall be at least one and one-half inches in width with both edges parallel and may be reduced to two inches in thickness; but shall have one surface as rolled.

(f) The sides of the bend test specimens may have the corners rounded to a radius of not over one-sixteenths inch for plates two inches and under in thickness, and to not over one-eighth inch for plates over two inches in thickness.*

§ 51.21–9 *Number of tests.* (a) Two tension and one bend test shall be made from each firebox steel plate as rolled. One tension and one bend test shall be made from each flange steel plate as rolled.

(b) If any test specimen shows defective machining or develops flaws, it may be discarded and another specimen substituted.

(c) If the percentage of elongation of any tension test specimen is less than that specified in § 51.21–5 and any part of the fracture is more than three-fourths inch from the center of the gage length of a two inch specimen or is outside the middle third of the gage length of an eight inch specimen as indicated by scribe scratches marked on the specimen before testing, a retest shall be allowed.*

§ 51.21–10 *Permissible variations in thickness and weight.* No plate shall vary more than 0.01 inch under the thickness specified.*

§ 51.21–11 *Finish.* The finished plates shall be free from injurious defects and shall have a workmanlike finish.*

§ 51.21–12 *Marking.* (a) The name or brand of the manufacturer, the manufacturer's test identification number, class, and lowest, tensile strength specified shall be legibly stamped on each finished plate in two places not less than twelve inches from the edges and on each butt-strap near the enter line not less than 12 inches from each end. The manufacturer's test identification number shall be legibly stamped on each test specimen.

(b) Plates shall be match-marked as defined in paragraph (c) so that the test specimens representing them may be identified. When the plate rolled from a slab or ingot is cut into two or more smaller plates, each shall be match-marked so that they may be identified with the test specimens representing them.

(c) Each match-mark shall consist of two overlapping circles not less than one and one-half inches in diameter, placed upon the shear lines, and made by separate impressions of a single-circle steel die.

(d) Match-marked coupons shall match with the sheets represented, and only those which match properly shall be accepted.*

§ 51.21–13 *Manufacturer's certification.* The manufacturer shall furnish the purchaser with a certification for each order stating the manufacturer's number of the plate and the chemical and physical properties as shown by the tests. Such material when furnished for use in the construction of unfired pressure vessels designed for a maximum allowable working pressure not exceeding 700 lbs. and temperatures not exceeding 500° F. shall not be subject to inspection by a duly authorized inspector.*

Steel Plates for Welding

NOTE: In substantial agreement with A. S. T. M. Designation A 89–39. Certified material—Class B.

§ 51.22–1 *Scope.* These specifications cover two grades of carbon-steel plate of flange and firebox qualities. This material is suitable for fusion welding. It is also suitable for forge welding when the requirements specified in § 51.22–3 (b) are applied. The purchaser shall specify when material is to be used for forge welding.

NOTE: The term "forge welding" as used in these specifications refers to the process of heating with water gas, and hammering mechanically, without the use of fluxes.

*

§ 51.22–2 *Process.* The steel shall be made by either or both of the following processes: open-hearth or electric-furnace.*

§ 51.22–3 *Chemical composition.* (a) The steel shall conform to the requirements as to chemical composition prescribed in Table I.

(b) When these specifications are used for material that is to be forge welded, the maximum quantity of either nickel or chromium shall not exceed 0.05 percent, and unless otherwise specified, the silicon shall not exceed 0.05 percent.*

§ 51.22–4 *Tensile properties.* (a) The material shall conform to the requirements as to tensile properties prescribed in Table II.

(b) Tensile strength only need be determined on the tension test specimen taken longitudinally from the top of firebox plates, and it shall not exceed 60,000 psi., for Grade A, nor 65,000 psi. for Grade B.

(c) For material over ¾ inch in thickness, a deduction from the percentages of elongation in 8 in., prescribed in Table II of 0.125 percent shall be made for each increase of 1/32 in., of the specified thickness above ¾ in.

(d) For material ¼ in. and under in thickness, the elongation shall be measured on a gage length of 24 times the thickness of the specimen.

TABLE I—*Chemical Requirements*

	Flange		Firebox	
	Grade A	Grade B	Grade A	Grade B
Carbon, max., percent:				
For plates ¾ in. and under in thickness	0.15	0.20	0.15	0.20
For plates over ¾ in. in thickness	.17	.22	.17	.22
Manganese, percent	.85 to .60	.35 to .60	.85 to .60	.35 to .60
Phosphorous, max., percent:				
Acid	.06	.06	.04	.04
Basic	.04	.04	.035	.035
Sulphur, max., percent	.05	.05	.04	.04

TABLE II—*Tensile requirements*

	Flange		Firebox	
	Grade A	Grade B	Grade A	Grade B
Tensile strength, min. lb. per sq. in	45,000	50,000	45,000	50,000
Yield point, min. lb. per sq. in	0.5 tens. str.	0.5 tens. str.	0.5 tens. str.	0.5 tens. str.
But in no case less than	24,000	27,000	24,000	27,000
Elongation in 8 in., min. percent	1,500,000 / tens. str.	1,500,000 / tens. str.	1,550,000 / tens. str.	1,550,000 / tens. str.
Elongation in 2 in., min. percent	1,600,000 / tens. str.	1,600,000 / tens. str.	1,650,000 / tens. trs.	1,650,000 / tens. str.

*

§ 51.22–5 *Bending properties.* The bend test specimen shall stand being bent cold through 180° without cracking on the outside of the bent portion around a pin, the diameter of which shall have the following relation to the thickness of the specimen:

Thickness of material:	*Ratio of pin diameter to thickness of specimen*
1 in. and under	1
Over 1 in	2

*

§ 51.22–6 *Test specimens.* Tension test specimens for firebox steel, shall be taken from the top and bottom corners of the plate as rolled, parallel to its longitudinal axis, and for flange steel from the bottom corner of the plate only. Bend test specimens shall be taken from the middle of the top of the plate as rolled, at right angles to its longitudinal axis.

(b) Tension and bend test specimens shall be the full thickness of the material as rolled, except as specified in paragraph (c), and shall be machined to the form and dimensions shown in Figure M–1; or the bend test specimen may be machined with both edges parallel.

(c) For plates over one and one-half inches in thickness, tension test specimens may be machined to a thickness or diameter of at least three-fourths inch for a length of at least nine inches, or they may be machined to the form and dimensions shown in figure M–2. The bend test specimens of plates over one and one-half inches in thickness may be machined to a thickness of at least three-fourths inch or to one by one-half inch in section.

(d) The sides of the bend test specimens may have the corners rounded to a radius not over one-sixteenth inch.*

§ 51.22–7 *Number of tests.* Two tension tests and one bend test shall be made from each firebox steel plate as rolled. One tension test and one bend test shall be made from each flange steel plate as rolled.

(b) If any test specimen shows defective machining or develops flaws, it may be discarded and another specimen substituted.

(c) If the percentage of elongation of any tension test specimen is less than that specified in § 51.22–4 and any part of the fracture is more than three-fourths inch from the center of the gage length of a two-inch specimen or is outside the middle third of the gage length of an eight-inch specimen, as indicated by scribe scratches marked on the specimen, before testing, a retest shall be allowed.*

§ 51.22–8 *Permissible variations in thickness and weight.* No plate shall vary more than 0.01 inch under the thickness specified.*

§ 51.22–9 *Finish.* The finished plates shall be free from injurious defects and shall have a workmanlike finish.*

§ 51.22–10 *Marking.* (a) The name or brand of the manufacturer, the manufacturer's test identification number, class, and lowest tensile strength for the grade specified in § 51.22–4 (a) shall be legibly stamped on each plate. The manufacturer's test identification number shall be legibly stamped on each test specimen.

(b) Plates shall be match-marked as defined in paragraph (c) so that the test specimens representing them may be identified. When the plate rolled from a slab or ingot is cut into two or more smaller plates, each shall be match-marked so that they may all be identified with the test specimens representing them.

(c) Each match-mark shall consist of two overlapping circles, each not less than one and one-half inches in diameter, placed upon the shear lines, and made by separate impressions of a single-circle steel die.

(d) Match-marked coupons shall match with the sheets represented and only those which match properly shall be accepted.*

§ 51.22–11 *Manufacturer's certification.* The manufacturer shall furnish the purchaser with a certification for each order stating the manufacturer's number of the plate and the chemical and physical properties as shown by the tests. Such material when furnished for use in the construction of unfired pressure vessels designed for a maximum allowable working pressure not exceeding 700 lbs. and temperatures not exceeding 500° F. shall not be subject to inspection by a duly authorized inspector.*

PART 52—CONSTRUCTION

Section 52.2–2 (a) is amended to read as follows:

§ 52.2–2 *Materials and workmanship.* (a) The plates used shall be of marine boiler steel conforming to the provisions of §§ 51.2–1 to 51.2–10 inclusive, except, that cylindrical shells of riveted construction not subject to the radiant heat of the fire and designed for working pressures not exceeding 150 lbs. per square inch may be constructed with steel plates meeting the specifications of §§ 51.21–1 to 51.21–13 inclusive, and which are tested, inspected, and stamped in accordance with § 51.1–1. (R.S. 4405, 4417a, 4418, 4426, 4429, 4430, 4433, 4434, as amended, 49 Stat. 1544; 46 U.S.C. 375, 391a, 392, 404, 407, 408, 411, 412, 367)

Section 52.2–3 (b) is amended by changing the sentence immediately following the letter "S" to read as follows:

§ 52.2–3 *Computations and factors of safety.*

* * * * *

(b) * * *

S=tensile strength stamped on shell plates as provided for in §§ 51.2–1 to 51.2–10. * * * (R.S. 4405, 4417a, 4418, 4426, 4430, 4433, 4434, as amended, 49 Stat. 1544; 46 U.S.C. 375, 391a, 392, 404, 408, 411, 412, 367)

Section 52.2–3 (c) is amended to read as follows:

(c) The minimum thickness of any cylindrical shell plate of any boiler shall be one-fourth inch. (R.S. 4405, 4417a, 4418, 4426, 4430, 4433, 4434, as amended, 49 Stat. 1544; 46 U.S.C. 375, 391a, 392, 404, 408, 411, 412, 367)

Section 52.2–4 is amended to read as follows:

§ 52.2–4 *Seamless shells.* Shells may be of seamless construction with or without integral heads, provided the material conforms to the requirements of §§ 51.11–1 to 51.11–9 for seamless tubing. In such cases, the value of E in formulas (1) and (2) shall be taken as 1.0. (R.S. 4405, 4417a, 4418, 4426, 4430, 4433, 4434, as amended, 49 Stat. 1544; 46 U.S.C. 375, 391a, 392, 404, 408, 411, 412, 367)

Section 52.2–5 is amended to read as follows:

§ 52.2–5 *Forge-welded shells.* Forge-welded shells may be used up to and including 30 inches inside diameter, provided the same are made of open-hearth

steel, as specified in §§ 51.11–1 to 51.11–9, the details of the welding process and the methods of determining the homogeniety and reliability of the weld to be approved by the Board. The maximum allowable working pressure and minimum thickness of such shells shall be computed by formulas (1) and (2), § 52.2–3, using 0.7 as the value of E. (R.S. 4405, 4417a, 4418, 4426, 4429, 4430, 4433, 4434, as amended, 49 Stat. 1544; 46 U.S.C. 375, 391a, 392, 404, 407, 408, 411, 412, 367)

Section 52.3–1 (a) is amended by changing the reference following the last sentence thereof to read as follows:

§ 52.3–1 *Approved types of joints.* (a) * * * (See §§ 56.20–1 to 56.20–19) (R.S. 4405, 4417a, 4418, 4426, 4429, 4430, 4433, 4434, as amended, 49 Stat. 1544; 46 U.S.C. 375, 391a, 392, 404, 407, 408, 411, 412, 367)

Section 52.3–2 (a) is amended to read as follows:

§ 52.3–2 *Materials and workmanship.* (a) The butt straps of riveted joints shall be of steel conforming with the specifications and requirements for the shell plates. (R.S. 4405, 4417a, 4418, 4426, 4429, 4430, 4433, 4434, as amended, 49 Stat. 1544; 46 U.S.C. 375, 391a, 392, 404, 407, 408, 411, 412, 367)

Section 52.3–3 (c) is amended by adding new values to the table of shearing strength of rivets given in the definition of the quantity "s" so that the amended definition reads as follows:

§ 52.3–3 *Longitudinal riveted joints and computations.*

* * * * *

(c) * * *

s=shearing strength of rivets per square inch of sectional area, assumed as follows:

	Pounds
Iron rivets in single shear	38,000
Iron rivets in double shear	76,000
Steel rivets, Grade A, in single shear	44,000
Steel rivets, Grade A, in double shear	88,000
Steel rivets, Grade B, in single shear	52,000
Steel rivets, Grade B, in double shear	104,000
Alloy-steel rivets, Grade C, in single shear	60,000
Alloy-steel rivets, Grade C, in double shear	120,000

* * * (R.S. 4405, 4417a, 4418, 4426, 4429, 4430, 4433, 4434, as amended, 49 Stat. 1544; 46 U.S.C. 375, 391a, 392, 404, 407, 408, 411, 412, 367)

Section 52.3–6 (a) is amended to read as follows:

§ 52.3–6 *Welded joints.* (a) Welded joints shall be as specified in § 52.2–5 or §§ 56.20–1 to 56.20–19. No unreinforced hole shall be located in a welded joint except that it may be pierced for rivets of circumferential joints. * * * (R.S. 4405, 4417a, 4418, 4426, 4429, 4430, 4433, 4434, as amended, 49 Stat. 1544; 46 U.S.C. 375, 391a, 392, 404, 407, 408, 411, 412, 367)

Section 52.4–2 (a) is amended to read as follows:

§ 52.4–2 *Materials and workmanship.* (a) The steel plates used in the construction of domes shall conform to the specifications and requirements for the shell plates. For steam chimneys the steel plates used shall conform to the specifications and requirements of §§ 512.2–1 to 51.2–10 inclusive, or §§ 51.21–1 to 51.21–13 inclusive, and which are tested, inspected, and stamped in accordance with § 51.1–1. * * * (R.S. 4405, 4417a, 4418, 4426, 4429, 4430, 4433, 4434, as amended, 49 Stat. 1544; 46 U.S.C. 375, 391a, 392, 404, 407, 408, 411, 412, 367)

Section 52.5–1 (a) is amended to read as follows:

§ 52.5–1 *Definitions.* (a) Unstayed heads are the ends of a pressure shell or vessel. They may be either flat or dished. Heads may be integral with, or riveted or welded to, the shell. * * * (R.S. 4405, 4417a, 4418, 4426, 4430, 4433, 4434, as amended, 49 Stat. 1544; 46 U.S.C. 375, 391a, 392, 404, 408, 411, 412, 367)

Section 52.5–2 (a) is amended to read as follows:

§52.5–2 *Materials and workmanship.* (a) The steel used in the construction of heads shall be of one of the grades suitable for flanging under the general requirements and specifications for the shell plates. After heads have been dished, flanged, or locally heated, they shall be properly annealed. * * * (R.S. 4405, 4417a, 4418, 4426, 4429, 4430, 4433, 4434, as amended, 49 Stat. 1544; 46 U.S.C. 375, 391a, 392, 404, 407, 408, 411, 412, 367)

Section 52.6–3 (a) is amended to read as follows:

§ 52.6–3 *Materials and workmanship.* (a) The material for reinforcing plates around openings shall conform to the requirements of the plate to be reinforced. When they are locally heated for flanging or forming they shall be properly annealed. * * * (R.S. 4405, 4417a, 4418, 4426, 4429, 4430, 4433, 4434, as amended, 49 Stat. 1544; 46 U.S.C. 375, 391a, 392, 404, 407, 408, 411, 412, 367)

Section 52.6–3 (c) is amended to read as follows:

(c) The cover plates for manholes shall be of steel conforming to the specifications and requirements for the shell plates. Handhole covers may be made of steel conforming to the specifications and requirements of the shell plates, or of steel conforming to the specifications and requirements of §§ 51.21–1 to 51.21–13, inclusive, or of property designed steel forgings conforming to the requirements of §§ 51.15–1 to 51.15–14, or of properly designed steel castings conforming to the requirements of §§ 51.17–1 to 51.17–12. * * * (R.S. 4405, 4417a, 4418, 4426, 4430, 4433, 4434, as amended, 49 Stat. 1544; 46 U.S.C. 375, 391a, 392, 404, 408, 411, 412, 367)

Section 52.6–3 (e) is amended to read as follows:

(e) The material of bolts securing girders or dogs and cover plates shall conform to the requirements of §§ 51.4–1 to 51.4–10. * * * (R.S. 4405, 4417a, 4418, 4426, 4430, 4433, 4434, as amended, 49 Stat. 1544; 46 U.S.C. 375, 391a, 392, 404, 408, 411, 412, 367)

Section 52.6–3 (f) is amended to read as follows:

(f) When handhole or other access openings are made, a margin of not less than one-fourth inch shall be left when punching operations are used, and not less than one-eighth inch shall be left when machine burning methods are employed. Such margins shall be machined or ground away to relieve the metal of any stresses which may be set up due to burning or punching operations. * * * (R.S. 4405, 4417a, 4418, 4426, 4430, 4433, 4434, as amended, 49 Stat. 1544; 46 U.S.C. 375, 391a, 392, 404, 408, 411, 412, 367)

Section 52.8–2 is amended to read as follows:

§ 52.8–2 *Materials.* (a) Round bar stays which require no welding or forging other than upsetting at the ends for threading or to form eyes for use in conjunction with crowfeet, or similar fastenings, shall conform to the requirements of §§ 51.4–1 to 51.4–10, 51.5–1 to 51.5–10, or §§ 51.6–1 to 51.6–10.

(b) Crowfeet, lugs, and similar connections for stays shall be forgings without welds conforming to the requirements of §§ 51.15–1 to 51.15–14.

(c) Welded stays or parts thereof shall conform to the requirements of §§ 51.6–1 to 51.6–10. All welds in the body of the stay must be made by the hammer-weld process.

(d) Stiffeners made of structural shapes shall conform to the requirements specified in §§ 51.5–1 to 51.5–10.

(e) Gusset and diagonal stays made of steel plate, also doubling plates and girders shall conform to the requirements specified in §§ 51.2–1 to 51.2–10.

(f) Stay tubes shall conform to the requirements of §§ 51.9–1 to 51.9–16, 51.9a–1 to 51.9a–18, and to §§ 51.10–1 to 51.10–18.

(g) Rivets shall conform to the following requirements:

Steel rivets, §§ 51.7–1 to 51.7–9.
Iron rivets, §§ 51.8–1 to 51.8–11.

(h) Nuts for screw stays shall be made of steel, conforming to the requirements of §§ 51.15–1 to 51.15–14 or, of refined wrought iron conforming to the requirements of §§ 51.6–1 to 51.6–10. (R.S. 4405, 4417a, 4418, 4426, 4429, 4430, 4433, 4434, as amended, 49 Stat. 1544; 46 U.S.C. 375, 391a, 392, 404, 407, 408, 411, 412, 367)

Section 52.10–2 is amended to read as follows:

§ 52.10–2 *Materials.* (a) All plates forming parts of combustion chambers or fire boxes shall conform to the general specification for the shell plates.

(b) Structural shapes of any form used for stays and reinforcement shall conform to the requirements of §§ 51.5–1 to 51.5–10. (R.S. 4405, 4417a, 4418, 4426, 4429, 4430, 4433, 4434, as amended, 49 Stat. 1544; 46 U.S.C. 375, 391a, 392, 404, 407, 408, 411, 412, 367)

Section 52.11–2 is amended to read as follows:

§ 52.11–2 *Materials.* (a) All furnaces shall be constructed of steel plates conforming to the requirements for firebox

quality steel as given in §§ 51.2–1 to 51.2–10.

(b) Riveted flues shall be made of firebox quality steel plates conforming to the requirements of §§ 51.2–1 to 51.2–10.

(c) Welded flues may be constructed of firebox quality steel conforming to the requirements of §§ 51.2–1 to 51.2–10 or of wrought iron or steel pipe conforming to the requirements of §§ 51.11–1 to 51.11–9, and 51.12–1 to 51.12–10.

(d) Seamless flues may be constructed of steel tubing conforming to the requirements of §§ 51.11–1 to 51.11–9. (R.S. 4405, 4417a, 4418, 4426, 4429, 4430, 4433, 4434, as amended, 49 Stat. 1544; 46 U.S.C. 375, 391a, 392, 404, 407, 408, 411, 412, 367)

Section 52.11–3 (c) is amended to read as follows:

§ 52.11–3 *Computations.*

* * * * *

(c) *Flues.* The maximum allowable working pressure and minimum thickness of plain riveted flues shall be computed by formulas provided in paragraph (b) of this section. For seamless or welded flues, not less than 6 nor more than 18 inches in outside diameter and subject to external pressure, the following formulas shall be used:

$$W=\frac{86670\ T-1386\ D}{5D} \qquad (44)$$

$$T=\frac{D\ (5W+1386)}{86670} \qquad (45)$$

where
W=maximum allowable working pressure, in pounds per square inch.
T=thickness of flue, in inches.
D=external diameter of flue, in inches.

NOTE: As a matter of convenience, the following table is computed from the preceding formulas for seamless or welded flues:

TABLE C–2—*Maximum allowable working pressure and minimum thickness of seamless or welded flues subject to external pressure*

Outside diameter of flue	Maximum allowable working pressure in pounds per square inch						
	100	120	140	160	180	200	220
	Thickness of flue, in inches						
Inches:							
6	0.130	0.137	0.144	0.151	0.158	0.165	0.172
7	.152	.161	.169	.177	.185	.193	.201
8	.174	.184	.193	.202	.211	.221	.229
9	.196	.206	.217	.228	.238	.248	.258
10	.218	.229	.241	.253	.264	.276	.287
11	.239	.252	.265	.278	.290	.303	.316
12	.261	.275	.289	.303	.317	.331	.344
13	.283	.298	.313	.328	.343	.359	.373
14	.305	.321	.337	.354	.369	.386	.402
15	.326	.344	.361	.379	.396	.414	.430
16	.348	.367	.385	.405	.422	.441	.459
17	.370	.390	.409	.430	.448	.469	.488
18	.392	.413	.433	.455	.475	.497	.516

(R.S. 4405, 4417a, 4418, 4426, 4429, 4430, 4433, 4434, as amended, 49 Stat. 1544; 46 U.S.C. 375, 391a, 392, 404, 407, 408, 411, 412, 367)

Paragraphs (a), (b), and (c) of § 52.12–2 are amended to read as follows:

§ 52.12–2 *Materials and workmanship.* (a) Seamless steel boiler tubes shall comply with the requirements of §§ 51.9–1 to 51.9–16 and §§ 51.10–1 to 51.10–18 for such tubes.

(b) Electric-resistance-welded steel and iron boiler tubes shall comply with the requirements of §§ 51.9a–1 to 51.9a–18 for such tubes.

(c) Lap-welded steel and wrought-iron boiler tubes shall comply with the requirements of §§ 51.9–1 to 51.9–16 for such tubes. (R.S. 4405, 4417a, 4418, 4426, 4429, 4430, 4433, 4434, as amended, 49 Stat. 1544; 46 U.S.C. 375, 391a, 392, 404, 407, 408, 411, 412, 367)

Section 52.12–3 (b) is amended to read as follows:

§ 52.12–3 *Computations.*

* * * * *

(b) The maximum allowable working pressure and minimum thickness of seamless or welded boiler tubes, less than 6" in diameter and subject to external pressure, shall be computed by the following formulas:

$$W=\frac{14{,}000\ (T-0.065)}{D} \qquad (48)$$

$$T=\frac{WD}{14{,}000}+0.065 \qquad (49)$$

where
W=maximum allowable working pressure, in pounds per square inch.
T=thickness of tube, in inches.
D=external diameter of tube, in inches.

As a matter of convenience, the following table has been computed from the preceding formulas:

TABLE C–4—*Maximum allowable working pressure and minimum thickness for seamless or welded boiler tubes less than 6" in diameter and subject to external pressure*

Outside diameter of tube in inches	Maximum allowable working pressure in pounds per square inch, nearest B. W. G. number and thickness of tube wall in inches						
	13 0.095	12 0.105	11 0.120	10 0.135	9 0.150	8 0.165	7 0.18
1	420	560	770	980	-----	-----	-----
1½	280	380	520	660	800	940	-----
1¾	240	320	440	570	680	800	920
2	210	280	390	490	600	700	810
2¼	190	250	350	430	530	630	720
2½	170	230	310	400	480	560	650
3	-----	190	260	330	400	470	540
3¼	-----	180	240	310	370	430	500
3½	-----	160	220	280	340	400	460
4	-----	-----	200	250	300	350	410
4½	-----	-----	180	220	270	320	360
5	-----	-----	-----	200	240	280	330
5⅜	-----	-----	-----	-----	230	270	300
5½	-----	-----	-----	-----	220	260	300

(R.S. 4405, 4417a, 4418, 4426, 4429, 4430, 4433, 4434, as amended, 49 Stat. 1544; 46 U.S.C. 375, 391a, 392, 404, 407, 408, 411, 412, 367)

Section 52.13–3 is amended to read as follows:

§ 52.13–3 *Materials.* (a) Headers or fittings, used in connection with these appurtenances, shall be constructed of wrought steel in accordance with the requirements of §§ 51.2–1 to 51.2–10, inclusive, or §§ 51.11–1 to 51.11–9, inclusive, or of wrought iron conforming to the requirements of §§ 51.12–1 to 51.12–10, inclusive, or cast steel made in conformance with the requirements of §§ 51.17–1 to 51.17–12, inclusive. Equivalent material may be used if approved by the Board of Supervising Inspectors. (See §§ 51.1–18 and 52.1–13.) Ends of headers may be closed by plugs conforming to the requirements of §§ 51.2–1 to 51.2–10, inclusive, (Class A material), or §§ 51.21–1 to 51.21–13, inclusive, or §§ 51.22–1 to 51.22–11, inclusive (Class B material).

(b) Tubes used in the construction of superheaters shall conform to the requirements of §§ 51.9–1 to 51.9–16, inclusive; §§ 51.9a–1 to 51.9a–18, inclusive; or §§ 51.10–1 to 51.10–18, inclusive. (R.S. 4405, 4417a, 4418, 4426, 4429, 4430, 4433, 4434, as amended, 49 Stat. 1544; 46 U.S.C. 375, 391a, 392, 404, 407, 408, 411, 412, 367)

Section 52.14–2 (c) is amended to read as follows:

§ 52.14–2 *Design, material, and workmanship.*

* * * * *

(c) Bodies of safety valves having nominal diameters not exceeding 2½ inches may be made of bronze conforming to the requirements of §§ 51.20–1 to 51.20–10, inclusive, provided the steam temperature does not exceed 450° F. (R.S. 4405, 4417a, 4418, 4426, 4433, as amended, 49 Stat. 1544; 46 U.S.C. 375, 391a, 392, 404, 411, 367)

Section 52.15–2 (a) is amended to read as follows:

§ 52.15–2 *Materials and workmanship.* (a) Boiler mountings or attachments shall be made of steel forgings conforming to the requirements of §§ 51.15–1 to 51.15–14; steel castings conforming to the requirements of §§ 51.17–1 to 51.17–12; or, where the temperature does not exceed 450° F., they may be made of bronze castings conforming to the requirements of §§ 51.20–1 to 51.20–10. * * * (R.S. 4405, 4417a, 4418, 4426, 4433, as amended, 49 Stat. 1544; 46 U.S.C. 375, 391a, 392, 404, 411, 367)

Section 512.15–2 (d) is amended to read as follows:

(d) Where the temperature exceeds 500° F., all bolting material shall conform to the requirements of §§ 51.16–1 to 51.16–8 and §§ 51.16a–1 to 51.16a–9. For temperatures not in excess of 500° F., commercial bolting material conforming to the requirements of A. S. T. M. Designation A 107–40, or equivalent thereto may be used. * * * (R.S. 4405, 4417a, 4418, 4426, 4433, as amended, 49 Stat. 1544; 46 U.S.C. 375, 391a, 392, 404, 411, 367)

Section 52.15–11 (a) is amended to read as follows:

§ 52.15–11 *Water indicators.* (a) Each boiler shall have two independent means of indicating the water level in the boiler, one of which shall be a gage glass. The secondary indicator may consist of a gage glass, or other device approved by the Board, or where the allowable steam pressure does not exceed 250 pounds per square inch, three test cocks attached directly to the head or shell of the boiler. Where the working pressure exceeds 250 pounds per square inch, the gage glasses shall be of the flat

type instead of the common tubular type. * * * (R.S. 4405, 4417a, 4418, 4426, 4429, 4430, 4433, 4434, as amended, 49 Stat. 1544; 46 U.S.C. 375, 391a, 392, 404, 407, 408, 411, 412, 367)

Section 52.16-1 is amended to read as follows:

§ 52.16-1 *Approval.* (a) Evaporators, heaters, traps, valves and fittings, separators, pressure vessels, and miscellaneous appliances are subject to approval by the board of supervising inspectors before being installed on vessels coming under the jurisdiction of this Bureau.

(b) Manufacturers desiring to obtain approval of such appurtenances are required to submit detail drawings and specifications for consideration by the board of supervising inspectors. (R.S. 4405, 4417a, 4418, 4426, 4429, 4430, 4433, 4434, as amended, 49 Stat. 1544; 46 U.S.C. 375, 391a, 392, 404, 407, 408, 411, 412, 367)

Section 52.16-3 (b) is amended to read as follows:

§ 52.16-3 *Materials and workmanship.*

* * * * *

(b) The appurtenances and appliances covered by §§ 52.16-1 to 52.16-7 may be constructed of the following materials:

Steel castings, conforming to the requirements of §§ 51.17-1 to 51.17-12.

Bronze castings, conforming to the requirements of §§ 51.20-1 to 51.20-10, provided the temperature to which they are subjected does not exceed 450° F.

Cast iron, conforming to the requirements of §§ 51.18-1 to 51.18-10, for appurtenances and appliances not subject to shock, provided the maximum allowable working pressure does not exceed 25 pounds and the temperature is not in excess of 450° F. This pressure limitation of 25 pounds does not apply to steam traps. For pipe fittings and valves see § 55.19-3. * * * (R.S. 4405, 4417a, 4418, 4426, 4429, 4430, 4433, 4434, as amended, 49 Stat. 1544; 46 U.S.C. 375, 391a, 392, 404, 407, 408, 411, 412, 367)

Section 52.16-5 (a) is amended to read as follows:

§ 52.16-5 *Bolting.* (a) Bolting material used for securing heads, doors, or covers shall comply with the requirements of A. S. T. M. Designation A 107-40, provided the temperature does not exceed 500° F.; if above 500° F., the bolting material shall conform to the requirements of §§ 51.16-1 to 51.16-8 and 51.16a-1 to 51.16a-9. * * * (R.S. 4405, 4417a, 4418, 4426, 4429, 4430, 4433, 4434, as amended, 49 Stat. 1544; 46 U.S.C. 4375, 391a, 392, 404, 407, 408, 411, 412, 367)

PART 53—INSTALLATION

Section 53.17-3, *Special fire protection for passenger vessels,* is deleted and §§ 53.17-4 and 53.17-5 are renumbered to § 53.17-3, *Dampers,* and § 53.17-4, *Installation of auxiliary or donkey boilers, respectively.* (R.S. 4405, 4417a, as amended, 49 Stat. 1544, sec. 2 (a) of 54 Stat. 1028; 46 U.S.C. 375, 391a, 404, 463a)

PART 55—PIPING SYSTEMS

Section 55.19-3 (j) is amended to read as follows:

§ 55.19-3 *Detail requirements.*

* * * * *

(j) Forged steel, or cast steel conforming to the requirements of §§ 51.15-1 to 51.15-14, 51.17-1 to 51.17-12, may be used in the construction of valves and fittings for any system and for all pressures and temperatures covered by the rules in this subchapter. * * * (R.S. 4405, 4417a, 4418, 4426, 4429, 4430, 4433, 4434, as amended, 49 Stat. 1544; 46 U.S.C. 375, 391a, 392, 404, 407, 408, 411, 412, 367)

Section 55.19-3 (k) is amended to read as follows:

(k) Bronze castings conforming to the requirements of §§ 51.20-1 to 51.20-10, Grade B, may be used in the construction of valves and fittings for temperatures not exceeding 450° F. * * * (R.S. 4405, 4417a, 4418, 4426, 4429, 4430, 4433, 4434, as amended, 49 Stat. 1544; 46 U.S.C. 375, 391a, 392, 404, 407, 408, 411, 412, 367)

Section 55.19-3 (l) is amended to read as follows:

(l) Malleable iron conforming to the requirements of §§ 51.19-1 to 51.19-16 for Grade A material, may be used in the construction of valves and fittings for working pressures not exceeding 250 pounds per square inch. Grade B malleable iron may be used for working pressures not exceeding 125 pounds per square inch. Cast iron conforming to the requirements of §§ 51.18-1 to 51.18-10, may be used in the construction of valves and fittings for working pressures not exceeding 125 pounds per square inch. All of these materials are subject to the requirements for various individual systems provided for in this part. * * * (R.S. 4405, 4417a, 4418, 4426, 4429, 4430, 4433, 4434, as amended, 49 Stat. 1544; 46 U.S.C. 375, 391a, 392, 404, 407, 408, 411, 412, 367)

Section 55.19-3 (v) is amended to read as follows:

(v) For temperatures not exceeding 500° F., steel bolting material conforming to the requirements of A. S. T. M. Designation A 107-40 or equivalent thereto may be used. For temperatures above 500° F., alloy-steel bolting material as specified in §§ 51.16-1 to 51.16-8 and 51.16a-1 to 51.16a-9 shall be used. * * * (R.S. 4405, 4417a, 4418, 4426, 4429, 4430, 4433, as amended, 49 Stat. 1544; 46 U.S.C. 375, 391a, 392, 404, 407, 408, 411, 367)

Section 55.19-3 (w) is amended to read as follows:

(w) Forged-steel welding fittings, valves, or flanges, known as the socket type, wherein the piping is attached by entering the pipe into the socket and securing it to the fitting with a single fillet weld, may be used where the diameter of the pipe does not exceed 2½ inches nominal pipe size for Class I piping, and without diameter limitation for Class II piping, provided the welding is done by certificated welding operators. * * * (R.S. 4405, 4417a, 4418, 4426, 4429, 4430, 4433, as amended, 49 Stat. 1544; 46 U.S.C. 375, 391a, 392, 404, 407, 408, 411, 367)

Section 55.19-6 (a) is amended to read as follows:

§ 55.19-6 *Class I piping*—(a) *Scope.* Class I piping within the meaning of this section shall include hot-water piping at temperatures exceeding 200° F., oil piping at temperatures exceeding 150° F. regardless of pressure, and all other piping at pressures exceeding 125 lbs. per square inch except fire main piping not used for high temperature water for tank cleaning operations. Fire mains which are used for high temperature water for tank cleaning operations shall conform to the requirements of Class I piping with the exception that stress relieving and testing of welded joints by the radiographic or paramagnetic method will not be required. * * * (R.S. 4405, 4417a, 4418, 4426, 4429, 4430, 4433, as amended, 49 Stat. 1544; 46 U.S.C. 375, 391a, 392, 404, 407, 408, 411, 367)

Section 55.19-6 (b) is amended to read as follows:

(b) *Computations.* The maximum allowable working pressure and minimum thickness of pipe in Class I shall be computed by the following formulas:

$$W=\frac{2S}{D}(T-C) \qquad (61)$$

$$T=\frac{WD}{2S}+C \qquad (62)$$

where

W=maximum allowable working pressure, in pounds per square inch, except as provided in subparagraph (c), for feed and blow-off piping.
T=thickness of pipe, in inches.
D=actual external diameter of pipe, in inches.
S=allowable fiber stress, in pounds per square inch of cross-sectional area.
C=0.1 for steel, wrought iron, or brass pipe.
C=0.06 for seamless copper pipe exceeding 1 inch in outside diameter.

TABLE P-2—*Maximum allowable fiber stress on Class I pipes of various materials and for various temperatures*

Seamless steel pipe	Maximum allowable fiber stresses for temperatures in °F., not to exceed [1]—						
	700°	750°	800°	850°	900°	950°	1,000°
Grade A	6,750	6,200	5,200	4,200	3,200	2,200	1,200
Grade B [2]	8,550	7,800	6,800	5,550	4,200	3,200	1,700
Carbon Molybdenum P1	8,250	8,000	7,000	6,000	5,000	4,000	3,000

[1] Where the temperature differs from those in the table, the value of S may be determined by interpolation.
[2] Seamless medium-carbon steel pipe may be used for the construction of drum shells, and shall be computed in accordance with formulas provided in § 52.2-3 or § 52.2-6 for cylindrical shells.

Welded steel pipe (temperature not to exceed 450° F.), S=4,800.

Welded iron pipe (temperature not to exceed 450° F.), S=4,400.

Seamless copper pipe (temperature not to exceed 406° F.), S=3,500.

Brazed copper pipe (temperature not to exceed 406° F.), S=2,625.

Seamless brass pipe (temperature not to exceed 406° F.), S=3,500.

* * * (R.S. 4405, 4417a, 4418, 4426, 4429, 4430, 4433, as amended, 49 Stat. 1544; 46 U.S.C. 375, 391a, 392, 404, 407, 408, 411, 367)

Section 55.19-8 (e) is amended by changing the first sentence to read as follows:

§ 55.19-8 *Flange standards.*

* * * * *

(e) *Methods of attachment.* Flanges shall be attached to the piping by the following approved methods as shown in figures P-1 to P-10 inclusive. * * * (R.S. 4405, 4417a, 4418, 4426, 4429, 4433, as amended, 49 Stat. 1544; 46 U.S.C. 375, 391a, 392, 404, 407, 411, 367)

Section 55.19-8 (e) is amended by deleting Fig. P-2, Fig. P-6, and Fig. P-9 and inserting the following new Fig. P-2, Fig. P-6, and Fig. P-9, respectively, in their stead:

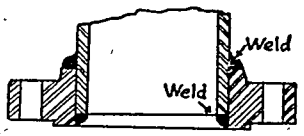

FIG. P-2

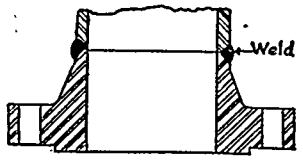

FIG. P-6

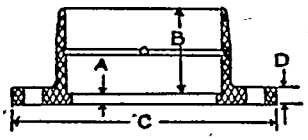

FIG. P-9

* * * (R.S. 4405, 4417a, 4418, 4426, 4429, 4430, 4433, 4434, as amended, 49 Stat. 1544; 46 U.S.C. 375, 391a, 392, 404, 407, 408, 411, 412, 367)

Section 55.19-8 (e) is amended by deleting the center heading "Class I Piping" which immediately precedes the descriptive paragraphs for Figure P-1 to Figure P-10, inclusive. * * * (R.S. 4405, 4417a, 4418, 4426, 4429, 4430, 4433, 4434, as amended, 49 Stat. 1544; 46 U.S.C. 375, 391a, 392, 404, 407, 408, 411, 412, 367)

Section 55.19-8 (e) is amended by changing the descriptive paragraph for Figure P-1 to read as follows:

Figure P-1: Screwed threads may be used for Class I piping having diameters not exceeding two inches nominal pipe size. For Class II piping, screwed threads may be used without diameter limitations. * * * (R.S. 4405, 4417a, 4418, 4426, 4429, 4430, 4433, 4434, as amended, 49 Stat. 1544; 46 U.S.C. 375, 391a, 392, 404, 407, 408, 411, 412, 367)

Section 55.19-8 (e) is amended by changing the descriptive paragraph for Figure P-2 to read as follows:

Figure P-2: Slip-on flanges may be used for Class I piping having diameters not exceeding 2½ inches nominal pipe size and for Class II piping without diameter limitation. The face of the flange shall extend beyond the end of the piping a distance at least equal to the thickness of the piping, and shall be secured to the pipe by a full fillet weld. The neck of the flange shall also be secured to the pipe by a full fillet weld. * * * (R.S. 4405, 4417a, 4418, 4426, 4429, 4430, 4433, 4434, as amended, 49 Stat. 1544; 46 U.S.C. 375, 391a, 392, 404, 407, 408, 411, 412, 367)

Section 55.19-8 (e) is amended by changing the descriptive paragraph for Figure P-3 to read as follows:

Figure P-3: Copper pipe may be expanded into grooves in the hub of a flange and the end flanged over into a recess in the face of the flange, the width of the flange on the edge of the pipe to be at least three times the thickness of the pipe. This flange to be used for Class II piping only. * * * (R.S. 4405, 4417a, 4418, 4426, 4429, 4430, 4433, 4434 as amended, 49 Stat. 1544; 46 U.S.C. 375, 391a, 392, 404, 407, 408, 411, 412, 367)

Section 55.19-8 (e) is amended by changing the descriptive paragraph for Figure P-6 to read as follows:

Figure P-6: Welding neck flanges may be used for all piping provided the pipe is butt welded to the flange. The butt joint shall be either double welded or single V welded with a backing-up strip on the inside. For Class II piping when the single V joint is used, the backing-up strip may be omitted provided the weld is chipped or ground off flush on the root side of the weld. * * * (R.S. 4405, 4417a, 4418, 4426, 4429, 4430, 4433, 4434, as amended, 49 Stat. 1544; 46 U.S.C. 375, 391a, 392, 404, 407, 408, 411, 412, 367)

Section 55.19-8 (e) is amended by changing the descriptive paragraph for Figure P-7 to read as follows:

Figure P-7: Pipe may be attached to high hub flanges by shrinking the flange onto the end of the pipe, and flaring the end of the pipe to an angle of not less than 20°. This flange limited to a maximum pressure of 250 pounds per square inch and a temperature not exceeding 450° F. For Class II piping, the same requirements apply. * * * (R.S. 4405, 4417a, 4418, 4426, 4429, 4430, 4433, 4434, as amended, 49 Stat. 1544; 46 U.S.C. 375, 391a, 392, 404, 407, 408, 411, 412, 367)

Section 55.19-8 (e) is amended by changing the descriptive paragraph for Figure P-8 to read as follows:

Figure P-8: Pipe may be attached to flanges by expanding the pipe into grooves in the bore of the flange, and flaring the end of the pipe to an angle of not less than 20°. This flange limited to a maximum pressure of 250 pounds per square inch and a temperature not exceeding 500° F. For Class II piping, it will not be necessary to flare the ends of the pipe. * * * (R.S. 4405, 4417a, 4418, 4426, 4429, 4430, 4433, 4434, as amended, 49 Stat. 1544; 46 U.S.C. 375, 391a, 392, 404, 407, 408, 411, 412, 367)

Section 55.19-8 (e) is amended by changing the descriptive paragraph for Figure P-10 to read as follows:

Figure P-10: Copper pipe may be attached to flanges by inserting the pipe in the flange and beading the end of the pipe over into a recess in the face of the flange. The width of the flange on the edge of the pipe to be not less than three times the thickness of the pipe after which the pipe shall be securely braced to the wall of the flange. This flange limited to use at a maximum temperature of 406° F. It is not allowed to be used in connection with superheated steam and is limited to use with saturated steam of not over 180 pounds per square inch. For hydraulic service at temperatures of not over 150° F., it may be used for pressures not exceeding 1,000 pounds per square inch. * * * (R.S. 4405, 4417a, 4418, 4426, 4429, 4430, 4433, 4434, as amended, 49 Stat. 1544; 46 U.S.C. 375, 391a, 392, 404, 407, 408, 411, 412, 367)

Section 55.19-11 is amended by changing the cross reference at the end thereof to read as follows:

§ 55.19-11 *Miscellaneous piping, Class II.*

* * * * *

CROSS REFERENCE: For Figures P-1, P-10, and Tables P-3 to P-11, see § 55.19-8.

(R.S. 4405, 4417a, 4418, 4426, 4430, 4433, as amended, 49 Stat. 1544; 46 U.S.C. 375, 391a, 392, 404, 408, 411, 367)

Section 55.19-14 is amended to read as follows:

§ 55.19-14 *Independent fuel piping and tanks (emergency units)*—(a) *Scope.* Vessels carrying passengers shall be allowed to carry such quantities of gasoline or any of the products of petroleum as may be necessary to supply the emergency lighting and/or wireless system when contained in tanks constructed and installed in accordance with the following requirements. The supply of gasoline for emergency units shall be limited to 40 gallons and the supply of heavier fuel oils shall be limited to fifteen long tons (2,240 lbs.).

(b) *Gasoline tanks*—(1) *Construction.* The tanks shall be of cylindrical form and may be constructed of any of the following materials: Wrought iron, mild steel, or of corrosion-resistant alloys suitable for the purpose, and shall have a minimum thickness of 0.125". Tanks constructed of ferrous metals less than 0.1875" in thickness shall be galvanized by the hot-dipped process both inside and outside. Joints shall be riveted, brazed, or welded, except that soldered joints may be used on small tanks of 20 gallons or less capacity, provided the solder used has a melting point of not less than 450° F. All spuds for pipe connections shall be securely riveted, brazed,

welded, or soldered to the tank. No tubular gauge glasses or try-cocks shall be fitted to tanks.

(2) *Installation.* The tanks shall be located on the uppermost deck outside the engine compartment as close to the engine as practicable and so arranged as to permit a free circulation of air all around them. When installed, longitudinal seams shall be located as near the top of the tank as practicable. The tanks shall be properly secured and accessible for complete external examination.

(3) *Tests.* Tanks shall be tested to a hydrostatic pressure of 15 pounds per square inch gauge after installation.

(c) *Heavy oil tanks*—(1) *Construction.* The tanks may be of either cylindrical or rectangular form and may be constructed of any of the following materials: Wrought iron, mild steel, or of any corrosion-resistant alloys suitable for the purpose. Tanks designed for capacities of 40 gallons or less shall have a minimum thickness of 0.0625". Tanks designed for capacities of over 40 gallons shall have a minimum thickness of 0.125". Joints shall be riveted, brazed, or welded, except that soldered joints may be used on small tanks of 20 gallons or less capacity provided that the solder used has a melting point of not less than 450° F. Tanks shall be provided with swash plates and braces where necessary. The material used shall be the same as the tank. All spuds for pipe connections shall be securely riveted, welded, brazed, or soldered to the tank. No tubular gauge glasses or try-cocks shall be fitted to tanks.

(2) *Installation.* The tanks shall be located in an adequately ventilated steel or iron compartment on the deck above the weather deck. Tanks exposed to a temperature in excess of 100° F. shall be properly insulated, provided that no tank shall be located in any compartment where the temperature exceeds 150° F. When cylindrical tanks are installed, longitudinal seams shall be located as near the top of the tank as practicable. The tanks shall be properly secured and accessible for complete internal and external examination.

(3) *Tests.* Tanks shall be tested to a hydrostatic pressure of 10 pounds per square inch gauge after installation.

(d) *Outage.* When filling the tanks with gasoline or other petroleum products, an outage of 2 percent shall be provided.

(e) *Piping connections.* (1) The fuel piping for all tanks shall comply with § 55.19 C.F.R. and in addition it shall also comply with the following requirements.

(2) It shall be run in sight wherever practicable, but protected from mechanical injury and effectively secured against vibration.

(3) The filling pipe for each tank shall be entirely independent of other connections and shall extend nearly to the bottom of the tank.

(4) The supply pipe returning to the engine shall enter at the top of each tank and shall extend nearly to the bottom of the tank.

(5) Shut-off valves or cocks of a suitable type shall be installed in supply lines and located in accessible positions at the tank.

(6) Similar shut-off valves shall be located in the supply lines close to the carburetor or fuel pumps.

(7) No outlets for drawing fuel shall be permitted in engine compartments.

(8) Open drains for removing water from the fuel tanks are not permitted.

(f) *Filling and sounding connections.* Filling and sounding pipes for fuel oil tanks shall terminate on deck and be fitted with suitable shut-off valves or deck plugs.

(g) *Vents.* Each tank shall be fitted with a vent, the cross-sectional area of which shall be not less than the area of the filling pipe. The vents shall terminate in the atmosphere at least two feet above the deck and not less than three feet from any opening into living quarters. All vent pipes shall terminate with U-bends and shall be fitted with flame screens or approved flame arresters. (R.S. 4405, 4417a, 4418, 4426, 4433, as amended, 49 Stat. 1544; 46 U.S.C. 375, 391a, 392, 404, 411, 367)

Section 55.19–15 (a) is amended to read as follows:

§ 55.19–15 *Oil transfer and filling systems.* * * *

(a) Application to the Secretary of Commerce for permission to use petroleum or other mineral oils as fuel shall be made in triplicate on the prescribed blank form, and shall be forwarded through the local inspectors of the district where the installation is to be made. Plans in triplicate of the complete installation shall be submitted to the Bureau. The plans shall receive approval of the Bureau before permission can be granted to use oil as fuel on vessels. * * * (R.S. 4405, 4417a, 4418, 4426, 4474, as amended, 49 Stat. 1544; 46 U.S.C. 375, 391a, 392, 404, 467, 367)

Section 55.19–15 (h) is amended to read as follows:

(h) In fuel-oil tanks, sections of piping for heating the oil may be joined by welding in lieu of flange connections. The two sections to be joined shall be butted and a sleeve shall cover the joint. The sleeve shall be of the same material, its length shall be at least one-half inch more than the diameter of the pipe and it shall be located with the joint midway of its length. The ends of the sleeve shall be welded to the pipe. An approved form of saddle butt-welded joint may be used in lieu of the sleeve joint. The welding shall be done by welders certificated by this Bureau to weld pipe or plate. * * * (R.S. 4405, 4417a, 4418, 4426, 4429, 4430, 4433, as amended, 49 Stat. 1544; 46 U.S.C. 375, 391a, 392, 404, 407, 408, 411, 367)

Section 55.19–15 (k) (1) is amended to read as follows:

(1) All discharge piping from the pumps to the burners shall be of extra heavy seamless steel conforming to the requirements of §§ 51.11–1 to 51.11–9. * * * (R.S. 4405, 4417a, 4418, 4426, 4429, 4430, 4433, as amended, 49 Stat. 1544; 46 U.S.C. 375, 391a, 392, 404, 407, 408, 411, 367)

Section 55.19–17 is amended to read as follows:

§ 55.19–17 *Welded sea chests.* Sea chests may be constructed by fusion welding. (R.S. 4405, 4417a, 4418, 4426, 4429, 4430, 4433, as amended, 49 Stat. 1544; 46 U.S.C. 375, 391a, 392, 404, 407, 408, 411, 367)

PART 56—FUSION WELDING

Section 56.20–2 (g) is amended to read as follows:

§ 56.20–2 *Definitions.* * * *

* * * * *

(g) *Welder.* A person who operates welding equipment, either manual or automatic, other than an operator of submerged melt electric welding equipment. (R.S. 4405, 4417a, 4418, 4426, 4429, 4430, 4433, as amended, 49 Stat. 1544; 46 U.S.C. 375, 391a, 392, 404, 407, 408, 411, 367)

Paragraphs (a) to (c), inclusive, of § 56.20–3 are amended to read as follows:

§ 56.20–3 *Qualification tests for welders.* (a) Before being permitted to make welds subject to inspection by the Bureau each welder shall pass the applicable tests specified in Table W–1. The tests shall be made with the same equipment to be used in production or with equipment equivalent thereto. The welding and testing of the specimens required shall be witnessed by an inspector.

NOTE: The tests specified herein bear the same number as, and are identical with, tests acceptable to the American Bureau of Shipping and the Bureau of Ships of the Navy Department. Welders qualified in accordance with these tests by an inspector of the American Bureau of Shipping, the Bureau of Ships of the Navy Department, or this Bureau will be acceptable to the Bureau.

(b) A welder doing satisfactory welding work continuously will not be required to be retested. A welder who has not been engaged in actual use of the welding process for which he was qualified for a period exceeding three months shall be required to pass the applicable tests before being permitted to resume work. A welder may be required by the inspector to repeat and pass the tests at any time if, in the inspector's opinion, the welder's work indicates a reasonable doubt as to his ability.

(c) All welders shall pass the qualification tests for the type and thickness of material, the kind of welding and position of work involved as specified in Table W–1. * * * (R.S. 4405, 4417a, 4418, 4426, 4429, 4430, 4433, as amended, 49 Stat. 1544; 46 U.S.C. 375, 391a, 392, 404, 407, 408, 411, 367)

Section 56.20–3 is amended by the insertion of a new Table W–1 to follow paragraph (c) which reads as follows:

TABLE W-1—*Required qualification tests*

	Positions in which welded joints are located on job		
	Flat, horizontal, vertical and overhead	Flat and vertical	Flat position only
On plate ¾ inch or less in thickness. [1 2]	Test No. 1 in vertical and overhead positions.	Test No. 1 in vertical position.	Test No. 1 in flat position.
On material of unlimited thickness. [3]	Test No. 2 in vertical and horizontal positions.	Test No. 2 in vertical position.	Test No. 2 in flat position.
On piping or tubing 3/16 inch or less in thickness [4].	Test No. 3 with axis of pipe in horizontal and vertical fixed positions, provided welder has previously passed Tests Nos. 1 or 2 in vertical and overhead positions.		Test No. 3 with axis of pipe in horizontal position and rolled provided welder has previously been qualified by Tests Nos. 1 or 2 for the flat position.
On piping or tubing of unlimited thickness. [4 5 6]	Test No. 4 in horizontal and	vertical fixed positions.....	Test No. 4 in horizontal position and rolled.
For tack welders. [7].....	Test No. 5 in vertical and overhead positions.	Test No. 5 in vertical position.	
On material of unlimited thickness (for base metals of high conductivity).	Test No. 6 in vertical and overhead positions (for gas welding only).	Test No. 6 in vertical position (for gas welding only).	Test No. 6 in flat position (arc or gas).

[1] Where the maximum thickness of material on which a welder may have occasion to work throughout a period governed by a test is indeterminate, the inspector may, if desired, require the welder to qualify under unlimited thickness requirements.

[2] Where the maximum plate thickness to be welded in production is less than ⅜" the contractor may, with the permission of the inspector, use the following modification of Test No. 1: The test plate thickness shall be the maximum to be welded in production, but shall not be less than 3/16. The root opening shall be not more than the diameter of the welding rod or electrode core wire to be used. The backing strap thickness shall not be less than ⅛".

[3] Where the maximum plate thickness to be welded in production is between ¾" and 1½", Test No. 2 may, with the permission of the inspector, be conducted on plate of such maximum thickness.

[4] Tests Nos. 3 and 4 welded in the shop in the flat (downhand) position need not be welded in a confined space. A welder qualified to weld on plate in the vertical position may be permitted to weld on pipe in the flat position.

[5] Welders qualified under the requirements of Test No. 4 will be considered as qualified to make welds governed by Tests Nos. 1, 2 and 3 for the same positions.

[6] The macro specimen indicated in Figure W-1C for Test No. 4 may be required at the option of the inspector and may be taken at any location in the joint.

[7] Tack welding may be done by any welder qualified in accordance with Tests Nos. 1, 2, 3, or 4.

* * * (R.S. 4405, 4417a, 4418, 4426, 4429, 4430, 4433, as amended, 49 Stat. 1544; 46 U.S.C. 375, 391a, 392, 404, 407, 408, 411, 367)

Section 56.20-3 (d) is amended to read as follows:

(d) Qualification Tests Nos. 1, 2, 4, 5 and 6 shall be the welding of specimens in accordance with Figures W-1, W-1A, W-1C, W-1D and W-1E respectively. Qualification Test No. 3 shall be the welding, hydraulic testing and visual inspection of pipe assemblies or, as an alternate removal of specimens for macroscopic inspection in accordance with Figure W-1B. * * * (R.S. 4405, 4417a, 4418, 4426, 4429, 4430, 4433, as amended, 49 Stat. 1544; 46 U.S.C. 375, 391a, 392, 404, 407, 408, 411, 367)

Section 56.20-3 is amended by the insertion of the new Figures W-1, W-1A, W-1B, W-1C, W-1D, W-1E, and W-1F, which are to follow paragraph (d), as follows:

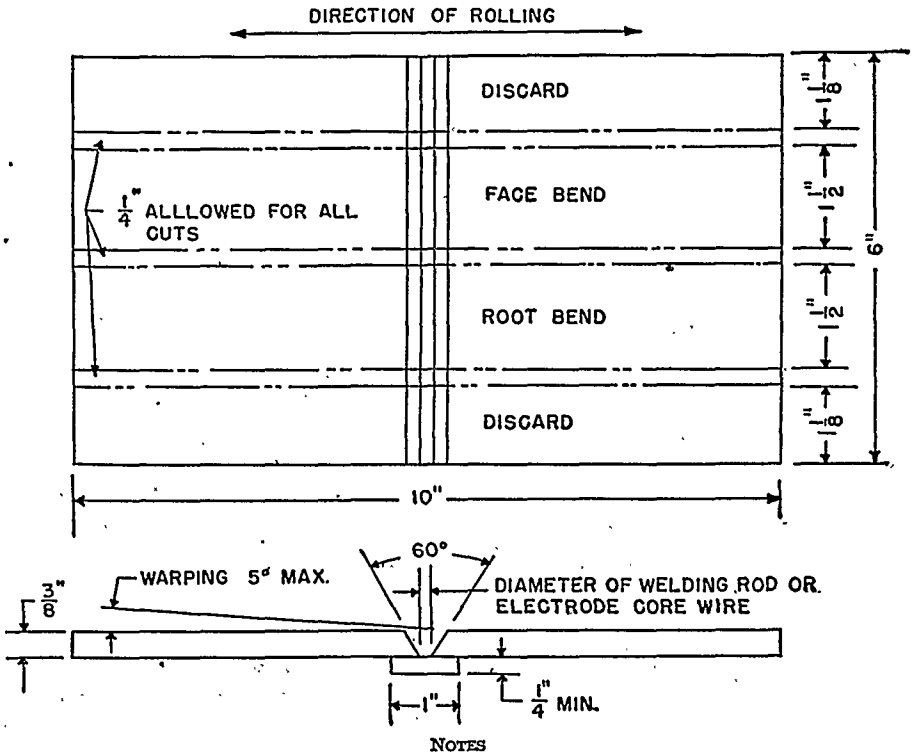

NOTES

1. Arc welds shall be made with the maximum size of electrodes to be used in production. Gas welds shall be made with 3/16" diameter welding rods.
2. Machine reinforcement and backing strap flush. Do not remove any undercutting.
3. Machining shall be done transverse to weld.
4. All specimens shall be machined or sawed from plate.
5. Backing strap shall be contiguous with plates.
6. Arc welds made in the vertical position shall be welded upwards.
7. Welding shall be done from one side only.
8. Round edges of specimens to a radius of ⅛ maximum.

FIG. W-1.—Welder's qualification test No. 1.

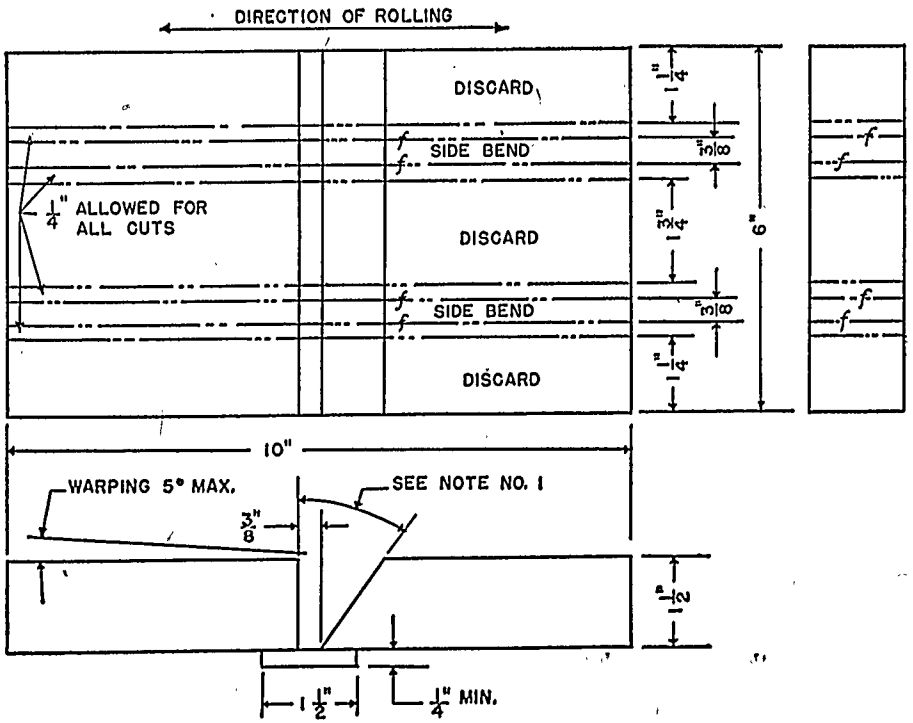

NOTES

1. When welding in the flat and vertical positions of welding the groove angle shall be 25°; when welding in the horizontal position the groove angle shall be 35° and the unbeveled plate shall be located on the top side of the joint.
2. Backing strap shall be contiguous with plates.
3. Each pass of the weld shall be made with the same size of welding rod or electrode to be used in production.
4. Arc welds made in the vertical position shall be welded upwards.
5. Welding shall be done from one side only.
6. Machine reinforcement and backing strap flush. Do not remove any undercutting.
7. All specimens shall be machined or sawed from plate.
8. Machining shall be done transverse to weld.
9. Round edges of specimens to a radius of 1/8 maximum.

FIG. W-1A.—Welder's qualification test No. 3.

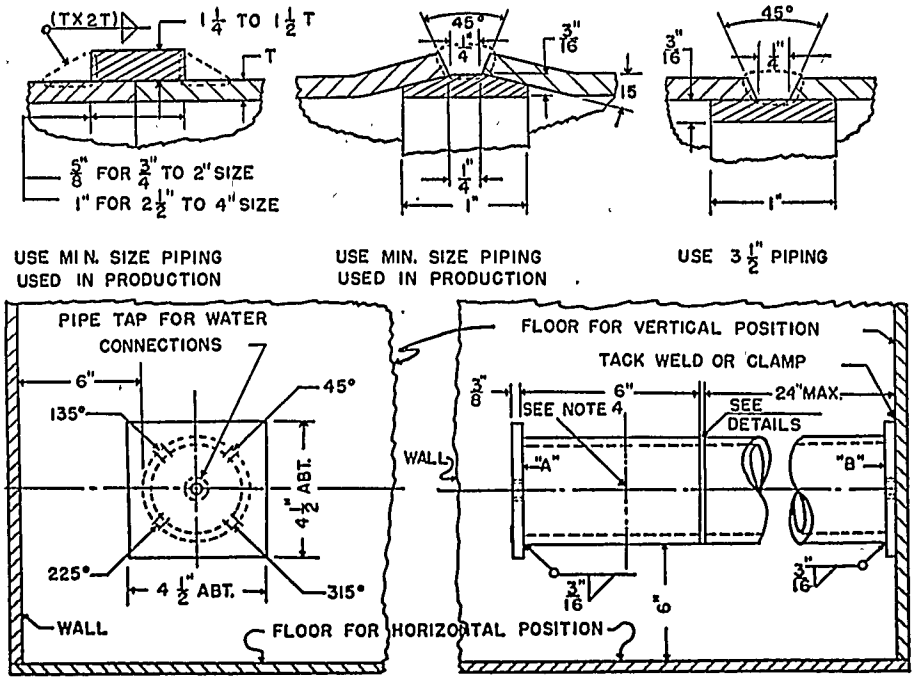

[Position in which specimens are welded. One assembly in horizontal fixed position. One assembly in vertical fixed position]

NOTES

1. When slip-on sleeves and plain type backing rings are used in production, plain type backing rings shall be used in this test. When all three types are used in production, flare-type backing rings shall be used in this test.
2. Parts shall be galvanized where required.
3. Weld shall be deposited in a minimum of two layers.
4. Saw cut after pressure test for visual inspection.
5. No icicles or reduction of area of piping shall be permitted.
6. Omit end plates "A" and "B" when etch test is used in lieu of hydrostatic test.
7. Remove macro specimens from 45°, 135°, 225° and 315° points of the welded butt joints as indicated. (For etch test only.)
8. Mark top and front of piping to insure proper location of specimens when etch test is used in lieu of hydrostatic test.
9. Welding shall be done from one side only.
10. For arc welding use the maximum size of electrode to be used in production. For gas welding use 1/8" diameter welding rod.

FIG. W-1B.—Welder's qualification test No. 3.

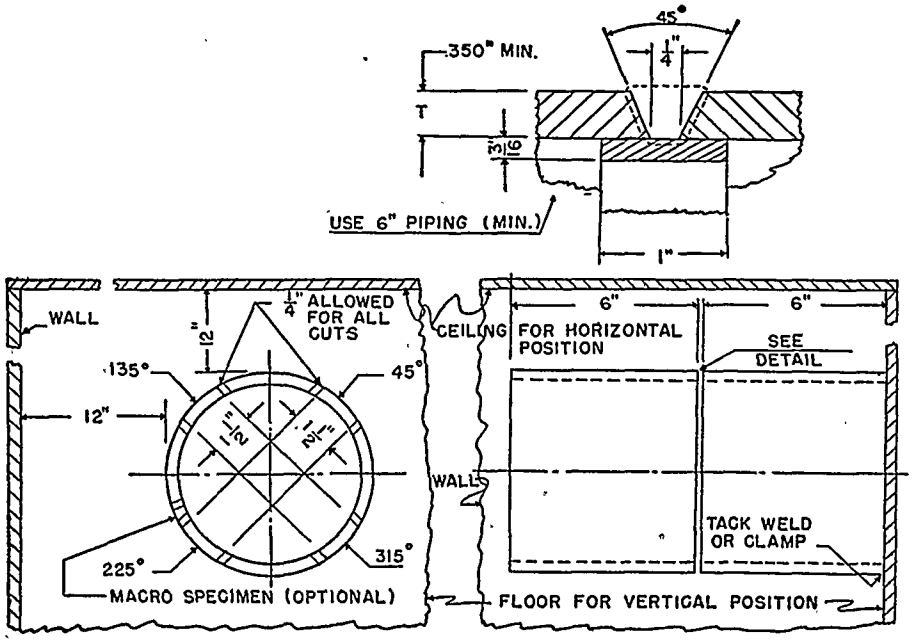

[Position in which specimens are welded. One assembly in horizontal fixed position. One assembly in vertical fixed position]

NOTES

1. Each pass of the weld shall be made with the same size of welding rod or electrode that will be used in production.
2. Machine reinforcement and backing strap flush. Do not remove any undercutting.
3. Machining shall be done transverse to weld.
4. All specimens shall be machined or sawed from piping.
5. Round edges of bend specimens to a radius of 1/8 max.
6. Mark top and front of piping to insure proper location of specimens.
7. Remove face-bend specimens from 45° and 225° points, and root-bend specimens from 135° and 315° points as indicated.
8. Welding shall be done from one side only.
9. If piping of greater wall thickness than 0.380" is used in this test, piping may be machined to 0.350" to 0.380" before welding, or the bending jig may be made in accordance with the actual thickness, T, of piping used.

FIG. W-1C.—Welder's qualification test No. 4.

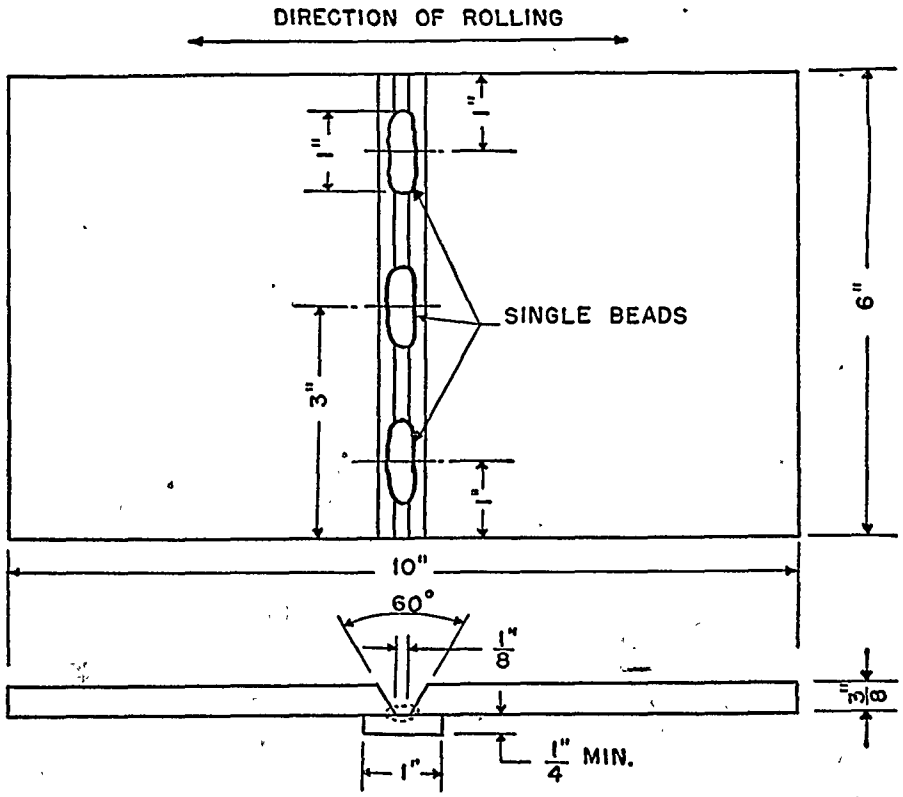

NOTES

1. 1/8" diameter electrode shall be used.
2. Backing strap shall be contiguous with plates.
3. All welds welded in the vertical position shall be welded upwards.
4. Specimen shall be bent in one piece with backing strap in place and face of weld in tension.
5. Weld fractures shall exhibit no unfused areas on backing strap or sides of groove throughout length of each tack.

FIG. W-1D.—Welder's qualification test No. 5.

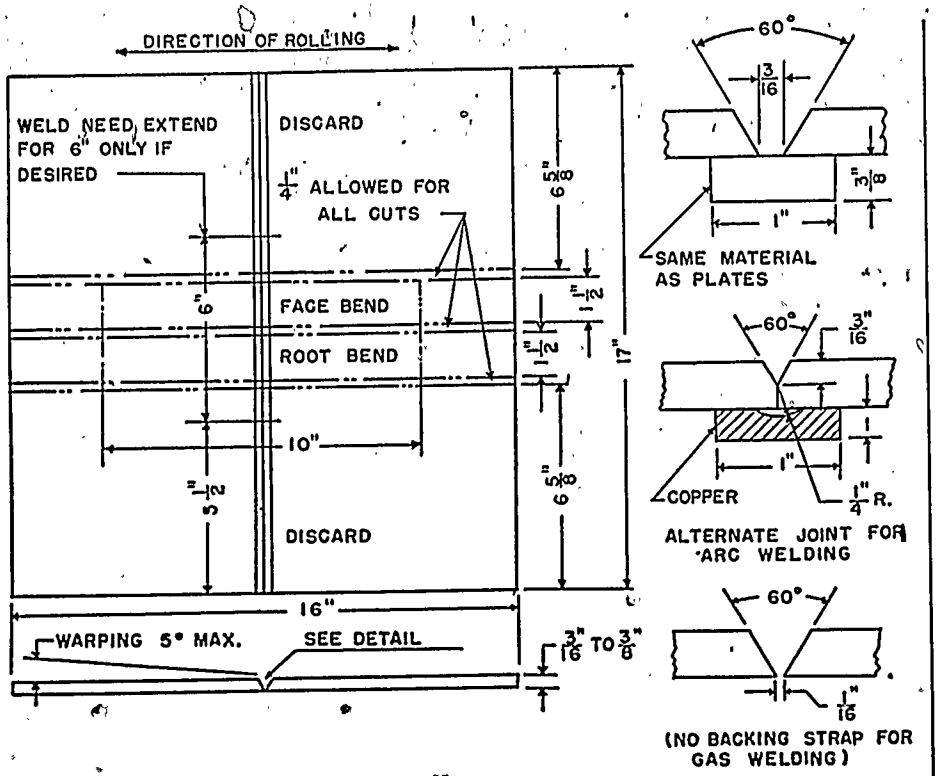

NOTES

1. Weld shall be made on the maximum thickness plate, within limits indicated, with maximum size welding rod or electrode to be used in production.
2. For gas welding machine reinforcement on both sides flush. For arc welding machine reinforcement and backing strap flush. Do not remove any undercutting.
3. Machining shall be done transverse to weld.
4. All specimens shall be machined or sawed from plates.
5. Backing strap shall be contiguous with plates.
6. Arc welds welded in the vertical position shall be welded upwards.
7. Welding shall be done from one side only.
8. Round edges of specimens to a radius of $\frac{T}{6}$ maximum.

FIG. W-1E.—Welder's qualification test No. 6.

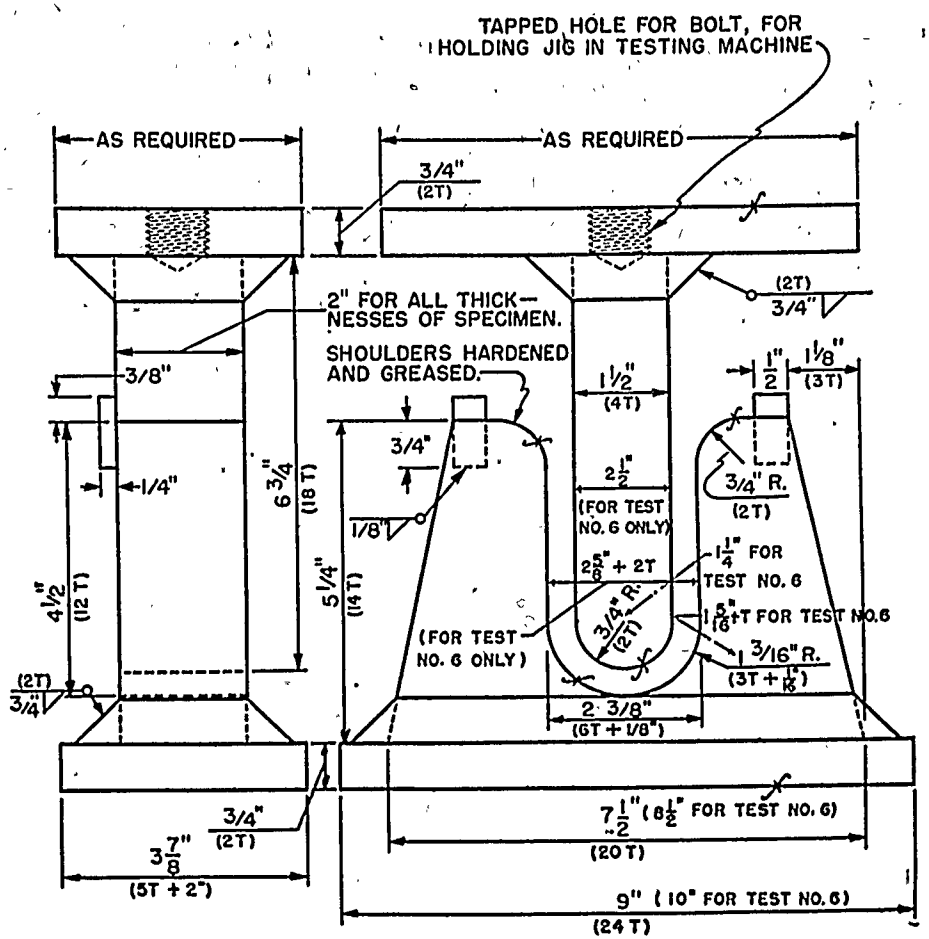

NOTES

1. T = thickness of test specimens.
2. Specific dimensions are for 3/8" test specimens.
3. Hardened rolls may be used on shoulders if desired.

FIG. W-1F.—Standard qualification test bending jig.

* * * (R.S. 4405, 4417a, 4418, 4426, 4429, 4430, 4433, as amended, 49 Stat. 1544; 46 U.S.C. 375, 391a, 392, 404, 407, 408, 411, 367)

Paragraphs (e) to (m), inclusive, of § 56.20-3 are amended to read as follows:

(e) Specimens for Tests Nos. 1, 2 and 4 shall be bent to the full capacity of the jig shown in Figure W-1F for ⅜" specimens. The plate for Test No. 5 shall be bent to fracture of the tack welds in the standard jig for ⅜" specimens. Specimens for Test No. 1, modified, (See Note No. 2 of Table W-1) and for Test No. 4 modified (See Note No. 9 of Figure W-1C) shall be bent to the full capacity of a jig having a contour proportional to the thickness of the test specimens involved as indicated in Figure W-1F. Specimens for Test No. 6 shall be bent to the full capacity of a jig having a contour proportional to the thickness of the test specimens involved and having the specific dimensions shown in Figure W-1F for Test No. 6.

(f) Tube specimens for Test No. 3 shall remain tight when subjected to a hydrostatic test pressure necessary to impose a hoop stress of 30,000 pounds p. s. i. as calculated by the following formula:

$$P=\frac{S\times T}{R}$$

When P is the required hydrostatic test pressure; S is 30,000 pounds per square inch; T is the wall thickness of the tube in inches not to exceed 0.120 inches; and *R* is the inside radius of the tube in inches. As an alternate for the hydrostatic test, four transverse specimens may be removed from the welded joint of Test No. 3 at 45°, 135°, 225° and 315° points for macroscopic inspection consisting of etching and visual inspection with a magnifying glass. Macroscopic examination shall show complete penetration into the root of the weld and freedom from cracks, slag inclusions, porosity, or other defects.

(g) Root bend specimens shall be bent with the root of the weld in tension; face bend specimens with the face of the weld in tension; and side bend specimens with that side suspected of being the worse of the two, in tension. In testing a specimen the two members of the jig shall be forced together until the specimen conforms to a U-shape, and until a 1/32" diameter wire cannot be placed between the specimen and any point on the curvature of the plunger.

(h) Any specimen for Tests Nos. 1, 2, 4 and 6 in which a crack or opening exists before the bending, or results from the bending, exceeding ⅛" measured in any direction shall be rejected. No elongation data are required.

(i) No preheating shall be done in any of the tests, and the temperature of previously deposited weld metal shall not be over 212° F. at time of deposition of subsequent bead or layer.

(j) No peening shall be done in Tests Nos. 1, 3, 4, 5 and 6. Peening may be done on each layer in Test No. 2 except the first and last layers.

(k) No stress relieving shall be done on Tests Nos. 1, 3, 5 and 6. On Test No. 2, before machining specimens from the joint, the plate shall be stress relieved by maintaining it at 1,150° F. (±50° F.) for one hour per inch of thickness followed by slow cooling in the furnace to a temperature below 500° F. Stress relieving, as outlined for Test No. 2 above, may be done on Test No. 4, provided such procedure is being used in production work.

(l) Tests Nos. 1, 2, 3, 4 and 6 are applicable for either metal arc welders or gas welders. Test No. 5 is for arc welders only. For arc welding, the passing of these tests with direct current equipment shall qualify the welder for using direct current equipment only and the passing of these tests with alternating current equipment shall qualify the welder for using alternating current equipment only. Passing of these tests with direct current equipment using either straight polarity or reverse polarity shall qualify the welder for both polarities.

(m) Results of qualification tests shall be entered and maintained in ink on a record card, the face and back of which shall be similar to Figures W-1G and W-1H, respectively. * * * (R.S. 4405, 4417a, 4418, 4426, 4429, 4430, 4433, as amended, 49 Stat. 1544; 46 U.S.C. 375, 391a, 392, 404, 407, 408, 411, 367)

Section 56.20-3 is amended by deleting the note and Figure W-1 which immediately precede paragraph (n) and inserting in their stead new Figures W-1G and W-1H, as follows:

RECORD CARD OF WELDER'S QUALIFICATION TESTS

Name:

Employer:

Approved for:

Test No.	Process	Base Metal	Positions	Diam. of electrode	Date of Test	Signature of Inspector	Agency

FIG. W-1G.

Date of birth:

Place of Birth:

Symbol for marking work:

Employed as a welder under

Test No.	From	To

(Photograph)

Welder's signature:

FIG. W-1H.

* * * (R.S. 4405, 4417a, 4418, 4426, 4429, 4430, 4433, as amended, 49 Stat. 1544; 46 U.S.C. 375, 391a, 392, 404, 407, 408, 411, 367)

Section 56.20–4 is amended by deleting Figure W–4 and inserting a new Figure W–4 in its stead as follows:

§ 56.20–4 *Class I.* * * *

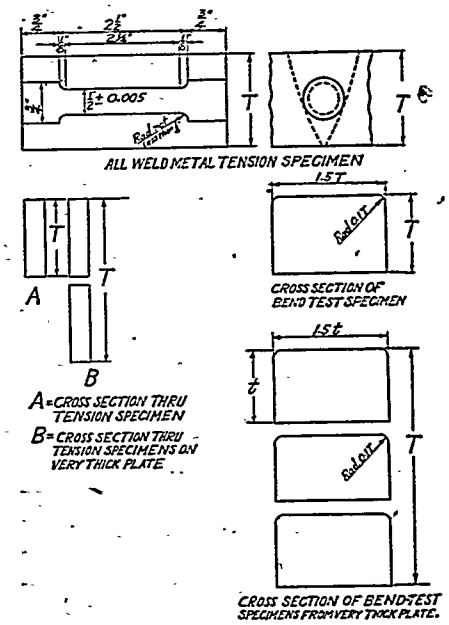

FIG. W–4.—Details of test specimens.

* * * (R.S. 4405, 4417a, 4418, 4426, 4429, 4430, 4433, as amended, 49 Stat. 1544; 46 U.S.C. 375, 391a, 392, 404, 407, 408, 411, 367)

Section 56.20–4 is amended by deleting Figure W–5 (b) and inserting a new Figure W–5 (b) in its stead as follows:

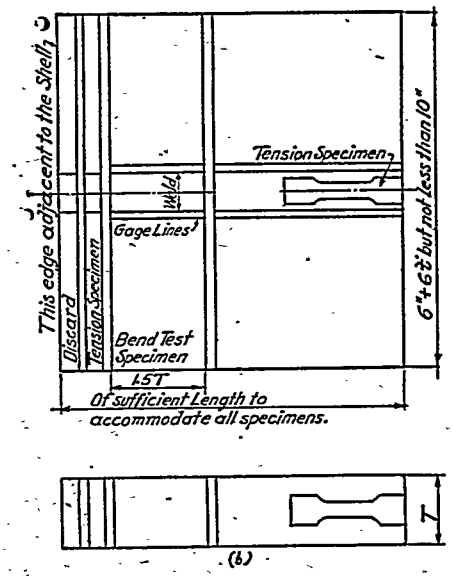

FIG. W–5.

* * * (R.S. 4405, 4417a, 4418, 4426, 4429, 4430, 4433, as amended, 49 Stat. 1544; 46 U.S.C. 375, 391a, 392, 404, 407, 408, 411, 367)

Section 56.20–4 (j) is amended to read as follows:

(j) *Test specimens.* The inspector shall select one of the two welded test plates, from which the coupons for tension and bend tests shall be removed, as shown in Figures W–4 and W–5, and be of the dimensions shown in Figures W–2, W–3, and W–4. * * * (R.S. 4405, 4417a, 4418, 4426, 4429, 4430, 4433, as amended, 49 Stat. 1544; 46 U.S.C. 375, 391a, 392, 404, 407, 408, 411, 367)

Section 56.20–4 is amended by deleting paragraphs (r), (s), (t), (u), (v), and (w) and by the insertion of new paragraphs (r), (s), (t), and (u) which read as follows:

(r) Retests: Should any of the tests fail to meet the requirements by more than 10 percent, no retests shall be allowed.

(s) Should any of the tests fail to meet the requirements by 10 percent or less, retests shall be allowed on specimens cut from the second welded test plate.

(t) The retests shall comply with the requirements. For either of the tension retests, two specimens shall be cut from the second test plate, and both of these shall meet the requirements.

(u) When there are more than one specimen of the same type and when one or more of the group specimens fail to meet the requirements by 10 percent or less, the retest shall be made on an entire group of specimens, which shall meet the requirements. (R.S. 4405, 4417a, 4418, 4426, 4429, 4430, 4433, 4434, as amended, 49 Stat. 1544; 46 U.S.C. 375, 391a, 392, 404, 407, 408, 411, 412, 367)

Section 56.20–6 (d) (2) is amended to read as follows:

§ 56.20–6 *Class II.*

* * * * *

(d) * * *

(2) Test results: The minimum requirements for the test results shall be the same as specified in § 56.20–4 (s) for Class I vessels with the following exceptions: * * * (R.S. 4405, 4417a, 4418, 4426, 4429, 4430, 4433, 4434, as amended, 49 Stat. 1544; 46 U.S.C. 375, 391a, 392, 404, 407, 408, 411, 412, 367)

Section 56.20–6 (d) (3) is amended to read as follows:

(3) Retest: Retests shall be allowed as provided for in § 56.20–4 (s) for Class I vessels. (R.S. 4405, 4417a, 4418, 4426, 4429, 4430, 4433, 4434, as amended, 49 Stat. 1544; 46 U.S.C. 375, 391a, 392, 404, 407, 408, 411, 412, 367)

Section 56.20–7 (a) is amended to read as follows:

§ 56.20–7 *Class III.* (a) This class includes pressure vessels containing steam or air in which the pressure does not exceed 30 pounds per square inch above atmosphere, and pressure vessels containing liquids in which the pressure does not exceed 200 pounds per square inch, and/or does not exceed a temperature of 250° F., in which the plate thickness does not exceed five-eighths inch, excepting those containing lethal or noxious gases or lethal or noxious liquids. The maximum allowable working pressure of the vessel shall be calculated by formula (1) of § 52.2–3 (b) using a value of $\frac{SE}{F}$ not to exceed the following:

Double-welded butt joints for all joints	8,000
Single-welded butt joints for girth or head joints	6,500
Double full-fillet lap welds for girth joints only	7,000
Plug or intermittent welds for girth or head joints	5,600

* * * (R.S. 4405, 4417a, 4418, 4426, 4429, 4430, 4433, 4434, as amended, 49 Stat. 1544; 46 U.S.C. 375, 391a, 392, 404, 407, 408, 411, 412, 367)

Section 56.20–7 (b) is amended to read as follows:

(b) For single-welded butt joints and for double full-fillet welds for longitudinal joints, the value of $\frac{SE}{F}$ shall not exceed the following:

For material of thickness of less than one-fourth inch, 5,600 pounds per square inch; for material of thickness of one-fourth to three-eighths inch, 7,000 pounds per square inch. * * * (R.S. 4405, 4417a, 4418, 4426, 4429, 4430, 4433, 4434, as amended, 49 Stat. 1544; 46 U.S.C. 375, 391a, 392, 404, 407, 408, 411, 412, 367)

Section 56.20–18 (*Inspectors' report of individual welding operators*), with report form are deleted. (R.S. 4405, 4417a, 4418, 4426, 4429, 4430, 4433, as amended, 49 Stat. 1544; 46 U.S.C. 375, 391a, 392, 404, 407, 408, 411, 367)

Section 56.20–19 is amended to read as follows:

§ 56.20–19 *Welded piping.* (a) Piping may be connected by means of fusion welding for any pressure and for temperatures not exceeding 1,000° F., provided it is done in accordance with the rules in this section.

(b) These rules apply to piping in excess of 125 pounds per square inch. (Class I piping.) They do not apply to piping used in connection with working pressures of 125 pounds or less, operated at normal temperatures. (Class II piping.)

(c) Qualification of welding processes: (1) Before a contractor may weld piping under these rules a representative of the Bureau shall visit the part of his works in which welding is done for the purpose of inspecting the welding plant to make sure he has suitable equipment and to witness the series of tests outlined in subparagraph (2) below.

(2) The tests for qualifying a welding process shall be those embodied in the rules in this section for the testing of welding operators for piping.

(d) Design of piping: The piping shall be designed to avoid excessive strains due to expansion and the working of the ship.

(e) Layout and dimensions of piping: Prints showing the lay-out and dimensions of the piping shall be forwarded to the Director for approval. Sections of the pipe shall be welded in the shop as far as practicable. All welded joints made on shipboard shall be in positions where there is sufficient space to allow proper access for the welding, and such welds

shall be definitely indicated on the plans by the use of appropriate American Welding Society weld symbols or details of the welds. A sufficient number of detachable joints shall be used in installing the piping to facilitate removals. Valves and other fittings may have either flanged or welded connections to the pipes but flanged joints shall be used where necessary to facilitate overhauling of machinery or the valves themselves.

(f) Types of welded joints to be used: Butt joints shall be used for pipes over 2½ inches nominal pipe size and shall be either double-welded or welded with a backing-up strip on the inside of the pipe. Pipes not over 2½ inches nominal pipe size may be connected by ferrules fitted over the ends of the pipe and attached by circumferential fillet welds to the pipe, or by using bell-and-spigot joints and uniting the end of the bell to the outside of the pipe by a circumferential fillet weld.

(g) Stress relieving: (1) All welded joints over 2½ inches nominal pipe size except fire lines and oil lines at normal temperature, shall be stress-relieved.

(2) The welds of plain carbon-steel pipe and adjacent piping for a length of six times the wall thickness of the pipe shall be heated uniformly to at least 1,150° F. and up to 1,250° F. The weld and adjacent piping shall be brought slowly up to within the specified temperature range and held at that temperature for a period of time proportioned on the basis or at least 1 hour per inch of pipe wall thickness and shall be allowed to cool slowly in a still atmosphere. There shall be no cooling other than by the still air around the weld and adjacent parts being stress-relieved in order to assure a gradual fall of temperature along the length of the pipe. For alloy steel piping the stress-relieving and/or heat treatment shall be done in a way demonstrated to be satisfactory.

(3) Where piping is welded to valves it may be impossible to heat the part next to the valve to a uniform temperature for a length of six times the wall thickness without overheating the valve. In such a case the heated zone shall extend to at least 2 inches on the valve side from the line of fusion of the joint and the temperature shall be allowed to diminish gradually toward the valve.

(4) All complicated connections, such as manifolds, shall be stress-relieved as a whole in a furnace provided for the purpose before being taken on shipboard.

(5) The piping shall be so designed that it will be free to expand in a longitudinal direction when the joints are stress-relieved, thus eliminating stresses that might result through contraction of the piping after the stress-relieving.

(h) Radiographic and other tests: All welded joints on piping exceeding 2½ inches in diameter shall be tested either by radiography or by using a paramagnetic powder dusted over the area to make sure that there are no cracks or other defects. Should the quality of a joint be questioned by an inspector of the Bureau the weld shall be cut out and the joint rewelded.

(i) Hydrostatic tests: Hydrostatic tests shall be made on the piping at twice the maximum pressure to which the piping will be subjected in service.

(j) General requirements: Before any qualification tests of welding operators are conducted, each manufacturer shall prepare for test the types of test specimens hereinafter specified for the purpose of qualifying his welding process.

(k) Manufacturer's record of process: A complete record of the manufacturer's process shall be made in the form shown in Fig. W-34 to establish the definite limits of all essential variables involved. The manufacturer shall conduct all welding in accordance with the requirements of his process record, after his process of welding has been approved.

(l) Number, type, and size of test welds: The test specimens shall be prepared in accordance with the requirements of this section. One test specimen shall be prepared for each process and welding position which will be encountered.

(m) Base metal and its preparation: The base material and its preparation for welding shall comply with the manufacturer's process record. For all test welds, the dimensions of the base material shall be such as to provide sufficient material for the test specimens called for. * * * (R.S. 4405, 4417a, 4418, 4426, 4429, 4433, as amended, 49 Stat. 1544; 46 U.S.C. 375, 391a, 392, 404, 407, 411, 367)

Section 56.20-19 is amended by deleting Fig. W-32 (*Positions for which welders and welding processes will be qualified*) and Fig. W-33 (*Standard qualification test bending jig*). * * * (R.S. 4405, 4417a, 4418, 4426, 4429, 4433, as amended, 49 Stat. 1544; 46 U.S.C. 375, 391a, 392, 404, 407, 411, 367)

Section 56.20-19 is further amended by having the position of Fig. W-34 (*Manufacturer's record of process*) changed to immediately follow after paragraph (k). (R.S. 4405, 4417a, 4418, 4426, 4429, 4433, as amended, 49 Stat. 1544; 46 U.S.C. 375, 391a, 392, 404, 407, 411, 367)

PART 57—MARINE ENGINEERING: SUPPLEMENTARY DATA AND REQUIREMENTS

Section 57.21-2 is amended by deleting Form 935 and inserting a new Form 935 reading as follows:

§ 57.21-2 *Forms and affidavits.* * * *

(Form 935)

AFFIDAVIT OF MANUFACTURER OF WATER-TUBE BOILERS

DEPARTMENT OF COMMERCE,
BUREAU OF MARINE INSPECTION AND NAVIGATION.

State of _____, County of _____
On this _____ day of _____, 19____,
I, the undersigned, _____,
(Name)
hereby certify that I am _____
(Title)
of the _____, boiler manu-
(Name of company)
facturer, located at _____,
(City and State)
who has contracted to furnish a water-tube marine boiler to be installed on the steam vessel _____, at _____;
(City and State)
that I am authorized to make this affidavit; that the said boiler is in all respects constructed in accordance with the drawings and specifications approved by the Bureau of Marine Inspection and Navigation in the year _____, and blue prints approved by the United States local inspectors at _____
(City
_____, on _____; that the
and State) (Date)
plates and other materials used in the construction of said boiler meet the requirements specified in the various sections of Parts 50 and 51; also that the boiler complies in all respects with the requirements of Parts 52 to 57, inclusive, Title 46, Code of Federal Regulations; that the plates were manufactured by _____, at
(Name of manufacturer)
_____; that the plates bear
(City and State)
the following serial numbers and inspector's initials:

Plates subject to tensile stress		Plates not subject to tensile stress	
Serial No.	Inspector's initials	Serial No.	Inspector's initials

Min. T. S. _____ lbs. Min. T. S. _____ lbs.

GENERAL PARTICULARS OF BOILER

Type or name _____
Length and diameter of steam drum _____
Length and diameter of water drum _____
Desired working pressure _____ pounds per square inch.
(Signature) _____
Subscribed and _____ to before me this
(Sworn or affirmed)
_____ day of _____, 19__.
[SEAL] (Signature) _____,
Notary Public.

* * * (R.S. 4405, 4417a, 4418, 4426, 4429, 4430, 4433, 4434, as amended, 49 Stat. 1544; 46 U.S.C. 375, 391a, 392, 404, 407, 408, 411, 412, 367)

Section 57.21-2 is amended by deleting Form 935A and inserting a new Form 935A reading as follows:

(Form 935A)

AFFIDAVIT OF MANUFACTURER OF FIRE-TUBE BOILERS

DEPARTMENT OF COMMERCE,
BUREAU OF MARINE INSPECTION AND NAVIGATION.

State of _____, County of _____.
On this _____ day of _____, 19__, I, the undersigned, _____, hereby
(Name)
certify that I am the _____
(Title)
of the _____, located at
(Name of company)
_____, which has contracted
(City and State)
to build a marine boiler to be installed on the steamer _____, at _____;
(City and State)
that I am authorized to make this affidavit; that said boiler is constructed of steel plates manufactured by _____, of
(Name of manufacturer)
_____, and which plates were
(City and State)
tested and inspected by a duly authorized inspector, as provided by the act of Congress

approved June 13, 1933, and are stamped in accordance with §§ 51.1–1 to 51.1–18, inclusive, Title 46, Code of Federal Regulations, and bear the following serial numbers and initials of the inspector.

Plates subject to tensile stress		Plates not subject to tensile stress	
Serial No.	Inspector's initials	Serial No.	Inspector's initials

That the boiler is of the _____ type; length _____; diameter _____; and that the working pressure desired is _____ pounds; that the boiler has been built as described and shown on blue prints approved by the United States local inspectors at _____, on _____,
(City and State) (Date)
and complies in all respects with the requirements of Parts 50 to 57, inclusive, Title 46, Code of Federal Regulations.

(Signature)_____.

Subscribed and _____ to before
(Sworn or affirmed)
me this _____ day of _____, 19__.

[SEAL]

(Signature)_____.
Notary Public.

* * * (R.S. 4405, 4417a, 4418, 4426, 4429, 4430, 4433, 4434, as amended, 49 Stat. 1544; 46 U.S.C. 375, 391a, 392, 404, 407, 408, 411, 412, 367)

Section 57.21–2 is amended by deleting Form 935B and inserting a new Form 935B reading as follows:

(Form 935B)

AFFIDAVIT OF MANUFACTURER OF BOILERS CONSTRUCTED BY FUSION WELDING

DEPARTMENT OF COMMERCE,
BUREAU OF MARINE INSPECTION AND NAVIGATION.

State of _____, County of _____.
On this _____ day of _____, 19__, I, the undersigned _____,
(Name)
hereby certify that I am_____
(Title)
of the _____, boiler manu-
(Name of company)
facturer, located at _____,
(City and State)
who has contracted to furnish a {fire-tube / water-tube} marine boiler to be installed in the steam vessel _____, at _____
(City and State)
_____, that I am authorized to make this affidavit; that the said boiler is in all respects constructed in accordance with the drawings and specifications approved by the board of supervising inspectors of the Bureau of Marine Inspection and Navigation in the year _____, and blue prints approved by the United States local inspectors at _____, on
(City and State)
_____; that the plates and other
(Date)
materials used in the construction of said boiler meet the requirements specified in the various sections of Parts 50 and 51, Title 46, Code of Federal Regulations; also that the joints of this boiler are made by the _____ _____ process of fusion welding
(Metallic-arc)
in strict accordance with the requirements of Part 56, Title 46, Code of Federal Regulations, for Class 1 pressure vessels; that all welded joints have been X-rayed; that said films were actually taken from the joints for which they are certified; that the joints are of the (single or double) V-type and were made by welding operators who have been tested and certified by the Bureau of Marine Inspection and Navigation; furthermore, that all material used in this boiler conforms to the appropriate sections of Parts 50 and 51, Title 46, Code of Federal Regulations, and the plates were manufactured by _____ _____ and bear the fol-
(Name of manufacturer)
lowing serial numbers and inspector's initials:

Plates subject to tensile stress		Plates not subject to tensile stress	
Serial No.	Inspector's initials	Serial No.	Inspector's initials

Min. T. S. _____ lbs. Min. T. S. _____ lbs.

GENERAL PARTICULARS OF BOILER

Type or name_____
Length and diameter of steam drum_____
Length and diameter of water drum_____
Desired working pressure _____ pounds per square inch.

(Signature)_____.

Subscribed and _____ to before me this
(Sworn or affirmed)
_____ day of _____,
19__

[SEAL] (*Signature*)_____,
Notary Public.

* * * (R.S. 4405, 4417a, 4418, 4426, 4429, 4430, 4433, 4434, as amended, 49 Stat. 1544; 46 U.S.C. 375, 391a, 392, 404, 407, 408, 411, 412, 367)

Section 57.21–2 is amended by deleting Form 935C and inserting a new Form 935C reading as follows:

(Form 935C)

AFFIDAVIT OF MANUFACTURER OF BOILER CONSTRUCTED WITH SEAMLESS SHELL

DEPARTMENT OF COMMERCE,
BUREAU OF MARINE INSPECTION AND NAVIGATION.

State of _____, County of _____
On this _____ day of _____, 19__, I, the undersigned _____, hereby
(Name)
certify that I am _____, of the
(Title)
_____, boiler manufacturer,
(Name of company)
located at _____ who has con-
(City and State)
tracted to furnish a {fire-tube / water-tube} marine boiler to be installed on the steam vessel _____, at _____,
(City and State)
that I am authorized to make this affidavit; that the said boiler is in all respects constructed in accordance with the drawings and specifications approved by the board of supervising inspectors of the Bureau of Marine Inspection and Navigation; in the year _____, and blueprints approved by the United States local inspectors at _____
(City and State)
on _____; that the materials used
(Date)
in the construction of said boiler meet the requirements specified in the various sections of Parts 50 and 51, Title 46, Code of Federal Regulations; also that the drums of such boiler are constructed with seamless shell made in strict accordance with the requirements of §§ 51.11–1 to 51.11–9, Title 46, Code of Federal Regulations, without longitudinal joints, manufactured by _____; that the heads
(Name of manufacturer)
and girth seams are attached by means of the _____ method of fusion weld-
(Metallic-arc)
ing; that all welded joints have been X-rayed; that said films were actually taken from the joints for which they are certified; that the joints are of the (single or double) V-type, and were made by welding operators who have been tested and certified by the Bureau of Marine Inspection and Navigation; further, that all material used in this boiler conforms to the appropriate sections of Part 51, Title 46, Code of Federal Regulations, and the drum shell and heads bear the following serial numbers and inspector's initials:

Plates subject to tensile stress		Plates not subject to tensile stress	
Serial No.	Inspector's initials	Serial No.	Inspector's initials

Min. T. S. _____ lbs. Min. T. S. _____ lbs.

GENERAL PARTICULARS OF BOILER

Type or name_____
Length and diameter of steam drum_____
Length and diameter of water drum_____
Desired working pressure _____ pounds per square inch.

(Signature) _____.

Subscribed and _____ to before me
(Sworn or affirmed)
this _____ day of _____, 19__.

[Seal] (Signature) _____,
Notary Public.

* * * (R.S. 4405, 4417a, 4418, 4426, 4429, 4430, 4433, 4434, as amended, 49 Stat. 1544; 46 U.S.C. 375, 391a, 392, 404, 407, 408, 411, 412, 367)

Section 57.21–2 is amended by deleting Form 935D and inserting a new Form 935D reading as follows:

(Form 935D)

AFFIDAVIT OF BOILER MANUFACTURER COVERING TESTED STEEL OR WROUGHT IRON STAYS

DEPARTMENT OF COMMERCE,
BUREAU OF MARINE INSPECTION AND NAVIGATION.

State of _____, County of _____
On this _____ day of _____, 19__, I, the undersigned _____, hereby
(Name)
certify that I am _____, of the
(Title)
_____, boiler manufacturer
(Name of company)
located at _____, who has
(City and State)
contracted to build a marine boiler to be installed on the steamer _____, at _____; and that the
(City and State)
{wrought-iron / steel} bars used for stays in boilers Nos. __, __, __, __ were tested and inspected

by inspector _____ on the _____
(Name)
day of _____, 19__, and furthermore, I solemnly _____ that all material
(Swear or affirm)
used for stays in this boiler was tested and conforms to all the requirements of §§ 51.5–1 to 5.15–10, inclusive, or §§ 51.6–1 to 51.6–10, inclusive, Title 46, Code of Federal Regulations, and that the working stress to which it will be subjected in service will not exceed the maximum allowable stress provided for such material in §§ 52.8–1 to 52.8–5, inclusive, Title 46, Code of Federal Regulations.
(Signature) _____,
Subscribed and _____ to be-
(Sworn or affirmed)
fore me this _____ day of _____, 19__
[SEAL]
(Signature) _____
Notary Public.

* * * (R.S. 4405, 4417a, 4418, 4426, 4429, 4430, 4433, 4434, as amended, 49 Stat. 1544; 46 U.S.C. 375, 391a, 392, 404, 407, 408, 411, 412, 367)

Section 57.21–2 is amended by deleting Form 935E and inserting a new Form 935E reading as follows:

(Form 935E)

AFFIDAVIT OF MANUFACTURER OF BOILER TUBES

DEPARTMENT OF COMMERCE,
BUREAU OF MARINE INSPECTION AND NAVIGATION.

State of _____, County of _____
On this _____ day of _____, 19__, I, the undersigned, _____, here-
(Name)
by certify that I am the _____
(Title)
of the _____ located at
(Name of company)
_____; that I am authorized
(City and State)
to make this affidavit; and that the {wrought-iron / steel} boiler tubes used in the construction of boilers Nos. __, __, __, __, __, to be installed on steamer _____, at _____, conform to all the re-
(City and State)
quirements of §§ 51.9–1 to 51.9–16, inclusive, or §§ 51.9a–1 to 51.9a–18, inclusive, or §§ 51.10–1 to 51.10–18, inclusive, Title 46, Code of Federal Regulations.
(Signature) _____.
Subscribed and _____ to before me
(Sworn or affirmed)
this _____ day of _____, 19__
_____ day of _____, 19__
(Signature) _____.
Notary Public.

* * * (R.S. 4405, 4417a, 4418, 4426, 4429, 4430, 4433, 4434, as amended, 49 Stat. 1544; 46 U.S.C. 375, 391a, 392, 404, 407, 408, 411, 412, 367)

The first sentence of § 57.21–3 (b) (1) is amended to read as follows:

§ 57.21–3 *Fusible plugs.*

* * * * *

(b) *Requirements.* * * *

(1) *Casings.* The casings of fusible plugs shall be designed as in Figures S–1 and S–2, and shall be made of bronze, in accordance with the requirements of §§ 51.20–1—51.20–10, Grades B or C. * * * (R.S. 4405, 4417a, 4418, 4426, 4429, 4430, 4433, 4434, as amended, 49 Stat. 1544; 46 U.S.C. 375, 391a, 392, 404, 407, 408, 411, 412, 367)

Section 57.21–4 (i) is amended to read as follows:

§ 57.21–4 *Fusion welding repairs.*

* * * * *

(i) Cracks in a staybolted surface may be repaired by welding. * * * (R.S. 4405, 4417a, 4418, 4426, 4429, 4430, 4433, 4434, as amended, 49 Stat. 1544; 46 U.S.C. 375, 391a, 392, 404, 407, 408, 411, 412, 367)

Paragraphs (s), (t), and (u) of § 57.21–4 are amended to read as follows:

(s) When the corroded portion of a staybolted surface exceeds 400 square inches, it shall be permissible to repair the same by cutting out the defective portion and replacing it with a new plate, the edges of the new plate to be welded in position. In such cases, new staybolts shall be fitted in accordance with the requirements of §§ 52.7–1 to 52.7–3 and 52.8–1 to 52.8–5.

(t) Flat-tube sheets in fire-tube boilers which have corroded or where cracks exist in the ligaments, may be repaired by fusion welding.

(u) Unreinforced openings in the shells or drums of boilers or pressure vessels, the diameter of which does not exceed the maximum diameter of an unreinforced opening in accordance with Figures C–1 and C–2, may be closed by the use of a patch or plate inside the drum or shell and sealed against leakage by fusion welding. Such plates shall have a diameter at least 2 inches larger than the diameter of the hole and must have a thickness equal to the thickness of the plate to which it is attached. It shall not be permissible to insert such patches in the shell or head flush with the surrounding plate. * * * (R.S. 4405, 4417a, 4418, 4426, 4429, 4430, 4433, as amended, 49 Stat. 1544; 46 U.S.C. 375, 391a, 392, 404, 407, 408, 411, 367)

Section 57.21–8 (c) is amended to read as follows:

§ 57.21–8 *Bagged or blistered sheets.*

* * * * *

(c) Where the shell plate has blistered, bagged, or bulged to such an extent that there is an appreciable thinning of the plate, it shall be the duty of the local inspectors to have the defective portion cut away and the shell repaired by fitting a patch of steel plate conforming to the requirements of §§ 51.2–1—51.2–10 in place of the defective portion, care being taken that the riveting schedule of the patch is so arranged as to give the plate sufficient strength to withstand the allowable stress placed on it in service. (R.S. 4405, 4417a, 4418, 4426, 4429, 4430, 4433, as amended, 49 Stat. 1544; 46 U.S.C. 375, 391a, 392, 404, 407, 408, 411, 367)

Section 57.21–18 is amended to read as follows:

§ 57.21–18 *Brazed unfired pressure vessels.* (a) Unfired pressure vessels may be constructed with brazed joints provided the temperature to which such vessels are subject in service does not exceed 406° F.

(b) Manufacturers of such vessels will be required to file with the Director an affidavit on Form 935F setting forth that material used and the brazing process will be in conformity with these rules. (R.S. 4405, 4417a, 4418, 4426, 4430, 4433, as amended, 49 Stat. 1544; 46 U.S.C. 375, 391a, 392, 404, 408, 411, 367)

Section 57.21–19 is amended to read as follows:

§ 57.21–19 *Material.* Steel plates used for the shells and heads of brazed unfired pressure vessels shall conform to one of the grades specified in §§ 51.2–1 to 51.2–10, §§ 51.21–1 to 51.21–13, or §§ 51.22–1 to 51.22–11. (R.S. 4405, 4417a, 4418, 4426, 4430, 4433, as amended, 49 Stat. 1544; 46 U.S.C. 375, 391a, 392, 404, 408, 411, 367)

Section 57.21–20 is amended to read as follows:

§ 57.21–20 *Computations.* The maximum allowable working pressure and the thickness of material shall be determined by formulas 1 and 2 of § 52.2–3 (b) using a factor of safety of 5 and a joint efficiency of 0.9 for cylindrical shells, and formulas 11 and 12 of § 52.5–3 (b) including the qualifying paragraphs (b) to (m) inclusive for dished heads. (R.S. 4405, 4417a, 4418, 4426, 4430, 4433, as amended, 49 Stat. 1544; 46 U.S.C. 375, 391a, 392, 404, 408, 411, 367)

Section 57.21–21 is amended to read as follows:

§ 57.21–21 *Detail requirements.* Longitudinal seams may be of the lap-joint type where the shell plate does not exceed ⅜" in thickness. For thicker material the double butt strap joint shall be used. Longitudinal lap joints shall have the edges of the plate lapped a distance of not less than $\frac{S \times T}{6{,}000}$ where S=the minimum of the range of tensile strength, and T=the required thickness of the shell plate. For double butt strap construction, the total amount of lap for inner and outer straps shall be twice that required for single lap, one half of which shall be on each side of the abutting edges. The width of these straps shall not differ more than 25 percent of the width of the wider one. Each strap shall be at least ⅝ the thickness of the shell plate. The laps shall be held closely in position substantially metal to metal by stitch riveting or other efficient means. The brazing shall be done by placing the flux and brazing material on one side of the joint and applying heat until the material comes entirely through the laps and shows uniformly along the seam on the opposite side. Sufficient flux must be used to cause the brazing materials to so appear promptly after reaching the brazing temperature. The brazing materials used shall be such as to produce a joint which has a shearing strength of at least 10,000 lbs. per square inch. (R.S. 4405, 4417a, 4418, 4426, 4430, 4433, as amended, 49 Stat. 1544; 46 U.S.C. 375, 391a, 392, 404, 408, 411, 367)

Section 57.21–22 is amended to read as follows:

§ 57.21–22 *Head and girth joints.* Heads shall be fitted into the shells with a driving fit, and shall be thoroughly brazed in approximately the same manner as the longitudinal seams

for a depth or distance measured from the end of the shell equal to at least ½ of the lap required for a longitudinal lap joint. When a vessel is constructed with more than one course in the shell, the girth joint may be of either the lap or butt type. If of the butt type, the circumference of the abutting courses shall not differ by more than 2/10 of one percent, and either inside or outside sleeves shall be used. In either case the lap over each course shall be not less than ¾ of that required for longitudinal lap joints. (R.S. 4405, 4417a, 4418, 4426, 4430, 4433, as amended, 49 Stat. 1544; 46 U.S.C. 375, 391a, 392, 404, 408, 411, 367)

Section 57.21-26 is amended to read as follows:

§ 57.21-26 *Material.* The material used in the construction of cast-iron heating boilers shall conform to the requirements of §§ 51.18-1—51.18-10 for Grade B or Grade C material. (R.S. 4405, 4417a, 4418, 4426, 4430, 4433, as amended, 49 Stat. 1544; 46 U.S.C. 375, 391a, 392, 404, 408, 411, 367)

PART 58—MARINE ENGINEERING: BOILER PLATE; BOILERS AND ATTACHMENTS

Subpart B—Boilers and Attachments: Installations Made or Contracted for Prior to July 1, 1935

The first undesignated paragraph of § 58.7 is amended to read as follows:

§ 58.7 *Hydrostatic pressure.* The hydrostatic pressure applied to boilers which can be satisfactorily examined internally shall be in the proportion of 125 pounds to the square inch to 100 pounds to the square inch of the steam pressure allowed; types of boilers which due to design cannot be examined internally shall be subjected to a hydrostatic pressure in the proportion of 150 pounds to the square inch to 100 pounds to the square inch of the steam pressure allowed. The inspector, after applying the hydrostatic test, shall thoroughly examine every part of the boiler. The hydrostatic pressure shall also be applied to the main steam pipe up to the throttle. * * * (R.S. 4405, 4417a, 4418, 4426, 4430, 4433, as amended, 49 Stat. 1544; 46 U.S.C. 375, 391a, 392, 404, 408, 411, 367)

Section 58.25 is amended to read as follows:

§ 58.25 *Welding and reinforcing.* No repair work by any welding process other than fusion welding shall be allowed on main boilers or unfired pressure vessels until coupons showing the character of the work proposed to be done by the applicant shall have been tested and submitted, together with an explanation and report of the test, to the local inspectors of the district where the work is to be done. The local inspectors shall then satisfy themselves whether or not such process can be used with safety on the boilers or unfired pressure vessels of steam vessels.

In every case where repairs are to be made by these processes on boilers or unfired pressure vessels of steam vessels subject to the inspection of this Bureau, the engineer in charge and the parties making the repairs are required to notify the office of the local inspectors, giving a full detailed description of the repairs to be made, the location of the vessel, and the time the repairs are to be begun, so that inspection may be had, if practicable, prior to and during the time the work is being done, which reports must be confirmed in writing to the local inspectors.

The application for permission to use these processes on boiler or unfired pressure vessel repairs of any particular vessel implies a guaranty on the part of the applicant that the work shall, in material, flux, and workmanship, be equal to that of the samples furnished.

Repairs to marine boilers and unfired pressure vessels by means of fusion welding may be permitted provided such welding conforms to the requirements of § 57.21-4. (R.S. 4405, 4417a, 4418, 4426, 4429, 4430, 4433, as amended, 49 Stat. 1544; 46 U.S.C. 375, 391a, 392, 404, 407, 408, 411, 367)

Part 58 is amended by the addition of a new § 58.29, which reads as follows:

§ 58.29 *Installations of fuel-oil systems.* Repairs, partial replacements, and tests of systems installed prior to July 1, 1935, shall conform to the following rules:

Ocean and Coastwise

The construction of fuel-oil tanks separate from the hull shall conform to the following requirements: Plating for such tanks shall be not less than five-sixteenths of an inch in thickness; seams where the plates are joined shall be double riveted; all rivet holes shall be fairly drilled, or punched three-fourths diameter and reamed to size; rivet holes shall be spaced not to exceed four diameters; and, where practicable, the tanks shall be caulked inside and out.

Where double bottoms are used for the storage of fuel oil, such double bottoms shall be subdivided with one or more longitudinal watertight bulkheads, except the narrow tanks at the forward and after ends of the vessel. This requirement shall also apply to fuel-oil deep tanks which shall also be fitted with the necessary swash plates. The hatch covers on deep tanks which are used for fuel oil shall be made of steel or iron plating and be fitted oil-tight. Fuel-oil tanks in 'tween-deck spaces overhanging the boiler space or adjoining the ship's sides abreast of the boilers shall be avoided as far as practicable, but where found to be necessary, they shall be subdivided into compartments not exceeding 20 feet in length.

The test for fuel-oil tanks that do not form a part of the structure of the hull shall be a hydrostatic test of 15 pounds to the square inch, and all other tanks shall be tested with a pressure that will not be exceeded in practice.

Deep tanks, peak tanks, settling tanks, and tanks separate from the hull used for the storage of fuel oil shall be fitted with internal gate valves where the suction pipe or pipes penetrate the tank, the valves to be fitted with mechanical appliances so arranged that they may be operated from an accessible place on a deck outside of the machinery space. Double-bottom fuel-oil tanks shall be fitted with a gate valve on the tank top where the suction pipe penetrates it, or, where the suction pipe leads under the tank tops, the valve shall be placed where the pipe enters the machinery space.

No openings are to be cut in the bottoms, ends, or sides of fuel-oil tanks except for suction and heater connections.

The vent pipes from all fuel-oil tanks shall have a net cross-sectional area equal to that of the filling pipes and shall be led from the top of the tank to the open air in a space where no danger will result from the discharge of oil vapor; the discharge ends to be fitted with U-bends and a gauze diaphragm, which can be easily removed for cleaning. Where it is necessary to use bends in the piping, such bends shall not exceed 45° from the vertical. Where vent pipes pass through cargo spaces they shall be protected against damage.

All pipes over 2 inches in diameter shall be attached to fuel-oil tanks by flanges, or flanged fittings, riveted to the tanks. Filling pipes for such tanks shall extend through the top of the tank to deck, and such pipes shall be led to the bottoms of the tanks and fitted with U-bends extending upward at least 12 inches above the bottoms; or in lieu of the U-bends the pipes may be led to within one-half of the diameter of the pipes from the bottoms of the tanks.

Sounding pipes or other reliable apparatus shall be fitted to fuel tanks for use in determining the oil level in each tank. Sounding pipes shall be led up through the deck and down to within one diameter of the bottom of the tank, and shall not be perforated. Such pipes passing through cargo spaces shall be protected against damage. Sounding pipes in the machinery spaces that do not extend up through a deck shall be fitted with a valve or stop cock that will close automatically to prevent oil overflow.

The piping between the service pumps and the stop valve at the burners, when the pressure exceeds 15 pounds per square inch, shall be extra heavy seamless piping and shall be in sight above the floor or platform. The connections on such piping shall be made with extra heavy flanges or extra heavy fittings of forged or cast steel, bronze, or malleable iron. Valves on pipe lines conveying hot oil shall be extra heavy and shall be of the locked-bonnet, bolted-bonnet, or union-nut-bonnet type.

The piping, including connections, shall be tested in place to a hydrostatic test pressure equal to three times the designed maximum working pressure, but in no case less than 150 pounds. All other piping for use in conveying fuel oil, together with valves and fittings, shall be suitable for a pressure of 125 pounds and all such pipe and fittings between the gate valve within the tank and the pumps shall be tested to a hydrostatic pressure of 250 pounds.

When it is desired to change a low-pressure system to a high-pressure system, it will be necessary to apply a

hydrostatic test pressure to the piping and connections from pumps to burners equal to three times the working pressure.

All oil heaters shall be tested to double the working pressure. Continuous pipe or pipes shall be carried through the heads or ends of the heaters, and all joints shall be made on the outside to eliminate the danger of oil being pumped into the boilers in the event of failure of the joints: *Provided, however,* That this requirement does not apply when the water of condensation from the heaters is led to an observation tank or is not used for boiler feed water. Heaters may be installed in double-bottoms, if so desired, when vessels are operating in cold waters and may be placed in the most convenient location for heating the oil.

Fuel-oil pumps supplying oil to the burners, also oil strainers, shall be in duplicate, and the discharge of each pump shall be fitted with an efficient relief valve that will return surplus oil to the suction side of the pumps.

Where fuel-oil tanks are fitted in wooden vessels, lead pans or lining shall be placed under the tanks, the lead to be of a gauge weighing not less than 8 pounds per square foot, this precaution being made to prevent oil from getting into the bilges of the vessel.

Throttle valves on fuel-oil pumps shall be arranged so that they may be operated from some accessible point outside of the pump-room or fireroom enclosure.

Dampers in funnels or uptakes on oil-burning steamers shall be fitted with a locking device in open position.

Suitable drip pans shall be installed to catch the drip from burners, fuel-oil pumps, strainers, or any other place where necessary to prevent oil from reaching the bilges of the vessel.

The boiler room and funnel casings shall be insulated so as to prevent the spread of fire to woodwork or other combustible material adjacent to the casings in the event of an oil fire taking place in the fireroom.

Great Lakes; Bays, Sounds, and Lakes Other Than the Great Lakes; Rivers

For fuel-oil installations on vessels navigating the waters of the Great Lakes; bays, sounds, and lakes other than the Great Lakes; and rivers; the following two paragraphs apply in lieu of the first four undesignated paragraphs following the heading, "Ocean and Coastwise."

The fuel-oil tanks on all inland steamers subject to the rules and regulations of the Bureau of Marine Inspection and Navigation shall be constructed of material of such thickness and workmanship as, in the judgment of the inspector in whose district the installation is made, is safe.

All pipe connections on fuel-oil tanks and cargo-oil tanks, except the connection or connections on the top of such tank, shall be protected by an internal gate valve operated by an extension rod leading to an accessible point in an open space on a deck outside the engine and fire room casing, so that the flow of oil may be immediately shut off in case of the failure or rupture of any of the pipes or connections.

The third and subsequent paragraphs of the rules for fuel-oil installations on vessels navigating the waters of the Great Lakes; bays, sounds, and lakes other than the Great Lakes; and rivers; are identical with the fifth and subsequent paragraphs, respectively, of the rules for fuel-oil installations on vessels navigating the oceans and coastwise, as set forth above in this section. (R.S. 4405, 4417a, 4418, 4426, 4429, 4430, 4433, as amended, 49 Stat. 1544, sec. 2 (a) of 54 Stat. 1028; 46 U.S.C. 375, 391a, 392, 404, 407, 408, 411, 367, 463a)

BOARD OF SUPERVISING INSPECTORS,

[SEAL] R. S. FIELD,
Director, Chairman.

CHARLES M. LYONS,
U. S. Supervising Inspector, 1st District, Boston, Mass.

GEORGE FRIED,
U. S. Supervising Inspector, 2d District, New York, N. Y.

EUGENE CARLSON,
U. S. Supervising Inspector, 3d District, Norfolk, Va.

JOHN F. OETTL,
U. S. Supervising Inspector, 4th District, New Orleans, La.

ROBERT E. COOMBS,
U. S. Supervising Inspector, 5th District, Cincinnati, Ohio.

EARL B. HULL,
U. S. Supervising Inspector, 6th District, Cleveland, Ohio.

WILLIAM FISHER,
U. S. Supervising Inspector, 7th District, San Francisco, Calif.

Approved:

WAYNE C. TAYLOR,
Acting Secretary of Commerce.

[F. R. Doc. 42-2153; Filed, March 12, 1942; 12:08 p. m.]

[Order No. 229]

GENERAL RULES AND REGULATIONS

AMENDMENTS

FEBRUARY 28, 1942.

Pursuant to the authority of R.S. 4405, as amended (46 U.S.C. 375), the Board of Supervising Inspectors, Bureau of Marine Inspection and Navigation, convened in the conference room, No. 1851, Department of Commerce, Washington, D. C., on January 21, 1942, at which session, after public hearings, the following regulations, amendments, and other actions were adopted:

SUBCHAPTER C—MOTORBOATS, AND CERTAIN VESSELS PROPELLED BY MACHINERY OTHER THAN BY STEAM MORE THAN 65 FEET IN LENGTH

PART 28—SPECIFICATIONS AND PROCEDURE FOR APPROVAL OF EQUIPMENT

Section 28.4-8 (d) is amended to read as follows:

§ 28.4-8 *Specifications for kapok buoyant cushion.*

* * * * *

(d) *Cover.* The buoyant material shall be completely protected by a cover of first-grade duck or drill having a weight of not less than 7.2 ounces per square yard, or a leatherette cover consisting of 59-inch, 1.85 drill, thread count 68 x 40; the leatherette cover, including the fabric and coating, to be at least the weight of 14 ounces for a finished width of 54 inches. The cover shall be designed and constructed with as few seams as practicable. (Sec. 6 of 54 Stat. 163-167; 46 U.S.C. 526e)

SUBCHAPTER D—TANK VESSELS

PART 32—REQUIREMENTS FOR HULLS, MACHINERY, AND EQUIPMENT

Section 32.9-4 (j) is amended to read as follows:

§ 32.9-4 *Interior communication systems—T/ALL.*

* * * * *

(j) Telephones installed at external locations exposed to the weather or in locations subject to severe moisture conditions shall be housed in a substantial, watertight metal enclosure. The cover shall be hinged at the bottom or side of the box and, when closed, shall be fastened by a simple substantial mechanism which, when operated, exerts sufficient pressure to make the enclosure watertight. The gasket shall be fastened to, and inserted in, the edge of the box or cover. The magneto generator and switches shall be of watertight construction. The generator and all switches shall be installed inside the enclosure. (R.S. 4405, 4417a, as amended; 46 U.S.C. 375, 391a)

Section 32.9-4 is amended by the addition of a new paragraph (p) reading as follows:

(p) All electrical engine order telegraph systems on vessels, not also equipped with mechanical telegraphs, shall be provided with an alarm, located on the bridge, to indicate visually and audibly the failure of power to the system. (R.S. 4405, 4417a, as amended; 46 U.S.C. 375, 391a)

PART 35—OPERATION

Section 35.2-9 (a) is amended to read as follows:

§ 35.2-9 *Reports of accidents to tank vessels—T/ALL.*[63] (a) The licensed officer in command of any tank ship shall report in writing and in person to the board of local inspectors nearest the port of first arrival any accident to said ship involving loss of life or damage to property to an approximate amount exceeding $500, and shall also report in the same manner any casualty or loss of life from whatever cause of any person on board such vessel, and any stranding or grounding, whether or not any damage has been sustained by the vessel: *Provided,* That when from distance it may be inconvenient to report in person it may be done in writing only, and the report sworn to before any person au-

[63] See also § 1.38 of Subchapter A—Documentation, Entrance, and Clearance of Vessels, etc.

thorized to administer oaths: *Provided further*, That, during the period when a state of war exists between the United States and any foreign nation, communications in regard to casualties shall be handled with caution, and the abovementioned reports shall not be made by radio or by telegram. (R.S. 4405, 4417a, as amended; 46 U.S.C. 375, 391a)

Part 35 is amended by the addition of a new § 35.4-6 reading as follows:

§ 35.4-6 *Explosives—TB/ALL.* Fulminates or other detonating compounds in bulk in dry condition; explosive compositions that ignite spontaneously or undergo marked decomposition when subjected for forty-eight consecutive hours to a temperature of one hundred and sixty-seven degrees Fahrenheit or more; compositions containing an ammonium salt and a chlorate; and other like explosives shall not be accepted, stored, stowed or transported on board tank vessels. (R.S. 4405, 4417a, as amended, 46 U.S.C. 375, 391a)

Section 35.5-5 is amended by the addition of a new paragraph (g) reading as follows:

§ 35.5-5 *Inspection prior to transfer of cargo—TB/ALL.*

* * * * *

(g) All sea valves connected to the cargo piping system are closed. (R.S. 4405, 4417a, as amended; 46 U.S.C. 375, 391a)

PART 37—SPECIFICATIONS FOR LIFE-SAVING APPLIANCES

Section 37.1-1 (c) is amended to read as follows:

§ 37.1-1 *Drawings, specifications, name plates—TB/ALL.*

* * * * *

(c) Builders of lifeboats shall affix a plate or other device to each lifeboat, having thereon the builder's name, number of boat, date of construction of boat, cubical contents of boat, and number of persons said boat will carry, as determined by the rules of the Board of Supervising Inspectors. (R.S. 4405, 4417a, as amended; 46 U.S.C. 375, 391a)

Section 37.1-1 is amended by the addition of a new paragraph (d) reading as follows:

(d) Builders of life rafts shall affix a plate or other device to each life raft, having thereon the builder's name, the manufacturer for whom approved, number of raft, date of construction of raft, cubical contents of raft, and number of persons said raft will carry, as determined by the rules of the Board of Supervising Inspectors. (R.S. 4405, 4417a, as amended; 46 U.S.C. 375, 391a)

Part 37 is amended by the addition of a new § 37.1-6 reading as follows:

§ 37.1-6 *Blocks and falls—TB/ALL.* Blocks and falls installed after May 1, 1942 shall conform to the following requirements:

All blocks, falls, fairleads, padeyes, fastenings, etc., used in connection with lifeboat gear shall be designed with a minimum factor of safety of six, based on the maximum working load.

Where mechanical means for lowering are required, not more than two-part falls shall be used, except in specific cases where three-part falls may be accepted.

Wire rope falls of 6 x 19 regular lay filler wire construction, prelubricated at the factory with suitable neutral wire rope lubricant shall be accepted as standard. Any other type of wire superior or equally as good as the minimum standard specified may be used.

Falls shall be of such length that the lifeboat may be lowered to the water at the lightest seagoing draft with the vessel listed to 15°.

Falls shall be in readiness for use at all times. On vessels over 1,000 gross tons, not fitted with mechanical means for lowering, covered tubs, boxes, or reels shall be provided for the storage of falls, and suitable lowering bitts shall be fitted in easily accessible positions.

Where more than one lifeboat is served by the same set of davits, if the falls are of manilla rope, separate falls shall be provided to serve each lifeboat.

Such blocks as are necessary to allow the falls to load fair in all positions of the davit shall be fitted. Where mechanical means for lowering are provided, there shall be at least 8 feet between the center of the drum and the center of the nearest sheave. Sheaves for wire rope shall have a diameter at the base of the groove at least equal to 12 times the diameter of the rope.

There shall be ample clearance between the cheeks of blocks in which Manila rope is used. The width between the cheeks shall be half an inch greater than the diameter of new ropes when those ropes are 3¾ inches in circumference or greater; blocks for smaller ropes shall be designed with clearance in the same proportion.

Means for lubrication shall be provided for all moving parts of blocks. (R.S. 4405, 4417a, as amended; 46 U.S.C. 375, 391a)

Part 37 is also amended by the addition of a new § 37.1-7 reading as follows:

§ 37.1-7 *Disengaging apparatus—TB/ALL.* Disengaging apparatus fitted in lifeboats after May 1, 1942 shall conform to the following requirements:

All disengaging apparatus, regardless of type, shall be designed with a minimum factor of safety of six, based on the maximum working load.

No type of releasing gear shall be used unless it has first been approved by the Board.

Plans and specifications of all designs of releasing gear shall be submitted to the Board for type approval. The plans shall show dimensions of all parts and complete bill of material used in the construction of the releasing gear.

Simultaneous releasing gears, when installed, shall conform to the following requirements:

(a) They shall be capable of being operated by one person, both ends of the lifeboat disengaging simultaneously.

(b) Means for effecting release of the gear shall be placed in the after end of the lifeboat.

(c) The hooks shall be suitable for instant unhooking of the blocks and falls by hand when the lifeboat is waterborne.

(d) The gear and mechanism for effecting release shall be so arranged and devised as to insure the safety of the lifeboat independent of any "safety pins."

Where simultaneous releasing gears are not provided, the hooks or other means of attaching the lifeboats to the falls shall be arranged so that the device can be manually controlled by one man at each fall in the lifeboat.

Excluding the emergency boats, not more than one type of releasing gear shall be fitted in the lifeboats of a particular vessel.

No part of any releasing gear bearing the weight of the lifeboat shall be constructed of cast iron.

Such parts of the gear as would otherwise have a tendency to set fast by rust or corrosion shall be of corrosive resistant metal.

When considered necessary, a test to destruction may be required to determine the ultimate strength of the releasing gear including hooks.

All disengaging apparatus, regardless of type, shall be prominently marked or stamped to show the safe working load for which the gear has been approved. (R.S. 4405, 4417a, as amended; 46 U.S.C. 375, 391a)

SUBCHAPTER G—OCEAN AND COASTWISE: GENERAL RULES AND REGULATIONS

PART 59—BOATS, RAFTS, BULKHEADS, AND LIFE-SAVING APPLIANCES (OCEAN)

Section 59.6 (b) is amended to read as follows:

§ 59.6 *Lifeboats required on vessels of class* (c).

* * * * *

(b) Towing, fishing, and wrecking vessels, and vessels in special service not carrying passengers or cargo, shall carry sufficient lifeboats to accommodate all persons on board, and the following types of boats may be used in lieu of the standard lifeboats. (R.S. 4405, 4427, 4488, as amended; 46 U.S.C. 375, 405, 481)

Section 59.41 is amended to read as follows:

§ 59.41 *Handling of boats and rafts.* All the boats and rafts shall be stowed in such a way that they can be launched in the shortest possible time and that, even under unfavorable conditions of list and trim from the point of view of the handling of the boats and rafts, it may be possible to embark in them as large a number of persons as possible. The arrangement shall be such that it may be possible to launch on either side of the vessel as large a number of boats and rafts as possible. Where practicable, lifeboat chocks shall be so fitted that the lifeboats they serve shall not require lifting before launching. At least once in each interval of not longer than 3 months, the master of every inspected passenger vessel shall drill and exercise every member of the crew, except fe-

males, in pulling oars in the ship's lifeboats. In addition, the crew of the motor-propelled boats shall demonstrate their ability in the working of the engine and handling of the boat under power. (R.S. 4405, 4417, 4488, as amended; 46 U.S.C. 375, 391, 481)

Section 59.42 (c) is amended to read as follows:

§ 59.42 *Life rafts: drawings, specifications, name plate, and how marked.*

* * * * *

(c) Builders of life rafts shall affix a plate or other device to each life raft, having thereon the builder's name, the manufacturer for whom approved, number of raft, date of construction of raft, cubical contents of raft, and number of persons said raft will carry, as determined by the rules of the Board of Supervising Inspectors. (R.S. 4405, 4426, 4488, 4491, as amended; 49 Stat. 1544; 46 U.S.C. 375, 404, 481, 489, 367)

Section 59.64 is amended to read as follows:

§ 59.64 *Bulkheads on passenger vessels less than 100 gross tons.* (a) Every mechanically propelled vessel carrying passengers for hire shall have not less than three watertight transverse bulkheads properly secured to the hull of the vessel. The arrangement of the bulkheads shall be such that the vessel will remain afloat in the event any one main compartment is flooded. (Effective on and after January 1, 1943.)

(b) A forepeak or collision bulkhead shall be fitted and located not less than 5 percent of the length of the vessel, and not more than 10 feet plus 5 percent of the length of the vessel from the bow, at load water line.

(c) One bulkhead shall be fitted at the forward end of the machinery space (which includes boiler space) and one bulkhead shall be fitted at the aft end of the machinery space. Other transverse bulkheads shall be so located as to meet the above requirements of subdivision and stability.

(d) Main transverse bulkheads may be stepped or recessed. Where a main transverse bulkhead is stepped, subdivision and strength are to be provided in way of the step to maintain the same measure of safety as that secured by the vertical bulkhead. No recess shall be fitted nearer the vessel's side than one-fifth of the vessel's beam amidships measured at right angles to the center line at the level of the load water line on which the subdivision is based. Bulkheads shall extend to a deck whose distance above the load water line is sufficient to enable the subdivision and stability requirements to be met with a fair margin of safety.

(e) If the distance between two adjacent main transverse watertight bulkheads is less than 10 feet plus 2 percent of the vessel's length measured between perpendiculars at the extremities of the vessel's load water line, only one of these bulkheads shall be regarded as forming a boundary of a main compartment.

(f) Existing vessels shall comply with the above rules unless it can be shown by the owners that their application is impracticable and unreasonable. (R.S. 4405, 4426, 4490, as amended; 46 U.S.C. 375, 404, 482)

Part 59 is amended by the addition of a new § 59.64a reading as follows:

§ 59.64a *Bulkheads on passenger vessels 100 gross tons and over.* See Part 144, Subchapter M (Construction or Material Alteration of Passenger Vessels of the United States of 100 Gross Tons and Over Propelled by Machinery). (R.S. 4405, 4426, 4490, as amended; 46 U.S.C. 375, 404, 482)

PART 60—BOATS, RAFTS, BULKHEADS, AND LIFE-SAVING APPLIANCES (COASTWISE)

Section 60.4 (b) is amended to read as follows:

§ 60.4 *Lifeboats required on vessels of class* (c).

* * * * *

(b) Towing, fishing, and wrecking vessels, and vessels in special service not carrying passengers or cargo, shall carry sufficient lifeboats to accommodate all persons on board, and the following types of boats may be used in lieu of the standard lifeboats. (R.S. 4405, 4427, 4488, as amended; 46 U.S.C. 375, 405, 481)

Section 60.23 is amended to read as follows:

§ 60.23 *Handling of boats and rafts.* All the boats and rafts shall be stowed in such a way that they can be launched in the shortest possible time and that, even under unfavorable conditions of list and trim from the point of view of the handling of the boats and rafts, it may be possible to embark in them as large a number of persons as possible. The arrangement shall be such that it may be possible to launch on either side of the vessel as large a number of boats and rafts as possible. Where practicable, lifeboat chocks shall be so fitted that the lifeboats they serve shall not require lifting before launching. At least once in each interval of not longer than 3 months, the master of every inspected passenger vessel shall drill and exercise every member of the crew, except females, in pulling oars in the ship's lifeboats. In addition, the crew of the motor-propelled boats shall demonstrate their ability in the working of the engine and handling of the boat under power. (R.S. 4405, 4417, 4488, as amended; 46 U.S.C. 375, 391, 481)

Section 60.29 (c) is amended to read as follows:

§ 60.29 *Life rafts: drawings, specifications, name plates, and how marked.*

* * * * *

(c) Builders of life rafts shall affix a plate or other device to each life raft, having thereon the builder's name, the manufacturer for whom approved, number of raft, date of construction of raft, cubical contents of raft, and number of persons said raft will carry, as determined by the rules of the Board of Supervising Inspectors. (R.S. 4405, 4426, 4488, 4491, as amended, 49 Stat. 1544; 46 U.S.C. 375, 404, 481, 489, 367)

Section 60.57 is amended to read as follows:

§ 60.57 *Bulkheads on passenger vessels less than 100 gross tons.* (a) Every mechanically propelled vessel carrying passengers for hire shall have not less than three watertight transverse bulkheads properly secured to the hull of the vessel. The arrangement of the bulkheads shall be such that the vessel will remain afloat in the event any one main compartment is flooded. (Effective on and after January 1, 1943.)

(b) A forepeak or collision bulkhead shall be fitted and located not less than 5 percent of the length of the vessel, and not more than 10 feet plus 5 percent of the length of the vessel from the bow, at load water line.

(c) One bulkhead shall be fitted at the forward end of the machinery space (which includes boiler space) and one bulkhead shall be fitted at the aft end of the machinery space. Other transverse bulkheads shall be so located as to meet the above requirements of subdivision and stability.

(d) Main transverse bulkheads may be stepped or recessed. Where a main transverse bulkhead is stepped, subdivision and strength are to be provided in way of the step to maintain the same measure of safety as that secured by the vertical bulkhead. No recess shall be fitted nearer the vessel's side than one-fifth of the vessel's beam amidships measured at right angles to the center line at the level of the load water line on which the subdivision is based. Bulkheads shall extend to a deck whose distance above the load water line is sufficient to enable the subdivision and stability requirements to be met with a fair margin of safety.

(e) If the distance between two adjacent main transverse watertight bulkheads is less than 10 feet plus 2 percent of the vessel's length measured between perpendiculars at the extremities of the vessel's load water line, only one of these bulkheads shall be regarded as forming a boundary of a main compartment.

(f) Existing vessels shall comply with the above rules unless it can be shown by the owners that their application is impracticable and unreasonable.

(g) Mechanically propelled vessels of 100 tons burden or under, engaged in the coastwise bays and harbors of the United States, may be licensed by the U. S. Local Inspectors to carry passengers or excursions on the ocean, not exceeding 15 miles from the mouth of such bays or harbors, without being required to have the three watertight transverse bulkheads provided by Section 4490 (46 U.S.C. 482) of the Revised Statutes for other passenger vessels: *Provided,* That in the judgment of the local inspectors such vessels shall be safe and suitable for such navigation without danger to human life, and that they shall have one watertight collision bulkhead not less than five feet abaft the stem of said vessels. (R.S. 4405, 4426, 4490, as amended, sec. 3 of 24 Stat. 129; 46 U.S.C. 375, 404, 482, 483)

A new section 60.57a is added to read as follows:

§ 60.57a *Bulkheads on passenger vessels 100 gross tons and over.* See Part 144, Subchapter M (Construction or Material Alteration of Passenger Vessels of the United States of 100 Gross Tons and Over Propelled by Machinery). (R.S. 4405, 4426, 4490, as amended, sec. 3 of 24 Stat. 129; 46 U.S.C. 375, 404, 482, 483)

PART 61—FIRE APPARATUS; FIRE PREVENTION

Section 61.3 is amended to read as follows:

§ 61.3 *Glass lamps.* The use of glass lamps shall be prohibited on any vessel under the jurisdiction of the Bureau of Marine Inspection and Navigation unless the same are securely fitted into suitable metal brackets. (R.S. 4405, 4426, 4470, 54 Stat. 1028; 46 U.S.C. 375, 404, 463, 463a)

Section 61.4 is amended to read as follows:

§ 61.4 *Steam and inert gas fire-extinguishing systems*—(a) *General requirements.* (1) All mechanically propelled vessels carrying combustible cargo in the holds, 'tween-decks, or other closed cargo compartments shall be equipped with means for extinguishing fire in such compartments by the use of a steam fire-extinguishing system or by the use of any inert gas fire-extinguishing system approved by the Board of Supervising Inspectors.

(2) Cabinets, boxes, or casings inclosing manifolds or valves shall be distinctly marked in painted letters about 3 inches in height, "Steam Fire Apparatus" or "CO_2 Fire Apparatus", as the case may be.

(3) Steam or gas piping fitted for extinguishing fire shall not be used for any other purpose except that it may be used for fire-detecting purposes.

(4) Pipes for conveying steam from the boilers for the purpose of extinguishing fire shall not be led into the cabins, other passengers' or crew's quarters, or working spaces. Pipes for conveying carbon dioxide or other extinguishing vapors for the purpose of extinguishing fire shall not be led into the cabins or other passengers' or crew's quarters.

(5) Steam smothering lines shall be tested with at least 50 pounds air pressure with ends of the smothering lines capped, or by blowing steam through the lines, and a survey made for detecting corrosion and defects, using the hammer test or such other means as may be necessary.

(6) At annual inspections, all carbon dioxide (CO_2) cylinders, whether fixed or portable, shall be examined externally and replaced if excessive corrosion is found; and all cylinders shall also be checked by weighing to determine contents and if found to be more than 10 percent under required contents of carbon dioxide, the same shall be recharged.

(b) *Steam system on mechanically propelled vessels contracted for prior to July 1, 1935.* (1) The main pipes and their branches, on mechanically propelled vessels carrying passengers or freight, to convey steam from the boilers to the hold and separate compartments of the same shall be not less than 1½ inches in diameter. Steam pipes of not less than three-fourths of an inch in diameter shall be led into all lamp lockers, oil rooms, and like compartments, which lamp lockers, oil rooms, and like compartments, in all classes of vessels, shall be wholly and tightly lined with metal.

(2) All branch pipes leading into the several compartments of the hold of the vessel shall be supplied with valves, the handles distinctly marked to indicate the compartment or parts of the vessel to which they lead. These valves or their handles shall be placed in not more than two places on the most suitable and accessible deck of the vessel and so arranged that all can be enclosed in cabinets, boxes, or casings.

(c) *Steam systems on mechanically propelled vessels contracted for on or after July 1, 1935.* (1) Steam for fire-extinguishing systems shall be available from the main boilers or from a donkey or auxiliary boiler having a minimum capacity equivalent to one square foot of heating surface for each 300 cubic feet of the largest compartment in which cargo is carried. This requirement shall be based upon a rate of evaporation of six pounds of steam per hour per square foot of heating surface from and at 212° F. medium steaming. Equivalent values of heating surface will be permitted for boilers having rates of evaporation differing from that herein specified.

(2) The minimum boiler capacity shall be based upon the volume of the largest compartment in cubic feet, which shall be determined by measurements taken between fire-retarding boundaries such as decks having hatch covers with proper battening down arrangements, shells, tank tops, watertight and fire-retarding bulkheads.

(3) A steam pressure of at least 100 pounds per square inch shall be maintained for fire-extinguishing purposes. Where the maximum allowable boiler working pressure will not permit of this, the maximum steam pressure permitted by the operating boiler pressure limitations shall be provided for this purpose.

(4) The pipe lines shall be led from not more than three stations in easily accessible locations on the weather deck to each cargo hold, cargo 'tween-decks, or other closed cargo compartments, and to each cargo-oil deep tank, lamp locker, oil room, and like compartments, which lamp locker, oil room, and like compartments, in all classes of vessels, shall be wholly and tightly lined with metal. The steam connections to the lamp lockers, oil rooms, and like compartments may be taken from the nearest steam supply line, independent of the extinguishing manifolds.

(5) Each pipe in the extinguishing manifolds shall be fitted with a shut-off valve plainly and permanently marked to indicate into which compartment it discharges. This requirement also applies to independent extinguishing lines.

(6) Manifold steam supply pipes shall be fitted with master valves at the manifolds, and provision shall be made for draining the manifold and individual lines to protect them against freezing. If the manifolds are located on an open deck, they shall be enclosed in a metal box.

(7) The minimum diameter of any steam fire-extinguishing pipe to a cargo hold, cargo 'tween-decks, other closed cargo compartments, or cargo-oil deep tank shall be one inch, the size and number of pipes to be governed by the size of the compartments. The minimum diameter of any steam fire-extinguishing pipe to a lamp locker, oil room, or like compartments, shall be three-fourths of an inch.

(8) The required diameter of pipe to cargo compartments may be determined by the formula:

$$D=\sqrt{\frac{C}{30{,}000}}$$

where
D=required diameter of pipe, in inches.
C=volume of compartment, in cubic feet.
or by the following table:

Volume of compartment	Number of branches to compartment	Size of branches
		Inches
30,000	1	1
46,000	1	1¼
67,000	1	1½
94,000	2	1¼
135,000	2	1½
203,000	3	1½

(9) The diameter of the main supply line to the manifolds shall be computed by the following formula:

$$D=\sqrt{\frac{C}{60{,}000}}$$

where
D=diameter of pipe required, in inches.
C=volume of all compartments, in cubic feet.

(d) *Inert gas systems on mechanically propelled vessels.* (1) When a carbon dioxide (CO_2) smothering system is fitted in the cargo hold, cargo 'tween-decks, or other closed cargo compartments, or cargo-oil deep tanks, the quantity of carbon dioxide shall be sufficient to give a gas saturation of 30 percent of the gross volume of the largest cargo hold. The quantity in pounds of carbon dioxide required may be determined approximately by the following formula:

$$W=\frac{L\times B\times D}{30}$$

where
W=the weight of CO_2 required, in pounds.
L=the length of the hold, in feet.
B=the mean breadth of the hold, in feet.
D=the depth from tank top for flat forming lower boundary to top of uppermost space in which freight may be carried, in feet.

(2) When a carbon dioxide (CO_2) smothering system is fitted in the lamp locker, oil room, or like compartments, the quantity in pounds of carbon dioxide required may be determined by dividing the gross volume of the space by a factor of 22. Lamp lockers, oil rooms, and like compartments, in all classes of vessels, shall be wholly and tightly lined with metal. The whole charge of gas shall be capable of being released simultaneously by operating one

valve and control, and all cylinders shall be completely discharged in not more than two minutes.

(3) Pipes used for supplying carbon dioxide to the cargo holds, cargo 'tween-decks, other closed cargo compartments, and cargo-oil deep tanks shall be not less than three-fourths inch inside diameter. Pipes used for supplying carbon dioxide to lamp lockers, oil rooms, and like compartments shall not be less than one-half inch inside diameter.

(4) The control(s) releasing the inert gas shall be located in a position(s) outside the space(s) protected and shall be readily accessible when the vessel is being navigated. All valves shall be permanently marked to indicate into which compartment they discharge.

(5) Provision shall be made to prevent the admission of air into the lower parts of cargo holds, cargo 'tween-decks, and other closed cargo compartments while the inert gas system is in operation.

(6) Cylinders, piping, and controls for the inert gas system shall be protected from damage and shall be securely fastened and supported. (R.S. 4405, 4426, 49 Stat. 1544, 54 Stat. 1028; 46 U.S.C. 375, 404, 367, 463a)

Section 61.5 is amended to read as follows:

§ 61.5 *Steam fire pumps or their equivalent*—(a) *Fire pumps on steam vessels contracted for prior to July 1, 1935.* (1) Steam vessels required to be provided with double-acting steam fire pumps or other equivalents for throwing water shall be equipped with such pumps according to their tonnage, as follows: Steam vessels over 20 gross tons and not exceeding 150 gross tons shall have not less than 50 cubic inches pump-cylinder capacity. Steam vessels of over 150 gross tons and under 3,000 gross tons shall have not less than one-third of 1 cubic inch pump-cylinder capacity for every gross ton. Steam vessels of 3,000 gross tons and over shall have pump-cylinder capacity of not less than 1,000 cubic inches. This rule shall apply only to pumps installed after June 30, 1907, and all pumps now approved and in use or installed before said date shall be accepted if complying with requirements of law and regulations in force at the time of their installation.

(2) On steam vessels required by paragraph (a) (1) above to have steam fire pumps or their equivalents, the fire mains shall be led from the pumps to all decks, with sufficient number of outlets arranged so that any part of the steam vessel can be reached with water with the full capacity of the pumps and by means of a single 50-foot length of hose from at least one of said outlets. On all classes of steam vessels every such pump shall be fitted with a gauge and a relief valve of such size as to restrict the pressure of water to 100 pounds per square inch.

(b) *Fire pumps on steam vessels contracted for on or after July 1, 1935.* (1) Passenger vessels of 100 gross tons and under shall be equipped with one hand fire pump with a pump-cylinder capacity not less than 100 cubic inches, or a power-driven pump of equivalent discharge capacity.

(2) Vessels exceeding 100 gross tons shall be equipped with fire pumps and fire piping as follows:

(i) All vessels shall be provided with powerful pumps available for use as fire pumps. Passenger vessels of less than 4,000 gross tons shall have 2, and larger passenger vessels at least 3 independently driven pumps connected to the fire main. Cargo vessels and towing vessels of less than 1,000 gross tons shall have 1, and larger cargo or towing vessels at least 2 such pumps so arranged. Each pump shall be capable of delivering two powerful jets of water simultaneously from the highest outlets on the fire main at a Pitot tube pressure of approximately 50 pounds per square inch through nozzles, each having an orifice of not less than ⅞ inch diameter where the internal diameter of the hose exceeds 1½ inches and not less than ⅝ inch in diameter where the internal diameter of the hose does not exceed 1½ inches.

(ii) On oil-burning passenger vessels, where two or more pumps are required, they shall not all be located in the same compartment. Where the engine and firerooms are not entirely separated by steel bulkheads, or if fuel oil can drain from the fireroom bilges into the engine room, one of the fire pumps shall be located in an accessible space in a separate compartment.

(iii) On oil-burning cargo vessels, where two pumps are required, they may be located in the same compartment provided the compartment is equipped with an approved fixed carbon dioxide extinguishing system.

(3) Outlets from the fire mains shall be of a sufficient number and so arranged that any part of the living quarters, weather decks and any part of the cargo decks accessible to crew or passengers, while the vessel is being navigated, may be reached with a single 50-foot length of hose. Outlets within accommodations and service spaces adjacent thereto shall comply with the above or they may be so arranged that any part may be reached with a single 75-foot length of hose provided a siamese connection is fitted at each outlet. Where the fire main is located on an exposed deck, branches shall be provided so that the hose connections necessary to comply with the foregoing be distributed on both sides of the vessel. The fire hose shall be connected to the outlet at all times, except on open decks where the location of the fire hydrants is such that no protection is afforded for the hose in heavy weather. The fire hose may be temporarily removed from the hydrant when it will interfere with the handling of the cargo.

(4) Outlet openings shall have a diameter of not less than 1½ inches, and shall be fitted with suitable hose connections and spanners.

(5) Fire pumps shall be equipped on the discharge side with a relief valve set to relieve at 25 pounds higher than the pressure necessary to maintain the requirements of paragraph (b) (2) (i), above, and a pressure gauge to indicate the pressure on the fire main.

(6) Fire hose shall not be used for any other purpose than fire extinguishing. (R.S. 4405, 4471, as amended, 49 Stat. 1544, 54 Stat. 1028; 46 U.S.C. 375, 464, 367, 463a)

Section 61.15 (g) (2) is deleted. (R.S. 4405, as amended, 49 Stat. 1544, 54 Stat. 1028; 46 U.S.C. 375, 367, 463a)

Section 61.17 is amended to read as follows:

§ 61.17 *Automatic sprinkling system.* (a) The sprinkling system shall, where practicable, consist of pipe fitted with sprinkler heads at suitable distances that will operate automatically in the event of a fire, and spray water on the surrounding area.

(b) The system shall be supplied primarily by a pressure tank or tanks of suitable capacity and maintained at the required pressure, and secondarily by an automatically controlled pump so arranged that when the pressure in the tank falls to a predetermined point the pump will cut in. Where a motor driven sprinkler pump is installed, it shall be capable of being operated from the emergency electrical circuit in case of failure of the main power. Any water standing in the system or the tank should be fresh; and in the event the supply to the pump is salt water, appropriate check valves shall be installed to prevent the salt water entering the tank. Provision should be made to cut in any additional pumping equipment under manual control.

(c) Sprinkler systems shall be zoned, and means shall be provided for giving an alarm where it can be most quickly observed by officers or crew in case of water flow from sprinklers, low air pressure, closed supply valves or operation of thermosensitive elements.

(d) The automatic sprinklers, alarm valves, and other fire-protection devices to be used in the above system shall be of a type approved by the Board of Supervising Inspectors, and the entire system shall be installed in accordance with drawings and specifications approved by the Director.

(e) All tanks installed on or after January 1, 1939, for use in connection with sprinkler systems shall be constructed, tested, and inspected as unfired pressure vessels in accordance with the provisions of Parts 50 to 57, inclusive, of this chapter. All such tanks which were installed prior to January 1, 1939, shall be tested and inspected as unfired pressure vessels in accordance with the provisions of Parts 50 to 57, inclusive, of this chapter. (R.S. 4405, 4471, as amended, 49 Stat. 1544, 54 Stat. 1028; 46 U.S.C. 375, 464, 367, 463a)

Section 61.21 is amended to read as follows:

§ 61.21 *Fire extinguishers for emergency power plants.* In compartments where emergency lighting and wireless units are located, two approved fire extinguishers of either carbon tetrachloride, carbon dioxide, or foam type shall be permanently located at the most accessi-

ble point. In addition, two fire extinguishers of the above types shall be permanently located so as to be readily accessible to the emergency fuel tanks containing gasoline, benzine, or naphtha. (R.S. 4405, 4479, as amended, 54 Stat. 1028; 46 U.S.C. 375, 472, 463a)

Section 61.22 is amended to read as follows:

§ 61.22 *Fire-resisting bulkheads.* On and after July 1, 1931, all passenger vessels shall be fitted above the bulkhead deck with fire-resisting bulkheads which shall be continuous from side to side of the vessel and arranged to the satisfaction of the Bureau of Marine Inspection and Navigation. The mean distance between any two adjacent fire-resisting bulkheads in any superstructure shall, in general, not exceed 131 feet. For additional requirements see Part 144—Construction or Material Alteration of Passenger Vessels of the United States of 100 Gross Tons and Over Propelled by Machinery of Chapter I, Title 46, Code of Federal Regulations. (R.S. 4405, 4470, 49 Stat. 1544, 54 Stat. 1028; 46 U.S.C. 375, 463, 367, 463a)

Section 61.23 (*Fuel oil installation*) is deleted, and § 61.24 (*Construction of Motion picture booths*) is renumbered to be § 61.23, and § 61.25 (*Regulations to guard against and extinguish fire re-established*) is renumbered to be § 61.24. (R.S. 4405, 4418, 4426, as amended, 49 Stat. 1544, 54 Stat. 1028; 46 U.S.C. 375, 392, 404, 367, 463a)

PART 62—LICENSED OFFICERS AND CERTIFICATED MEN

The first undesignated paragraph of § 62.16 is amended to read as follows:

§ 62.16 *Reports of accidents.*[5] The licensed officer in command of any vessel shall report in writing and in person to the board of local inspectors nearest the port of first arrival any accident to said vessel involving loss of life or damage to property to an approximate amount exceeding $500 and shall also report in the same manner any casualty or loss of life from whatever cause of any person on board such vessel and any stranding or grounding, whether or not any damage has been sustained by the vessel: *Provided,* That when from distance it may be inconvenient to report in person it may be done in writing only, and the report sworn to before any person authorized to administer oaths: *Provided further,* That during the period when a state of war exists between the United States and any foreign nation, communications in regard to casualties shall be handled with caution, and the above-mentioned reports shall not be made by radio or by telegram. (R.S. 4405, 4438, as amended; 46 U.S.C. 375, 224) * * *

Section 62.103 (a) is amended to read as follows:

§ 62.103 *Licenses issued.* (a) Licenses to officers on uninspected vessels will be issued as follows:

(1) License as master, motor or sail;
(2) License as mate, motor or sail;
(3) License as chief engineer, motor;
(4) License as assistant engineer, motor.

The licenses will be given appropriate route (ocean or coastwise) and tonnage limitations, commensurate with the experience of the applicants. They will be issued on the usual license forms Nos. 867, 869, 871, 873, and 880, and shall be limited on their face to uninspected vessels. (R.S. 4405, 4438a, as amended; 46 U.S.C. 375, 224a)

PART 63—INSPECTION OF VESSELS

Section 63.10 is amended by the addition of a new undesignated paragraph, as the last paragraph thereof, reading as follows:

§ 63.10 *Emergency lighting system.* * * *

On all passenger vessels contracted for on and after July 1, 1935, or where existing emergency installations operated by internal-combustion engines are replaced, the emergency generator shall be driven by a Diesel or semi-Diesel engine, equipped with means for quick starting. Such emergency equipment shall be located in steel or iron compartments or rooms on the deck above the weather deck and isolated from the passenger and crew quarters. Where existing installations of emergency engines and generators are located in wooden compartments or rooms, such compartments or rooms shall be made fire-resistant by lining same with asbestos board having a thickness of not less than one-quarter inch over which iron or steel sheathing shall be fitted. (R.S. 4405, 4417, 4426, as amended, 49 Stat. 1544, 54 Stat. 1028; 46 U.S.C. 375, 391, 404, 367, 463a)

Section 63.11 (c) (4) is amended to read as follows:

§ 63.11 *Specifications covering types of voice tubes and telephones.*

* * * * *

(c) *Telephone systems.* * * *

(4) Telephones installed at external locations exposed to the weather or in locations subject to severe moisture conditions shall be housed in a substantial, watertight metal enclosure. The cover shall be hinged at the bottom or side of the box, and when closed, shall be fastened by a simple substantial mechanism which, when operated, exerts sufficient pressure to make the enclosure watertight. The gasket shall be fastened to, and inserted in, the edge of the box or cover. The magneto generator and switches shall be of watertight construction. The generator and all switches shall be installed inside of the enclosure. (R.S. 4405, 4417, 4426, as amended, 49 Stat. 1544, 54 Stat. 1028; 46 U.S.C. 375, 391, 404, 367, 463a)

Section 63.11 is amended by the addition of a new paragraph (f) reading as follows:

(f) All electrical engine order telegraph systems shall be provided with an alarm, located on the bridge, to indicate visually and audibly the failure of power to the system. (R.S. 4405, 4417, 4418, 4426, as amended, 49 Stat 1544; 46 U.S.C. 375, 391, 392, 404, 367)

SUBCHAPTER H—GREAT LAKES: GENERAL RULES AND REGULATIONS

PART 76—BOATS, RAFTS, BULKHEADS AND LIFE-SAVING APPLIANCES

Section 76.32 (c) is amended to read as follows:

§ 76.32 *Life rafts: drawings, specifications, name plate, and how marked.*

* * * * *

(c) Builders of life rafts shall affix a plate or other device to each life raft, having thereon the builder's name, the manufacturer for whom approved, number of raft, date of construction of raft, cubical contents of raft, and number of persons said raft will carry, as determined by the rules of the Board of Supervising Inspectors. (R.S. 4405, 4426, 4488, 4491, as amended; 46 U.S.C. 375, 404, 481, 489)

Section 76.49 is amended to read as follows:

§ 76.49 *Handling of the boats and rafts.* All the boats and rafts shall be stowed in such a way that they can be launched in the shortest possible time and that, even under unfavorable conditions of list and trim from the point of view of the handling of the boats and rafts, it may be possible to embark in them as large a number of persons as possible. The arrangements shall be such that it may be possible to launch on either side of the vessel as large a number of boats and rafts as possible. Where practicable, lifeboat chocks shall be so fitted that the lifeboats they serve shall not require lifting before launching. At least once in each interval of not longer than 3 months, the master of every inspected passenger vessel shall drill and exercise every member of the crew, except females, in pulling oars in the ship's lifeboats. In addition, the crew of the motor-propelled boats shall demonstrate their ability in the working of the engine and handling of the boat under power. (R.S. 4405, 4417, 4488, as amended; 46 U.S.C. 375, 391, 481)

PART 77—FIRE APPARATUS; FIRE PREVENTION

Section 77.3 is amended to read as follows:

§ 77.3 *Glass lamps.* The use of glass lamps shall be prohibited on any vessel under the jurisdiction of the Bureau of Marine Inspection and Navigation unless the same are securely fitted into suitable metal brackets. (R.S. 4405, 4426, 4470, 54 Stat. 1028; 46 U.S.C. 375, 404, 463, 463a)

Section 77.4 is amended to read as follows:

§ 77.4 *Steam and inert gas fire-extinguishing systems*—(a) *General requirements.* (1) All mechanically propelled vessels carrying combustible cargo in the holds, 'tween-decks, or other closed cargo compartments shall be equipped with means for extinguishing fire in such compartments by the use of a steam fire-extinguishing system or by the use of any

[5] See also § 1.38 of Subchapter A—Documentation, Entrance, and Clearance of Vessels, etc.

inert gas fire-extinguishing system approved by the Board of Supervising Inspectors.

(2) Cabinets, boxes, or casings inclosing manifolds or valves shall be distinctly marked in painted letters about 3 inches in height, "Steam Fire Apparatus" or "CO_2 Fire Apparatus", as the case may be.

(3) Steam or gas piping fitted for extinguishing fire shall not be used for any other purpose except that it may be used for fire-detecting purposes.

(4) Pipes for conveying steam from the boilers for the purpose of extinguishing fire shall not be led into the cabins, other passengers' or crew's quarters, or working spaces. Pipes for conveying carbon dioxide or other extinguishing vapors for the purpose of extinguishing fire shall not be led into the cabins or other passengers' or crew's quarters.

(5) Steam smothering lines shall be tested with at least 50 pounds air pressure with ends of the smothering lines capped, or by blowing steam through the lines, and a survey made for detecting corrosion and defects, using the hammer test or such other means as may be necessary.

(6) At annual inspections, all carbon dioxide (CO_2) cylinders, whether fixed or portable, shall be examined externally and replaced if excessive corrosion is found; and all cylinders shall also be checked by weighing to determine contents and if found to be more than 10 percent under required contents of carbon dioxide, the same shall be recharged.

(b) *Steam systems on mechanically propelled vessels contracted for prior to July 1, 1935.* (1) The main pipes and their branches, on mechanically propelled vessels carrying passengers or freight, to convey steam from the boilers to the hold and separate compartments of the same shall be not less than 1½ inches in diameter. Steam pipes of not less than three-fourths of an inch in diameter shall be led to all lamp lockers, oil rooms, and like compartments, which lamp lockers, oil rooms, and like compartments, in all classes of vessels, shall be wholly and tightly lined with metal.

(2) All branch pipes leading into the several compartments of the hold of the vessel shall be supplied with valves, the handles distinctly marked to indicate the compartment or parts of the vessel to which they lead. These valves or their handles shall be placed in not more than two places on the most suitable and accessible deck of the vessel and so arranged that all can be inclosed in cabinets, boxes, or casings.

(c) *Steam systems on mechanically propelled vessels contracted for on or after July 1, 1935.* (1) Steam for fire-extinguishing systems shall be available from the main boilers or from a donkey or auxiliary boiler having a minimum capacity equivalent to one square foot of heating surface for each 300 cubic feet of the largest compartment in which cargo is carried. This requirement shall be based upon a rate of evaporation of six pounds of steam per hour per square foot of heating surface from and at 212° F. medium steaming. Equivalent values of heating surface will be permitted for boilers having rates of evaporation differing from that herein specified.

(2) The minimum boiler capacity shall be based upon the volume of the largest compartment in cubic feet, which shall be determined by measurements taken between fire-retarding boundaries such as decks having hatch covers with proper battening down arrangements, shells, tank tops, water-tight and fire-retarding bulkheads.

(3) A steam pressure of at least 100 pounds per square inch shall be maintained for fire-extinguishing purposes. Where the maximum allowable boiler working pressure will not permit of this, the maximum steam pressure permitted by the operating boiler pressure limitations shall be provided for this purpose.

(4) The pipe lines shall be led from not more than three stations in easily accessible locations on the weather deck to each cargo hold, cargo 'tween-decks, or other closed cargo compartments, and to each cargo-oil deep tank, lamp locker, oil room, and like compartments, which lamp locker, oil room, and like compartments, in all classes of vessels, shall be wholly and tightly lined with metal. The steam connections to the lamp lockers, oil rooms, and like compartments may be taken from the nearest steam supply line, independent of the extinguishing manifolds.

(5) Each pipe in the extinguishing manifolds shall be fitted with a shut-off valve plainly and permanently marked to indicate into which compartment it discharges. This requirement also applies to independent extinguishing lines.

(6) Manifold steam supply pipes shall be fitted with master valves at the manifolds, and provision shall be made for draining the manifold and individual lines to protect them against freezing. If the manifolds are located on an open deck, they shall be inclosed in a metal box.

(7) The minimum diameter of any steam fire-extinguishing pipe to a cargo hold, cargo 'tween-decks, other closed cargo compartments, or cargo-oil deep tank shall be one inch, the size and number of pipes to be governed by the size of the compartment. The minimum diameter of any steam fire-extinguishing pipe to a lamp locker, oil room, or like compartments, shall be three-fourths of an inch.

(8) The required diameter of pipe to cargo compartments may be determined by the formula:

$$D=\sqrt{\frac{C}{30,000}}$$

Where
D=required diameter of pipe, in inches.
C=volume of compartment, in cubic feet.
or by the following table:

Volume of compartment	Number of branches to compartment	Size of branches
		Inches
30,000	1	1
46,000	1	1¼
67,000	1	1½
94,000	2	1¼
135,000	2	1½
203,000	3	1½

(9) The diameter of the main supply line to the manifolds shall be computed by the following formula:

$$D=\sqrt{\frac{C}{60,000}}$$

where
D=diameter of pipe required, in inches.
C=volume of all compartments, in cubic feet.

(d) *Inert gas systems on mechanically propelled vessels.* (1) When a carbon dioxide (CO_2) smothering system is fitted in the cargo hold, cargo 'Tween-decks, or other closed cargo compartments, or cargo-oil deep tanks, the quantity of carbon dioxide shall be sufficient to give a gas saturation of 30 percent of the gross volume of the largest cargo hold. The quantity in pounds of carbon dioxide required may be determined approximately by the following formula:

$$W=\frac{L\times B\times D}{30}$$

where
W=the weight of CO_2 required, in pounds.
L=the length of the hold, in feet.
B=the mean breadth of the hold, in feet.
D=the depth from tank top or flat forming lower boundary to top of uppermost space in which freight may be carried, in feet.

(2) When a carbon dioxide (CO_2) smothering system is fitted in the lamp locker, oil rooms, or like compartments, the quantity in pounds of carbon dioxide required may be determined by dividing the gross volume of the space by a factor of 22. Lamp lockers, oil rooms, and like compartments, in all classes vessels, shall be wholly and tightly lined with metal. The whole charge of gas shall be capable of being released simultaneously by operating one valve and control, and all cylinders shall be completely discharged in not more than two minutes.

(3) Pipes used for supplying carbon dioxide to the cargo holds, cargo 'tween-decks, other closed cargo compartments, and cargo-oil deep tanks shall be not less than three-fourths inch inside diameter. Pipes used for supplying carbon dioxide to lamp lockers, oil rooms, and like compartments shall not be less than one-half inch inside diameter.

(4) The control(s) releasing the inert gas shall be located in a position(s) outside the space(s) protected and shall be readily accessible when the vessel is being navigated. All valves shall be permanently marked to indicate into which compartment they discharge.

(5) Provision shall be made to prevent the admission of air into the lower parts of cargo holds, cargo 'tween-decks, and

other closed cargo compartments while the inert gas system is in operation.

(6) Cylinders, piping, and controls for the inert gas system shall be protected from damage and shall be securely fastened and supported. (R.S. 4405, 4426, 54 Stat. 1028; 46 U.S.C. 375, 404, 463a)

Section 77.5 is amended to read as follows:

§ 77.5 *Steam fire pumps or their equivalent*—(a) *Fire pumps on steam vessels contracted for prior to July 1, 1935.* (1) Steam vessels required to be provided with double-acting steam fire pumps or other equivalents for throwing water shall be equipped with such pumps according to their tonnage, as follows: Steam vessels over 20 gross tons and not exceeding 150 gross tons shall have not less than 50 cubic inches pump-cylinder capacity. Steam vessels of over 150 gross tons and under 3,000 gross tons shall have not less than one-third of 1 cubic inch pump-cylinder capacity for every gross ton. Steam vessels of 3,000 gross tons and over shall have pump-cylinder capacity of not less than 1,000 cubic inches. This rule shall apply only to pumps installed after June 30, 1907, and all pumps now approved and in use or installed before said date shall be accepted if complying with requirements of law and regulations in force at the time of their installation.

(2) On steam vessels required by paragraph (1) above to have steam fire pumps or their equivalents, the fire mains shall be led from the pumps to all decks, with sufficient number of outlets arranged so that any part of the steam vessel can be reached with water with the full capacity of the pumps and by means of a single 50-foot length of hose from at least one of said outlets. On all classes of steam vessels every such pump shall be fitted with a gauge and a relief valve of such size as to restrict the pressure of water to 100 pounds per square inch.

(b) *Fire pumps on steam vessels contracted for on or after July 1, 1935.* (1) Passenger vessels of 100 gross tons and under shall be equipped with one hand fire pump with a pump-cylinder capacity not less than 100 cubic inches, or a power-driven pump of equivalent discharge capacity.

(2) Vessels exceeding 100 gross tons shall be equipped with fire pumps and fire piping as follows:

(i) All vessels shall be provided with powerful pumps available for use as fire pumps. Passenger vessels of less than 4,000 gross tons shall have 2, and larger passenger vessels at least 3 independently driven pumps connected to the fire main. Cargo vessels and towing vessels of less than 1,000 gross tons shall have 1, and larger cargo or towing vessels at least 2 such pumps so arranged. Each pump shall be capable of delivering two powerful jets of water simultaneously from the highest outlets on the fire main at a Pitot tube pressure of approximately 50 pounds per square inch through nozzles, each having an orifice of not less than ⅞ inch diameter where the internal diameter of the hose exceeds 1½ inches and not less than ⅝ inch in diameter where the internal diameter of the hose does not exceed 1½ inches.

(ii) On oil-burning passenger vessels, where two or more pumps are required, they shall not all be located in the same compartment. Where the engine and firerooms are not entirely separated by steel bulkheads, or if fuel oil can drain from the fireroom bilges into the engine room, one of the fire pumps shall be located in an accessible space in a separate compartment.

(iii) On oil-burning cargo vessels, where the two pumps are required, they may be located in the same compartment provided the compartment is equipped with an approved fixed carbon dioxide extinguishing system.

(3) Outlets from the fire mains shall be of a sufficient number and so arranged that any part of the living quarters, weather decks and any parts of cargo decks accessible to crew or passengers, while the vessel is being navigated, may be reached with a single 50-foot length of hose. Outlets within accommodations and service spaces adjacent thereto shall comply with the above or they may be so arranged that any part may be reached with a single 75-foot length of hose provided a siamese connection is fitted at each outlet. Where the fire main is located on an exposed deck, branches shall be provided so that the hose connections necessary to comply with the foregoing be distributed on both sides of the vessel. The fire hose shall be connected to the outlet at all times, except on open decks where the location of the fire hydrants is such that no protection is afforded for the hose in heavy weather. The fire hose may be temporarily removed from the hydrant when it will interfere with the handling of the cargo.

(4) Outlet openings shall have a diameter of not less than 1½ inches, and shall be fitted with suitable hose connections and spanners.

(5) Fire pumps shall be equipped on the discharge side with a relief valve set to relieve at 25 pounds higher than the pressure necessary to maintain the requirements of paragraph (b) (2) (i) above, and a pressure gauge to indicate the pressure on the fire main.

(6) Fire hose shall not be used for any other purpose than fire extinguishing.

Section 77.17 is amended to read as follows:

§ 77.17 *Automatic sprinkler system.* (a) The sprinkler system shall, where practicable, consist of pipes fitted with sprinkler heads at suitable distances that will operate automatically in the event of a fire, and spray water on the surrounding area.

(b) The system shall be supplied primarily by a pressure tank or tanks of suitable capacity and maintained at the required pressure, and secondarily by an automatically controlled pump so arranged that when the pressure in the tank falls to a predetermined point the pump will cut in. Where a motor driven sprinkler pump is installed, it shall be capable of being operated from the emergency electrical circuit in case of failure of the main power. Any water standing in the system or the tank should be fresh; and in the event the supply to the pump is salt water, appropriate check valves shall be installed to prevent the salt water entering the tank. Provision should be made to cut in any additional pumping equipment under manual control.

(c) Sprinkler systems shall be zoned, and means shall be provided for giving an alarm where it can be most quickly observed by officers or crew in case of water flow from sprinklers, low air pressure, closed supply valves or operation of thermosensitive elements.

(d) The automatic sprinklers, alarm valves, and other fire-protection devices to be used in the above system shall be of a type approved by the Board of Supervising Inspectors, and the entire system shall be installed in accordance with drawings and specifications approved by the Director.

(e) All tanks installed on or after January 1, 1939, for use in connection with sprinkler systems shall be constructed, tested and inspected as unfired pressure vessels in accordance with the provisions of Parts 50 to 57, inclusive, of this chapter. All such tanks which were installed prior to January 1, 1939, shall be tested and inspected as unfired pressure vessels in accordance with the provisions of Parts 50 to 57, inclusive, of this chapter. (R.S. 4405, 4471, as amended, 54 Stat. 1028; 46 U.S.C. 375, 464, 463a)

Section 77.21 is amended to read as follows:

§ 77.21 *Fire extinguishing equipment for emergency power plants.* In compartments where emergency lighting and wireless units are located, two approved fire extinguishers of either carbon tetrachloride, carbon dioxide, or foam type shall be permanently located at the most accessible points. In addition, two fire extinguishers of the above types shall be permanently located so as to be readily accessible to the emergency fuel tanks containing gasoline, benzine, or naphtha. (R.S. 4405, 4479, 54 Stat. 1028; 46 U.S.C. 375, 472, 463a)

Section 77.22 (*Fuel-oil tanks*) is deleted, and § 77.23 (*Construction of motion picture booths*) is renumbered to be § 77.22, and § 77.24 (*Regulations to guard against and extinguish fire re-established*), is renumbered to be § 77.23. (R.S. 4405, 4418, 4426, as amended, 54 Stat. 1028; 46 U.S.C. 375, 392, 404, 463a)

PART 78—LICENSED OFFICERS AND CERTIFICATED MEN

The first undesignated paragraph of § 78.16 is amended to read as follows:

§ 78.16 *Reports of accidents to vessels.*[5] The licensed officer in command of any vessel shall report in writing and in person to the board of local inspectors nearest the port of first arrival any accident to said vessel involving loss of life or damage to property to an approximate amount exceeding $500, and shall also report in the same manner any casualty

[5] See also § 1.38 of Subchapter A—Documentation, Entrance, and Clearance of Vessels, etc.

or loss of life from whatever cause of any person on board such vessel and any stranding or grounding, whether or not any damage has been sustained by the vessel: *Provided,* That when from distance it may be inconvenient to report in person it may be done in writing only, and the report sworn to before any person authorized to administer oaths: *Provided further,* That during the period when a state of war exists between the United States and any foreign nation, communications in regard to casualties shall be handled with caution, and the above-mentioned reports shall not be made by radio or by telegram. (R.S. 4405, 4438, as amended; 46 U.S.C. 375, 224)

PART 79—INSPECTION OF VESSELS

Section 79.11 is amended to read as follows:

§ 79.11 *Emergency lighting system* (a) All vessels engaged in the passenger service, which are electrically lighted by dynamos or other electric units, located below the deep-load line of the vessel, shall have on board an emergency electric lighting system located above the deep-load line to light the vessel sufficiently to enable the passengers and crew to find their way to the exits in the event of failure of the main lighting system. The emergency lighting system shall at all times be ready for immediate use, and shall be installed and arranged so that all emergency lights may be switched on from the pilot house, navigation bridge, or a central station.

(b) On all passenger vessels contracted for on and after July 1, 1935, or where existing emergency installations operated by internal combustion engines are replaced, the emergency generator shall be driven by a Diesel or semi-Diesel engine, equipped with means for quick starting. Such emergency equipment shall be located in steel or iron compartments or rooms on the deck above the weather deck and isolated from the passenger and crew quarters. Where existing installations of emergency engines and generators are located in wooden compartments or rooms, such compartments or rooms shall be made fire-resistant by lining same with asbestos board having a thickness of not less than one-quarter inch over which iron or steel sheathing shall be fitted. (R.S. 4405, 4417, 4426, 4484, 4488, 54 Stat. 1028; 46 U.S.C. 375, 391, 404, 477, 481, 463a)

Section 79.12 (c) (4) is amended to read as follows:

§ 79.12 *Specifications covering types of voice tubes and telephones.*

* * * * *

(c) *Telephone systems.* * * *

(4) Telephones installed at external locations exposed to the weather or in locations subject to severe moisture conditions shall be housed in a substantial, watertight metal enclosure. The cover shall be hinged at the bottom or side of the box and, when closed, shall be fastened by a simple substantial mechanism which, when operated, exerts sufficient pressure to make the enclosure watertight. The gasket shall be fastened to, and inserted in, the edge of the box or cover. The magneto generator and switches shall be of watertight construction. The generator and all switches shall be installed inside the enclosure. (R.S. 4405, 4417, 4426, 54 Stat. 1028; 46 U.S.C. 375, 391, 404, 463a)

Section 79.12 is amended by the addition of a new paragraph (f) reading as follows:

(f) All electrical engine order telegraph systems shall be provided with an alarm, located on the bridge, to indicate visually and audibly the failure of power to the system. (R.S. 4405, 4417, 4418, 4426, 54 Stat. 1028; 46 U.S.C. 375, 391, 392, 404, 463a)

SUBCHAPTER I—BAYS, SOUNDS, AND LAKES OTHER THAN THE GREAT LAKES; GENERAL RULES AND REGULATIONS

PART 94—BOATS, RAFTS, BULKHEADS, AND LIFE-SAVING APPLIANCES

Section 94.26 is amended to read as follows:

§ 94.26 *Handling of the boats and rafts.* All the boats and rafts shall be stowed in such a way that they can be launched in the shortest possible time and that, even under unfavorable conditions of list and trim from the point of view of the handling of the boats and rafts, it may be possible to embark in them as large a number of persons as possible. The arrangement shall be such that it may be possible to launch on either side of the vessel as large a number of boats and rafts as possible. Where practicable, lifeboat chocks shall be so fitted that the lifeboats they serve shall not require lifting before launching. At least once in each interval of not longer than 3 months, the master of every inspected passenger vessel shall drill and exercise every member of the crew, except females, in pulling oars in the ship's lifeboats. In addition, the crew of the motor-propelled boats shall demonstrate their ability in the working of the engine and handling of the boat under power. (R.S. 4405, 4417, 4488 as amended; 46 U.S.C. 375, 391, 481)

Section 94.32 (c) is amended to read as follows:

§ 94.32 *Life rafts: drawings, specifications, name plate; marking method.*

* * * * *

(c) Builders of life rafts shall affix a plate or other device to each life raft, having thereon the builder's name, the manufacturer for whom approved, number of raft, date of construction of raft, cubical contents of raft, and number of persons said raft will carry, as determined by the rules of the Board of Supervising Inspectors. (R.S. 4405, 4426, 4488, 4491, as amended; 46 U.S.C. 375, 404, 481, 489)

PART 95—FIRE APPARATUS; FIRE PREVENTION

Section 95.3 is amended to read as follows:

§ 95.3 *Glass lamps.* The use of glass lamps shall be prohibited on any vessel under the jurisdiction of the Bureau of Marine Inspection and Navigation unless the same are securely fitted into suitable metal brackets. (R.S. 4405, 4426, 4470, 54 Stat. 1028; 46 U.S.C. 375, 404, 463, 463a)

Section 95.4 is amended to read as follows:

§ 95.4 *Steam and inert gas fire-extinguishing systems*—(a) *General requirements.* (1) All mechanically propelled vessels carrying combustible cargo in the holds, 'tween-decks, or other closed cargo compartments shall be equipped with means for extinguishing fire in such compartments by the use of a steam fire-extinguishing system or by the use of any inert gas fire-extinguishing system approved by the Board of Supervising Inspectors.

(2) Cabinets, boxes, or casings inclosing manifolds or valves shall be distinctly marked in painted letters about 3 inches in height, "Steam Fire Apparatus" or "CO_2 Fire Apparatus", as the case may be.

(3) Steam or gas piping fitted for extinguishing fire shall not be used for any other purpose except that it may be used for fire-detecting purposes.

(4) Pipes for conveying steam from the boilers for the purpose of extinguishing fire shall not be led into the cabins, other passengers' or crew's quarters, or working spaces. Pipes for conveying carbon dioxide or other extinguishing vapors for the purpose of extinguishing fire shall not be led into the cabins or other passengers' or crew's quarters.

(5) Steam smothering lines shall be tested with at least 50 pounds air pressure with ends of the smothering lines capped, or by blowing steam through the lines, and a survey made for detecting corrosion and defects, using the hammer test or such other means as may be necessary.

(6) At annual inspections, all carbon dioxide (CO_2) cylinders, whether fixed or portable, shall be examined externally and replaced if excessive corrosion is found; and all cylinders shall also be checked by weighing to determine contents and if found to be more than 10 percent under required contents of carbon dioxide, the same shall be recharged.

(b) *Steam systems on mechanically propelled vessels contracted for prior to July 1, 1935.* (1) The main pipes and their branches, on mechanically propelled vessels carrying passengers or freight, to convey steam from the boilers to the hold and separate compartments of the same shall be not less than 1½ inches in diameter. Steam pipes of not less than three-fourths of an inch in diameter shall be led into all lamp lockers, oil rooms, and like compartments, which lamp lockers, oil rooms, and like compartments, in all classes of vessels, shall be wholly and tightly lined with metal.

(2) All branch pipes leading into the several compartments of the hold of the vessel shall be supplied with valves, the handles distinctly marked to indicate the compartment or parts of the vessel to which they lead. These valves or their handles shall be placed in not more than two places on the most suitable and ac-

cessible deck of the vessel and so arranged that all can be enclosed in cabinets, boxes, or casings.

(c) *Steam systems on mechanically propelled vessels contracted for on or after July 1, 1935.* (1) Steam for fire-extinguishing systems shall be available from the main boilers or from a donkey or auxiliary boiler having a minimum capacity equivalent to one square foot of heating surface for each 300 cubic feet of the largest compartment in which cargo is carried. This requirement shall be based upon a rate of evaporation of six pounds of steam per hour per square foot of heating surface from and at 212° F. medium steaming. Equivalent values of heating surface will be permitted for boilers having rates of evaporation differing from that herein specified.

(2) The minimum boiler capacity shall be based upon the volume of the largest compartment in cubic feet, which shall be determined by measurements taken between fire-retarding boundaries such as decks having hatch covers with proper battening down arrangements, shells, tank tops, watertight and fire-retarding bulkheads.

(3) A steam pressure of at least 100 pounds per square inch shall be maintained for fire-extinguishing purposes. Where the maximum allowable boiler working pressure will not permit of this, the maximum steam pressure permitted by the operating boiler pressure limitations shall be provided for this purpose.

(4) The pipe lines shall be led from not more than three stations in easily accessible locations on the weather deck to each cargo hold, cargo 'tween-decks, or other closed cargo compartments, and to each cargo-oil deep tank, lamp locker, oil room, and like compartments, which lamp locker, oil room, and like compartments, in all classes of vessels, shall be wholly and tightly lined with metal. The steam connections to the lamp lockers, oil rooms, and like compartments may be taken from the nearest steam supply line, independent of the extinguishing manifolds.

(5) Each pipe in the extinguishing manifolds shall be fitted with a shut-off valve plainly and permanently marked to indicate into which compartment it discharges. This requirement also applies to independent extinguishing lines.

(6) Manifold steam supply pipes shall be fitted with master valves at the manifolds, and provision shall be made for draining the manifold and individual lines to protect them against freezing. If the manifolds are located on an open deck, they shall be enclosed in a metal box.

(7) The minimum diameter of any steam fire-extinguishing pipe to a cargo hold, cargo 'tween-decks, other closed cargo compartments, or cargo-oil deep tank shall be one inch, the size and number of pipes to be governed by the size of the compartments. The minimum diameter of any steam fire-extinguishing pipe to a lamp locker, oil room, or like compartments, shall be three-fourths of an inch.

(8) The required diameter of the pipe to cargo compartments may be determined by the formula:

$$D=\sqrt{\frac{C}{30,000}}$$

where
D=required diameter of pipe, in inches.
C=volume of compartment, in cubic feet.
or by the following table:

Volume of compartment	Number of branches to compartment	Size of branches
		Inches
30,000	1	1
46,000	1	1¼
67,000	1	1½
94,000	2	1¼
135,000	2	1½
203,000	3	1½

(9) The diameter of the main supply line to the manifolds shall be computed by the following formula:

$$D=\sqrt{\frac{C}{60,000}}$$

where
D=diameter of pipe required, in inches.
C=volume of all compartments, in cubic feet.

(d) *Inert gas systems on mechanically propelled vessels.* (1) When a carbon dioxide (CO_2) smothering system is fitted in the cargo hold, cargo 'tween-decks, or other closed cargo compartments, or cargo-oil deep tanks, the quantity of carbon-dioxide shall be sufficient to give a gas saturation of 30 percent of the gross volume of the largest cargo hold. The quantity in pounds of carbon dioxide required may be determined approximately by the following formula:

$$W=\frac{L\times B\times D}{30}$$

where
W=the weight of CO_2 required, in pounds.
L=the length of the hold, in feet.
B=the mean breadth of the hold, in feet.
D=the depth from tank top for flat forming lower boundary to top of uppermost space in which freight may be carried, in feet.

(2) When a carbon dioxide (CO_2) smothering system is fitted in the lamp locker, oil room, or like compartments, the quantity in pounds of carbon dioxide required may be determined by dividing the gross volume of the space by a factor of 22. Lamp lockers, oil rooms, and like compartments, in all classes of vessels, shall be wholly and tightly lined with metal. The whole charge of gas shall be capable of being released simultaneously by operating one valve and control, and all cylinders shall be completely discharged in not more than two minutes.

(3) Pipes used for supplying carbon dioxide to the cargo holds, cargo 'tween-decks, other closed cargo compartments, and cargo-oil deep tanks shall be not less than three-fourths inch inside diameter. Pipes used for supplying carbon dioxide to lamp lockers, oil rooms, and like compartments shall not be less than one-half inch inside diameter.

(4) The control(s) releasing the inert gas shall be located in a position(s) outside the space(s) protected and shall be readily accessible when the vessel is being navigated. All valves shall be permanently marked to indicate into which compartment they discharge.

(5) Provision shall be made to prevent the admission of air into the lower parts of cargo holds, cargo 'tween-decks, and other closed cargo compartments while the inert gas system is in operation.

(6) Cylinders, piping, and controls for the inert gas system shall be protected from damage and shall be securely fastened and supported. (R.S. 4405, 4426, 54 Stat. 1028; 46 U.S.C. 375, 404, 463a)

Section 95.5 is amended to read as follows:

§ 95.5 *Steam fire pumps or their equivalent*—(a) *Fire pumps on steam vessels contracted for prior to July 1, 1935.* (1) Steam vessels required to be provided with double-acting steam fire pumps or other equivalents for throwing water shall be equipped with such pumps according to their tonnage, as follows: Steam vessels over 20 gross tons and not exceeding 150 gross tons shall have not less than 50 cubic inches pump-cylinder capacity. Steam vessels of over 150 gross tons and under 3,000 gross tons shall have not less than one-third of 1 cubic inch pump-cylinder capacity for every gross ton. Steam vessels of 3,000 gross tons and over shall have pump-cylinder capacity of not less than 1,000 cubic inches. This rule shall apply only to pumps installed after June 30, 1907, and all pumps now approved and in use or installed before said date shall be accepted if complying with requirements of law and regulations in force at the time of their installation.

(2) On steam vessels required by paragraph (a) (1) above to have steam fire pumps or their equivalents, the fire mains shall be led from the pumps to all decks, with sufficient number of outlets arranged so that any part of the steam vessel can be reached with water with the full capacity of the pumps and by means of a single 50-foot length of hose from at least one of said outlets. On all classes of steam vessels every such pump shall be fitted with a gauge and a relief valve of such size as to restrict the pressure of water to 100 pounds per square inch.

(b) *Fire pumps on steam vessels contracted for on or after July 1, 1935.* (1) Passenger vessels of 100 gross tons and under shall be equipped with one hand fire pump with a pump-cylinder capacity not less than 100 cubic inches, or a power-driven pump of equivalent discharge capacity.

(2) Vessels exceeding 100 gross tons shall be equipped with fire pumps and fire piping as follows:

(i) All vessels shall be provided with powerful pumps available for use as fire pumps. Passenger vessels of less than 4,000 gross tons shall have 2, and larger passenger vessels at least 3 independently driven pumps connected to the fire main. Cargo vessels and towing vessels of less than 1,000 gross tons shall have 1, and larger cargo or towing vessels at least 2 such pumps so arranged. Each pump shall be capable of delivering two power-

ful jets of water simultaneously from the highest outlets on the fire main at a Pitot tube pressure of approximately 50 pounds per square inch through nozzles, each having an orifice of not less than ⅞ inch diameter where the internal diameter of the hose exceeds 1½ inches and not less than ⅝ inch in diameter where the internal diameter of the hose does not exceed 1½ inches.

(ii) On oil-burning passenger vessels, where two or more pumps are required, they shall not all be located in the same compartment. Where the engine and firerooms are not entirely separated by steel bulkheads, or if fuel oil can drain from the fireroom bilges into the engine room, one of the fire pumps shall be located in an accessible space in a separate compartment.

(iii) On oil-burning cargo vessels, where two pumps are required, they may be located in the same compartment provided the compartment is equipped with an approved fixed carbon dioxide extinguishing system.

(3) Outlets from the fire mains shall be of a sufficient number and so arranged that any part of the living quarters, weather decks and any part of the cargo decks accessible to crew or passengers, while the vessel is being navigated, may be reached with a single 50 foot length of hose. Outlets within accommodations and service spaces adjacent thereto shall comply with the above or they may be so arranged that any part may be reached with a single 75-foot length of hose provided a siamese connection is fitted at each outlet. Where the fire main is located on an exposed deck, branches shall be provided so that the hose connections necessary to comply with the foregoing be distributed on both sides of the vessel. The fire hose shall be connected to the outlet at all times, except on open decks where the location of the fire hydrants is such that no protection is afforded for the hose in heavy weather. The fire hose may be temporarily removed from the hydrant when it will interfere with the handling of the cargo.

(4) Outlet openings shall have a diameter of not less than 1½ inches, and shall be fitted with suitable hose connections and spanners.

(5) Fire pumps shall be equipped on the discharge side with a relief valve set to relieve at 25 pounds higher than the pressure necessary to maintain the requirements of paragraph (b) (2) (i), above, and a pressure gauge to indicate the pressure on the fire main.

(6) Fire hose shall not be used for any other purpose than fire extinguishing. (R.S. 4405, 4471, as amended, 54 Stat. 1028; 46 U.S.C. 375, 464, 463a)

Section 95.16 is amended to read as follows:

§ 95.16 *Automatic sprinkling system.* (a) The sprinkling system shall, where practicable, consist of pipes fitted with sprinkler heads at suitable distances that will operate automatically in the event of a fire, and spray water on the surrounding area.

(b) The system shall be supplied primarily by a pressure tank or tanks of suitable capacity and maintained at the required pressure, and secondarily by an automatically controlled pump so arranged that when the pressure in the tank falls to a predetermined point the pump will cut in. Where a motor driven sprinkler pump is installed, it shall be capable of being operated from the emergency electrical circuit in case of failure of the main power. Any water standing in the system or the tank should be fresh; and in the event the supply to the pump is salt water, appropriate check valves shall be installed to prevent the salt water entering the tank. Provision should be made to cut in any additional pumping equipment under manual control.

(c) Sprinkler systems shall be zoned; and means shall be provided for giving an alarm where it can be most quickly observed by officers or crew in case of water flow from sprinklers, low air pressure, closed supply valves or operation of thermosensitive elements.

(d) The automatic sprinklers, alarm valves, and other fire-protection devices to be used in the above system shall be of a type approved by the Board of Supervising Inspectors, and the entire system shall be installed in accordance with drawings and specifications approved by the Director.

(e) All tanks installed on or after January 1, 1939, for use in connection with sprinkler systems shall be constructed, tested, and inspected as unfired pressure vessels in accordance with the provisions of Parts 50 to 57, inclusive, of this chapter. All such tanks which were installed prior to January 1, 1939, shall be tested and inspected as unfired pressure vessels in accordance with the provisions of Parts 50 to 57, inclusive, of this chapter. (R.S. 4405, 4471, as amended, 54 Stat. 1028; 46 U.S.C. 375, 464, 463a)

Section 95.21 is amended to read as follows:

§ 95.21 *Fire extinguishers for emergency power plants.* In compartments where emergency lighting and wireless units are located, two approved fire extinguishers of either carbon tetrachloride, carbon dioxide, or foam type shall be permanently located at the most accessible point. In addition, two fire extinguishers of the above types shall be permanently located so as to be readily accessible to the emergency fuel tanks containing gasoline, benzine, or naptha. (R.S. 4405, 4479, as amended, 54 Stat. 1028; 46 U.S.C. 375, 472, 463a)

Section 95.22 (*Fuel oil tanks*) is deleted, and § 95.23 (*Construction of motion picture booths*) is renumbered to be § 95.22, and § 95.24 (*Regulations to guard against and extinguish fire reestablished*) is renumbered to be § 95.23. (R.S. 4405, 4418, 4426, as amended, 54 Stat. 1028; 46 U.S.C. 375, 392, 404, 463a)

PART 96—LICENSED OFFICERS AND CERTIFICATED MEN

The first undesignated paragraph of § 96.16 is amended to read as follows:

§ 96.16 *Reports of accidents.*[5] The licensed officer in command of any vessel shall report in writing and in person to the board of local inspectors nearest the port of first arrival any accident to said vessel involving loss of life or damage to property to an approximate amount exceeding $500, and shall also report in the same manner any casualty or loss of life from whatever cause of any person on board such vessel and any stranding or grounding, whether or not any damage has been sustained by the vessel: *Provided,* That when from distance it may be inconvenient to report in person it may be done in writing only, and the report sworn to before any person authorized to administer oaths: *Provided further,* That during the period when a state of war exists between the United States and any foreign nation, communications in regard to casualties shall be handled with caution, and the above-mentioned reports shall not be made by radio or by telegram. * * * (R.S. 4405, 4438, as amended; 46 U.S.C. 375, 224)

PART 97—INSPECTION OF VESSELS

Section 97.14 (c) (4) is amended to read as follows:

§ 97.14 *Specifications covering types of voice tubes and telephones.*

* * * * *

(c) *Telephone systems.* * * *

(4) Telephones installed at external locations exposed to the weather or in locations subject to severe moisture conditions shall be housed in a substantial, watertight metal enclosure. The cover shall be hinged at the bottom or side of the box, and when closed, shall be fastened by a simple substantial mechanism which, when operated, exerts sufficient pressure to make the enclosure watertight. The gasket shall be fastened to, and inserted in, the edge of the box or cover. The magneto generator and switches shall be of watertight construction. The generator and all switches shall be installed inside of the enclosure. (R.S. 4405, 4417, 4426, as amended, 54 Stat. 1028; 46 U.S.C. 375, 391, 404, 463a)

Section 97.14 is amended by the addition of a new paragraph (f) reading as follows:

(f) All electrical engine order telegraph systems shall be provided with an alarm, located on the bridge, to indicate visually and audibly the failure of power to the system. (R.S. 4405, 4417, 4418, 4426, as amended; 46 U.S.C. 375, 391, 392, 404)

Section 97.16 is amended to read as follows:

§ 97.16 *Emergency lighting system.* (a) All vessels engaged in the passenger service, which are electrically lighted by dynamos or other electric units, located below the deep-load line of the vessel, shall have on board an emergency electric lighting system located above the deep-

[5] See also § 1.38 of Subchapter A—Documentation, Entrance, and Clearance of Vessels, etc.

load line to light the vessel sufficiently to enable the passengers and crew to find their way to the exits in the event of failure of the main lighting system. The emergency lighting system shall at all times be ready for immediate use, and shall be installed and arranged so that all emergency lights may be switched on from the pilot house, navigation bridge, or a central station.

(b) On all passenger vessels contracted for on and after July 1, 1935, or where existing emergency installations operated by internal combustion engines are replaced, the emergency generator shall be driven by a Diesel or semi-Diesel engine, equipped with means for quick starting. Such emergency equipment shall be located in steel or iron compartments or rooms on the deck above the weather deck and isolated from the passenger and crew quarters. Where existing installations of emergency engines and generators are located in wooden compartments or rooms, such compartments or rooms shall be made fire-resistant by lining same with asbestos board having a thickness of not less than one-quarter inch over which iron or steel sheathing shall be fitted. (R.S. 4405, 4417, 4426, 4484, 4488, 54 Stat. 1028; 46 U.S.C. 375, 391, 404, 477, 481, 463a)

SUBCHAPTER J—RIVERS: GENERAL RULES AND REGULATIONS

PART 113—BOATS, RAFTS, BULKHEADS, AND LIFE-SAVING APPLIANCES

Section 113.28 is amended by changing the third undesignated paragraph thereof to read as follows:

§ 113.28 *Handling of the boats and rafts.* * * *

Where practicable, lifeboat chocks shall be so fitted that the lifeboats they serve shall not require lifting before launching. (R.S. 4405, 4417, 4481, 4488, as amended; 46 U.S.C. 375, 391, 474, 481)

Section 113.29 (c) is amended to read as follows:

§ 113.29 *Life rafts: drawings, specifications, name plate; marking method.*

* * * * *

(c) Builders of life rafts shall affix a plate or other device to each life raft, having thereon the builder's name, the manufacturer for whom approved, number of raft, date of construction of raft, cubical contents of raft, and number of persons said raft will carry, as determined by the rules of the Board of Supervising Inspectors. (R.S. 4405, 4426, 4488, 4491, as amended; 46 U.S.C. 375, 404, 481, 489)

PART 114—FIRE APPARATUS: FIRE PREVENTION

Section 114.3 is amended to read as follows:

§ 114.4 *Glass lamps.* The use of glass lamps shall be prohibited on any vessel under the jurisdiction of the Bureau of Marine Inspection and Navigation unless the same are securely fitted into suitable metal brackets. (R.S. 4405, 4426, 4470, 54 Stat. 1028; 46 U.S.C. 375, 404, 463, 463a)

Section 114.6 is amended to read as follows:

§ 114.6 *Steam and inert gas fire-extinguishing systems*—(a) *General requirements.* (1) All mechanically propelled vessels carrying combustible cargo in the holds, 'tween-decks, or other closed cargo compartments shall be equipped with means for extinguishing fire in such compartments by the use of a steam fire-extinguishing system or by the use of any inert gas fire-extinguishing system approved by the Board of Supervising Inspectors.

(2) Cabinets, boxes, or casings inclosing manifolds or valves shall be distinctly marked in painted letters, about 3 inches in height, "Steam Fire Apparatus" or "CO_2 Fire Apparatus", as the case may be.

(3) Steam or gas piping fitted for extinguishing fire shall not be used for any other purpose except that it may be used for fire-detecting purposes.

(4) Pipes for conveying steam from the boilers for the purpose of extinguishing fire shall not be led into the cabins, other passengers' or crew's quarters, or working spaces. Pipes for conveying carbon dioxide or other extinguishing vapors for the purpose of extinguishing fire shall not be led into the cabins or other passengers' or crew's quarters.

(5) Steam smothering lines shall be tested with at least 50 pounds air pressure with ends of the smothering lines capped, or by blowing steam through the lines, and a survey made for detecting corrosion and defects, using the hammer test or such other means as may be necessary.

(6) At annual inspections, all carbon dioxide (CO_2) cylinders, whether fixed or portable, shall be examined externally and replaced if excessive corrosion is found; and all cylinders shall also be checked by weighing to determine contents and if found to be more than 10 per cent under required contents of carbon dioxide, the same shall be recharged.

(b) *Steam systems on mechanically propelled vessels contracted for prior to July 1, 1935.* (1) The main pipes and their branches, on mechanically propelled vessels carrying passengers or freight, to convey steam from the boilers to the hold and separate compartments of the same shall be not less than 1½ inches in diameter, except on steam vessels employed on western rivers, constructed prior to June 30, 1905, which steam vessels may use branch pipes not less than three-fourths of an inch in diameter. Steam pipes of not less than three-fourths of an inch in diameter shall be led to all lamp lockers, oil rooms, and like compartments, which lamp lockers, oil rooms, and like compartments, in all classes of vessels, shall be wholly and tightly lined with metal.

(2) All branch pipes leading into the several compartments of the hold of the vessel shall be supplied with valves, the handles distinctly marked to indicate the compartment or parts of the vessel to which they lead. These valves or their handles shall be placed in not more than two places on the most suitable and accessible deck of the vessel and so arranged that all can be inclosed in cabinets, boxes, or casings.

(c) *Steam systems on mechanically propelled vessels contracted for on or after July 1, 1935.* (1) Steam for fire-extinguishing systems shall be available from the main boilers or from a donkey or auxiliary boiler having a minimum capacity equivalent to one square foot of heating surface for each 300 cubic feet of the largest compartment in which cargo is carried. This requirement shall be based upon a rate of evaporation of six pounds of steam per hour per square foot of heating surface from and at 212° F. medium steaming.* Equivalent values of heating surface will be permitted for boilers having rates of evaporation differing from that herein specified.

(2) The minimum boiler capacity shall be based upon the volume of the largest compartment in cubic feet, which shall be determined by measurements taken between fire-retarding boundaries such as decks having hatch covers with proper battening down arrangements, shells, tank tops, water-tight and fire-retarding bulkheads.

(3) A steam pressure of at least 100 pounds per square inch shall be maintained for fire-extinguishing purposes. Where the maximum allowable boiler working pressure will not permit of this, the maximum steam pressure permitted by the operating boiler pressure limitations shall be provided for this purpose.

(4) The pipe lines shall be led from not more than three stations in easily accessible locations on the weather deck to each cargo hold, cargo 'tween-decks, or other closed cargo compartments, and to each cargo-oil deep tank, lamp locker, oil room, and like compartments, which lamp locker, oil room, and like compartments, in all classes of vessels, shall be wholly and tightly lined with metal. The steam connections to the lamp lockers, oil rooms, and like compartments may be taken from the nearest steam supply line, independent of the extinguishing manifolds.

(5) Each pipe in the extinguishing manifolds shall be fitted with a shut-off valve plainly and permanently marked to indicate into which compartment it discharges. This requirement also applies to independent extinguishing lines.

(6) Manifold steam supply pipes shall be fitted with master valves at the manifolds, and provision shall be made for draining the manifold and individual lines to protect them against freezing. If the manifolds are located on an open deck, they shall be inclosed in a metal box.

(7) The minimum diameter of any steam fire-extinguishing pipe to a cargo hold, cargo 'tween-decks, other closed cargo compartments, or cargo-oil deep tank shall be one inch, the size and number of pipes to be governed by the size of the compartment. The minimum diameter of any steam fire-extinguishing pipe to a lamp locker, oil room, or like compartments, shall be three-fourths of an inch.

(8) The required diameter of pipe to cargo compartments may be determined by the formula:

$$D=\sqrt{\frac{C}{30,000}}$$

where
D=required diameter of pipe, in inches.
C=volume of compartment, in cubic feet.
or by the following table:

Volume of compartment	Number of branches to compartment	Size of branches
		Inches
30,000	1	1
46,000	1	1¼
67,000	1	1½
94,000	2	1¼
135,000	2	1½
203,000	3	1½

(9) The diameter of the main supply line to the manifolds shall be computed by the following formula:

$$D=\sqrt{\frac{C}{60,000}}$$

where
D=diameter of pipe required, in inches.
C=volume of all compartments, in cubic feet.

(d) *Inert gas systems, on mechanically propelled vessels.* (1) When a carbon dioxide (CO_2) smothering system is fitted in the cargo hold, cargo 'tween-decks, or other closed cargo compartments, or cargo-oil deep tanks, the quantity of carbon dioxide shall be sufficient to give a gas saturation of 30 percent of the gross volume of the largest cargo hold. The quantity in pounds of carbon dioxide required may be determined approximately by the following formula:

$$W=\frac{L\times B\times D}{30}$$

Where
W=the weight of CO_2 required, in pounds.
L=the length of the hold, in feet.
B=the mean breadth of the hold, in feet.
D=the depth from tank top or flat forming lower boundary to top of uppermost space in which freight may be carried, in feet.

(2) When a carbon dioxide (CO_2) smothering system is fitted in the lamp locker, oil room, or like compartments, the quantity in pounds of carbon dioxide required may be determined by dividing the gross volume of the space by a factor of 22. Lamp lockers, oil rooms, and like compartments, in all classes of vessels, shall be wholly and tightly lined with metal. The whole charge of gas shall be capable of being released simultaneously by operating one valve and control, and all cylinders shall be completely discharged in not more than two minutes.

(3) Pipes used for supplying carbon dioxide to the cargo holds, cargo 'tween-decks, other closed cargo compartments, and cargo-oil deep tanks shall be not less than three-fourths inch inside diameter. Pipes used for supplying carbon dioxide to lamp lockers, oil rooms, and like compartments shall be not less than one-half inch inside diameter.

(4) The control(s) releasing the inert gas shall be located in a position(s) outside the space(s) protected and shall be readily accessible when the vessel is being navigated. All valves shall be permanently marked to indicate into which compartment they discharge.

(5) Provision shall be made to prevent the admission of air into the lower parts of cargo holds, cargo 'tween-decks, and other closed cargo compartments while the inert gas system is in operation.

(6) Cylinders, piping, and controls for the inert gas system shall be protected from damage and shall be securely fastened and supported. (R.S. 4405, as amended, 54 Stat. 1028; 46 U.S.C. 375, 463a)

Section 114.7 is amended to read as follows:

§ 114.7 *Steam fire pumps or their equivalent*—(a) *Fire pumps on steam vessels contracted for prior to July 1, 1935.* (1) Steam vessels required to be provided with double-acting steam fire pumps or other equivalents for throwing water shall be equipped with such pumps according to their tonnage, as follows: Steam vessels over 20 gross tons and not exceeding 150 gross tons shall have not less than 30 cubic inches pump-cylinder capacity. Steam vessels of over 150 gross tons and under 3,000 gross tons shall have not less than one-third of 1 cubic inch pump-cylinder capacity for every gross ton. Steam vessels of 3,000 gross tons and over shall have pump-cylinder capacity of not less than 1,000 cubic inches. This rule shall apply only to pumps installed after June 30, 1907, and all pumps now approved and in use or installed before said date shall be accepted if complying with requirements of law and regulations in force at the time of their installation.

(2) On steam vessels required by paragraph (a) (1) above to have steam fire pumps or their equivalents, the fire mains shall be led from the pumps to all decks, with sufficient number of outlets arranged so that any part of the steam vessel can be reached with water with the full capacity of the pumps and by means of a single 50-foot length of hose from at least one of said outlets. On all classes of steam vessels every such pump shall be fitted with a gauge and a relief valve of such size as to restrict the pressure of water to 100 pounds per square inch.

(b) *Fire pumps on steam vesesls contracted for on or after July 1, 1935.* (1) Passenger vessels of 100 gross tons and under shall be equipped with one hand fire pump with a pump-cylinder capacity not less than 100 cubic inches, or a power-driven pump of equivalent discharge capacity.

(2) Vessels exceeding 100 gross tons shall be equipped with fire pumps and fire piping as follows:

(i) All vessels shall be provided with powerful pumps available for use as fire pumps. Passenger vessels of less than 4,000 gross tons shall have 2, and larger passenger vessels at least 3 independently driven pumps connected to the fire main. Cargo vessels and towing vessels of less than 1,000 gross tons shall have 1, and larger cargo or towing vessels at least 2 such pumps so arranged. Each pump shall be capable of delivering two powerful jets of water simultaneously from the highest outlets on the fire main at a Pitot tube pressure of approximately 50 pounds per square inch through nozzles, each having an orifice of not less than ⅞ inch diameter where the internal diameter of the hose exceeds 1½ inches and not less than ⅝ inch in diameter where the internal diameter of the hose does not exceed 1½ inches.

(ii) On oil-burning passenger vessels, where two or more pumps are required, they shall not all be located in the same compartment. Where the engine and firerooms are not entirely separated by steel bulkheads, or if fuel oil can drain from the fireroom bilges into the engine room, one of the fire pumps shall be located in an accessible space in a separate compartment.

(iii) On oil-burning cargo vessels, where two pumps are required, they may be located in the same compartment provided the compartment is equipped with an approved fixed carbon dioxide extinguishing system.

(3) Outlets from the fire mains shall be of a sufficient number and so arranged that any part of the living quarters, weather decks and any part of the cargo decks accessible to crew or passengers, while the vessel is being navigated, may be reached with a single 50-foot length of hose. Outlets within accommodations and service spaces adjacent thereto shall comply with the above or they may be so arranged that any part may be reached with a single 75-foot length of hose provided a siamese connection is fitted at each outlet. Where the fire main is located on an exposed deck, branches shall be provided so that the hose connections necessary to comply with the foregoing be distributed on both sides of the vessel. The fire hose shall be connected to the outlet at all times, except on open decks where the location of the fire hydrants is such that no protection is afforded for the hose in heavy weather. The fire hose may be temporarily removed from the hydrant when it will interfere with the handling of the cargo.

(4) Outlet openings shall have a diameter of not less than 1½ inches, and shall be fitted with suitable hose connections and spanners.

(5) Fire pumps shall be equipped on the discharge side with a relief valve set to relieve at 25 pounds higher than the pressure necessary to maintain the requirements of paragraph (b) (2) (i), above, and a pressure gauge to indicate the pressure on the fire main.

(6) Fire hose shall not be used for any other purpose than fire extinguishing. (R.S. 4405, 4471, as amended, 54 Stat. 1028; 46 U.S.C. 375, 464, 463a)

Section 114.17 is amended to read as follows:

§ 114.17 *Automatic sprinkling system.* (a) The sprinkling system shall, where practicable, consist of pipes fitted with sprinkler heads at suitable distances that will operate automatically in the event of a fire, and spray water on the surrounding area.

(b) The system shall be supplied primarily by a pressure tank or tanks of suitable capacity and maintained at the

required pressure, and secondarily by an automatically controlled pump so arranged that when the pressure in the tank falls to a predetermined point the pump will cut in. Where a motor driven sprinkler pump is installed, it shall be capable of being operated from the emergency electrical circuit in case of failure of the main power. Any water standing in the system or the tank should be fresh; and in the event the supply to the pump is salt water, appropriate check valves shall be installed to prevent the salt water entering the tank. Provision should be made to cut in any additional pumping equipment under manual control.

(c) Sprinkler systems shall be zoned, and means shall be provided for giving an alarm where it can be most quickly observed by officers or crew in case of water flow from sprinklers, low air pressure, closed supply valves or operation of thermosensitive elements.

(d) The automatic sprinkler, alarm valves, and other fire-protection devices to be used in the above system shall be of a type approved by the Board of Supervising Inspectors, and the entire system shall be installed in accordance with drawings and specifications approved by the Director.

(e) All tanks installed on or after January 1, 1939, for use in connection with sprinkler systems shall be constructed, tested, and inspected as unfired pressure vessels in accordance with the provisions of Parts 50 to 57, inclusive, of this chapter. All such tanks which were installed prior to January 1, 1939, shall be tested and inspected as unfired pressure vessels in accordance with the provisions of Parts 50 to 57, inclusive, of this chapter. (R.S. 4405, 4471, as amended, 54 Stat. 1028; 46 U.S.C. 375, 464, 463a)

Section 114.22 is amended to read as follows:

§ 114.22 *Fire extinguishers for emergency power plants.* In compartments where emergency lighting and wireless units are located, two approved fire extinguishers of either carbon tetrachloride, carbon dioxide, or foam type shall be permanently located at the most accessible point. In addition, two fire extinguishers of the above types shall be permanently located so as to be readily accessible to the emergency fuel tanks containing gasoline, benzine, or naphtha. (R.S. 4405, 4479, as amended, 54 Stat. 1028; 46 U.S.C. 375, 472, 463a)

Section 114.23 (*Fuel oil tanks*) is deleted, and § 114.24 (*Construction of motion picture booths*) is renumbered to be § 114.23, and § 114.25 (*Regulations to guard against and extinguish fire reestablished*) is renumbered to be § 114.24. (R.S. 4405, 4418, 4426, as amended, 54 Stat. 1028; 46 U.S.C. 375, 392, 404, 463a)

PART 115—LICENSED OFFICERS

The first undesignated paragraph of § 115.16 is amended to read as follows:

§ 115.16 *Reports of accidents.* The licensed officer in command of any vessel shall report in writing and in person to the board of local inspectors nearest the port of first arrival any accident to said vessel involving loss of life or damage to property to an approximate amount exceeding $500 and shall also report in the same manner any casualty or loss of life from whatever cause of any person on board such vessel and any stranding or grounding, whether or not any damage has been sustained by the vessel: *Provided,* That when from distance it may be inconvenient to report in person it may be done in writing only, and the report sworn to before any person authorized to administer oaths: *Provided further,* That during the period when a state of war exists between the United States and any foreign nation, communications in regard to casualties shall be handled with caution, and the above-mentioned reports shall not be made by radio or by telegram. * * * (R.S. 4405, 4438, as amended; 46 U.S.C. 375, 224)

PART 116—INSPECTION OF VESSELS

Section 116.9 is amended to read as follows:

§ 116.9 *Emergency lighting system.* (a) All vessels engaged in the passenger service, which are electrically lighted by dynamos or other electric units, located below the deep-load line of the vessel, shall have on board an emergency electric lighting system located above the deep-load line to light the vessel sufficiently to enable the passengers and crew to find their way to the exits in the event of failure of the main lighting system. The emergency lighting system shall at all times be ready for immediate use, and shall be installed and arranged so that all emergency lights may be switched on from the pilot house, navigation bridge, or a central station.

(b) On all passenger vessels contracted for on and after July 1, 1935, or where existing emergency installations operated by internal combustion engines are replaced, the emergency generator shall be driven by a Diesel or semi-Diesel engine, equipped with means for quick starting. Such emergency equipment shall be located in steel or iron compartments or rooms on the deck above the weather deck and isolated from the passenger and crew quarters. Where existing installations of emergency engines and generators are located in wooden compartments or rooms, such compartments or rooms shall be made fire-resistant by lining same with asbestos board having a thickness of not less than one-quarter inch over which iron or steel sheathing shall be fitted. (R.S. 4405, 4417, 4426, 4484, 4488, 54 Stat. 1028; 46 U.S.C. 375, 391, 404, 477, 481, 463a)

Section 116.10 (c) (4) is amended to read as follows:

§ 116.10 *Specifications covering types of voice tubes and telephones.*

* * * * *

(c) *Telephone systems.* * * *

(4) Telephones installed at external locations exposed to the weather or in locations subject to severe moisture conditions shall be housed in a substantial, watertight metal enclosure. The cover shall be hinged at the bottom or side of the box, and when closed, shall be fastened by a simple substantial mechanism which, when operated, exerts sufficient pressure to make the enclosure watertight. The gasket shall be fastened to, and inserted in, the edge of the box or cover. The magneto generator and switches shall be of watertight construction. The generator and all switches shall be installed inside of the enclosure. (R.S. 4405, 4417, 4426, as amended, 54 Stat. 1028; 46 U.S.C. 375, 391, 404, 463a)

Section 116.10 is amended by the addition of a new paragraph (f) reading as follows:

(f) All electrical engine order telegraph systems shall be provided with an alarm, located on the bridge, to indicate visually and audibly the failure of power to the system. (R.S. 4405, 4417, 4418, 4426, as amended; 46 U.S.C. 375, 391, 392, 404)

Adoption of Actions of Executive Committees

The rules, regulations, and other actions prescribed by the Executive Committees of the Board of Supervising Inspectors during the sessions of said Committees held on April 3 to 5, 1941, inclusive; May 19 to June 6, 1941, inclusive; July 14 to August 1, 1941, inclusive; October 16 and 17, 1941, inclusive; November 7 and 8, 1941, inclusive; and December 4 to 6, 1941, inclusive; published in the FEDERAL REGISTER issues of April 10, 1941; June 10, 1941; August 20 and 21, 1941; October 25, 1941; November 19, 1941; and December 10 and 24, 1941, respectively, are adopted. (R.S. 4405, as amended; 46 U.S.C. 375)

BOARD OF SUPERVISING INSPECTORS,
[SEAL] R. S. FIELD,
Director, Chairman.
CHARLES M. LYONS,
U. S. Supervising Inspector, 1st District, Boston, Mass.
GEORGE FRIED,
U. S. Supervising Inspector, 2d District, New York, N. Y.
EUGENE CARLSON,
U. S. Supervising Inspector, 3d District, Norfolk, Va.
JOHN F. OETTL,
U. S. Supervising Inspector, 4th District, New Orleans, La.
ROBERT E. COOMBS,
U. S. Supervising Inspector, 5th District, Cincinnati, Ohio.
EARL B. HULL,
U. S. Supervising Inspector, 6th District, Cleveland, Ohio.
WILLIAM FISHER,
U. S. Supervising Inspector, 7th District, San Francisco, Calif.

Approved:
WAYNE C. TAYLOR,
Acting Secretary of Commerce.

[F. R. Doc. 42-2154; Filed, March 12, 1942; 12:07 p.m.]

[5] See also § 1.38 of Subchapter A—Documentation, Entrance, and Clearance of Vessels, etc.

TITLE 50—WILDLIFE

CHAPTER I—FISH AND WILDLIFE SERVICE

PART 91—ALASKA GAME REGULATIONS

REGULATIONS RESPECTING GAME ANIMALS, LAND FUR-BEARING ANIMALS, GAME BIRDS, NONGAME BIRDS, AND NESTS AND EGGS OF BIRDS IN ALASKA

Pursuant to the authority and direction contained in section 10 of the Alaska Game Law of January 13, 1925 (43 Stat. 739), as amended by acts of February 14, 1931, 46 Stat. 1111; June 25, 1938, 52 Stat. 1169, and October 10, 1940, 54 Stat. 1103 (48 U.S.C. 198); I, Harold L. Ickes, Secretary of the Interior, upon consultation with and recommendation from the Alaska Game Commission, and having determined when, to what extent, and by what means game animals, land fur-bearing animals, game birds, nongame birds, and nests and eggs of birds may be taken, possessed, transported, bought, or sold in Alaska, in accordance with such determinations do hereby amend regulations 7, 8, 13, and 18, and regulation 6, schedule b of the regulations respecting game animals, land fur-bearing animals, game birds, nongame birds, and nests and eggs of birds in Alaska (Circular AGC-19; 6 F.R. 2913; 50 CFR 91) to the extent herein set out, and hereby adopt, effective July 1, 1942, said amended regulations as suitable regulations permitting and governing the taking of game animals, land fur-bearing animals, game birds, nongame birds, and nests and eggs of birds in Alaska:

Section 91.7 [Regulation 7] is amended to read as follows:

§ 91.7 *Taking game animals and methods of taking.* Game animals may be taken on areas not closed by §§ 91.5 and 91.6, during the respective open seasons and in the numbers not exceeding the respective season limits prescribed in § 91.8, with a shotgun (not larger than No. 10 gage, nor capable of holding more than three shells), rifle, or pistol, but not with the aid or use of a dog, machine or submachine gun, set gun of any description, bow and arrow, or spear, pit, deadfall, fire, jack light, searchlight, or other artificial light, or from or by means of a motor vehicle, airplane, steam or power launch, or any boat other than one propelled by paddle, oars, or pole, or while such animals are swimming; and when legally taken such animals, or parts thereof, may be possessed, transported, or sold as permitted by §§ 91.9 and 91.11.

Section 91.8 [Regulation 8], paragraphs (a), (b), (c), (d), (e), and (f) are amended to read as follows:

§ 91.8 *Open seasons and limits on certain game animals*—(a) *Deer bucks (with horns not less than 3 inches in length above the top of the skull).* East of longitude 138° in southeastern Alaska, September 16 to November 15.

West of longitude 138° in the drainage to Prince William Sound north of the center of the C. R. & N. W. Railway and west of Mountain Slough, including the islands of said sound, except Hawkins and Knight Islands, September 20 to September 30.

Limit: East of longitude 138°, 2 a season.

In area west of longitude 138°, 1 a season.

(b) *Moose, bulls (except yearlings and calves).* North of Alaska Range, September 1 to October 31.

South of Alaska Range, November 16 to January 15.

Limit: 1 a season.

(c) *Caribou.* September 1 to October 31.

Limit: By resident, 2 a season; by nonresident 1 a season.

(d) *Mountain sheep.* No open season.

(e) *Mountain goat (except kids).* First Judicial Division, except the watershed of Tracy Arm, September 16 to November 15.

In the rest of the Territory, September 1 to October 31.

Limit: 2 a season.

(f) *Bear (large brown and grizzly).* September 1 to June 20.

Limit: 2 a season, except on Admiralty Island 1.

* * * * *

Section 91.13 [Regulation 13] is amended as follows:

§ 91.13 *Fur districts and open seasons and limits on land fur-bearing animals.*

* * *

Fur district 1, open season designations under the subhead "Open seasons," are amended to read:

Mink, marten, land otter, weasel (ermine), fox (red, cross, and silver), and lynx. December 10 to January 10.

Muskrat. No open season.

Beaver. No open season.

Wolf, coyote, wolverine, marmot, and squirrel. No close season; may be taken by any person at any time in a legal manner.

Fur district 2, open season designations under the subhead "Open seasons," are amended to read:

Mink, marten, land otter, weasel (ermine), fox (red, cross, and silver), and lynx. December 1 to the last day of February.

Muskrat. April 1 to May 31.

Beaver. February 16 to April 15, except there shall be no open season on Kenai Peninsula.

Limit: 10 a season.

Wolf, coyote, wolverine, marmot, and squirrel. No close season; may be taken by any person at any time in a legal manner.

Fur district 4, open season designations under the subhead "Open seasons," are amended to read:

Mink, marten, land otter, weasel (ermine), fox (red, cross, silver, white, and blue), and lynx. November 16 to February 15.

Muskrat. March 10 to May 10.

Beaver. February 16 to April 15; except there shall be no open season in the Naknek River drainage and southwest thereof.

Limit: 10 a season.

Wolf, coyote, wolverine, marmot, and squirrel. No close season; may be taken by any person at any time in a legal manner.

Fur district 5, open season designations under the subhead "Open seasons," are amended to read:

Mink, marten, land otter, weasel (ermine), fox (red, cross, silver, white, and blue), and lynx. November 16 to the last day of February.

Muskrat. North of the Unalakleet River drainage, April 1 to June 7; south of the Unalakleet River, including its drainage, April 1 to May 31.

Beaver. March 1 to April 15. Limit: 10 a season.

Wolf, coyote, wolverine, polar bear, marmot, and squirrel. No close season; may be taken by any person at any time in a legal manner.

Fur district 6, open season designations under the subhead "Open seasons," are amended to read:

Mink, marten, land otter, weasel (ermine), fox (red, cross, silver, white, and blue), and lynx. November 16 to the last day of February.

Muskrat. March 1 to May 31.

Beaver. March 1 to April 15; except there shall be no open season in the Copper River drainage, or in that part of the Tanana River drainage east of the Richardson Highway from Richardson Monument (Mile 202 from Valdez) to Big Delta (Mile 280 from Valdez) and south and east of the Goodpaster River drainage.

Limit: 10 a season.

Wolf, coyote, wolverine, marmot, and squirrel. No close season; may be taken by any person at any time in a legal manner.

Fur district 7, open season designations under the subhead "Open seasons," are amended to read:

Mink, marten, land otter, weasel (ermine), fox (red, cross, silver, white, and blue), and lynx. November 6 to the last day of February.

Muskrat. March 1 to May 31.

Beaver. March 1 to April 15. Limit: 10 a season.

Wolf, coyote, wolverine, marmot, and squirrel. No close season; may be taken by any person at any time in a legal manner.

Fur district 8, open season designations under the subhead "Open seasons," are amended to read:

Mink, marten, land otter, weasel (ermine), fox (red, cross, silver, white, and blue), and lynx. December 1 to March 31.

Muskrat. April 10 to June 10.

Beaver. No open season.

Wolf, coyote, wolverine, polar bear, marmot, and squirrel. No close season; may be taken by any person at any time in a legal manner.

Section 91.18 [Regulation 18], the second sentence of paragraph b, is amended to read as follows:

§ 91.18 *Sealing, possession, and sale of beaver and marten skins.*

* * * * *

(b) * * * Persons residing in remote localities and finding it impracticable to present skins to an officer authorized to seal them may present such skins, together with an affidavit of lawful taking on a form furnished by the Commission to any person authorized by the Commission to attach thereto a tag permitting skins, if legally taken, to be sold and transported within the Territory, subject to examination and authentication by a representative of the Commission. * * *

Section 91.38 [Regulation 6, Schedule B], *Areas in which there are continuous close seasons on specified game animals, land fur-bearing animals, and game birds, except for scientific or propagating purposes* is amended by striking out the period at the end of paragraph (h) and adding the words "and in the watershed of Tracy Arm."; and by inserting a new paragraph at the end of the section as follows:

(n) *Muskrat.* On the Kodiak-Afognak Islands group.

In testimony whereof, I have hereunto set my hand and caused the official seal of the United States Department of the Interior to be affixed in the city of Washington, this 4th day of March 1942.

[SEAL] HAROLD L. ICKES,
Secretary of the Interior.

[F. R. Doc. 42-2182; Filed, March 13, 1942; 10:14 a. m.]

SUBCHAPTER K—ALASKA WILDLIFE PROTECTION

PART 92—REGULATIONS OF THE ALASKA GAME COMMISSION RELATING TO GUIDES, POISONS, AND LICENSES

By virtue of the authority conferred upon the Alaska Game Commission by the act of January 13, 1925, entitled "An Act to establish an Alaska Game Commission to protect game animals, land fur-bearing animals, and birds in Alaska, and for other purposes," (43 Stat. 739, as amended February 14, 1931, 46 Stat. 1111; U. S. Code, title 48, secs. 192-211, and June 25, 1938, 52 Stat. 1169 (48 U. S. Code 192-211), the following regulations for the protection of game animals, land fur-bearing animals, and birds in Alaska are made and published, to take effect July 1, 1942:

§ 92.1 *Employment of guides by nonresidents and aliens.* Nonresidents of the Territory or aliens taking game animals for any purpose, or polar bears for sport or trophies, or going afield to photograph large brown or grizzly bears, except nonresident Federal officials engaged in wildlife investigations in Alaska exempted by special permit of the Commission, are required to employ and be accompanied by a guide registered with and licensed by the Commission; but no such guide shall accompany in the field more than one nonresident or alien, except husband and wife and minor child all of whom are in possession of the required hunting licenses. In cases of actual emergency when a bear is attacking or is about to escape after being wounded, it shall be the duty of the guide to take such action as he deems necessary.*

*§§ 92.1 to 91.4, inclusive, issued under the authority contained in 42 Stat. 739, 46 Stat. 1111, 52 Stat. 1169; 48 U.S.C. 192-211.

§ 92.2 *Qualifications for guide licenses and issuance thereof.* Only resident citizens who have resided in the Territory for the 5 years immediately preceding application for registration and a guide license will be registered and licensed to act as guides for nonresidents and aliens taking game animals for any purpose, or polar bears for sport or trophies, or going afield to photograph large brown or grizzly bears.

The Alaska Game Commission will establish guide districts and maintain a register of such persons as are duly qualified and licensed to act as guides in such districts.

Applications for such registration and guide license shall be made on a form issued by the Commission and shall state applicant's citizenship and resident status, age, physical characteristics, permanent address, and district or districts in which he desires to operate, together with full information relative to his qualifications to act as guide, and shall be subscribed and sworn to by the applicant before an officer authorized to administer oaths.

Upon receipt of such application the Commission, through one of its members or such person as it shall designate, will arrange to determine, by such written and oral examinations and otherwise as it shall require, the qualifications of such applicant to act as a guide and his knowledge of the Alaska Game Law and regulations.

The member of the Commission or other person authorized to conduct such examination shall promptly file his report thereof with the Commission, together with his recommendation thereon, which report and recommendation shall be attached to the application and considered and determined at a regular or special meeting of the Commission.

If the Commission determines that the applicant does not possess sufficient field experience to qualify him to act as a principal guide but has all other qualifications, an assistant guide license may be issued to him, which shall authorize him to act as assistant to a principal guide.

In cases of emergency the Executive Officer of the Commission may, after investigation and satisfying himself of an applicant's qualifications, issue a special guide license to him upon payment of the required fee, authorizing him to guide the nonresident or alien hunter named in the application for such special license.

Extension or renewal of guiding privileges authorized by any guide license shall be made, in the discretion of the Commisison, only upon examination and approval as hereinbefore provided.

A registered guide license must bear the signature of the Executive Officer of the Commission. Each license shall expire on June 30 next succeeding its issuance, shall be revocable at the discretion of the Commission, and shall not be transferable.

Each licensed guide shall submit to the Commission, immediately upon completion of a hunting or photographing trip, a report containing the name and address of the nonresident or alien for whom he acted as guide, period covered by his services, number and species of animals taken, wounded and not secured, numbers and localities of each species of big game animal observed on the trip and such other information as the Commission may require.*

§ 92.3 *Designation and use of poison.* Pursuant to section 9 of the Alaska Game Law, the following substances are by the Commission designated poisons: Strychnine, arsenic, phosphorus, antimony, barium, the cyanides, corrosive sublimate, or any derivative or derivatives, compound or compounds thereof, which, by said section 9, are forbidden.

(a) To be used at any time to kill any game or wild fur-bearing animal or bird.

(b) To be put out where any game or wild fur-bearing animal or bird may come in contact with it.

(c) To be sold or given to any hunter or trapper, or

(d) To be possessed by any hunter or trapper.

Any person selling or otherwise disposing of any of the aforesaid poisons is required by said section 9 of the Alaska Game Law to keep a record in a special book showing the name and address of each person purchasing or otherwise procuring said poison, and the kind and amount thereof, such record to be, at all times, open to inspection by any wildlife agent or other officer authorized to enforce the Alaska Game Law and information thereof to be transmitted monthly to the Alaska Game Commission.*

§ 92.4 *Resident trapping and hunting licenses.* No resident of the Territory over 16 years of age, except a native-born Indian or Eskimo, shall take game animals, land fur-bearing animals, or birds in the Territory without first having obtained a resident hunting license for game animals or birds or a trapping license for land fur-bearing animals, but a person who is the holder of such trapping license shall be entitled to the privilege of hunting game animals or birds during the respective open seasons without a hunting license.

On and after July 1, 1942, all former regulations of the Alaska Game Commission relative to guides, poisons, and resident hunting and trapping licenses shall be and are hereby revoked.*

In testimony whereof, we have hereunto set our hands and caused the offi-

cial seal of the Commission to be affixed in the City of Washington, District of Columbia, this 23d day of January 1942.

[SEAL] EARL N. OHMER,
Commissioner First Judicial Division and Chairman.
FRANK P. WILLIAMS,
Commissioner Second Judicial Division.
ANDREW A. SIMONS,
Commissioner Third Judicial Division.
JOHN HAJDUKOVICH,
Commissioner Fourth Judicial Division.
FRANK DUFRESNE,
Executive Officer and Secretary.

[F. R. Doc. 42-2183; Filed, March 13, 1942; 10:13 a. m.]

Notices

DEPARTMENT OF THE INTERIOR.

Bituminous Coal Division.

[Docket No. A-1325]

PETITION OF BITUMINOUS COAL CONSUMERS' COUNSEL FOR THE ESTABLISHMENT OF THE SAME PRICE CLASSIFICATIONS AND MINIMUM PRICES FOR THE COALS PRODUCED AT MINES IN SUBDISTRICT 4 OF DISTRICT NO. 13 FOR SHIPMENTS BY RIVER AS ARE APPLICABLE TO SUCH COALS FOR TRUCK SHIPMENTS, PURSUANT TO SECTION 4 II (d) OF THE BITUMINOUS COAL ACT OF 1937

ORDER POSTPONING HEARING

Intervenor, District Board 8, having moved that the hearing in the above-entitled matter, scheduled for March 16, 1942, at 10 o'clock in the forenoon of that day, be postponed until 10 o'clock in the forenoon of March 19, 1942; and

It appearing that good cause therefor has been shown;

Now, therefore, it is ordered, That the hearing in the above-entitled matter be and it hereby is postponed from March 16, 1942 until 10 o'clock in the forenoon of March 19, 1942, at the place and before the officers heretofore designated.

Dated: March 12, 1942.

[SEAL] DAN H. WHEELER,
Acting Director.

[F. R. Doc. 42-2164; Filed, March 13, 1942; 10:06 a. m.]

[Docket No. B-48]

IN THE MATTER OF SUN COAL COMPANY, CODE MEMBER, DEFENDANT

ORDER AMENDING NOTICE OF AND ORDER FOR HEARING AND RESCHEDULING HEARING AND REDESIGNATING EXAMINER

A complaint dated September 9, 1941, pursuant to the provisions of sections 4 II (j) and 5 (b) of the Bituminous Coal Act of 1937, having been duly filed on September 24, 1941, by the Bituminous Coal Producers Board for District No. 8, a district board, complainant, and Notice of and Order for Hearing in respect to the subject matter of such complaint having been issued herein on December 6, 1941, and subsequently said complaint having been amended by Order, dated February 28, 1942, granting complainant's motion to amend dated February 2, 1942; and

The above-entitled matter having been scheduled for hearing on January 26, 1942, at 10:00 a. m. at a hearing room of the Bituminous Coal Division at the United States Post Office, Room 214, Knoxville, Tennessee, before Travis Williams or any other officer or officers of the Bituminous Coal Division duly designated for that purpose, pursuant to Order dated December 6, 1941, and subsequently postponed pursuant to Order dated January 21, 1942, to a date and place to be thereafter designated by appropriate order; and

The Acting Director deeming it advisable that said Notice of and Order for Hearing should be amended and the place and date of such hearing should now be designated;

Now, therefore, it is ordered, That a hearing in the above-entitled matter be held on April 27, 1942, at a hearing room of the Bituminous Coal Division at 10 a. m., at the Federal Court Room, Knoxville, Tennessee.

It is further ordered, That Charles S. Mitchell be and he is hereby designated to preside at such hearing vice Travis Williams.

It is further ordered, That the Notice of and Order for Hearing dated December 6, 1941 in the above-entitled matter, as corrected by Order dated January 14, 1942, be and the same is hereby amended by adding after the last paragraph thereof the following paragraph:

That the defendant sold during the period March 18, 1941 to March 31, 1941, both dates inclusive, approximately 593.05 tons of 6" block coal produced at the aforesaid mine to numerous purchasers located in various market areas, at a price of $3.25 per net ton whereas the effective minimum price was $3.35 per net ton f. o. b. the mine, respectively, as stated in the Schedule of Effective Minimum Prices for District No. 8 for All Shipments Except Truck. The defendant also sold in the manner described herein, approximately 972.75 net tons of 2½" x 6" egg coal produced at the aforesaid mine at prices varying from $2.65 to $2.86 per net ton f. o. b. the mine whereas the effective minimum prices for such coal were $2.75 to $2.96 per net ton f. o. b. the mine, respectively, as more fully set out in the Schedule of Effective Minimum Prices for District No. 8 for All Shipments Except Truck.

It is further ordered, That the Notice of and Order for Hearing dated December 6, 1941, as corrected by Order dated January 14, 1942, in the above-entitled matter shall, in all other respects, remain in full force and effect.

Dated: March 11, 1942.

[SEAL] DAN H. WHEELER,
Acting Director.

[F. R Doc. 42-2165; Filed, March 13, 1942; 10:06 a. m.]

[Docket No. A-1312]

PETITION OF DISTRICT BOARD NO. 4 FOR THE ESTABLISHMENT OF PRICE CLASSIFICATIONS AND MINIMUM PRICES FOR THE COALS OF MINE INDEX NOS. 335, 336, 337, AND 338, AND THE REVISION OF PRICE CLASSIFICATIONS AND MINIMUM PRICES FOR THE COALS OF MINE INDEX NOS. 160, 206, AND 207, ALL OF THE MUSKINGUM COAL COMPANY, A CODE MEMBER IN DISTRICT NO. 4.

NOTICE OF AND ORDER FOR HEARING AND ORDER GRANTING TEMPORARY RELIEF

A petition, pursuant to the Bituminous Coal Act of 1937, having been duly filed with this Division by the above-named party;

It is ordered, That a hearing in the above-entitled matter under the applicable provisions of said Act and the rules of the Division be held on April 8, 1942, at 10 o'clock in the forenoon of that day, at a hearing room of the Bituminous Coal Division, 734 Fifteenth Street NW., Washington, D. C. On such day the Chief of the Records Section in room 502 will advise as to the room where such hearing will be held.

It is further ordered, That W. A. Shipman or any other officer or officers of the Division duly designated for that purpose shall preside at the hearing in such matter. The officers so designated to preside at such hearing are hereby authorized to conduct said hearing, to administer oaths and affirmations, examine witnesses, subpoena witnesses, compel their attendance, take evidence, require the production of any books, papers, correspondence, memoranda, or other records deemed relevant or material to the inquiry, to continue said hearing from time to time, and to prepare and submit proposed findings of fact and conclusions and the recommendation of an appropriate order in the premises, and to perform all other duties in connection therewith authorized by law.

Notice of such hearing is hereby given to all parties herein and to persons or entities having an interest in this proceeding and eligible to become a party herein. Any person desiring to be admitted as a party to this proceeding may file a petition of intervention in accordance with the rules and regulations of the Bituminous Coal Division for proceedings instituted pursuant to section 4 II (d) of the Act, setting forth the facts on the basis of which the relief in the original petition is supported or opposed or on the basis of which other relief is sought. Such petitions of intervention shall be filed with the Bituminous Coal Division on or before April 3, 1942.

All persons are hereby notified that the hearing in the above-entitled matter and any orders entered therein, may concern, in addition to the matters specifically alleged in the petition, other matters necessarily incidental and related thereto, which may be raised by amendment to the petition, petitions of intervention or otherwise, or which may be necessary corollaries to the relief, if any, granted on the basis of this petition.

The matter concerned herewith is in regard to the petition of District Board No. 4 for—

(1) the establishment of price classifications and minimum prices for the coals of Mine Index Nos. 335, 336, 337, and 338 of The Muskingum Coal Company for all shipments except truck;

(2) the revision of the price classifications and minimum prices effective for the coals of Mine Index Nos. 160, 206, and 207 of The Muskingum Coal Company, by increasing the minimum prices therefor 43¢ per net ton for rail shipment to Philo (Duncan Falls), Ohio.

Attention is called to the fact that the Baltimore & Ohio Railroad Company has by its tariff Ohio No. WL-3813, effective February 9, 1942, reduced the freight rate on coal from 60¢ per net ton to 17¢ per net ton on rail shipments from certain points of origin, including the rail shipping points for Mine Index Nos. 160, 206, 207, 335, 336, 337, and 338, to Philo (Duncan Falls), Ohio.

In addition to the above, the matter concerned herewith shall be concerned with—

(3) the revision of the minimum prices effective for rail shipments to Philo (Duncan Falls), Ohio, of all coals in District No. 4 affected by the reduction in freight rates set out above.

It is ordered, That pending final disposition of the above-entitled matter, temporary relief is granted as follows: Commencing forthwith, the Schedules of Effective Minimum Prices for District No. 4, For All Shipments Except Truck, are supplemented to include the price classifications and minimum prices set forth in Supplement R, annexed hereto and hereby made a part hereof.

Notice is hereby given that applications to stay, terminate or modify the temporary relief herein granted may be filed pursuant to the Rules and Regulations Governing Practice and Procedure Before the Bituminous Coal Division in Proceedings Instituted Pursuant to section 4 II (d) of the Bituminous Coal Act of 1937.

Dated: March 12, 1942.

[SEAL] DAN H. WHEELER, *Acting Director.*

[F. R. Doc. 42-2166; Filed, March 13, 1942; 10:06 a. m.]

[Docket No. B-226]

IN THE MATTER OF PACIFIC COAL COMPANY, CODE MEMBER

NOTICE OF AND ORDER FOR HEARING

1. Under the provisions of the Bituminous Coal Act of 1937 (the "Act"), district boards are authorized in appropriate cases to file complaints of violations of the Act, the Bituminous Coal Code (the "Code") and the rules and regulations of the Bituminous Coal Division (the "Division").

2. The Division on January 19, 1942, referred to District Board No. 9 information in its possession bearing on whether or not violations of the Act, the Code and Rules and Regulations thereunder have been committed by the Pacific Coal Company, the Code member named above (hereinafter referred to as the "Code member") who operates the Pacific Mine, Mine Index No. 64, Muhlenberg County, Kentucky, District No. 9, in connection with:

A. (1) offering on or about October 23, 1940, to sell to the Enterprise Fuel Company, Centerville, Iowa, various sizes of coal produced at the aforesaid mine at prices ranging from 12 cents to 22 cents below the prices established therefor in the Schedule of Effective Minimum Prices for District No. 9 For All Shipments Except Truck, whereas the Enterprise Fuel Company, Centerville, Iowa, was not a registered distributor, (2) selling approximately 3,673 tons of various sizes of coal produced at the aforesaid mine from October 1, 1940, through April 10, 1941, to various purchasers f. o. b. the mine at prices which were below the effective minimum prices therefor as set forth in said Schedule, and (3) selling on or about April 12, 1941, approximately 217 tons of 6" x 8" lump coal produced at the aforesaid mine to the Baltimore & Ohio Railroad for railroad fuel at the mine run price of $1.65 per net ton f. o. b. the mine, whereas the effective minimum price for such coal was $1.80 per ton f. o. b. the mine as set forth in said Schedule, resulting in violations of section 4 II (e) of the Act and Part II (e) of the Code;

B. (1) selling approximately 19,229 tons of various sizes of coal produced at the aforesaid mine to the Illinois Central Railroad for railroad fuel during the period October 1, 1940, to April 12, 1941, and by making substitutions of larger sizes on spot orders and/or contracts for said railroad fuel without prior approval of the Director or his duly designated representative and without filing the form prescribed by the Division with the Statistical Bureau, and (2) selling approximately 7,565 tons of various sizes of coal produced at the aforesaid mine to the Wabash Railroad for railroad fuel during the period October 1, 1940, to April 8, 1941, and making substitutions of larger sizes on spot orders and/or contracts for said railroad fuel without prior approval of the Director or his duly designated representative and without filing the form prescribed by the Division with the Statistical Bureau, resulting in violations of section 4 II (e) of the Act and Part II (e) of the Code and Rule 1 (f) of Section XI of the Marketing Rules and Regulations;

C. submitting a bid to the United States War Department, U. S. Engineers Office, Nashville, Tennessee, on or about February 20, 1941, for the furnishing of six cars of 3" x 1¼" coal produced at the aforesaid mine, together with an analysis allegedly representative of that coal, which was a copy of an analysis of nine cars of 6" x 2" egg coal, made by the United States Bureau of Mines on April 22, 1939, (a copy of the analysis which accompanied the bid was not filed with the Statistical Bureau and the District Board for the District in which the coal was produced), resulting in a violation of section 4 II (i) 8 of the Act and Part II (i) 8 of the Code and Rules 1 and 2 of Section VIII and Rule 8 of Section XIII of the Marketing Rules and Regulations;

D. falsely reporting on the invoices the sizes of approximately 23,303 tons of coal produced at the aforesaid mine, which was sold to various purchasers during the period October 1, 1940, to April 10, 1941, both dates inclusive, and failing to invoice the coal so sold under the size, price classification and other designation therefor in the applicable minimum price schedule published by the Division, resulting in violations of section 4 II (i) 8 of the Act and Part II (i) 8 of the Code and Rule 2 of Section XII and Rule 8 of Section XIII of the Marketing Rules and Regulations;

E. prepaying the transportation charges on approximately 912 tons of various sizes of coal produced at the aforesaid mine, which was sold to the Pacific Coal Company, Nashville, Tennessee, a retail dealer, during the period December 7, 1940, to June 14, 1941, with the intent to or having the effect of granting a discriminatory credit allowance, resulting in violations of sections 4 II (i) 3 and 6 of the Act, Parts II (i) 3 and 6 of the Code, and Rule 1 (J) of Sections VII and Rules 3 and 6 of Section XIII of the Marketing Rules and Regulations;

F. prepaying the transportation charges on approximately 1,942 tons of various sizes of coal produced at the aforesaid mine, which was sold to the Pacific Coal Company, Nashville, Tennessee, a retail dealer, during the period December 6, 1940, through April 2, 1941, with the intent to or having the effect of granting a discriminatory credit allowance and not charging the amounts thereof to the Pacific Coal Company, thereby reducing the price paid for such coal below the effective minimum prices as set forth in the aforementioned Schedule, resulting in violations of sections 4 II (e) and 4 II (i) 3 and 6 of the Act, Parts II (e) and II (i) 3 and 6 of the Code, and Rule 1 (J) of Section VII and Rules 3 and 6 of Section XIII of the Marketing Rules and Regulations; and

G. (1) paying on or about June 18, 1941, a premium on a life insurance policy for Lola M. Colver, allegedly owner of the Pacific Coal Company, Nashville, Tennessee, a retail dealer, thereby extending to this purchaser of coal from said code member, a privilege not extended to all purchasers under like terms and conditions, or under similar circumstances, and (2) paying during the period September 1, 1940, through April 10, 1941, stenographer's salaries, salesmen's salaries and expenses, advertising expenses, stationery, postage, commissions, telephone and telegraph expenses for the Pacific Coal Company, Louisville, Kentucky, a retail dealer, thereby extending to this purchaser of coal from said Code member a privilege not extended to all purchasers under like terms and conditions, or under similar circum-

stances, resulting in violations of section 4 II (i) 6 of the Act and Part II (i) 6 of the Code and Rule 6 of Section XIII of the Marketing Rules and Regulations.

3. District Board No. 9 has notified the Division that it does not intend to institute compliance proceedings against the Code member in this matter upon the basis of the information submitted to it by the Division.

4. Section 6 (a) of the Act provides in part that in the event that a District Board shall fail for any reason to take action authorized or required by this Act, then the Division may take such action in lieu of the District Board.

5. District Board No. 9 having failed to take action as authorized or required by the Act on the matters hereinbefore described, the Division finds it necessary in the proper administration of the Act to take action thereon in lieu of the Board as in this Notice of and Order for Hearing provided, pursuant to section 6 (a) and other pertinent provisions of the Act for the purpose of determining:

(a) Whether or not the code member has wilfully violated sections 4 II (e), (i) 8 and (i) 3 and 6 of the Act and Parts II (e), (i) 8 and (i) 3 and 6 of the Code; Rule 1 (j), Section VII; Rules 1 and 2, Section VIII; Rule 1 (f), Section XI; Rule 2, Section XII; Rule 8, Section XIII, Rules 3 and 6, Section XIII of the Marketing Rules and Regulations; and

(b) Whether or not in the event that the Code member is found to have also violated the Act, the Code and Rules and Regulations thereunder, an Order should be entered revoking the code membership of the Pacific Coal Company or directing the Pacific Coal Company to cease and desist from violating the Act, the Code and the Rules and Regulations thereunder.

Now, therefore, it is hereby ordered, That a hearing pursuant to sections 4 II (j), 5 (b), and 6 (a), and other pertinent provisions of the Act to determine whether or not the aforementioned Code member has committed the violations in the respects heretofore described and whether or not the Code membership of said Code member should be revoked or an order should be entered directing the Code member to cease and desist from violating the Act and the Code and rules and regulations of the Division thereunder be held on April 22, 1942, at 10 a. m. at a hearing room of the Division at the Circuit Court Room, Madisonville, Kentucky.

It is further ordered, That Charles S. Mitchell or any other officer or officers of the Division duly designated for that purpose shall preside at the hearing in such matter. The officer so designated to preside at such hearing is hereby authorized to conduct said hearing, to administer oaths and affirmations, examine witnesses, compel their attendance, take evidence, require the production of any books, correspondence, memoranda or other records deemed relevant or material to the inquiry, to continue said hearing from time to time and to such places as he may direct by announcement at said hearing or any adjourned hearing, or by subsequent notice, and to prepare and submit proposed findings of fact and conclusions, and the recommendation of an appropriate order in the premises, and to perform all other duties in connection therewith authorized by law.

Notice of such hearing is hereby given to said Code member and to all other parties herein and to all persons and entities having an interest in such proceeding. Any person or entity eligible under § 301.123 of the Rules and Regulations Governing Practice and Procedure Before the Division in Proceedings Instituted Pursuant to section 4 II (j) and 5 (b) of the Act may file a petition for intervention not later than five (5) days before the date set for hearing herein.

Notice is hereby given that answer setting forth the position of the Code member with reference to the matters hereinbefore described must be filed with the Division at its Washington Office or with one of the Statistical Bureaus of the Division within twenty (20) days after date of service of a copy hereof on the Code member; and that any failure to file an answer within such period, unless otherwise ordered, shall be deemed to be an admission by the Code member of the commission of the violations hereinbefore described and a consent to the entry of an appropriate order thereon.

All persons are hereby notified that the hearing in the above-entitled matter and orders entered therein may concern, in addition to the matters specifically alleged herein, other matters incidental and related thereto, whether raised by amendment, petition for intervention, or otherwise, and all persons are cautioned to be guided accordingly.

Dated: March 11, 1942.

[SEAL] DAN H. WHEELER,
Acting Director.

[F. R. Doc. 42-2167; Filed, March 13, 1942; 10:06 a. m.]

[Dockets No. 1657-FD]

IN THE MATTER OF J. S. TURLEY, DOING BUSINESS UNDER THE NAME AND STYLE OF INDUSTRIAL COAL SALES CO., REGISTERED DISTRIBUTOR, REGISTRATION NO. 4687

NOTICE OF AND ORDER FOR HEARING

The Bituminous Coal Division (the "Division") finds it necessary in the proper administration of the Bituminous Coal Act of 1937 (the "Act"), and the Bituminous Coal Code (the "Code") promulgated thereunder to determine

A. Whether or not J. S. Turley, doing business under the name and style of Industrial Coal Sales Co., Registered Distributor, Registration No. 4687 (hereinafter sometimes referred to as the "Registered Distributor"), whose address is 4237 Park Avenue, St. Louis, Missouri, has violated any provisions of the Act, the Code, and Orders and Regulations of the Division, including the Marketing Rules and Regulations, Rules and Regulations for the Registration of Distributors, and the Distributor's Agreement (the "Agreement") dated October 19, 1940, executed and filed by J. S. Turley, pursuant to Order of the Division dated June 19, 1940, in General Docket No. 12, and more particularly whether or not said registered distributor:

1. During the period from November 12, 1940, to August 20, 1941, both dates inclusive, accepted discounts from the effective minimum prices on approximately 2,978 net tons (61 cars) of coal purchased by him from Old Ben Coal Corporation, a code member in District No. 10, which was produced at the Old Ben No. 8 Mine (Mine Index No. 118) and the Old Ben No. 15 Mine (Mine Index No. 121), of said code member, and resold said coal to Anchor Coal Co., a retailer, which financially or otherwise controlled said distributor, resulting in violations of § 304.19 (c) of the Rules and Regulations for the Registration of Distributors, and paragraph (h) of the Agreement.

2. Accepted and retained the discounts in the transactions referred to in Paragraph A 1 hereof when said Registered Distributor was in fact or in effect an agency or instrumentality of the Anchor Coal Co., a retailer, resulting in violations of section 4 II (i) 12 of the Act, Rule 12 of Section XIII of the Marketing Rules and Regulations and paragraph (c) of the Agreement;

3. Accepted and retained the distributor's discounts on the coal referred to in Paragraph A 1 hereof, although said coal was not purchased for bona fide resale resulting in violations of paragraph (d) of the Agreement.

4. Accepted and retained the discounts in the transactions referred to in Paragraph A 1 hereof, although no service of value was rendered to the code member vendor in connection with such sales, and although said transactions were entered into primarily for the purpose of unjustly enriching the Registered Distributor, and when except for the incidence of section 4 II (h) of the Act, said Anchor Coal Co. would have purchased the coal direct from a code member, resulting in violations of paragraph (g) of the Agreement;

5. Failed to set forth in his application for registration dated October 19, 1940, as corrected October 30, 1940, his affiliation with the Anchor Coal Co., as required by § 304.11 (6) of the Rules and Regulations for the Registration of Distributors resulting in a violation of paragraph (f) of the Agreement.

B. Whether or not the registration of said J. S. Turley, doing business under the name and style of Industrial Coal Sales Co., should be revoked or suspended or other appropriate penalties imposed.

It is therefore ordered, That a hearing pursuant to § 304.14 of the Rules and Regulations for the Registration of Distributors, to determine whether or not the aforementioned J. S. Turley has committed violations in the respects heretofore described and whether or not the registration of said distributor should be revoked or suspended, or other appropriate penalties imposed, be held on April

15, 1942, at 10 a. m., at a hearing room of the Division at the Coronado Hotel, St. Louis, Missouri.

It is further ordered, That Edward J. Hayes or any other officer or officers of the Division duly designated for that purpose shall preside at the hearing in such matter. The officer so designated to preside at such hearing is hereby authorized to conduct said hearing, to administer oaths and affirmations, examine witnesses, subpoena witnesses, compel their attendance, take evidence, require the production of any books, papers, correspondence, memoranda, or other records deemed relevant or material to the inquiry, to continue said hearing from time to time, and to such places as he may direct by announcement at said hearing or any adjourned hearing or by subsequent notice, and to prepare and submit proposed findings of fact and conclusions and the recommendation of an appropriate order in the premises, and to perform all other duties in connection therewith authorized by law.

Notice of such hearing is hereby given to said J. S. Turley and to all persons and entities having an interest in such proceeding.

Notice is hereby given that answer setting forth the position of the aforementioned J. S. Turley, with reference to the matters hereinbefore described, must be filed with the Bituminous Coal Division at its Washington Office or with any one of the statistical bureaus of the Division, within twenty (20) days after date of service hereof on J. S. Turley, and that failure to file an answer herein within such period, unless the presiding officer shall otherwise order, shall be deemed to be an admission by J. S. Turley of the commission of the violations hereinbefore described and a consent to the entry of an appropriate order thereon.

All persons are hereby notified that the hearing in the above-entitled matter and orders entered therein may concern, in addition to the matters specifically referred to herein, other matters incidental and related thereto, whether raised by amendment, petition for intervention, or otherwise, and all persons are cautioned to be guided accordingly.

Dated: March 11, 1942.

[SEAL] DAN H. WHEELER,
Acting Director.

[F. R. Doc. 42-2168; Filed, March 13, 1942; 10:07 a. m.]

[Docket No. B-165]

IN THE MATTER OF EARL HENRY AND D. HENRY, INDIVIDUALLY AND AS COPARTNERS, DOING BUSINESS UNDER THE NAME AND STYLE OF HENRY COAL COMPANY [EARL HENRY AND D. HENRY (HENRY COAL COMPANY)], CODE MEMBER, DEFENDANTS

ORDER POSTPONING HEARING

The above entitled matter having been heretofore set for hearing on March 18, 1942, at 10 a. m. at a hearing room of the Bituminous Coal Division at the United States Post Office, Federal Building, Huntington, West Virginia; and

It appearing to the Acting Director that said hearing should be postponed;

Now, therefore, it is ordered, That the hearing in the above entitled matter be, and the same hereby is, postponed from 10 a. m. on March 18, 1942 to 10 a. m. on April 4, 1942, at a hearing room of the Bituminous Coal Division at the U. S. Post Office, Huntington, West Virginia.

Dated: March 11, 1942.

[SEAL] DAN H. WHEELER,
Acting Director.

[F. R. Doc. 42-2169; Filed, March 13, 1942; 10:07 a. m.]

[Docket No. B-225]

IN THE MATTER OF C. C. WILSON, CODE MEMBER

NOTICE OF AND ORDER FOR HEARING

1. Under the provisions of the Bituminous Coal Act of 1937 (the "Act"), district boards are authorized in appropriate cases to file complaints of violations of the Act, the Bituminous Coal Code (the "Code") and the rules and regulations of the Bituminous Coal Division (the "Division").

2. The Division on December 31, 1941, referred to District Board No. 9, information in its possession bearing on whether or not violations of the Act, the Code, and Rules and Regulations thereunder have been committed by C. C. Wilson, the Code member above-named (hereinafter referred to as the "Code member"), who operates the Wilson Mine, Mine Index No. 802, located in Hopkins County, Kentucky, District No. 9, in connection with selling to the Hart Coal Company, a registered distributor, Registration No. 4042, Mortons Gap, Kentucky, for rail shipments, during the period from March 21, 1941, to May 15, 1941, both dates inclusive, approximately 56.95 tons of 1¼" slack coal and 1,183.93 tons of run of mine coal produced at said mine at 60 cents and $1.40 per net ton, respectively, although at the time of said transactions, no rail classifications or prices, temporary or final, had been established for the coal produced at the above-named mine resulting in a violation of the Order of the Director dated October 9, 1940, in General Docket No. 19.

3. District Board No. 9 has notified the Division that it does not intend to institute compliance proceedings against the Code member in this matter upon the basis of the information submitted to it by the Division.

4. Section 6 (a) of the Act provides in part, that in the event that a District Board shall fail for any reason to take action authorized or required by this Act then the Division may take such action in lieu of the District Board.

5. District Board No. 9 having failed to take action as authorized or required by the Act on the matters hereinbefore described, the Division finds it necessary in the proper administration of the Act to take action thereon in lieu of the Board as in this Notice of and Order for Hearing provided, pursuant to section 6 (a) and other pertinent provisions of the Act for the purpose of determining:

(a) Whether or not the code member has wilfully violated the Order of the Director dated October 9, 1940, in General Docket No. 19; and

(b) Whether or not in the event that the code member is found to have so violated the Act, the Code and rules and regulations thereunder, an Order should be entered revoking the Code membership of C. C. Wilson or directing C. C. Wilson to cease and desist from violating the Act, the Code, and the rules and regulations thereunder.

Now, therefore, it is hereby ordered, That a hearing pursuant to sections 4 II (j), 5 (b), and 6 (a), and other pertinent provisions of the Act to determine whether or not the aforementioned Code member has committed the violations in the respects heretofore described and whether or not the Code membership of said Code member should be revoked or an order should be entered directing the Code member to cease and desist from violating the Act and the Code and rules and regulations of the Division thereunder be held on April 21, 1942, at 10 a. m., at a hearing room of the Division at the Circuit Court Room, Madisonville, Kentucky.

It is further ordered, That Charles S. Mitchell or any other officer or officers of the Division duly designated for that purpose shall preside at the hearing in such matter. The officer so designated to preside at such hearing is hereby authorized to conduct said hearing, to administer oaths and affirmations, examine witnesses, compel their attendance, take evidence, require the production of any books, correspondence, memoranda or other records deemed relevant or material to the inquiry, to continue said hearing from time to time and to such places as he may direct by announcement at said hearing or any adjourned hearing, or by subsequent notice, and to prepare and submit proposed findings of fact and conclusions, and the recommendation of an appropriate order in the premises, and to perform all other duties in connection therewith authorized by law.

Notice of such hearing is hereby given to said Code member and to all other parties herein and to all persons and entities having an interest in such proceeding. Any person or entity eligible under § 301.123 of the Rules and Regulations Governing Practice and Procedure Before the Division in Proceedings Instituted Pursuant to section 4 II (j) and 5 (b) of the Act may file a petition for intervention not later than five (5) days before the date set for hearing herein.

Notice is hereby given that answer setting forth the position of the Code member with reference to the matters hereinbefore described must be filed with the Division at its Washington Office or with one of the Statistical Bureaus of the Division within twenty (20) days after date of service of a copy hereof on the Code member; and that any failure to file an answer within such period, unless otherwise ordered, shall be deemed to be an admission by the Code member of the commission of the violations hereinbefore described and a consent to the entry of an appropriate order thereon.

All persons are hereby notified that the hearing in the above-entitled matter and orders entered therein may concern, in addition to the matters specifically alleged herein, other matters incidental and related thereto, whether raised by amendment, petition for intervention, or otherwise, and all persons are cautioned to be guided accordingly.

Dated: March 11, 1942.

[SEAL] DAN H. WHEELER, *Acting Director.*

[F. R. Doc. 42-2170; Filed, March 13, 1942; 10:07 a. m.]

[Docket No. B-214]

IN THE MATTER OF BECCARIA COAL MINING COMPANY, A PARTNERSHIP, ALSO KNOWN AS FRED DEZAIFFE, SR., AND FRED DEZAIFFE, JR., INDIVIDUALLY, AND AS CO-PARTNERS TRADING AND DOING BUSINESS AS BECCARIA COAL MINING COMPANY, CODE MEMBER, DEFENDANTS

NOTICE OF AND ORDER FOR HEARING

A complaint dated February 5, 1942, pursuant to the provisions of sections 4 II (j) and 5 (b) of the Bituminous Coal Act of 1937, having been duly filed on February 10, 1942, by Bituminous Coal Producers' Board for District No. 1, a district board, complainant, with the Bituminous Coal Division alleging wilful violation by the defendants of the Bituminous Coal Code or rules and regulations thereunder;

It is ordered, That a hearing in respect to the subject matter of such complaint be held on April 15, 1942, at 10 a. m. at a hearing room of the Bituminous Coal Division at Room 118, Fifth Floor of Colonial Hotel, Altoona, Pennsylvania.

It is further ordered, That D. C. McCurtain or any other officer or officers of the Bituminous Coal Division duly designated for that purpose shall preside at the hearing in such matter. The officer so designated to preside at such hearing is hereby authorized to conduct said hearing, to administer oaths and affirmations, examine witnesses, subpoena witnesses, compel their attendance, take evidence, require the production of any books, papers, correspondence, memoranda or other records deemed relevant or material to the inquiry, to continue said hearing from time to time, and to such places as he may direct by announcement at said hearing or any adjourned hearing or by subsequent notice, and to prepare and submit proposed findings of fact and conclusions and the recommendation of an appropriate order in the premises, and to perform all other duties in connection therewith authorized by law.

Notice of such hearing is hereby given to said defendants and to all other parties herein and to all persons and entities having an interest in such proceeding. Any person or entity eligible under § 301.123 of the Rules and Regulations Governing Practice and Procedure Before the Bituminous Coal Division in Proceedings Instituted Pursuant to sections 4 II (j) and 5 (b) of the Bituminous Coal Act of 1937, may file a petition for intervention not later than five (5) days before the date herein set for hearing on the complaint.

Notice is hereby given that answer to the complaint must be filed with the Bituminous Coal Division at its Washington Office or with any one of the statistical bureaus of the Division, within twenty (20) days after date of service thereof on the defendants; and that any defendant failing to file an answer within such period, unless otherwise ordered, shall be deemed to have admitted the allegations of the complaint herein and to have consented to the entry of an appropriate order on the basis of the facts alleged.

All persons are hereby notified that the hearing in the above entitled matter and orders entered therein may concern, in addition to the matters specifically alleged in the complaint herein, other matters incidental and related thereto, whether raised by amendment of the complaint, petition for intervention, or otherwise, and all persons are cautioned to be guided accordingly.

The matter concerned herewith is in regard to the complaint filed by said complainant, alleging wilful violation by the above named defendants of the Bituminous Coal Code or rules and regulations thereunder as follows:

1. That said defendants, Fred DeZaiffe, Sr., whose address is Ginter, Pennsylvania, and Fred DeZaiffe, Jr., whose address is Houtzdale, Pennsylvania, wilfully violated Rule 13 of Section II of the Marketing Rules and Regulations by paying to Eastern Coal & Coke Company, Philadelphia, Pennsylvania, sales agent of Code Member, a commission of 26 cents per net ton for sale on its behalf of approximately 474.95 net tons of mine run coal, Size Group No. 3, produced by said defendants at their Leland #8 Mine, Mine Index No. 273, located in Clearfield County, Pennsylvania, in District No. 1, and shipped between the dates of January 3, 1941 and May 29, 1941, both dates inclusive, and by paying to said Eastern Coal & Coke Company a commission of 27 cents per net ton for sale on its behalf of approximately 55.30 net tons of mine run coal, Size Group No. 3, produced at their aforesaid mine, and shipped on or about May 14, 1941, which commissions were and are in excess of the maximum discount allowable to a registered distributor on such transactions as established by Order of the Director dated June 19, 1940, in General Docket No. 12, and which commissions were paid pursuant to a sales agency agreement entered into between Code Member and said Eastern Coal & Coke Company after August 8, 1940, to wit, October 28, 1940, and although, at the time of said transactions, Code Member had not filed an application for permission to pay commissions in excess of the maximum discounts allowable to a registered distributor, as required by Rule 13 of Section II of the Marketing Rules and Regulations.

2. That said defendants wilfully violated sections 4 II (e) and (h) of the Act, Part II (e) and (h) of the Code and Rule 1 of Section III of the Marketing Rules and Regulations by selling and delivering during the period from March 4, 1941 to March 27, 1941, both dates inclusive, to Debevoise-Anderson Company, Inc., registered distributor, Registration No. 2193, whose address is New York, New York, for resale in carload lot quantities, approximately 407.10 net tons of mine run coal, Size Group No. 3, produced at their aforesaid mine, and allowing to said distributor a discount of 17 cents per net ton from the effective minimum f. o. b. mine price on said coal; which discount was and is in excess of the maximum allowable discount of 12 cents per net ton from the effective minimum f. o. b. mine price, as established by Order of the Director, dated June 19, 1940, in General Docket No. 12.

3. That said defendants wilfully violated the Order of the Director dated October 9, 1940, entered in General Docket No. 19, by selling and delivering during the period from January 10 to March 28, 1941, both dates inclusive, to Debevoise-Anderson Company, Inc., registered distributor, Registration No. 2193, whose address is New York, New York, for resale in carload lot quantities, approximately 316.30 net tons of machine cuttings, produced at their aforesaid mine, when at the time of said transactions no temporary or final minimum price or classification for machine cuttings produced at their aforesaid mine had been established by the Division, and Code Member had not filed a petition pursuant to section 4 II (d) of the Act for the establishment of a price or classification for such coal; or

4. That said defendants wilfully violated section 4 II (e) of the Act, Part II (e) of the Code and Rule 1 of Section III of the Marketing Rules and Regulations by selling and delivering during the period from January 10 to March 28, 1941, both dates inclusive, to Debevoise-Anderson Company, Inc., registered distributor, Registration No. 2193, whose address is New York, New York, for resale in carload lot quantities to the Dobler Brewing Company of Albany, New York, approximately 316.30 net tons of nut and slack machine cuttings, produced at their aforesaid mine, at a price of $2.10 per net ton f. o. b. the mine, less 12 cents per net ton discount, whereas the only price established for coal produced at said mine was $2.35 per net ton f. o. b. the mine, for mine run coal, Size Group No. 3, as set forth in the Schedule of Effective Minimum Prices for District No. 1 For All Shipments Except Truck. Said coal should have been sold at a price of $2.35 per net ton f. o. b. the mine, pursuant to Price Instruction No. 5 of said schedule, and accordingly, the above transactions constituted sales below the effective minimum prices and resulted in the allowance of discounts in excess of the maximum allowable discount of 12 cents per net ton from the effective minimum f. o. b. mine price, as established by Order of the Director, dated June 19, 1940, in General Docket No. 12.

Notice is also hereby given that if it shall be determined that the Code Member has wilfully committed any one or

more of the violations alleged in the complaint, an order may be entered either revoking the membership of the Code Member in the Code or directing the Code Member to cease and desist from violating the Code and regulations made thereunder.

Dated: March 11, 1942.

[SEAL] DAN H. WHEELER, *Acting Director.*

[F. R. Doc. 42-2171; Filed, March 13, 1942; 10:07 a. m.]

[Docket No. B-34]

IN THE MATTER OF HIGH POINT COAL COMPANY, A CORPORATION, CODE MEMBER, DEFENDANT

ORDER AMENDING NOTICE OF AND ORDER FOR HEARING AND RESCHEDULING HEARING AND REDESIGNATING EXAMINER

A complaint dated September 15, 1941, pursuant to the provisions of sections 4 II (j) and 5 (b) of the Bituminous Coal Act of 1937, having been duly filed on September 16, 1941, by Bituminous Coal Producers Board for District No. 8, a District Board, complainant, and Notice of and Order for Hearing in respect to the subject matter of such complaint having been issued herein on December 8, 1941, and subsequently said complaint having been amended by Order, dated February 28, 1942, granting complainant's motion to amend dated February 2, 1942, and motion further to amend dated February 9, 1942; and

The above-entitled matter having been scheduled for hearing on January 26, 1942, at 10:00 a. m. at a hearing room of the Bituminous Coal Division at Room 214, United States Post Office, Knoxville, Tennessee, before Travis Williams or any other officer or officers of the Bituminous Coal Division duly designated for that purpose, pursuant to Order dated December 8, 1941, and subsequently postponed pursuant to Order dated January 21, 1942, to a date and place to be thereafter designated by an appropriate order; and

The Acting Director deeming it advisable that said Notice of and Order for Hearing dated December 8, 1941, should be amended and the place and date of such hearing should now be designated;

Now, therefore, it is ordered, That a hearing in the above-entitled matter be held on April 27, 1942, at 10:00 a. m. at a hearing room of the Bituminous Coal Division at the Federal Court Room, Knoxville, Tennessee.

It is further ordered, That Charles S. Mitchell be and he is hereby designated to preside at such hearing vice Travis Williams.

It is further ordered, That the Notice of and Order for Hearing dated December 8, 1941, in the above-entitled matter be and the same is hereby amended by adding after the last paragraph thereof the following paragraph:

That the said High Point Coal Company during the period March 3, 1941 to March 31, 1941, both dates inclusive, sold, offered for sale and delivered to numerous purchasers located in various market areas approximately 610.70 net tons of 2½" x 6" coal produced at its High Point No. 1 Mine, Mine Index No. 241, at prices ranging from $2.75 to $2.86 per net ton f. o. b. the mine whereas such coal is classified as Size Group No. 5 and is priced at $2.80 to $2.91 per net ton f. o. b. said mine in the Schedule of Effective Minimum Prices for District No. 8 for All Shipments Except Truck, resulting in sales, offers and deliveries of coal at prices below the effective minima therefor established by the Division, and violations of the Act and Code.

It is further ordered, That the Notice of and Order for Hearing dated December 8, 1941, in the above-entitled matter, shall, in all other respects, remain in full force and effect.

Dated: March 11, 1942.

[SEAL] DAN H. WHEELER, *Acting Director.*

[F. R. Doc. 42-2172; Filed, March 13, 1942; 10:08 a. m.]

[Docket No. B-149]

IN THE MATTER OF CENTRAL WEST COAL COMPANY, REGISTERED DISTRIBUTOR, REGISTRATION NO. 1512

NOTICE OF AND ORDER FOR HEARING

The Bituminous Coal Division (the "Division") finds it necessary in the proper administration of the Bituminous Coal Act of 1937 (the "Act") and the Bituminous Coal Code (the "Code") promulgated thereunder to determine

(a) Whether or not the Central West Coal Company, Registered Distributor, Registration No. 1512 (hereinafter sometimes referred to as the "Registered Distributor"), whose address is 145 North High Street, Columbus, Ohio, violated any provisions of the Act, the Code and orders or regulations of the Division including the Marketing Rules and Regulations, Rules and Regulations for the Registration of Distributors, and the Distributor's Agreement (the "Agreement") dated April 18, 1939, executed and filed by the Central West Coal Company pursuant to Order of the National Bituminous Coal Commission dated March 24, 1939 in General Docket No. 12, which was adopted as an Order of the Bituminous Coal Division on July 1, 1939;

(b) Whether or not the Central West Coal Company, during the month of February 1941, while acting as Sales Agent for J. B. Williamson, a code member, Hopedale, Ohio, sold to various purchasers approximately 4,043 tons of mine run coal at $1.90 per ton f. o. b. railroad cars at the Marion Mine tipple of J. B. Williamson, located at Parlett, Ohio, and invoiced this coal as coal produced by said J. B. Williamson, whereas in fact said coal was produced by the Waco Collieries, Millersburg, Ohio at its Ideal Mine, Mine Index No. 68, resulting in the registered distributor participating in transactions which were in violation of the Order of the Director dated October 9, 1940 in General Docket No. 19, Section 4 II (i) 8 of the Act and Part II (i) 8 of the Code, Rule 2 of Section XII and Rule 8 of Section XIII of the Marketing Rules and Regulations and in violation of paragraphs (c) and (e) of the Agreement;

(c) Whether or not the Central West Coal Company in the purchase of coal from certain code members for resale to various purchasers, as more fully set forth herein, participated in transactions which were in violation of Rule 1 of Section III of the Marketing Rules and Regulations by accepting and retaining discounts in excess of the maximum allowable discounts prescribed by the Division pursuant to the Order of the Director dated June 19, 1940 in General Docket No. 12, resulting in violations of paragraphs (a) and (e) of the Agreement:

(1) During the period January through July 1941 in the purchase and resale to various purchasers of approximately 51,385 tons of various sizes of coal produced by J. B. Williamson, a code member, Hopedale, Ohio, at his Marion Mine, Mine Index No. 92, Harrison County, Ohio, District No. 4, the registered distributor accepted and retained discounts in the amount of approximately $5,832.09 in excess of the maximum allowable discounts.

(2) During the period November 25, 1940, through July 31, 1941 in the purchase and resale to various purchasers of approximately 2935.4 tons of various sizes of coal produced by the Orchard Coal Company, a code member, Cambridge, Ohio, at its Orchard Mine, Mine Index No. 680, Guernsey County, Subdistrict No. 2, District No. 4, the registered distributor accepted and retained discounts of approximately $148.06 in excess of the maximum allowable discounts.

(3) On or about June 12, 1941 in the purchase and resale to various purchasers of approximately 97.45 tons of nut, pea and slack coal produced by the Kodak Coal Company, a code member, at its Musser Mine, Mine Index No. 2417, the registered distributor accepted and retained discounts of approximately $1.95 in excess of the maximum allowable discounts.

(d) Whether or not in the distribution of the coal described in paragraph (c) subparagraphs (1), (2) and (3) hereof, Central West Coal Company acted as Sales Agent on behalf of the several code members without there having been filed with the Statistical Bureau or Bureaus of the Division certified copies of all such sales agency contracts or certified copies of agreements modifying any such agency contracts, setting forth therein the basis for the Sales Agent retaining the amount of commissions which Central West Coal Company retained in said transactions, as required by Rules 4 (A) and 4 (B) and Rule 9 (a) of Section II of the Marketing Rules and Regulations, resulting in violations of said rules or any of them, and of paragraph (e) of the Agreement;

(e) Whether or not in the distribution of the coal described in paragraph (c) subparagraphs (1), (2) and (3) hereof, Central West Coal Company, acted as a Sales Agent on behalf of the several code members and retained commissions

in excess of the maximum allowable discounts which it could receive if it acted as a distributor, without there having been filed with the Division an application for permission to pay such commissions, or without having been granted such permission, resulting in violations of Rules 13 (A) and 13 (B) of Section II of the Marketing Rules and Regulations or either of said rules, and of paragraph (e) of the Agreement;

(f) Whether or not during the period January 2, 1941 through February 4, 1941, Central West Coal Company prepaid freight charges on 13 cars of ¾" x ⅜" washed and dried stoker coal produced by and shipped from the Tecumseh Coal Corporation, at its Tecumseh Mine, Mine Index No. 105, District No. 11, and sold to the Hoskins Coal and Dock Company, Chicago, Illinois, resulting in violations of Section 4 II (i) 3 of the Act, Part II (i) 3 of the Code, Rule 1 (J) of Section VII and Rule 3 of Section XIII of the Marketing Rules and Regulations and paragraphs (c) and (e) of the Agreement;

(g) Whether or not on or about January 11, 1941 Central West Coal Company purchased 1 ton of ½" x 0 slack coal at $1.80 less 12 cents and 49.2 tons of 1" x 1¼" lump coal at $2.35 less 20 cents, from the Dundee Coal Company, Sugar Creek, Ohio, a code member, produced at its Dundee Mine, Mine Index No. 1725, located in District No. 4, which coal was resold to the State Procurement Office, U. S. Treasury Department, Columbus, Ohio, of which total tonnage of 50.2 tons of coal 25.3 tons were consigned to a W. P. A. Project at 3rd and Park Avenue, Cleveland, Ohio, and 24.9 tons were consigned to a W. P. A. Project at Fulton and Dennison Avenue, Cleveland, Ohio, in which transactions the registered distributor physically handled such coal and resold it in less than carload lots, resulting in a violation of paragraph (d) of the Agreement;

(h) Whether or not during the period February 17, 1941 through June 18, 1941 Central West Coal Company sold approximately 485.15 tons of various sizes of coal produced by J. B. Williamson, Hopedale, Ohio, at his Marion Mine, Mine Index No. 92, to the Department of Highways, of the State of Ohio, pursuant to a guaranteed analysis, without filing with the Statistical Bureau or Bureaus of the Division and the District Board for the District in which the coal was produced a report of the analysis as used or a statement to the effect that a copy of such analysis has been properly filed with the Statistical Bureau or Bureaus of the Division and the District Board, resulting in violations of Rules 1, 2 and 5 of Section VIII of the Marketing Rules and Regulations and paragraph (e) of the Agreement;

(i) Whether or not in the transactions set forth in paragraph (h) above the Central West Coal Company allowed discounts to the purchaser in the amount of $158.96 because of alleged deficiencies in quality and preparation of the coal so sold, without filing with the Statistical Bureau or Bureaus of the Division and the District Board a copy of the analysis used as the basis for an adjustment of price, resulting in violations of Rule 1 of Section III and Rule 4 of Section VIII of the Marketing Rules and Regulations, and paragraphs (b) and (e) of the Agreement;

(j) Whether or not on or about August 6, 1941, Central West Coal Company entered a bid for the furnishing of approximately 9800 tons of 5" x 2" egg coal produced by the Starr-Jackson Mining Company, Starr, Ohio, at its Starr-Jackson Mine, Mine Index No. 130, Hocking County, Ohio, to the Quartermaster Corps, Chicago Quartermaster Depot, 1819 West Pershing Road, Chicago, Illinois, on the basis of a guaranteed analysis, without filing with the Statistical Bureau or Bureaus of the Division and the District Board for the District in which the coal was produced, a report of the analysis as used or a statement to the effect that a copy of such analysis has been properly filed with the Statistical Bureau or Bureaus of the Division and the District Board, resulting in violations of Rules 1, 2 and 5 of Section VIII of the Marketing Rules and Regulations and paragraph (e) of the Agreement;

(k) Whether or not on or about September 8, 1941, Central West Coal Company entered into a contract for the furnishing of the coal as set forth in paragraph (j) above, without filing a copy of this contract with the Statistical Bureau or Bureaus of the Division within fifteen (15) business days from the date of execution of such contract, resulting in violations of Rule 7 of Section VI of the Marketing Rules and Regulations and paragraph (e) of the Agreement;

(l) Whether or not during the period of November 13, 1940 through April 25, 1941, Central West Coal Company, acting as Sales Agent for the Kodak Coal Company, sold for rail shipment to various purchasers at Erie, Pennsylvania, approximately 3,877.5 tons of 2" nut, pea and slack coal, produced by the Kodak Coal Company, a code member, Clarion, Pennsylvania, at its Musser Mine, Mine Index No. 2417, District No. 1, whereas rail prices, temporary or final, had not been established for said producer until May 20, 1941 pursuant to a petition filed with the Division on or about April 3, 1941, resulting in the registered distributor participating in a violation of the Director's Order dated October 9, 1940 entered in General Docket No. 19 and in violation of paragraph (e) of the Agreement;

(m) Whether or not in the transactions described in paragraph (l) above, Central West Coal Company participated in a violation of Rule 9 (a) of Section II of the Marketing Rules and Regulations by accepting and retaining commissions of approximately $774, as sales agent for the Kodak Coal Company, although a certified copy of said contract of agency between the aforesaid parties was not on file with the Statistical Bureau for District No. 1, resulting in a violation of said rule, and of paragraph (e) of the Agreement;

(n) Whether or not during the period June 12 through July 31, 1941 Central West Coal Company acted as a sales agent on behalf of the Kodak Coal Company, Clarion County, Pennsylvania, in the sale to various purchasers of approximately 3,776 tons of 2" nut, pea and slack coal produced at the Musser Mine, Mine Index No. 2417, of the Kodak Coal Company, retaining commissions of approximately $367.12 in excess of the maximum discounts which it could receive if it purchased such coal as a distributor, without there having been filed with the Division an application for permission to pay such commissions and without having been granted such permission, resulting in violations of Rules 13 (A) and 13 (B) of Section II of the Marketing Rules and Regulations, or either of said rules and paragraph (e) of the Agreement;

(o) Whether or not the registration of Central West Coal Company should be revoked or suspended or other appropriate penalties should be imposed.

It is therefore ordered, That a hearing pursuant to § 304.14 of the Rules and Regulations for the Registration of Distributors, to determine whether or not the aforementioned Central West Coal Company, has committed violations in the respects heretofore described and whether or not the registration of said distributor should be revoked or suspended, or other appropriate penalties be imposed, be held on April 9, 1942, at 10 a. m., at a hearing room of the Bituminous Coal Division at Room 322, New Federal Building, Columbus, Ohio.

It is further ordered, That Travis Williams or any other officer or officers of the Bituminous Coal Division duly designated for that purpose shall preside at the hearing in such matter. The officer so designated to preside at such hearing is hereby authorized to conduct said hearing, to administer oaths and affirmations, examine witnesses, take evidence, to continue said hearing from time to time, and to such places as he may direct by announcement at said hearing or any adjourned hearing or by subsequent notice, and to prepare and submit proposed findings of fact and conclusions and the recommendation of an appropriate order in the premises, and to perform all other duties in connection therewith authorized by law.

Notice of such hearing is hereby given to said Central West Coal Company and to all persons and entities having an interest in such proceeding.

Notice is hereby given that answer setting forth the position of the aforementioned Central West Coal Company, with reference to the matters hereinbefore described, must be filed with the Bituminous Coal Division at its Washington Office or with any one of the Statistical Bureaus of the Division, within twenty (20) days after date of service hereof on the Central West Coal Company; and that failure to file an answer herein within such period, unless the presiding officer shall otherwise order, shall be deemed to be an admission by Central West Coal Company of the commission of the violations hereinbefore described and a consent to the entry of an appropriate order thereon.

All persons are hereby notified that the hearing in the above-entitled matter and orders entered therein may concern, in addition to the matters specifically alleged herein, other matters incidental and related thereto, whether raised by amendment, petition for intervention, or otherwise, and all persons are cautioned to be guided accordingly.

Dated: March 12, 1942.

[SEAL] DAN H. WHEELER, *Acting Director.*

[F. R. Doc. 42-2173; Filed, March 13, 1942; 10:08 a. m.]

[Docket No. A-1289, Part II]

PETITION OF DISTRICT BOARD NO. 2 FOR THE ESTABLISHMENT OF PRICE CLASSIFICATIONS AND MINIMUM PRICES FOR THE COALS OF THE CLINTON NO. 1 MINE (STRIP), MINE INDEX NO. 2318, OF THE UNION COLLIERIES COMPANY

MEMORANDUM OPINION AND ORDER GRANTING TEMPORARY RELIEF

An original petition (Docket No. A-1289) was filed with the Bituminous Coal Division by District Board No. 2, pursuant to section 4 II (d) of the Bituminous Coal Act of 1937, requesting the establishment of price classifications and minimum prices for certain coals produced in District No. 2 not theretofore classified and priced. The Clinton No. 1 Mine (strip), Mine Index No. 2318, of the Union Collieries Company, was included in that petition. District Board No. 3 filed a motion to sever that part of Docket No. A-1289 relating to the Clinton No. 1 Mine, and filed a petition of intervention in opposition to the relief requested for this mine and requested that no temporary relief be granted until after the holding of an informal conference. On March 2, 1942, an Order was entered herein severing that part of Docket No. A-1289 relating to the Clinton No. 1 Mine, setting the same up as Docket No. A-1289, Part II, and directing that a hearing be held in Docket No. A-1289, Part II, on March 31, 1942.

Pursuant to the provisions of § 301.106 of the 4 II (d) Rules, and after due notice to all interested persons, an informal conference was held on February 25, 1942, with respect to the prayer of the petitioner for the establishment of temporary price classifications and minimum prices for the coals produced at the Clinton No. 1 Mine, and with respect to the opposition of District Board No. 3 to the granting of such temporary relief. District Boards Nos. 2 and 3, and the Union Collieries Company participated in the informal conference. The record of the informal conference was submitted to the undersigned for consideration.

Information developed at the informal conference, discloses that no protest or objection to the granting of the relief requested in the petition has been made or lodged with District Board 2. Counsel for District Board 3 stated at the conference that the purpose of filing the petition of intervention was to enable District Board 3 to obtain information with respect to the propriety of granting the relief requested for the Clinton No. 1 Mine. At the close of the informal conference, District Board 3 stated that it had no objection to the granting of temporary relief, did not think that a hearing was necessary and would amend its request for a hearing to request that the matter be held in suspense pending such time as any producers in the future might manifest an objection. It was stated by counsel for District Board 3 that in view of the information developed at the informal conference the intervener would not press for a formal hearing.

It appears from the record and I find that the price classifications and corresponding minimum prices proposed by District Board 2 for the coals produced at the Clinton No. 1 Mine (strip), Mine Index No. 2318, of the Union Collieries Company, located in District 2, annexed hereto in the schedules marked "Supplement R" and "Supplement T" and made a part hereof, are expressed in the terms of the symbols of and in conformity with the effective minimum prices for analogous and comparable coals established by the Director in General Docket No. 15 and revision thereof and supplements thereto established in appropriate proceedings under the Act, and, are proper and conform to the standards of sections 4 II (a) and (b) of the Act.

It appears from the record that a reasonable showing of necessity has been made for the granting of temporary relief in the manner hereinafter set forth, and that injury to the Union Collieries Company is imminent unless temporary relief should be granted. It further appears that the granting of the temporary relief prayed for will not prejudice any of the competitors of the Union Collieries Company, or any code members generally.

It appears that the price classifications and minimum prices set forth in schedules marked "Supplement R" and "Supplement T," annexed hereto and made a part hereof, should be temporarily established pending final disposition of the original petition.

It is, therefore, ordered, That pending final disposition of the above-entitled matter, temporary relief is granted as follows: Commencing forthwith, the Schedules of Effective Minimum Prices for District No. 2 for All Shipments Except Truck and for Truck Shipments are supplemented to include the price classifications and minimum prices set forth in the schedules marked "Supplement R" and "Supplement T," annexed hereto and made a part hereof.

Nothing contained herein shall be deemed to constitute a ruling or expression of views concerning the final disposition of these proceedings or the nature of the relief which may hereafter be granted.

Dated: March 11, 1942.

[SEAL] DAN H. WHEELER, *Acting Director.*

[F. R. Doc. 42-2174; Filed, March 13, 1942; 10:08 a. m.]

[Docket No. A-1276]

PETITION OF W. M. CARDWELL FOR THE ESTABLISHMENT OF PRICE CLASSIFICATIONS AND MINIMUM PRICES FOR THE COALS OF THE CARDWELL MINE (MINE INDEX NO. 751) IN DISTRICT NO. 13 FOR ALL SHIPMENTS EXCEPT TRUCK

ORDER DISMISSING PETITION

An original petition, pursuant to section 4 II (d) of the Bituminous Coal Act of 1937, was duly filed with this Division by the above-named party on January 16, 1942, and requested the establishment of price classifications and minimum prices for the coals of Mine Index No. 751 in Size Groups 12, 13, 17, 18, and 24 for all shipments except truck. Identical relief had been requested for the coals of this mine in a petition in Docket A-1258 filed by District Board No. 13 on January 5, 1942, and by an Order dated January 21, 1942, in Docket A-1258, the relief sought therein for the coals of Mine Index No. 751 was granted.

By a letter dated February 10, 1942, the original petitioner was advised that relief, identical to the relief sought for the coals of Mine Index No. 751 in the above-entitled matter, had been granted by the Order of January 21, 1942, in Docket A-1258 on the petition of District Board 13, and inquiry was made as to whether original petitioner wished to withdraw the petition in the above-entitled matter. No reply to this communication has been received and it appears that the original petitioner has no further interest in this matter. Accordingly, it appears advisable that the original petition should be dismissed.

Now, therefore, it is ordered, That the original petition in the above-entitled matter be, and it hereby is, dismissed without prejudice.

Dated: March 11, 1942.

[SEAL] DAN H. WHEELER, *Acting Director.*

[F. R. Doc. 42-2175; Filed, March 13, 1942; 10:08 a. m.]

CIVIL AERONAUTICS BOARD.

[Docket No. SA-59]

IN THE MATTER OF INVESTIGATION OF ACCIDENT INVOLVING AIRCRAFT OF UNITED STATES REGISTRY NC 21788, WHICH OCCURRED NEAR DETROIT, MICHIGAN, ON MARCH 2, 1942

NOTICE OF HEARING

Notice is hereby given, pursuant to the Civil Aeronautics Act of 1938, as amended, particularly section 702 of said Act, in the above-entitled proceeding, that hearing is hereby assigned to be held on March 17, 1942, at 10:00 a. m. (E. W. T.) in the Tropical Room, Detroit-Leland Hotel, Detroit, Michigan.

Dated, Washington, D. C., March 12, 1942.

[SEAL] D. W. MARKHAM, *Examiner.*

[F. R. Doc. 42-2187; Filed, March 13, 1942; 11:42 a. m.]

FEDERAL COMMUNICATIONS COMMISSION.

[Docket No. 6263]

IN RE APPLICATION OF HOOSIER BROADCASTING CO.

NOTICE OF HEARING

In re application of Fred C. Morgan, Harrison Eiteljorg, Roger A. Beane d/b as Hoosier Broadcasting Company (New), dated August 13, 1941, for construction permit; class of service, broadcast; class of station, broadcast; location, Indianapolis, Indiana; operating assignment specified: Frequency, 810 kc.; power, 250 watts; hours of operation, daytime.

You are hereby notified that the Commission has examined the above described application and has designated the matter for hearing for the following reasons:

1. To determine the character of the proposed program service.
2. To determine whether the operation of the proposed station, on the frequency 810 kilocycles would be an efficient use of that channel and consistent with good allocation practice.
3. To determine whether there are other assignments available which would permit the rendition of a local service by the applicant to Indianapolis, Indiana, and the areas contiguous thereto, on an unlimited time basis.
4. To determine whether granting of this application would tend toward a fair, efficient and equitable distribution of radio service as contemplated by section 307 (b) of the Communications Act of 1934, as amended.
5. To determine whether the proposed construction involves the use of any critical materials.
6. To determine the areas and populations which would receive primary service from the proposed station, and what broadcast service is already available to such areas and populations.
7. To determine whether the granting of the application would be consistent with the policy announced by the Commission with respect to authorizations involving the use of critical materials (see Commission's Memorandum Opinion, dated February 23, 1942, Mimeograph No. 58106).
8. To determine whether in view of the facts adduced under the foregoing issues public interest, convenience and necessity would be served through the granting of this application.

The application involved herein will not be granted by the Commission unless the issues listed above are determined in favor of the applicant on the basis of a record duly and properly made by means of a formal hearing.

The applicant is hereby given the opportunity to obtain a hearing on such issues by filing a written appearance in accordance with the provisions of § 1.382 (b) of the Commission's Rules of Practice and Procedure. Persons other than the applicant who desire to be heard must file a petition to intervene in accordance with the provisions of § 1.102 of the Commission's Rules of Practice and Procedure.

The applicant's address is as follows:

Fred C. Morgan, Harrison Eiteljorg, Roger A. Beane d/b as Hoosier Broadcasting Company, Att: Roger A. Beane, 19 West 38th Street, Indianapolis, Indiana.

Dated: March 11, 1942.
By the Commission.

[SEAL] T. J. SLOWIE, *Secretary.*

[F.R. Doc. 42-2178; Filed, March 13, 1942; 10:48 a. m.]

[Docket No. 6264]

IN RE APPLICATION OF WKAL, INC.

NOTICE OF HEARING

In re application of WKAL, Incorporated (New), dated July 21, 1941, for construction permit; class of service, broadcast; class of station, broadcast; location, Kalamazoo, Michigan; operating assignment specified: Frequency, 1,230 kc.; power, 250 watts; hours of operation, unlimited.

You are hereby notified that the Commission has examined the above described application and has designated the matter for hearing for the following reasons:

1. To determine whether the proposed station would provide primary service to the metropolitan district of Kalamazoo, Michigan, as contemplated by the Standards of Good Engineering Practice.
2. To determine whether the proposed construction involves the use of any critical materials.
3. To determine the areas and populations which would receive primary service from the proposed station, and what broadcast service is already available to such areas and population.
4. To determine whether the granting of the application would be consistent with the policy announced by the Commission with respect to authorizations involving the use of critical materials (see Commission's Memorandum Opinion dated February 23, 1942, Mimeograph No. 58106).
5. To determine whether, in view of the facts adduced under the foregoing issues, public interest, convenience and necessity would be served by the granting of this application.

The application involved herein will not be granted by the Commission unless the issues listed above are determined in favor of the applicant on the basis of a record duly and properly made by means of a formal hearing.

The applicant is hereby given the opportunity to obtain a hearing on such issues by filing a written appearance in accordance with the provisions of § 1.382 (b) of the Commission's Rules of Practice and Procedure. Persons other than the applicant who desire to be heard must file a petition to intervene in accordance with the provisions of § 1.102 of the Commission's Rules of Practice and Procedure.

The applicant's address is as follows:

WKAL, Incorporated, Att: Marvin J. Schaberg, P. O. Box 775, Kalamazoo, Michigan.

Dated at Washington, D. C., March 11, 1942.
By the Commission.

[SEAL] T. J. SLOWIE, *Secretary.*

[F. R. Doc. 42-2179; Filed, March 13, 1942; 10:48 a. m.]

FEDERAL POWER COMMISSION.

[Project No. 970]

IN THE MATTER OF GLACIER SILVER LEAD MINING COMPANY

NOTICE OF APPLICATION

MARCH 12, 1942.

Public notice is hereby given, pursuant to the provisions of the Federal Power Act (16 U.S.C. 791-825r) that Glacier Silver Lead Mining Company, of Libby, Montana, licensee for Project No. 970, has filed an application for surrender of license for the project, situated on Granite Creek, in Lincoln County, Montana. Any protest against the approval of this application or request for hearing thereon, with the reasons for such protest or request and the name and address of the party or parties so protesting or requesting, should be submitted before April 11, 1942, to the Federal Power Commission, at Washington, D. C.

[SEAL] LEON M. FUQUAY, *Secretary.*

[F. R. Doc. 42-2176; Filed, March 13, 1942; 10:13 a. m.]

FEDERAL TRADE COMMISSION.

[Docket No. 4725]

IN THE MATTER OF KIMBLE GLASS COMPANY, A CORPORATION

COMPLAINT

The Federal Trade Commission having reason to believe that the party respondent named in the caption hereof, and hereinafter more particularly designated and described, since June 19, 1936, has violated and is now violating the provisions of section 2 (a) of the Clayton Act as amended by the Robinson-Patman Act, approved June 19, 1936 (U.S.C. Title 15, Section 13), hereby issues its complaint, stating its charges with respect thereto as follows:

PARAGRAPH 1. Respondent, Kimble Glass Company, is a corporation organized and existing under and by virtue of the laws of the State of Illinois, and has its office and principal place of business located in Vineland, New Jersey.

PAR. 2. Respondent is now, and has been since June 19, 1936, engaged in the business of manufacturing, distributing and selling glass tubing and test and con-

trol apparatus for the dairy industry. Respondent is the larger of two manufacturers of test and control dairy glassware doing business in the United States. Its sole competitor is the Wagner Glass Company with offices at 695 East 132d Street, New York, New York, which likewise distributes and sells in interstate commerce. In the course and conduct of its said business, respondent sells the aforesaid apparatus to purchasers located in the various states of the United States and in the District of Columbia and causes substantial quantities of said apparatus, when sold, to be shipped and transported from its place of business in the State of New Jersey across state lines to the respective purchasers thereof in each of the several states of the United States and in the District of Columbia.

Respondent employs no salesmen. It has no branch offices, nor does it maintain warehouses other than those located in Vineland, New Jersey. All orders for its dairy glassware are forwarded to it by its customers through the mail. Its method of shipping its products is the same to all customers, whether large or small. It will make shipments direct to its customers or to any of the several branches named by them, as well as drop shipments, whenever directed.

PAR. 3. Among those purchasers to whom respondent sells its merchandise are Cherry-Burrell Corporation, Chicago, Illinois; Creamery Package Manufacturing Company, Chicago, Illinois; Meyer-Blanke Company, St. Louis, Missouri; and Kennedy & Parsons Company, Omaha, Nebraska. The Creamery Package Manufacturing Company sells direct to consumers through its direct selling branches located in some eighteen cities throughout the United States. The Cherry-Burrell Corporation likewise maintains offices throughout the United States in some eighteen cities. Meyer-Blanke Company has seventeen offices, while Kennedy & Parsons Company has three branches. These buyers of respondent's merchandise are competitively engaged in commerce as commerce is defined in the Clayton Act with numerous wholesalers of respondent's merchandise.

PAR. 4. Respondent enters into contracts with the four mentioned buyers in which these buyers are designated as distributors. These contracts provide in part as follows:

Distributor is to stock at least 250 gross of Test Bottles and Pipettes and shall advise us semiannually, in writing, that this amount of stock is being maintained. When this condition is met, the Seller agrees to furnish articles listed in Part I of Seller's catalog at the following discounts:

	Percent
Orders less than 25 gross	25
25 to 49 gross	25–5
50 to 99 gross	25–10
100 gross or more	25–15

The Distributor agrees to wholesaler's plan of distribution attached which is a part of this agreement. The Seller reserves the right to ask for and receive the individual and total of all sales made by the Distributor to any wholesaler.

Wholesalers and large consumers buy direct from respondent and from distributors at prices reflecting the following discounts:

	Percent
Less than 1 gross	10
1 to 4 gross	15
5 to 9 gross	20
10 to 24 gross	25

Distributors accept blanket orders for 25 gross from large buyers and permit withdrawals as desired. Respondent likewise accepts blanket orders at maximum discounts from its distributors and permits the buyers to designate numerous shipments to various buyers to apply against the blanket order.

PAR. 5. Respondent interprets the contracts with the four mentioned distributors to mean the aggregate stocking by all of the various branches of such distributors, and it appears that none of these branches carries as much as 100 gross and several carry less than 12 gross each. The average size of the orders submitted by some of the favored purchasers is less than the average size of the orders submitted by other purchasers who are sold at no greater discounts than 25%. By the foregoing acts and practices the respondent discriminates in price between its small and large customers. The former can never secure better than a 25% discount, while the latter may obtain this discount regardless of the size of the individual order and greater discounts for larger orders. To illustrate: The respondent, Kimble Glass Company, sold cream test bottles, article 2085, at approximately the same time to Jensen Machinery and Dairy Supply Co., Inc., of Wichita, Kansas, and to Meyer-Blanke Company of St. Louis, Missouri. Drop shipments of less than 5 gross each were made for each buyer. The two named buyers compete for business of the same consumers. While the Wichita Company was granted a discount of 25%, the St. Louis Company received an additional 15%.

PAR. 6. The effect of the discriminations in price set forth herein has been and may be substantially to lessen competition between respondent and its sole competitor and to tend to create a monopoly in respondent in the sale of the merchandise referred to herein, and the effect has been and may be to tend to create a monopoly in such customers who are not charged the higher prices and to injure competition with such customers of respondent who receive the benefit of such discrimination.

PAR. 7. The aforesaid acts and practices of respondent constitute a violation of the provisions of section 2 (a) of the Clayton Act as amended by the Robinson-Patman Act, approved June 19, 1936 (U.S.C., Title 15, Section 13).

Wherefore, the premises considered, the Federal Trade Commission on this 9th day of March, A. D. 1942, here issues its complaint against said respondent.

NOTICE

Notice is hereby given you, Kimble Glass Company, respondent herein, that the 17th day of April, A. D. 1942, at 2 o'clock in the afternoon, is hereby fixed as the time, and the offices of the Federal Trade Commission in the City of Washington, D. C., as the place, when and where a hearing will be had on the charges set forth in this complaint, at which time and place you will have the right, under said Act, to appear and show cause why an order should not be entered by said Commission requiring you to cease and desist from the violations of the law charged in the complaint.

You are notified and required, on or before the twentieth day after service upon you of this complaint, to file with the Commission an answer to the complaint. If answer is filed and if your appearance at the place and on the date above stated be not required, due notice to that effect will be given you. The Rules of Practice adopted by the Commission with respect to answers or failure to appear or answer (Rule IX) provide as follows:

In case of desire to contest the proceeding the respondent shall, within twenty (20) days from the service of the complaint, file with the Commission an answer to the complaint. Such answer shall contain a concise statement of the facts which constitute the ground of defense. Respondent shall specifically admit or deny or explain each of the facts alleged in the complaint, unless respondent is without knowledge, in which case respondent shall so state.

* * * * *

Failure of the respondent to file answer within the time above provided and failure to appear at the time and place fixed for hearing shall be deemed to authorize the Commission, without further notice to respondent, to proceed in regular course on the charges set forth in the complaint.

If respondent desires to waive hearing on the allegations of fact set forth in the complaint and not to contest the facts, the answer may consist of a statement that respondent admits all the material allegations of fact charged in the complaint to be true. Respondent by such answer shall be deemed to have waived a hearing on the allegations of fact set forth in said complaint and to have authorized the Commission, without further evidence, or other intervening procedure to find such facts to be true, and if in the judgment of the Commission such facts admitted constitute a violation of law or laws as charged in the complaint, to make and serve findings as to the facts and an order to cease and desist from such violations. Upon application in writing made contemporaneously with the filing of such answer, the respondent, in the discretion of the Commission, may be heard on brief, in oral argument, or both, solely on the question as to whether the facts so admitted constitute the violation or violations of law charged in the complaint.

In witness whereof, the Federal Trade Commission has caused this, its complaint, to be signed by its Secretary, and

its official seal to be hereto affixed, at Washington, D. C., this 9th day of March, A. D. 1942.

By the Commission.

[SEAL] OTIS B. JOHNSON, *Secretary.*

[F. R. Doc. 42-2184; Filed, March 13, 1942; 11:33 a. m.]

FOREIGN-TRADE ZONES BOARD.

[Order No. 7]

IN THE MATTER OF THE REQUEST OF THE SECRETARY OF WAR TO SUSPEND FOREIGN-TRADE ZONE OPERATIONS IN A CERTAIN PART OF FOREIGN-TRADE ZONE NO. 1 AT STAPLETON, STATEN ISLAND, NEW YORK, DURING THE PERIOD OF ARMY OCCUPANCY

Pursuant to the authority contained in the Act of June 18, 1934 (48 Stat. 998; 19 U.S.C. 81-a-81-u), the Foreign-Trade Zones Board, at a meeting held February 23, 1942, adopted the following order which is promulgated for the information and guidance of all concerned:

The War Department having decided that a military necessity exists for the immediate occupancy of Piers Nos. 12, 13, 14, 15 and 16, and adjacent slips and land comprising a part of Foreign-Trade Zone No. 1, at Stapleton, Staten Island, New York, the Foreign-Trade Zones Board hereby approves the request of the Secretary of War to suspend foreign-trade zone operations within the said area and on the said facilities during the period of military occupancy. Further, the Board agrees to suspend, during army use, all requirements for zone construction and improvements in the area and on the facilities affected.

The Board orders the City of New York, the Grantee, to maintain an office at the zone site and authorizes the continuance of operations now carried on in connection with the storing, sampling, and sale of Sumatra tobacco or any other foreign-trade zone activity which is adaptable to the area which has been exempted from the property acquired by the War Department.

The Grantee is further ordered to segregate this area and the structures thereon to comply with requirements of the Collector of Customs of the Port of New York.

The Grantee is authorized and directed to obtain suitable sites within the limits of the Port of New York wherein zone operations are to be carried on during the period of the present emergency, and upon approval of such sites by the Board, any area so approved will be deemed to be within Foreign-Trade Zone No. 1.

This order is effective February 23, 1942.

[SEAL] JESSE H. JONES, *Secretary of Commerce, Chairman, Foreign-Trade Zones Board.*

[F. R. Doc. 42-2181; Filed, March 13, 1942; 10:05 a. m.]