THE NATIONAL ARCHIVES
LITTERA SCRIPTA MANET
FEDERAL REGISTER
OF THE UNITED STATES 1934

VOLUME 7 NUMBER 239

Washington, Tuesday, December 8, 1942

The President

EXECUTIVE ORDER 9279

PROVIDING FOR THE MOST EFFECTIVE MOBILIZATION AND UTILIZATION OF THE NATIONAL MANPOWER AND TRANSFERRING THE SELECTIVE SERVICE SYSTEM TO THE WAR MANPOWER COMMISSION

In order to promote the most effective mobilization and utilization of the national manpower and to eliminate so far as possible waste of manpower due to disruptive recruitment and undue migration of workers, and by virtue of the authority vested in me by the Constitution and Statutes, including the First War Powers Act, 1941, and the Selective Training and Service Act of 1940, as amended, as President of the United States, and as Commander in Chief of the Army and the Navy, it is hereby ordered as follows:

1. The War Manpower Commission (established by Section 1 of Executive Order No. 9139, dated April 18, 1942 [1]) shall consist of a Chairman appointed by the President and one representative, designated subject to the approval of the Chairman, of each of the following departments and agencies: The Department of War, the Department of the Navy, the Department of Agriculture, the Department of Labor, the Federal Security Agency, the War Production Board, the United States Civil Service Commission, the National Housing Agency, and such other executive departments and agencies as the President shall determine; and a joint representative of the War Shipping Administration and the Office of Defense Transportation, designated by the Chairman of the War Manpower Commission (hereinafter referred to as the Chairman).

2. (a) The Selective Service System created and established for the purpose of carrying out the provisions of the Selective Training and Service Act of 1940, as amended, and all of its functions, powers, duties, personnel (including the Director of Selective Service), records, property, and funds (including all unexpended balances of appropriations, allocations, or other funds available for the administration of said Act, as amended) are transferred to the War Manpower Commission in the Office for Emergency Management of the Executive Office of the President, and shall be administered under the supervision and direction of the Chairman. The local boards and appeal boards of the Selective Service System shall, subject to the supervision and direction of the Chairman, continue to exercise the functions, powers, and duties vested in them by the Selective Training and Service Act of 1940, as amended.

(b) The functions, powers, and duties of the Director of Selective Service, including authority delegated to him by the President under the provisions of the Selective Training and Service Act of 1940, as amended, are transferred to the Chairman and may be exercised through the Director of Selective Service and such other officers, agents, and persons and in such manner as the Chairman may determine.

(c) The Chief of Finance, United States Army, shall act as the fiscal, disbursing, and accounting agent of the Chairman in carrying out the provisions of the Selective Training and Service Act of 1940, as amended.

3. The Secretary of War and the Secretary of the Navy shall, after consultation with the Chairman, determine the number of men required to be selected each month in order to fulfill the total respective requirements of the Army and Navy as approved by the President. The Chairman shall furnish the required number of men through the Selective Service System.

4. After the effective date of this Order no male person who has attained the eighteenth anniversary and has not attained the thirty-eighth anniversary of the day of his birth shall be inducted into the enlisted personnel of the armed forces (including reserve components), except, under provisions of the Selective Training and Service Act of 1940, as amended; but any such person who has, on or before the effective date of this Order, submitted a bona fide application for voluntary enlistment may be enlisted within ten days after said date.

5. Insofar as the effective prosecution of the war requires it, the Chairman shall take all lawful and appropriate steps to assure that (a) all hiring, rehiring, solicitation, and recruitment of workers in or

[1] 7 F.R. 2919.

(Continued on next page)

CONTENTS

THE PRESIDENT

Page

EXECUTIVE ORDERS:
Food program, delegation of authority to Secretary of Agriculture 10179
Puerto Rico Reconstruction Administration, appointment of Benjamin W. Thoron as Administrator 10181
War Manpower Commission, transfer of Selective Service System to, etc 10177

REGULATIONS AND NOTICES

BITUMINOUS COAL DIVISION:
Hearings, etc.:
Albuquerque and Cerrillos Coal Co 10238
Burkhardt Consolidated Coal Co 10240
District Board 9 10237
Hillman Coal and Coke Co 10238
Pitcher, J. O., Coal Co 10240
Semet-Solvay Co 10238
Minimum price schedules amended:
District 1 10205
District 2 (2 documents) 10206, 10207

COMMODITY CREDIT CORPORATION:
Cotton loans, 1942:
Certificate of indemnity, form instructions 10181
Increase in rates 10182
Loans on farm-stored cotton (2 documents) 10183
Pooling of producer's notes 10182

FEDERAL COMMUNICATIONS COMMISSION:
Request to all radio station licensees for information 10240

FOOD AND DRUG ADMINISTRATION:
Canned peas, order amending definition and standards of identity (Correction) 10204

FOREIGN AND DOMESTIC COMMERCE BUREAU:
China Trade Act Regulations, annual report amendments 10204

INTERSTATE COMMERCE COMMISSION:
Pipe line carriers, destruction of records 10235

NATIONAL WAR LABOR BOARD:
General Orders:
Navy Department civilian employees, wage and salary adjustments 10204

(Continued on next page)

FEDERAL REGISTER

Published daily, except Sundays, Mondays, and days following legal holidays by the Division of the Federal Register, The National Archives, pursuant to the authority contained in the Federal Register Act, approved July 26, 1935 (49 Stat. 500), under regulations prescribed by the Administrative Committee, approved by the President.

The Administrative Committee consists of the Archivist or Acting Archivist, an officer of the Department of Justice designated by the Attorney General, and the Public Printer or Acting Public Printer.

The daily issue of the FEDERAL REGISTER will be furnished by mail to subscribers, free of postage, for $1.25 per month or $12.50 per year, payable in advance. Remit money order payable to the Superintendent of Documents directly to the Government Printing Office, Washington, D. C. The charge for single copies (minimum, 10¢) varies in proportion to the size of the issue.

There are no restrictions on the republication of material appearing in the FEDERAL REGISTER.

Telephone information: DIstrict 0525.

CONTENTS—Continued

NATIONAL WAR LABOR BOARD—Continued.
General Orders—Continued. Page
Office of Price Administration local board clerks, area pay scales 10204
OFFICE OF DEFENSE TRANSPORTATION:
Bay City and Alpena, Mich., coordination of bus operation 10241
OFFICE OF PRICE ADMINISTRATION:
Adjustments, etc.:
Baker-Whiteley Coal Co 10243
Bitco, Inc 10241
Cohen, Benjamin, and Samuel La Pouche 10242
Essex Rubber Co 10242
Game Makers, Inc 10241
LaPierre, Aram J 10241
Lilly, Eli, and Co 10231
Poythress, Wm. P., and Co., Inc 10232
Alaska (MPR 194, Am. 7) 10231
Apple butter (MPR 232, Am. 2) 10226
Automobiles, new passenger (Ration Order 2A, Am. 20) 10228
Defense-rental area (Corr. to MRR 57) 10225
Fertilizer, mixed, etc. (MPR 135, Am. 4) 10229
Food and food products (MPR 238, Am. 4) 10227
Fruit preserves, jams and jellies (MPR 226, Am. 3) 10226
Fuel, bunker (MPR 189, Am. 3) 10225
Gears, etc. (RPS 105, revocation) 10231
Hops (MPR 279) 10227
Machines and parts and machinery services:
(MPR 136, Am. 61) 10230
(MPR 136, Am. 62) 10230
Puerto Rico (MPR 183, Am. 12) 10225
Services (Supp. Reg. 14, Am. 74) 10231
Tobacco, burley (MPR 283) 10224
Typewriters, new and used (Rev. Ration Order 4) 10230
Virgin Islands (MPR 201, Am. 3) 10231

CONTENTS—Continued

POST OFFICE DEPARTMENT: Page
Violation of private express statutes 10237
SECURITIES AND EXCHANGE COMMISSION:
Hearings, etc.:
Associated Gas and Electric Corp., et al 10243
Engineers Public Service Co., et al 10246
Lone Star Gas Corp 10244
North American Light and Power Co., and The North American Co 10245
North Shore Gas Co., et al 10245
Oklahoma Power and Water Co., and The Middle West Corp 10244
Transamerica Corp 10243
VETERANS' ADMINISTRATION:
Soldiers' and Sailors' Civil Relief Act, 1942 amendments 10232
WAR DEPARTMENT:
Procurement regulations, amendments 10184
WAR PRODUCTION BOARD:
Chains and chain parts (L-201) 10215
Cocoa (M-145) 10213
Construction (L-41) 10211
Ethyl alcohol and related compounds (M-30) 10208
Fountain pens, etc. (L-227) 10222
Glass container and closure simplification (L-103, Schedule E) 10218
Iron and steel conservation (M-126, Am. 1) 10218
Laboratory equipment (L-144) 10214
Lithium ore (M-253) 10216
Pencils, wood cased (L-113, revocation) 10222
Phthalic alkyd resins (M-139) 10220
Refrigerator, domestic mechanical (L-5-d) 10209
Sulfuric acid (M-257) 10217

for work in any establishment, plant, facility, occupation, or area designated by the Chairman as subject to the provisions of this section shall be conducted solely through the United States Employment Service or in accordance with such arrangements as the Chairman may approve; and (b) no employer shall retain in his employ any worker whose services are more urgently needed in any establishment, plant, facility, occupation, or area designated as more essential by the Chairman pursuant to this section.

6. The Secretary of War and the Secretary of the Navy shall take such steps as may be necessary to assure that all training programs for the armed forces (including their reserve components) and the Women's Army Auxiliary Corps, which are carried on in non-Federal educational institutions, conform with such policies or regulations as the Chairman, after consultation with the Secretary of War and the Secretary of the Navy, prescribes as necessary to insure the efficient utilization of the Nation's educational facilities and personnel for the effective prosecution of the war.

7. The Chairman shall (a) issue such policies, rules, regulations, and general or special orders as he deems necessary to carry out the provisions of this Order, (b) take steps to prevent and relieve gross inequities or undue hardships arising from the exercise of the provisions of Section 5 of this Order insofar as he finds so doing will not interfere with the effective prosecution of the war, and (c) establish such procedures (including appeals) as are necessary to assure a hearing to any person claiming that any action, taken by any local or regional agent or agency of the War Manpower Commission pursuant to Section 5 of this Order and said Executive Order No. 9139, is unfair or unreasonable as applied to him.

8. (a) The Chairman may perform the functions and duties and exercise the powers, authority, and discretion conferred upon him by this Order or any other Order of the President through such officers, agents, and persons and in such manner as he shall determine.

(b) The Chairman may avail himself of the services and facilities of such Executive departments and agencies as he determines may be of assistance in carrying out the provisions of this Order. He may accept the services and facilities of State and local agencies.

9. Subject to appeal to the President or to such agent or agency as the President may designate, each Executive department and agency shall so utilize its facilities, services, and personnel and take such action, under authority vested in it by law, as the Chairman, after consultation with such department or agency, determines necessary to promote compliance with the provisions of this Order or of policies, directives, or regulations prescribed under said Executive Order No. 9139.

10. The Chairman shall appoint a Management-Labor Policy Committee to be selected from the fields of labor, agriculture, and industrial management, and shall consult with the members thereof in carrying out his responsibilities. The Chairman may appoint such other advisory committees composed of representatives of governmental or private groups or both as he deems appropriate.

11. The Chairman shall be ex officio an additional member of the Economic Stabilization Board established by Executive Order No. 9250, dated October 3, 1942.[2]

12. All prior Executive Orders, insofar as they are in conflict herewith, are amended accordingly. All prior regulations, rulings, and other directives relating to the Selective Service System shall remain in effect, except insofar as they are in conflict with this Order or are hereafter amended by regulations, rulings, or other directives issued by or under the direction of the Chairman.

13. This Order shall take effect immediately and shall continue in force and effect until the termination of Title I of the First War Powers Act, 1941.

FRANKLIN D ROOSEVELT

THE WHITE HOUSE,
December 5, 1942.

[F. R. Doc. 42-12939; Filed, December 7, 1942; 11:01 a. m.]

[2] 7 F. R. 7871.

EXECUTIVE ORDER 9280

DELEGATING AUTHORITY WITH RESPECT TO THE NATION'S FOOD PROGRAM

By virtue of the authority vested in me by the Constitution and the statutes of the United States, as President of the United States and Commander in Chief of the Army and Navy, and in order to assure an adequate supply and efficient distribution of food to meet war and essential civilian needs, it is hereby ordered as follows:

1. The Secretary of Agriculture (hereinafter referred to as the "Secretary") is authorized and directed to assume full responsibility for and control over the Nation's food program. In exercising such authority, he shall:

a. Ascertain and determine the direct and indirect military, other governmental, civilian, and foreign requirements for food, both for human and animal consumption and for industrial uses.

b. Formulate and carry out a program designed to furnish a supply of food adequate to meet such requirements, including the allocation of the agricultural productive resources of the Nation for this purpose.

c. Assign food priorities and make allocations of food for human and animal consumption to governmental agencies and for private account, for direct and indirect military, other governmental, civilian, and foreign needs.

d. Take all appropriate steps to insure the efficient and proper distribution of the available supply of food.

e. Purchase and procure food for such Federal agencies, and to such extent, as he shall determine necessary or desirable, and promulgate policies to govern the purchase and procurement of food by all other Federal agencies: *Provided,* That nothing in this subsection shall limit the authority of the armed forces to purchase or procure food outside the United States or in any theater of war as such purchase and procurement shall be required by military or naval operations, or the authority of any other authorized agency to purchase or procure food outside the United States for rehabilitation or relief purposes abroad. Existing methods for the purchase and procurement of food by other Federal agencies shall continue until otherwise determined by the Secretary pursuant to this Executive Order.

2. The Secretary shall recommend to the Chairman of the War Production Board the amounts and types of non-food materials, supplies, and equipment necessary for carrying out the food program. Following consideration of these recommendations, the Chairman of the War Production Board shall allocate stated amounts of non-food materials, supplies, and equipment to the Secretary for carrying out the food program; and the War Production Board, through its priorities and allocation powers, shall direct the use of such materials, supplies, and equipment for such specific purposes as the Secretary may determine.

3. Whenever the available supply of any food is insufficient to meet both food and industrial needs, the Chairman of the War Production Board and the Secretary shall jointly determine the division to be made of the available supply of such food. In the event of any difference of view between the Chairman of the War Production Board and the Secretary, such difference shall be submitted for final determination to the President or to such agent or agency as the President may designate.

4. The Secretary, after determining the need and the amount of food available for civilian rationing, shall, through the Office of Price Administration, exercise the priorities and allocation powers conferred upon him by this Executive Order for civilian rationing, with respect to (a) the sale, transfer, or other disposition of food by any person who sells at retail to any person, and (b) the sale, transfer, or other disposition of food by any person to an ultimate consumer, as is currently provided for in War Production Board Directive No. 1, dated January 24, 1942,[1] and existing supplements thereto; and with respect to (c) the sale, transfer, or other disposition of food by any person at such other levels of distribution as he may determine; and in the administration or enforcement of any such priorities or allocation authority for civilian rationing, the Office of Price Administration, subject to the provisions of this Executive Order, is hereby authorized to exercise all the functions, duties, powers, authority, or discretion conferred upon the Price Administrator by Section 3 of Executive Order 9125 of April 7, 1942.[2] The Secretary, before determining the time, extent, and other conditions of civilian rationing, shall consult with the Price Administrator.

5. In discharging his responsibility under this Executive Order with respect to the exportation of food, the Secretary shall collaborate with the other agencies concerned with the foreign aspects of the food program in the determination of plans, policies and procedures for the feeding of the peoples in foreign countries and the production and stockpiling of food for use abroad. With respect to the issuance of the directives for the importation of food heretofore issued to the Board of Economic Warfare by the Chairman of the War Production Board under Executive Order No. 9128 of April 13, 1942,[3] the Secretary shall issue those directives which relate to the importation of food for human and animal consumption, and the Chairman of the War Production Board and the Secretary shall jointly issue those directives which relate to the importation of food for industrial uses. The Chairman of the War Production Board shall continue to issue all other directives which relate to the importation of materials, supplies, and equipment required for the war production program and the civilian economy. Schedules of priorities heretofore prepared and issued by the Chairman of the War Production Board under Executive Order 9054 of February 7, 1942[4] for the importation by overseas transportation of food for human or animal consumption and for industrial uses shall be similarly issued, and transmitted to the Administrator of War Shipping Administration for his guidance.

6. In discharging his responsibility under this Executive Order, the Secretary shall, in the event of a shortage of domestic transportation service, and after consultation with the War Production Board for the purpose of adjusting the relative demands for the movement of food for human or animal consumption and the movement of commodities for other purposes, prepare schedules of priorities for the domestic movement of food, which the Office of Defense Transportation shall take into consideration in determining traffic movements.

7. (a) To advise and consult with him in carrying out the provisions of this Executive Order, the Secretary shall appoint a committee composed of representatives of the State, War, and Navy Departments, the Office of Lend-Lease Administration, the Board of Economic Warfare, the War Production Board, and such other agencies as the Secretary may determine to be concerned with the food program. The Food Requirements Committee of the War Production Board established by the Chairman of the War Production Board by memorandum dated June 4, 1942 is abolished effective as of the date of appointment of said advisory committee. The Secretary shall receive from the members of such advisory committee estimates of food requirements, and consult with such committee prior to the making of food allocations under Section 1 (c) of this Executive Order. Such committee shall perform such other functions in connection with the food program as the Secretary may determine. The Secretary may, in his discretion, appoint such other advisory committees composed of representatives of governmental or private groups interested in the food program as he deems appropriate.

b. Section 1 of Executive Order No. 9024, dated January 16, 1942,[5] is amended to provide that the Secretary shall be a member of the War Production Board.

8. The Secretary, in carrying out the responsibilities imposed on him by this

[1] 7 F.R. 562.
[2] 7 F.R. 2719.
[3] 7 F.R. 2809.
[4] 7 F.R. 837.
[5] 7 F.R. 329.

Executive Order, may, subject to the provisions of this Executive Order, exercise the following powers in addition to the powers heretofore vested in him.

a. The power conferred upon the Department of Agriculture with respect to contracts by Executive Order No. 9023 of January 14, 1942.[5]

b. The power conferred upon the President by Title III of the Second War Powers Act, 1942, insofar as it relates to priorities and allocations of (1) all food for human or animal consumption or for other use in connection with the food program, but excluding that food which has been determined to be available to the War Production Board for industrial purposes pursuant to Section 3 of this Executive Order; (2) those portions of non-food materials, supplies, and equipment which have been allocated by the War Production Board under Section 2 of this Order for carrying out the food program; (3) any other material or facility, when the Secretary determines that it is necessary, in order to carry out the provisions of this Executive Order, to exercise the priorities or allocation power with respect thereto: *Provided,* That in order to avoid overlapping and conflicting action, prior to taking action pursuant to item (3) hereof, the Secretary shall inform the Chairman of the War Production Board of the action proposed to be taken, and in the event that the Chairman of the War Production Board shall object, the issue shall be determined by the President or such agent or agency as he may designate. Contracts or orders, relating to the materials and facilities specified in this sub-section, made by the Secretary, or by any other officer or agency of the Government at the Secretary's direction, and subcontracts and suborders which the Secretary shall deem necessary or appropriate to the fulfilment of any such contract or order, are hereby declared to be necessary and appropriate to promote the defense of the United States. The Secretary may assign priorities with respect to deliveries under any such contract, order, subcontract or suborder, and he may require acceptance of and performance of any such contract, order, subcontract or suborder, in preference to other contracts or orders for the purpose of assuring such priority. Allocations of materials and facilities under this sub-section may be made by the Secretary in such manner, upon such conditions, and to such extent as he shall deem necessary or appropriate in the public interest, to promote the national defense, and to carry out the provisions of this Executive Order.

c. The powers under the Act of October 10, 1940 (54 Stat. 1090), as amended by the Act of July 2, 1942 (56 Stat. 467), and the Act of October 16, 1941 (55 Stat. 742), as amended by Title VI of the Second War Powers Act, 1942, heretofore vested in the War Production Board by Executive Order No. 8942 of November 19, 1941,[6] Executive Order No. 9024 of January 16, 1942, and Executive Order No. 9040 of January 24, 1942,[7] with respect to the requisitioning of food for human or animal consumption.

d. The powers of acquisition of property under the Act of July 2, 1917 (40 Stat. 241), as amended by Title II of the Second War Powers Act, 1942.

e. The powers of taking over and operating facilities under Section 120 of the National Defense Act of 1916 (39 Stat. 213) and Section 9 of the Selective Training and Service Act of 1940 (54 Stat. 892).

f. The powers with respect to anti-trust prosecutions vested in the Chairman of the War Production Board by Section 12 of the Act of June 11, 1942, Public Law 603, 77th Congress.

g. The power of inspection and audit of the war contractors (including the power of subpoena) under Title XIII of the Second War Powers Act, 1942.

9. The Secretary is authorized to delegate any or all functions, responsibilities, powers (including the power of subpoena), authorities, or discretions conferred upon him by this Executive Order to such person or persons within the Department of Agriculture as he may designate or appoint for that purpose. The Secretary may, except as otherwise provided herein, delegate to any appropriate Federal, state, or local governmental agency, officer, or employee, in such manner and for such periods of time as he shall deem advisable, the execution of any of the provisions of this Executive Order together with any powers of the Secretary under this Executive Order. To the fullest extent compatible with efficiency the Secretary shall utilize existing facilities and services of other governmental departments and agencies and may accept the services and facilities of any state or local governmental agency in carrying out his responsibilities defined hereunder.

10. As used herein, the term "food" shall mean all commodities and products, simple, mixed, or compound, or complements to such commodities or products that are or may be eaten or drunk by either humans or animals, irrespective of other uses to which such commodities or products may be put, and at all stages of processing from the raw commodity to the product thereof in a vendible form for immediate human or animal consumption, but exclusive of such commodities and products as the Secretary shall determine. For the purposes of this Executive Order, the term "food" shall also include all starches, sugars, vegetable and animal fats and oils, cotton, tobacco, wool, hemp, flax fiber, and such other agricultural commodities and products as the President may designate.

11. In the event of any difference of view arising between the Secretary and any other officer or agency of the Government, in the administration of the provisions of this Executive Order, such difference of view shall be submitted for final decision to the President or such agent or agency as the President may designate.

12. The personnel, property, records, unexpended balances of appropriations, allocations, and other funds of the War Production Board primarily concerned with and available for, as determined by the Director of the Bureau of the Budget, the discharge of any of the functions, responsibilities, powers, authorities, and discretions that are vested in the Secretary by this Executive Order are hereby transferred to the Department of Agriculture. In determining the amounts transferred hereunder, allowance shall be made for the liquidation of obligations previously incurred against such balances of appropriations, allocations, or other funds transferred.

13. To facilitate the effective discharge of the Secretary's responsibility under this Executive Order, the following changes are made within the Department of Agriculture:

a. The Agricultural Conservation and Adjustment Administration (except the Sugar Agency), the Farm Credit Administration, the Farm Security Administration, and their functions, personnel, and property; the functions, personnel, and property of the Division of Farm Management and Costs of the Bureau of Agricultural Economics concerned primarily with the planning of current agricultural production; the functions, personnel, and property of the Office of Agricultural War Relations concerned primarily with the production of food; and the functions, personnel, and property established in or transferred to the Department by this Executive Order that are concerned primarily with the production of food, are consolidated into an agency to be known as the Food Production Administration of the Department of Agriculture. The Food Production Administration shall be under the direction and supervision of a Director of Food Production appointed by the Secretary.

b. The Agricultural Marketing Administration, the Sugar Agency of the Agricultural Conservation and Adjustment Administration, and their functions, personnel, and property; the functions, personnel, and property of the Bureau of Animal Industry of the Agricultural Research Administration concerned primarily with regulatory activities; the

[5] 7 F.R. 302.

[6] 6 F.R. 5909.

[7] 7 F.R. 527.

functions, personnel, and the property of the Office of Agricultural War Relations concerned primarily with the distribution of food; and the functions, personnel, and property established in or transferred to the Department of Agriculture by this Executive Order that are concerned primarily with the distribution of food are consolidated into an agency to be known as the Food Distribution Administration of the Department of Agriculture. The Food Distribution Administration shall be under the direction and supervision of a Director of Food Distribution appointed by the Secretary.

c. So much of the unexpended balances of appropriations, allocations, or other funds available (or to be made available) for the use of any agency in the exercise of any function transferred or consolidated by subsections a. and b. of this section or for the use of the head of any agency in the exercise of any function so transferred or consolidated, as the Director of the Bureau of the Budget shall determine, shall be transferred for use in connection with the exercise of the function so transferred or consolidated. In determining the amount to be transferred, the Director of the Bureau of the Budget may include an amount to provide for the liquidation of obligations incurred against such balances of appropriations, allocations, or other funds prior to the transfer.

14. Any provision of any Executive Order or proclamation conflicting with this Executive Order is superseded to the extent of such conflict. All prior directives, rules, regulations, orders, and similar instruments heretofore issued by any Federal agency which affect the subject matter of this Executive Order shall continue in full force and effect unless and until withdrawn or superseded by or under the direction of the Secretary under the authority of this Order. Nothing in this Order shall be construed to limit the powers exercised by the Economic Stabilization Director under Executive Order 9250 dated October 3, 1942,[8] as amended. Nothing in this Order shall be construed to limit the power now exercised by the Price Administrator under the Emergency Price Control Act of 1942, Public Law 421, 77th Congress, as amended, or the Act of October 2, 1942, Public Law 729, 77th Congress.

FRANKLIN D ROOSEVELT

THE WHITE HOUSE,
December 5, 1942.

[F. R. Doc. 42-12940; Filed, December 7, 1942; 11:01 a. m.]

[8] 7 F.R. 7871.

EXECUTIVE ORDER 9278

APPOINTMENT OF BENJAMIN W. THORON, DIRECTOR, DIVISION OF TERRITORIES AND ISLAND POSSESSIONS, DEPARTMENT OF THE INTERIOR, AS ADMINISTRATOR OF THE PUERTO RICO RECONSTRUCTION ADMINISTRATION

By virtue of the authority vested in me under the Emergency Relief Appropriation Act of 1935 (49 Stat. 115, 118) and the act entitled "An Act to provide that funds allocated to Puerto Rico under the Emergency Relief Appropriation Act of 1935 may be expended for permanent rehabilitation, and for other purposes", approved February 11, 1936 (49 Stat. 1135), I hereby appoint Benjamin W. Thoron, Director, Division of Territories and Island Possessions, Department of the Interior, as Administrator of the Puerto Rico Reconstruction Administration, vice Guy J. Swope, resigned, to serve without additional compensation, and to exercise and discharge the functions, duties, and authority conferred upon the Puerto Rico Reconstruction Administration and the Administrator by Executive Orders No. 7057 of May 28, 1935, No. 7180 of September 6, 1935, as amended by No. 7554 of February 17, 1937, and No. 7689 of August 12, 1937.

The said Executive orders are hereby amended accordingly.

FRANKLIN D ROOSEVELT

THE WHITE HOUSE,
December 4, 1942.

[F. R. Doc. 42-12921; Filed, December 5, 1942; 11:47 a. m.]

Regulations

TITLE 6—AGRICULTURAL CREDIT

Chapter II—Commodity Credit Corporation

[Supp. 2 to 1942 C.C.C. Cotton Form 1—Instructions]

PART 232[1]—1942 COTTON LOANS

CERTIFICATE OF INDEMNITY

Instructions for making loans on cotton covered by a Certificate of Indemnity (Form FCI-274, issued by the Federal Crop Insurance Corporation).

Pursuant to the provisions of Title III, section 302 of the Agricultural Adjustment Act of 1938, as amended (52 Stat. 43; 7 U.S.C., 1940 ed., 1302), and the Act of May 26, 1941 (55 Stat. 203; 7 U.S.C., 1940 ed., Sup. 1, 1330) as amended by the Act of December 26, 1941 (55 Stat. 860), and as further amended by the Act of October 2, 1942 (Public No. 729, 77th Congress), Commodity Credit Corporation has authorized the making of loans to producers of 1942 cotton, in accordance with the regulations in this part (1942 C.C.C. Cotton Form 1—Instructions). Such regulations are hereby supplemented as follows:

Section 232.1 (e) *Certificate of Indemnity*, is supplemented by adding at the end thereof the following new paragraph:

(1) *Instructions for making loans on cotton covered by a Certificate of Indemnity (Form FCI-274, issued by the Federal Crop Insurance Corporation)*—(a) *Amount.* Loans on cotton covered by Certificates will be made at the base loan rate shown in the "Schedule of basic rates by cities and counties for cotton entering the 1942 loan", adjusted for the appropriate premium or discount for grade and staple length as shown in the table appearing in the 1942 Cotton Loan Instructions (1942 C.C.C. Cotton Form 1). In determining the loan rate the location and the grade and staple shown in the Certificate shall be used.

(b) *Eligible producer.* Loans on Certificates will be made only to producers determined by the county agricultural conservation committee to be "cooperators" as defined in the 1942 Cotton Loan Instructions (1942 C.C.C. Cotton Form 1).

(c) *Forms.* The following documents must be delivered in connection with every loan:

(1) 1942 Cotton Producer's Note and Loan Agreement (1942 C.C.C. Cotton Form A).

(2) Certificate of Indemnity (FCI-274, issued by the Federal Crop Insurance Corporation).

(3) Producer's Letter of Transmittal (1942 C.C.C. Cotton Form B).

(d) *Manner of obtaining loans.* Producers desiring to obtain loans on indemnity cotton should apply to their county agricultural conservation committee.

If the producer has obtained his Certificate from the Federal Crop Insurance Corporation, the county committee will prepare the note and Producer's Letter of Transmittal for the producer's signature and mail the executed documents, together with the related Certificate, direct to the Regional Office of Commodity Credit Corporation, New Orleans, Louisiana. Upon approval of the forms, Commodity Credit Corporation will make payment of the amount of the loan in accordance with the directions of the producer contained in 1942 C.C.C. Cotton Form A.

If the producer indicates his desire to obtain a loan at the time the "Statement

[1] 7 F.R. 7213.

of Proof of Loss" of the Federal Crop Insurance Corporation is executed, the loan documents may be prepared by the county agricultural conservation committee and transmitted to the branch office of the Federal Crop Insurance Corporation with the "Statement of Proof of Loss." The branch office of the Federal Crop Insurance Corporation will attach the Certificate to the note and forward direct to the Regional Director of Commodity Credit Corporation at New Orleans, Louisiana.

(e) *Repayment.* If the producer desires to obtain the release of his note and return of the Certificate, he should notify the Regional Office of Commodity Credit Corporation, New Orleans, Louisiana. The note and Certificate will then be forwarded to an approved bank for release to the producer upon payment of the amount of the loan, the accrued interest, and proper charges.

If the producer desires to repay the loan from the cash equivalent of the Certificate and obtain the balance of such cash equivalent, he should notify the Federal Crop Insurance Corporation. The Federal Crop Insurance Corporation will establish the amount of the cash equivalent, make payment to Commodity Credit Corporation of the amount due on the loan, and remit any balance after repayment of the loan to the producer. Upon receipt of payment Commodity Credit Corporation will stamp the note "paid" and return it to the producer. The Certificate will be delivered to the Federal Crop Insurance Corporation.

Dated: October 10, 1942.

[SEAL] J. B. HUTSON, *President.*

[F. R. Doc. 42-12949; Filed, December 7, 1942; 11:35 a. m.]

[Amendment No. 2 to 1942 C.C.C. Cotton Form 1—Instructions]

PART 232—1942 COTTON LOANS

LOANS TO PRODUCERS SECURED BY COTTON OF THE 1942 CROP STORED ON FARMS

Pursuant to the provisions of Title III, section 302 of the Agricultural Adjustment Act of 1938, as amended (52 Stat. 43; 7 U.S.C., 1940 ed., 1302), and the Act of May 26, 1941 (55 Stat. 203; 7 U.S.C., 1940 ed., Sup. 1, 1330) as amended by the Act of December 26, 1941 (55 Stat. 860), and as further amended by the Act of October 2, 1942 (Public No. 729, 77th Congress), Commodity Credit Corporation has authorized the making of loans to producers of 1942 cotton, in accordance with the regulations in this part (1942 C.C.C. Cotton Form 1—Instructions). Such regulations are hereby amended as follows:

Section 232.1 (f) *Lending agency,* is amended by adding at the end thereof the following new paragraphs:

§ 232.1 (f) *Lending agency.* * * * Lending agencies which have executed Lending Agency Agreements (1942 C.C.C. Cotton Form D) are authorized to make loans in accordance with the provisions of the 1942 Cotton Loan Instructions (1942 C.C.C. Cotton Form 1, as amended) to producers on cotton of the 1942 crop upon tender by the producers of duly executed 1942 Cotton Producers' Notes (1942 C.C.C. Cotton Form E) and copies of duly executed and recorded 1942 Cotton Chattel Mortgages (1942 C.C.C. Cotton Form F) covering such cotton. This authorization is subject to the following terms and conditions:

(1) Each such note evidencing a loan made by a lending agency shall, together with the copy of the mortgage securing such note, be tendered to the Regional Office of Commodity Credit Corporation, New Orleans, Louisiana, for purchase or pooling by Commodity Credit Corporation, within fifteen days after the date of such note.

(2) Commodity Credit Corporation shall, as directed by the lending agency, purchase each such note at its face value, plus interest at the rate of 1½ per cent per annum from the date of such note to the date of payment by Commodity Credit Corporation, or place such note in a pool operated in accordance with the provisions of the Lending Agency Agreement and the Rules and Procedure Relating to the Purchase or Pooling by Commodity Credit Corporation of 1942 Cotton Producers' Notes Pursuant to a Lending Agency Agreement (Supplement 1 to 1942 C. C. C. Cotton Form 1, as amended).

Dated: October 7, 1942.

[SEAL] J. B. HUTSON, *President.*

[F. R. Doc. 42-12950; Filed, December 7, 1942; 11:35 a. m.]

[Amendment No. 1—1942 C.C.C. Cotton Form 1—Instructions]

PART 232—1942 COTTON LOANS

INCREASE IN LOAN RATES ON COTTON PRODUCED IN 1942

Pursuant to the provisions of Title III, section 302 of the Agricultural Adjustment Act of 1938, as amended (52 Stat. 43; 7 U.S.C., 1940 ed., 1302), and the Act of May 26, 1941 (55 Stat. 203; 7 U.S.C., 1940 ed., Sup. 1, 1330) as amended by the Act of December 26, 1941 (55 Stat. 860), and as further amended by the Act of October 2, 1942 (Public No. 729, 77th Congress), Commodity Credit Corporation has authorized the making of loans to producers of 1942 cotton, in accordance with the regulations in this part (1942 C.C.C. Form 1—Instructions). Such regulations are hereby amended as follows:

Section 232.3 *Amount,* is amended by adding at the end thereof, the following language:

§ 232.3 *Amount.* * * * The loan rates on cotton produced in 1942, in accordance with the provisions of the Act approved October 2, 1942 (Public No. 729, 77th Congress), will be increased 1 cent per pound above the rates previously announced for all grades, staples, and locations. The increased loan rate is effective immediately, and additional payments will be made to producers who have already obtained loans on the 1942 crop.

Dated: October 7, 1942.

[SEAL] J. B. HUTSON, *President.*

[F. R. Doc. 42-12951; Filed, December 7, 1942; 11:35 a. m.]

[Amendment No. 1 to Supplement No. 1 to 1942 C. C. C. Cotton Form 1—Instructions]

PART 232—1942 COTTON LOANS

POOLING OF 1942 COTTON PRODUCERS' NOTES

Pursuant to the provisions of Title III, section 302 of the Agricultural Adjustment Act of 1938, as amended (52 Stat. 43; 7 U.S.C., 1940 ed., 1302), and the Act of May 26, 1941 (55 Stat. 203; 7 U.S.C., 1940 ed., Sup. 1, 1330) as amended by the Act of December 26, 1941 (55 Stat. 860), and as further amended by the Act of October 2, 1942 (Public No. 729, 77th Congress), Commodity Credit Corporation has authorized the making of loans to producers of 1942 cotton, in accordance with the regulations in this part (1942 C.C.C. Cotton Form 1—Instructions). Such regulations are hereby supplemented as follows:

Section 232.12a[1] *Rules and procedure relating to the purchase or pooling by Commodity Credit Corporation of 1942 cotton producers' notes pursuant to a lending agency agreement,* is supplemented by adding at the end thereof the following new paragraphs:

§ 232.12a * * *

(16) 1942 Cotton Producers' Notes (1942 C. C. C. Cotton Form E) evidencing loans made by lending agencies on farm-stored cotton, which are tendered to the Regional Office of Commodity Credit Corporation, New Orleans, Louisiana, by a lending agency for pooling, and which are found to be in acceptable form by such regional office, shall be pooled in the pool established in the New Orleans Branch of the Federal Reserve

[1] 7 F.R. 7220.

Bank of Atlanta, in the same manner and on the same terms and conditions as if they were 1942 Cotton Producer's Note and Loan Agreements (1942 C.C.C. Cotton Form A), in accordance with the Lending Agency Agreement (1942 C.C.C. Cotton Form D) and the Rules and Procedure Relating to the Purchase or Pooling by Commodity Credit Corporation of 1942 Cotton Producers' Notes Pursuant to a Lending Agency Agreement (Supplement No. 1 to 1942 C.C.C. Cotton Form 1, as amended).

(17) 1942 Cotton Producers' Notes (1942 C.C.C. Cotton Form E) which are held by Commodity Credit Corporation may be pooled in the pool established in the New Orleans Branch of the Federal Reserve Bank of Atlanta, in the same manner and on the same terms and conditions as if they were 1942 Cotton Producer's Note and Loan Agreement (1942 C.C.C. Cotton Form A) held by Commodity Credit Corporation, in accordance with the Lending Agency Agreement and the Rules and Procedure Relating to the Purchase or Pooling by Commodity Credit Corporation of 1942 Cotton Producers' Notes Pursuant to a Lending Agency Agreement (Supplement No. 1 to 1942 C.C.C. Cotton Form 1, as amended).

Dated: October 7, 1942.

[SEAL] J. B. HUTSON, *President.*

[F. R. Doc. 42-12952; Filed, December 7, 1942; 11:35 a. m.]

[Supplement No. 3 to 1942 C. C. C. Cotton Form 1—Instructions]

PART 232—1942 COTTON LOANS

LOANS ON 1942 FARM-STORED COTTON

Pursuant to the provisions of Title III, section 302 of the Agricultural Adjustment Act of 1938, as amended (52 Stat. 43; 7 U.S.C., 1940 ed., 1302), and the Act of May 26, 1941 (55 Stat. 203; 7 U.S.C., 1940 ed., Sup. 1, 1330) as amended by the Act of December 26, 1941 (55 Stat. 860), and as further amended by the Act of October 2, 1942 (Public No. 729, 77th Congress), Commodity Credit Corporation has authorized the making of loans to producers of 1942 cotton, in accordance with the regulations in this part (1942 C.C.C. Cotton Form 1—Instructions). Such regulations are supplemented by adding at the end thereof the following new section:

§ 232.16 *Loans on 1942 farm-stored cotton.* In addition to loans on warehouse-stored cotton, Commodity Credit Corporation will make available loans on farm-stored cotton of the 1942 crop. Such loans will be made available only to cooperators and will be at the full loan rate, which shall be the base loan rate shown in the Schedule of Basic Loan Rates for Farm-Stored Cotton for the county, adjusted for the appropriate premium or discount for grade and staple length as shown in the table contained in the 1942 Cotton Loan Instructions. Eligibility of a cotton producer for such a loan shall be governed by the provisions of the 1942 Cotton Loan Instructions, except that eligible cotton shall be cotton produced in 1942 by or for a producer: *Provided,* That the cotton meets the following requirements:

(a) Such cotton must be of a grade and staple specified in § 232.3 of these instructions.

(b) Such cotton must be covered by a 1942 Cotton Chattel Mortgage (1942 C.C.C. Cotton Form F) which will give the payee of the 1942 Cotton Producer's Note (1942 C.C.C. Cotton Form E) secured by such mortgage a first lien on such cotton.

(c) Such cotton must not be compressed to high density.

(d) Such cotton must be free and clear of all liens and encumbrances.

(e) Such cotton must be tendered for a loan by a person who has the legal right to mortgage it as security for a loan.

(f) The beneficial interest in the cotton must be, and must always have been, in the person tendering such cotton for a loan, or in such person and any share tenant or sharecropper having an interest in the cotton or its proceeds in case such person is a landlord, cash tenant, or standing-rent tenant and is placing under loan cotton in which both he and a share tenant or sharecropper have an interest.

(g) Such cotton must not have been received in payment of standing or fixed rent.

(h) All persons having an interest in the cotton must be entitled to loans on the cotton at the full loan rate.

Loans may be obtained either directly from Commodity Credit Corporation or through a lending agency. The procedure to be followed in obtaining loans may be found in the Instructions and Procedure for State and County Committees Pertaining to the 1942 Farm-Stored Cotton Loan Program issued by the Agricultural Adjustment Agency.

Members of county agricultural conservation committees, by approving 1942 cotton producers' notes by signing in the space provided on such notes for the approval of the note by the county agricultural conservation committee, certify on behalf of such committees:

(a) That the producer is a "cooperator" as defined in the 1942 Cotton Loan Instructions and is entitled to a loan at the rates applicable to "cooperators".

(b) That the mortgaged cotton is stored under seal in a storage facility located upon the premises described in section 2 of the chattel mortgage executed by the producer and is in good condition and free from any damage.

(c) That the storage facility in which the mortgaged cotton is stored was inspected, approved, and sealed by a representative of this committee.

(d) That the grades and staple lengths shown in the Schedule of Farm-Stored Cotton in the chattel mortgage are the same as those recorded by the Board of Cotton Examiners of the United States Department of Agriculture for such bales.

(e) That the original chattel mortgage, or a copy thereof, has been properly filed for record, in accordance with the State laws governing execution and recording of chattel mortgages and the requirements of Commodity Credit Corporation.

(f) That the original chattel mortgage or a copy thereof, bearing the fully executed receipt of the county recording official, is held by the committee.

(g) That, in the event the chattel mortgage has been signed by any person in a representative or fiduciary capacity, the committee has determined that such representative or fiduciary has proper authority to so act; and that, if the committee did not have personal knowledge of the authority of the representative or fiduciary, it has required such person to show the committee documentary evidence of his authority.

(h) That the chattel mortgage was prepared under the supervision and with the assistance of the committee, and that the fee charged the producer for all services rendered by the committee in inspecting the storage facility and the mortgaged cotton and in assisting the producer to prepare the chattel mortgage did not exceed the amount authorized to be charged for such services by Commodity Credit Corporation.

(i) That satisfactory evidence of the genuineness of the producer's signature and of the authority of all parties executing the note and chattel mortgage, lien waivers, and consents for storage, has been received, and that any documentary evidence of such authority will be held by the committee.

(j) That, to the best of the committee's knowledge and belief, all data entered on the chattel mortgage and all representations made by the producer are true and correct, and that the mortgaged cotton is "eligible cotton", as defined in this instrument.

(k) That a careful search has been made of lien records and, to the best knowledge and belief of the committee, priority of existing liens on the mortgaged cotton has been duly waived.

(l) That consents for storage, where necessary, have been executed.

Dated: October 7, 1942.

[SEAL] J. B. HUTSON, *President.*

[F. R. Doc. 42-12953; Filed, December 7, 1942; 11:35 a. m.]

TITLE 10—ARMY: WAR DEPARTMENT

Chapter VIII—Procurement and Disposal of Equipment and Supplies

PART 81—PROCUREMENT OF MILITARY SUPPLIES AND ANIMALS [1]

MISCELLANEOUS AMENDMENTS

In addition to changes published in the FEDERAL REGISTER October 13, 1942 (7 F.R. 8163), November 13, 1942 (7 F.R. 9268), and November 24, 1942 (7 F.R. 9660) affecting War Department Procurement Regulations as revised September 5, 1942, new §§ 81.107 (h), 81.305, 81.306, 81.307, 81.308, 81.318d, 81.318e, 81.318f, 81.976, 81.977, 81.980, and 81.1108 are added, and 81.107 (h), 81.107 (i), 81.205 (e), (f), and (g), 81.207 (a), 81.304, 81.305, 81.307, 81.308, 81.309, 81.310, 81.311, 81.314, 81.315, 81.316, 81.319, 81.320, 81.321, 81.321a, 81.321b, 81.332, 81.816, 81.817, 81.937, 81.943, 81.944, 81.948, 81.955, 81.956, 81.961, 81.964 (b), 81.964 (e), 81.964 (k), 81.967, 81.1006 (e), 81.1013, and the introductory paragraph preceding § 81.1301 are amended, redesignated or rescinded as follows:

Numbers to the right of the decimal point correspond with the respective paragraph numbers in procurement regulations.

AUTHORITY: Sec. 5a, National Defense Act as amended, 41 Stat. 764, 54 Stat. 1225; 10 U.S.C. 1193–1195, and the First War Powers Act 1941; 55 Stat. 838, 50 U.S.C. Sup. 601–622.

Paragraphs (h) and (i) of § 81.107 are redesignated (i) and (j), respectively, paragraph (i) being amended, and a new paragraph (h) is added as follows:

§ 81.107 *Authority with respect to procurement.* * * *

(h) *Delegation to Chief, Legal Branch of authority to approve contract forms.* Under date of October 7, 1942, the following memorandum was issued:

MEMORANDUM for William L. Marbury, Chief, Legal Branch, Purchases Division.

Subject: Delegation of Authority to Approve Contract Forms and Deviations from Approved Forms.

The authority delegated to me by the Commanding General, Services of Supply, dated September 15, 1942 and the authority delegated to me by the Under Secretary of War, dated September 15, 1942 (in respect of matters relating to the Army Air Forces) to act for the Secretary of War or the Under Secretary of War in approving War Department contract forms and deviations from approved forms is hereby further delegated to the Chief, Legal Branch, Purchases Division, Services of Supply, and to any person who for the time being may be acting in that capacity.

ALBERT J. BROWNING,
Colonel, A. U. S.,
Director, Purchases Division.

(i) *Authority delegated by these procurement regulations.* These regulations to the extent, and only to the extent, that they actually confer authority upon the chiefs of the supply services and other officers or civilian officials of the War Department to exercise power to enter into contracts and into amendments or modifications of contracts heretofore or hereafter made and to make advance, progress and other payments thereon shall constitute a redelegation by the Commanding General, Services of Supply of the authority delegated to him as set forth in paragraph (e) of this section, and by the Special Representative of the Under Secretary of War of the authority delegated to him, as set forth in paragraph (g) of this section. The authority granted as provided in the preceding sentence, of course, does not dispense with the necessity of obtaining any approval expressly specified in any paragraph of these procurement regulations (see e. g. § 81.315). Authority conferred upon the chiefs of the supply services under any paragraph of these procurement regulations may be redelegated to such officer or officers or civilian official or officials as the chiefs of the supply services severally may direct, whether or not express mention of the powers of redelegation is made in any such paragraph, unless it is expressly provided in the paragraph that the power shall not be redelegated. The exercise prior to the date of these regulations of any such authority by any such officer or officers or civilian official or officials is hereby ratified and confirmed in all respects.

(j) *Instructions on procedure.* * * *

NEGOTIATED PURCHASES

Section 81.205 (e) is rescinded, paragraphs (f) and (g) are redesignated (e) and (f), respectively, as follows:

§ 81.205 *Special instructions.* * * *

(e) *Applicability of labor statutes to negotiated contracts.* * * *

(f) *Commanders in theaters of operations.* * * *

PURCHASE ACTION REPORTS

Section 81.207 (a) is amended by changing the "Copy Distribution" at the end thereof, as follows:

§ 81.207 *Reports of purchase actions exceeding $10,000*—(a) *A report of every original purchase action which exceeds $10,000.* * * *

Copy distribution:
2—Chief, Service.
1—C. G. SOS, Statistics and Progress Branch.
1—Your file.

NOTE: Because of the numerous changes involved §§ 81.304–81.321b are being republished in full with additions and changes under §§ 81.304–81.321 (n).

AUTHORITY TO MAKE AWARDS, CONTRACTS, AND MODIFICATIONS THEREOF; REQUIRED APPROVALS

§ 81.304 *Definitions*—(a) *Standard forms of contract.* The phrase "standard forms of contract", as used in this section, includes:

(1) Forms of contract which may from time to time be approved for the general use of all supply services by the Chief, Legal Branch, Purchases Division, Headquarters, Services of Supply. The following contract forms are hereby approved for such use:

(a) United States Standard forms of contract, provided they comply with the requirements of §§ 81.322–81.360.

(b) War Department Contract Form No. 1, Lump Sum Supply Contract. (See § 81.1301)

(c) War Department Contract Form No. 2, Lump Sum Construction Contract. (See § 81.1302)

(d) War Department Contract Form No. 3, Fixed-Fee Construction Contract. (See § 81.1303)

(e) War Department Contract Form No. 4, Fixed-Fee Architect-Engineer Contract. (See § 81.1304)

(f) War Department Contract Form No. 5, Short-Form Supply Contract (Negotiated). (See § 81.1305)

(g) War Department Contract Form No. 6, Offer and Acceptance. (See § 81.1306)

(h) War Department Contract Form No. 7, Letter Purchase Order. (See § 81.1307)

(i) War Department Contract Form No. 8, Letter Contract (Supplies). (See § 81.1308)

(j) War Department Contract Form No. 9, Letter Contract (Fixed-Fee Construction). (See § 81.1309)

(k) War Department Contract Form No. 10, Letter Contract (Lump Sum Construction). (See § 81.1310)

(l) War Department Contract Form No. 11, War Risk Indemnity Contract. (See § 81.1311)

(m) War Department Contract Form No. 12, Fixed-Fee Architect-Engineer-Construction-Management Services Contract. (See § 81.1312)

(2) Forms of contract, devised by a particular supply service to meet the needs of a recurrent situation of a special type, which may from time to time be approved by the Chief, Legal Branch, Purchases Division, Headquarters, Services of Supply, for the general use of that supply service. Any form of contract which was approved for the general use of a particular supply service at any time from July 1, 1942, to November 15, 1942, by the Director, Purchases Division, or the Chief, Legal Branch, Purchases Division, Headquarters, Services of Supply is hereby approved pursuant to this subparagraph, provided it complies with the requirements of §§ 81.322–81.360.

(b) *Contract.* As used in this section, the term "contract" means any contract except supplemental agreements and change orders and except those contracts referred to in § 83.707 (c), § 81.1012 and § 81.1013.

(c) *Price.* As used in this section, the term "price" means in the case of a lump-sum contract (or supplemental agreement or change order relating thereto), the stated price, and in the case of a cost-plus-a-fixed-fee contract (or supplemental agreement or change order relating thereto), the estimated cost-plus-the-fixed-fee.

(d) *Supply service.* Whenever authority is conferred by this section upon a supply service, that authority may be exercised by the chief of the supply service or by any officer or officers or civilian official or officials whom he may designate, subject to such regulations as he may prescribe.

[1] See issues of October 10, 1942; November 13, 1942; November 24, 1942; 7 F.R. 8082, 9268, 9660.

§ 81.305 *Making and approval of awards of contracts, supplemental agreements and change orders*—(a) *Authority of supply services to make awards.* The following awards may be made by the supply service concerned without approval of higher authority:

(1) Awards of contracts (other than Architect-Engineer, Management or similar contracts) involving a price of less than $5,000,000 and awards of supplemental agreements and change orders which have the effect of increasing the price of contracts (other than Architect-Engineer, Management or similar contracts) by less than $5,000,000.

(2) Awards of Architect-Engineer, Management or similar contracts when the construction contracts to which they relate involve a price of less than $5,000,000, and awards of supplemental agreements and change orders affecting Architect-Engineer, Management or similar contracts when the changes being concurrently made in the construction contracts to which they relate have the effect of increasing the price of the construction contracts by less than $5,000,000.

(b) *Awards requiring the approval of Director, Purchases Division.* The award of all contracts, supplemental agreements and change orders other than those specified in subparagraph (1) and (2) of paragraph (a) of this section, must be submitted for approval to the Director, Purchases Division, Headquarters, Services of Supply.

(c) *Submission of contract, supplemental agreement or change order in lieu of award.* In lieu of submitting an award for approval under paragraph (b) of this section, the contract, supplemental agreement or change order may itself be submitted for approval and manual execution by the Director, Purchases Division, Headquarters, Services of Supply.

§ 81.306 *Making and approval of contracts, supplemental agreements and change orders*—(a) *Authority of supply services to make contracts.* A contract may be made by the supply service concerned without approval of higher authority (provided that approval of the Award has been obtained, if such approval is required under § 81.305 (b) and the contract substantially embodies the award as approved), if:

(1) The contract is written on a standard form of contract; or

(2) The contract (i) complies with the requirements of §§ 81.322–81.360, and (ii) does not contain any provision or involve any matter of policy which, in the opinion of the supply service, should be considered and passed upon by authority higher than the supply service.

(b) In determining whether a contract provision or matter of policy should be considered and passed upon by higher authority, consideration shall be given by the supply service to the following factors among others:

(1) Whether there is involved a conflict with a policy theretofore approved by higher authority;

(2) Whether there is involved a decision on an important question of policy which has not theretofore been passed upon by higher authority;

(3) Whether there is involved a decision on any matter in which uniformity among the several supply services appears to be desirable;

(4) Whether there is involved a decision of an important or doubtful question of law.

(c) *Authority of supply services to make supplemental agreements and change orders.* Except as provided in §§ 81.308–81.308 b, a supplemental agreement or change order modifying a contract (other than an Architect-Engineer, Management or similar contract) may be made or issued by the supply services concerned without approval of higher authority (provided that approval of the award has been obtained if such approval is required under the provisions of § 81.315 (b) and the supplemental agreement, or change order substantially embodies the award as approved), if:

(1) The supply service had authority to make the original contract pursuant to paragraph (a) of this section, or the supply service did not have such authority but obtained approval pursuant to paragraph (d) of this section; and

(2) The provisions and features of the supplemental agreement or change order are themselves such that the supply service would have authority to include them in an original contract pursuant to paragraph (a) of this section.

Changes in Architect-Engineer, Management or similar contracts may also be made by the supply service concerned, *Provided,* That the requirements of subparagraphs (1) and (2) above are satisfied *And provided,* That the change being currently made in the construction contract to which the Architect-Engineer, Management or similar contract relates does not necessitate approval.

(d) *Contracts, supplemental agreements and change orders requiring approval of Purchases Division.* The approval of the Purchases Division, Headquarters, Services of Supply shall be obtained, as herein provided, in connection with all contracts other than those specified in paragraph (a) of this section, and all supplemental agreements and change orders other than those specified in paragraph (c) of this section. Where approval is necessary solely because one or more provisions of the contract, supplemental agreement or change order fail to comply with the requirements of §§ 81.322–81.360 or present a matter or matters of policy which should be considered by authority higher than the supply service, the necessary approval may be obtained, prior to execution of the instrument on behalf of the supply service, on submission of the contract or the material provisions thereof to the Chief, Legal Branch, Purchases Division, whose approval will be signified by indorsement, memorandum, letter or telegram in response to the request for approval; or on submission of the contract, supplemental agreement or change order, after execution on behalf of the supply service, for approval and manual execution by the Director, Purchases Division. In every other instance the contract, supplemental agreement or change order must be submitted, after execution on behalf of the supply service, for approval and manual execution by the Director, Purchases Division.

§ 81.307 *Authority of supply service to reallocate awards and contracts.* It is recognized that, in order to promote the more efficient utilization of combined manufacturing facilities or to prevent interruption of work, it may become advisable to reallocate an award, contract, or modification thereof. Accordingly, when an award, contract, or modification thereof has been made with required approvals, and the supply service concerned thereafte determines that it is advisable to obtain the materials or services involved wholly or in part from another contractor or from two or more contractors, it is authorized without further approval to reallocate the award, contract or modification thereof in whole or in part to another contractor or to two or more contractors, and for this purpose to make appropriate awards and appropriate contracts: *Provided,* That the aggregate quantities, aggregate prices, and the terms of the awards and contracts resulting from the reallocation are substantially the same as those contained in the award, contract or modification thereof which was the subject of the reallocation.

§ 81.308 *Supplemental agreements and change orders not involving receipt of consideration.* Approval and manual execution by the Director, Purchases Division, Headquarters, Services of Supply, will be required for each supplemental agreement or change order which does not involve the receipt by the Government of adequate legal consideration, or which modifies or releases an accrued obligation owing directly or indirectly to the Government including accrued liquidated damages or liability under any surety or other bonds. In any case in which such modification or release is deemed desirable by the chief of the supply service, the instruments involved accompanied by a recommendation for the approval thereof and a full statement of the circumstances and necessity, should be transmitted by the supply service concerned to said Director.

§ 81.308a *Correction of mistakes.* Effecting amendment of contracts with the least possible delay to correct misunderstandings, mistakes, errors and ambiguities will facilitate the prosecution of the war by expediting the procurement program and by giving contractors proper assurance that mistakes, unavoidable in war program as large and extensive as that now in progress, will be corrected expeditiously and fairly. Accordingly, supplemental agreements to correct misunderstandings, mistakes, errors, and ambiguities in contracts submitted for the approval of the Director, Purchases Division, Headquarters, Services of Supply, in accordance with the provisions of § 81.308 will be accompanied by a full statement of the circumstances in connection therewith including copies of all relevant papers. The evidence submitted shall show that an error or mis-

take was made or that a misunderstanding or ambiguity exists, in what it consists and how it occurred, and where relevant the true intent of the parties. Approval of the Director, Purchases Division, will not be required in the case of any such supplemental agreement under which the Government receives adequate new legal consideration.

§ 81.308b *Contracts or supplemental agreements providing for advance payments.* The subject of advance payments is treated in §§ 81.319–81.321 (n). If a contract contains a clause authorizing the making of advance payments, the determination of whether the approval of the Purchases Division must be obtained under § 81.306 (d) should be based upon the provisions of the contract other than the clause providing for advance payments. If the making of advance payments is authorized under a supplemental agreement, the provisions of this section shall be inapplicable, and only §§ 81.319–81.321 (n) shall be considered in determining whether approval of such supplemental agreement by any authority higher than the supply service is necessary.

FORMALITIES IN CONNECTION WITH EXECUTION OF CONTRACTS AND MODIFICATIONS THEREOF

§ 81.309 *Numbering contracts*—(a) *When required.* Every contract involving the receipt or expenditure of public moneys will be numbered when:

(1) The actual or estimated amount involved is $5,000 or more, or

(2) When more than one payment (or receipt) is involved, regardless of the amount involved.

(b) *System.* Contract numbers will be placed in the upper righthand corner and will consist of the following in the order named:

(1) The capital letter "W", representing the War Department.

(2) Station number representing the station or office as published in finance circulars.

(3) The letter or letters representing the supply service. The Chief of Finance will be promptly notified of any change in the letter symbol or of the adoption of a new symbol.

(4) A serial number, separated from the above by a hyphen, commencing with the number 1 and continuing in succession indefinitely without regard to the fiscal year. When the serial number reaches the limit of five digits (99,999), a new series will be used beginning with the serial number 1 and followed by the capital letter "A". Should additional series become necessary, they will be distinguished by the capital letters "B", "C", "D", etc., as may be required.

(c) *Example.* Based on § 81.305 (b) above, the following is the number of the first numbered contract executed by the Quartermaster, Fort Bragg, North Carolina:

W–159 qm–1

(d) *Organized reserves.* The station number used for contracts pertaining to all units of the organized reserves in a service command will be that assigned to the organized reserves of that service command and the letters will be "qm". Only one series of serial numbers will be used in a service command for contracts pertaining to all units of the organized reserves in that service command. Commanding officers of service commands will assign each number required.

§ 81.310 *Fiscal procedures*—(a) *Allotments of funds not to be exceeded.* The authority to make contracts is subject to the proviso that the allotments made for the supplies will not be exceeded, and officers who are charged with making purchases will be held strictly responsible that obligations incurred by them do not exceed the amounts authorized and that such obligations include no other purpose than that indicated in the allotment.

(b) *Statements as to availability of funds.* See AR 35–840[1] for the statements which will be made on contracts and on purchase orders placed under existing contracts as to the funds chargeable and the sufficiency thereof.

§ 81.311 *Execution of contracts.*—(a) *Contracts with individuals.* A contract with an individual will be signed by the individual in his own name.

(b) *Contracts with an individual trading as a firm.* Such a contract will be signed by the individual, without further reference to the trade name.

(c) *Contracts with partnerships.* (1) The contract may be signed in the name of the partnership by one or more of the partners. Each partner who signs will sign as one of the firm.

(2) A contract with a partnership doing business through a local representative or agent may be executed in the name of the firm by such local representative or agent, in which case the contracting officer will:

(i) File with the contract a properly certified copy of the power of attorney showing the authority of such representative or agent, or

(ii) Certify on the contract that he has satisfied himself of the signer's authority to bind the firm and has waived the requirements as to furnishing evidence of such authority.

(d) *Contracts with corporations.* (1) A contract with a corporation will have the name of the corporation written in the blank space provided therefor at the end of the contract form, followed by the word "By", after which the officer or person who has been authorized to contract on behalf of the corporation will sign his name, with the designation of his official capacity.

(2) The contracting officer will, in all cases, satisfy himself that the signer has authority to bind the corporation, and will either require from him satisfactory evidence thereof and file this evidence with the contract, or will procure or make one of the alternate certificates indicated on the contract form.

(3) Evidence filed with a contract will consist of extracts from the records of the corporation showing:

(i) The election of the officers executing the contract and bond on behalf of the corporation.

(ii) The grant of authority to the officers who execute the contract and bond.

The above-mentioned copies will be certified by the custodian of such records, under the corporate seal (if there be one), to be true copies of the records of the corporation.

(e) *Contracting officer's signature.* The contracting officer will sign on behalf of the United States in the space provided for his signature, and his official title will be added.

(f) *Approval articles.* If approval and manual execution of a contract, supplemental agreement or change order by any War Department officer or official other than the contracting officer are required pursuant to these procurement regulations or the regulations of the supply service concerned, (1) an appropriate approval article will be included in the instrument, (2) all changes and deletions shall have been made before the instrument is forwarded for such approval, and (3) the instrument shall not be valid until such approval and manual execution have been obtained.

§ 81.312 *Statement and Certificate of Award (Standard Form No. 1036).* (a) When contracts are negotiated in accordance with the authority referred to in § 81.203, Standard Form No. 1036 need not be executed. (General Regulations of Comptroller General No. 51, Supp. No. 8, June 1, 1942.) However, when Standard Form No. 1036 is not executed, either:

(i) The notation "Negotiated Contract," signed by the officer negotiating the contract, should appear under or in close proximity to the contract symbol and number on the cover sheet of the contract or

(ii) The contract should show in the wording thereof that it was negotiated under the authority referred to in § 81.203 (Decision of Comptroller General dated July 11, 1942 (A–51607), rendered in response to letter of Acting Judge Advocate General of Navy dated June 27, 1942).

(b) If in exceptional cases contracts are awarded pursuant to formal advertising, Standard Form No. 1036, properly executed in accordance with instructions contained on the form, will be attached to the copy of the agreement which is furnished the General Accounting Office.

§ 81.313 *Form of supplemental agreements and change orders*—(a) *Supplemental agreements.* Supplemental agreements will be reduced to writing and signed by the contracting parties. Supplemental agreements will bear the same identification as the contract which is thereby modified or amended, and will be lettered or numbered, whichever method is authorized by the chief of the supply service concerned, in the order in which the modifications or amendments to the contract are issued. One continuous series of lettering or numbering as the case may be, will be used for each contract, even though it is modified or amended, both by supplemental agreements and by change orders. Signed numbers and copies of supplemental agreements will be dis-

[1] Administrative regulations of the War Department relating to fiscal procedure.

tributed in the same manner as is prescribed for the contracts to which they pertain, and the contracting officer will note on his retained copy of the supplemental agreement the date on which the contractor's number was delivered or mailed to him.

(b) *Change orders.* Change orders will be in the form of letters addressed to the contractor, and will specify the number of the contract concerned, the changes to be made, the increase or decrease in price and time for performance and such other terms as may be necessary. Change orders will bear the same identification as the contract which is thereby modified or amended and will be lettered or numbered whichever method is authorized by the chief of the supply service concerned, in the order in which the modifications or amendments to the contract are issued. One continuous series of lettering or numbering as the case may be will be used for each contract, even though it is modified or amended both by supplemental agreements and by change orders. Signed numbers and copies of change orders will be distributed in the same manner as is prescribed for the contracts to which they pertain, and the contracting officer will note on his retained copy of the change order the date on which the contractor's number was delivered or mailed to him.

§ 81.314 *Consent of sureties to modifications*—(a) *Supplemental agreements.* Subject to the provisions of paragraph (c) of this section, if payment or performance bonds have been executed in connection with a contract or if an advance payment bond has been given in connection with an advance payment made under a contract, the consent of the surety should be obtained to any supplemental agreement modifying or amending the contract.

(b) *Change orders.* Likewise, subject to the provisions of paragraph (c) of this section, the consent of such a surety should be obtained to any change order which has the effect of increasing the contract price by more than $25,000. Such consent is not necessary when the change order effects an increase in the contract price of $25,000 or less.

(c) *Exception to requirement of consent of surety.* The provisions of paragraphs (a) and (b) of this section are subject to the qualification that the consent of a surety under a bond executed prior to the execution of a supplemental agreement, or change order is not necessary if (i) an additional bond is furnished in support of the supplemental agreement or change order and (ii) such surety is also surety on the additional bond.

(d) *Examination of consents of sureties.* Each consent of surety required by paragraphs (a) and (b) of this section will be forwarded, together with a signed number of the supplemental agreement or change order to which it relates, to the Judge Advocate General for examination as to form, execution and legal sufficiency.

(e) *Form of consent of surety.* The following form of consent of surety is approved for use subject to such deviations as may be appropriate in any given case:

Consent of surety is hereby given to the foregoing supplemental agreement, and the surety agrees that its bond or bonds shall apply to and cover the due performance of the contract as modified and extended thereby.

The words "supplemental agreement" will be changed to "change order" in appropriate cases.

DISTRIBUTION OF CONTRACTS AND ORDERS THEREUNDER

§ 81.315 *General.* The following general instructions are applicable to the distribution of both numbered and unnumbered contracts:

(a) Contracts will not be distributed until properly signed by all parties, and approved, if approval is required.

(b) All instructions relating to distribution of contracts are subject to the provisions of AR 380-5[1] and all other current instructions governing the safeguarding and disclosing of information affecting the national defense of the United States.

§ 81.316 *Numbered contracts.* Subject to such special instructions as may be issued by the chief of the supply service concerned, numbered contracts will be distributed as follows:

(a) The original signed number will be forwarded to the General Accounting Office.

(b) The duplicate signed number will be filed with the contracting officer or with the chief of the supply service concerned.

(c) The triplicate signed number will be forwarded to the contractor.

(d) An authenticated copy will be forwarded to the disbursing officer for his files.

(e) Additional authenticated copies or unauthenticated copies will be distributed as directed by the chief of the supply service concerned.

§ 81.317 *Unnumbered contracts.* (a) The original signed number will be furnished the disbursing officer and will be attached to the voucher on which payment is made and will accompany such voucher to the General Accounting Office.

(b) The duplicate signed number will be forwarded to the contractor.

(c) An authenticated copy will be furnished the disbursing officer for his files.

(d) Additional copies will be prepared and distributed as directed by the chief of the supply service concerned.

§ 81.318 *Special cases*—(a) *Purchases under contracts of Procurement Division, Treasury Department; Navy Department; Post Office Department; etc.* (1) Purchase orders covering such purchases will be distributed in accordance with § 81.313.

(2) The chief of the supply service concerned will secure compliance with all special instructions of the respective agencies which make the contracts.

[1] Administrative regulations of the War Department relating to the safeguarding of military information.

(b) *United States Employees' Compensation Commission.* Contracting officers will, immediately upon completion, transmit to the United States Employees' Compensation Commission, Washington, D. C., an authenticated copy of the following:

(1) Contracts in which the contractor is designated as the agent of the United States.

(2) Contracts under which, while the contractor is not specifically named as the agent of the United States, the Government may at any and all times direct and control the work in all its details and stages, not merely as to what will be done but also as to how it will be done.

MISCELLANEOUS

§ 81.318a *Assignments*—(a) *Basic statutes.* There are two statutes creating restrictions on assignments of contracts with and claims against the United States. In 1940 both of these statutes were amended by the addition thereto of a paragraph making the restrictions inapplicable in certain situations. (See § 81.320 (b))

Prior to the amendment in 1940, Revised Statutes 3737 provided as follows:

> No contract or order, or any interest therein, shall be transferred by the party to whom such contract or order is given to any other party, and any such transfer shall cause the annulment of the contract or order transferred, so far as the United States are concerned. All rights of action, however, for any breach of such contract by the contracting parties are reserved to the United States. (41 U.S.C. 15)

Prior to said amendment in 1940, Revised Statutes 3477 provided as follows:

> All transfers and assignments made of any claim upon the United States, or of any part or share thereof, or interest therein, whether absolute or conditional, and whatever may be the consideration therefor, and all powers of attorney, orders, or other authorities for receiving payment of any such claim, or of any part or share, thereof, * * *, shall be absolutely null and void, unless they are freely made and executed in the presence of at least two attesting witnesses, after the allowance of such a claim, the ascertainment of the amount due, and the issuing of a warrant for the payment thereof. Such transfers, assignments, and powers of attorney, must recite the warrant for payment, and must be acknowledged by the person making them, before an officer having authority to take acknowledgments of deeds, and shall be certified by the officer; and it must appear by the certificate that the officer, at the time of the acknowledgment, read and fully explained the transfer, assignment, or warrant of attorney to the person acknowledging the same. The provisions of this section shall not apply to payments for rent of post-office quarters made by post-masters to duly authorized agents of the lessors. (31 U.S.C. 203)

(b) *Assignment of Claims Act of 1940.* In 1940 by the enactment of the Assignment of Claims Act (Public No. 811, 76th Congress) the restrictions created by sections 3477 and 3737 of the Revised Statutes referred to in § 81.320 (a) were, subject to certain conditions therein specified, made inapplicable to any case in which monies due or to become due under a contract providing for payments aggregating $1,000 or more, are assigned to a bank, trust company, or other fi-

nancing institution including any Federal lending agency.

(c) *Assignments by operation of law.* It has been held that the provisions of sections 3477 and 3737 of the Revised Statutes, do not apply where a contract or claim is transferred by order of a court in receivership or bankruptcy proceedings, such an assignment, being by operation of law. (See 3 Comp. Gen. 623; 5 id. 492.)

(d) *Transfer of entire business.* It has been held that where an individual or corporation having a contract with or claim against the Government sells an entire business to another individual or corporation, the transferee will be recognized by the United States as the lawful successor in interest of the contractor or claimant notwithstanding the provisions of sections 3477 and 3737 of the Revised Statutes, referred to above. (9 Comp. Gen. 72, 74)

(e) *Corporate mergers.* It has likewise been held that the provisions of section 3477 of the Revised Statutes are inapplicable to the transfer of a claim against the United States resulting from the merger of one corporation into another. (Seaboard Airline Railway v. U. S., 256 U. S. 655)

(f) *Recognition of assignments prohibited by Revised Statutes.* Assignments or transfers of contracts and claims prohibited by sections 3477 and 3737 of the Revised Statutes are merely voidable and may be validated by the Government. Authority to validate such assignments or transfers is vested in the Director, Purchases Division, Headquarters, Services of Supply. (Op. J. A. G., March 9, 1942)

(g) In connection with the assignment of claims, contracting officers will, upon request of the contractor, furnish proposed assignees information regarding the status of the contract at the time of the assignment. In so doing, the contracting officer will advise the assignee that the information is so furnished only for confidential use in connection with the assignment.

§ 81.318b *Telegraph charges in cost-plus-a-fixed-fee contracts*—(a) *General.* Under date of May 5, 1941, (Docket 6257) the Federal Communications Commission affirmed the position of the War Department that cost-plus-a-fixed-fee contractors are entitled to send official telegrams at Government rates. This order has been clarified by the Commission so as to require the telegraph companies to render separate bills covering service since May 1, 1942, for each contract and at Government rates. Government rates on telegrams are fixed annually by order of the Federal Communications Commission. The Commission Order No. 98, dated May 26, 1942, covers the fiscal year July 1, 1942 to June 30, 1943.

(b) *Cost-plus-a-fixed-fee subcontracts executed under cost-plus-a-fixed-fee prime contracts.* The principle of the ruling of the Federal Communications Commission referred to in paragraph (a) of this section is regarded as extending to cost-plus-a-fixed-fee subcontracts executed under cost-plus-a-fixed-fee prime contracts.

(c) *Procedure.* The following procedure for the handling of such messages at Government rates is prescribed for the guidance of Procurement Agencies administering cost-plus-a-fixed-fee contracts and cost-plus-a-fixed-fee subcontracts executed under cost-plus-a-fixed-fee prime contracts:

All telegrams sent by contractors and subcontractors or their representatives which are necessary in connection with such cost-plus-a-fixed-fee contracts or subcontracts will bear a certificate signed by an authorized officer, employee or agent of the United States as follows:

I certify that this message is on official business, is necessary in the public service, and will be paid by check on the Treasury of the United States from United States Funds.

Monthly invoices for telegrams must be certified and verified by the contractor or subcontractor, as the case may be. The contracting officer or his representative will certify and verify the invoices as being proper charges under the particular contract. If in proper order and rendered in accordance with provisions of paragraphs (a) and (b) of this section, such telegrams will be paid by check on the Treasurer of the United States directly by a disbursing officer of the War Department. Such bills should not be sent to the Signal Corps for audit or payment. Invoices covering Government messages not submitted by the contractor or subcontractor at Government rates or not otherwise in proper form will be returned to the contractor or subcontractor for correction.

The Comptroller General has ruled that where direct payment is made by the Government to the telegraph companies for telegrams sent in connection with cost-plus-a-fixed-fee contracts, certified copies of such telegrams may be submitted in support of the invoices in lieu of submitting the original messages, as required by §§ 35.1–35.4 and AR 35–6100,[1] and the vendor's certificate provided for by §§ 35.17–35.21 and AR 35–1040[2] will not be required, provided that the invoices are certified and verified both by the contractor and the contracting officer or his representative as being proper charges against the contract work.

In the absence of the originals of outgoing messages in connection with such contracts, all services are directed to exercise due caution to avoid duplication of payments for such messages.

§ 81.318c *Cable and radio messages in cost-plus-a-fixed-fee contracts.* Cable and radio messages sent by cost-plus-a-fixed-fee contractors, or their representatives, pertaining to cost-plus-a-fixed-fee contracts will also be paid for directly by the Government, and the procedure outlined in § 81.318 (c) will be followed in handling and in paying for such messages when transmitted by telegraph companies.

[1] Administrative regulations of the War Department relating to payments for telephone and telegraph service.

[2] Administrative regulations of the War Department relating to vouchers pertaining to money accounts.

CONTRACT APPEALS

§ 81.318d *War Department Board*—(a) *General.* By memorandum of the Secretary of War, dated August 8, 1942, there was constituted in the Office of the Under Secretary of War a board to be known as "War Department Board of Contract Appeals". The board is hereinafter referred to as "the Board". The Board consists of three members, one of whom is designated as President of the Board. There is also a recorder. The President of the Board and the recorder are required to be persons trained in the law. The Under Secretary of War recommends appointees for membership on the Board and for the position of recorder, and nominates the President of the Board. Appointments are made by the Secretary of War. If the Under Secretary of War at any time determines that additional members of the Board are necessary in order to process appeals with reasonable despatch, he may from time to time recommend for appointment such additional members of the Board as he deems necessary, and may make recommendations for the filling of any vacancies on the Board and in the office of the recorder. Upon request of the Under Secretary of War, The Judge Advocate General is authorized to assign to the Board one or more judge advocates as trial attorneys or examiners; and if and when deemed necessary by the Under Secretary of War and upon his request, The Judge Advocate General may also assign a judge advocate as general counsel.

(b) *Types of contracts, appeals from which may be taken.* In general, contracts contain two types of "disputes" clauses under which appeals may be taken. Some specifically authorize the Secretary of War to appoint as his authorized representative either individuals or "a board". (See § 81.326.) Others do not specifically authorize the appointment of "a board". Contracts containing clauses specifically authorizing the designation of "a board" are referred to in the succeeding paragraphs as "contracts containing the standard clause". Contracts containing clauses not specifically authorizing the designation of "a board" are hereinafter referred to as "contracts containing the nonstandard clause".

(c) *Appeals under contracts containing standard clause.* In the case of contracts containing the standard clause, appeals from decisions of contracting officers or other authorities (including the chiefs of the supply services) will be heard, considered and decided by the Board acting as the duly authorized representative of the Secretary of War, as fully and finally as the Secretary of War might do.

(d) *Appeals under contracts containing the nonstandard clause.* In the case of contracts containing the nonstandard clause, appeals from decisions of contracting officers or other authorities (including the chiefs of the supply services) will be heard and considered by the Board which will report its views on such appeals to the President of the Board. The President, as the authorized representative of the Secretary of War, will then make the decision, as fully and

finally as the Secretary of War might do, unless he shall not be in accord with the decision of the Board, in which case he will promptly submit the case for final determination upon the record to the Under Secretary of War. The latter will then make the decision as the duly authorized representative of the Secretary of War for that purpose.

(e) *Functioning of Board.* The President of the Board from time to time may divide the Board into divisions of one or more members and assign members to such divisions. A majority of the members of the Board or of a division thereof shall constitute a quorum for the transaction of the business of the Board or of a division respectively; and the decision of a majority of the members of the Board or of a division shall be deemed to be the decision of the Board or of the division as the case may be. If a majority of the members of the division is unable to agree on a decision, or if within thirty days after a decision by a division the Board or the President thereof directs that the decision of the division be reviewed by the Board, the decision will be so reviewed; otherwise the decision of a majority of the members of the division shall become the decision of the Board. If a majority of the members of the Board is unable to agree upon a decision, the President of the Board will promptly submit the appeal to the Under Secretary of War for his decision upon the record. The Under Secretary of War is designated as the authorized representative of the Secretary of War for that purpose. A vacancy in the Board or in any division thereof shall not impair the powers nor affect the duties of the Board or division nor of the remaining members of the Board or division, respectively. The authority and procedure specified in this paragraph shall apply whether the Board be acting as the duly authorized representative of the Secretary of War under paragraph (c) of this section or in an advisory capacity under paragraph (d).

(f) *Taking testimony.* Any member of the Board or any examiner designated by the President of the Board for that purpose may hold hearings, examine witnesses, receive evidence, and report the evidence to the Board or, if the case is pending before a division, to the appropriate division.

(g) *Powers of Board.* The Board has all powers necessary and incident to the proper performance of its duties and has the power with the approval of the Under Secretary of War to adopt its own methods of procedure and rules and regulations for its conduct and for the preparation and presentation of appeals. These rules and regulations are set forth in § 81.318e (a) to (l).

(h) *Place for holding hearings.* The office of the Board is in the office of the Under Secretary of War but hearings also may be held in such other places as the Board determines to be expedient or necessary for the proper performance of its duties.

(i) *Procedure.* The Board fixes the times when and places where hearings will be held, and serves notice thereof. The parties or their representatives are entitled to be heard and introduce evidence; provided that if a transcript of the evidence taken at a hearing in the office of the chief of a supply service accompanies the record, the Board may limit the testimony before it to matters not disclosed by the transcript.

(j) *Correspondence.* All correspondence pertaining to appeals to the Secretary of War is to be referred to and conducted by the Board.

§ 81.318e *Rules and regulations of Board.* The rules and regulations promulgated by the Board, and approved by the Under Secretary of War, under date of September 25, 1942, are set forth in paragraphs (a) to (l) of this section. A form of notice of appeal is set forth in paragraph (m). As said rules and regulations of such form are amended by the Board from time to time, these paragraphs will be amended to conform.

(a) RULE I. *General matters.* 1. *Correspondence.* All correspondence with the Board shall be addressed "War Department Board of Contract Appeals, Office of the Under Secretary of War, Washington, D. C."

a. Channels of communication. The president, any member of the Board, and the recorder thereof are authorized to correspond directly, without regard to the usual channels of communication, with any officer or other person within or without the Army, the War Department, the Ground Forces, the Services of Supply, or the Army Air Forces, relative to any information desired by the Board, or in connection with any matters pertaining to the business of the Board. Any information obtained from such correspondence shall not be used as evidence at the hearing on any appeal without first having been submitted to the parties to the appeal.

b. Letters. Letters advising the appellant or other party to an appeal of the final decision of the Board on any appeal and any further correspondence regarding the appeal, including letters to the Comptroller General, may be signed by the president or recorder of the Board.

c. Transmission of papers. The president of the Board or the recorder thereof, by direction of the Board, is authorized to transmit directly to the chief of any supply service concerned, for appropriate action, any papers, documents, or other data pertaining to any appeal that may come to the Board, which the chief of such service is authorized under the terms of the contract finally to determine or to determine subject to appeal to the Secretary of War.

d. Routing of correspondence. All papers pertaining to appeals to the Secretary of War under War Department contracts, received in the War Department or any agency thereof, or any supply service, shall be transmitted directly to the War Department Board of Contract Appeals, except as provided in Rule II.

2. *Form, size and number of papers filed.* Appeals, notices, motions, applications, stipulations, briefs, depositions, and other papers, if typewritten, filed with the Board shall be typewritten on one side of the paper only, with margin of 1½ inches on the left of the page, and, as far as practicable, shall be upon paper 8½ x 11 inches in size. The papers shall be fastened on the left side without covers or backs. Six copies of each of such papers, whether typewritten or not, except stipulations and depositions, shall be filed.

3. *Number to be assigned to proceedings.* The recorder shall assign a number to each appeal coming before the Board, which number will be placed on all papers in the case.

4. *Amendments.* The Board may, in its discretion, allow any paper to be amended or corrected or any omission therein to be supplied.

5. *Service of papers.* Service of papers in all hearings, investigations, and proceedings pending before the Board may be made personally, or by mailing the same in a sealed envelope, registered, return receipt requested, with postage prepaid, adressed to the party upon whom service shall be made, and the date of the registry receipt shall be the date of service. Waiver of the service of any paper may be noted thereon or on a copy thereof, or on a separate paper, signed by the parties or their attorneys and filed with the Board. When any party has appeared by attorney, service upon the attorney will be deemed proper service upon such party.

6. *Substitution of parties.* In the event of the death of an appellant, or for other cause, including a change in the name of a corporation or other party or the succession of one party to the functions or interests of another, or in the event of a mistake in the name or title of a proper party, the Board may order substitution of the proper name or title.

7. *Motions for substitution.* All motions for substitution shall be accompanied by pertinent documentary evidence, unless the parties by stipulation filed with the Board agree to the substitution.

8. *Matériel Comand, Army Air Forces.* The term "supply services", as used in these rules, includes the Matériel Command, Army Air Services; and the term "chiefs of the supply services" includes the Commanding General, Matériel Command, Army Air Forces.

(b) RULE II. *Proceedings preliminary to hearings.* 1. *Appeals, how taken.* *a.* An appeal from the decision of a contracting officer and an appeal from the decision of the chief of a supply service must be in writing, filed with the officer from whose decision the appeal is taken, within the time allowed by the contract, unless for good cause shown, the board shall determine to consider the appeal on its merits, notwithstanding it was not filed within the time allowed by the contract.

b. Form of appeals. Each appeal shall state the particular provisions of the contract out of which the dispute arises; the exact nature of the dispute and the ruling of the contracting officer or other authority from which the appeal is taken, together with a statement of specific facts claimed by the appellant to sustain his position. If the appeal is insufficient in these respects it may be returned for appropriate amendment. The appeal should follow, substantially, the form annexed to these rules and must be signed and sworn to by the appellant. Six copies of the appeal should be filed.

2. *Time of filing to be endorsed.* When the appeal has been received by the contracting officer or the chief of a supply service, as the case may be, he will endorse thereon the date of filing and forward the appeal, as hereinafter provided.

3. *Findings of fact and decisions.* *a.* In rendering a decision on any dispute involving a question of fact, the contracting officer or the chief of a supply service, as the case may be, shall prepare and sign findings of fact, a true copy of which with his written decision, shall be promptly furnished the contractor; and in case of appeal, the officer from whose decision the appeal is taken shall forward a true copy of such findings and of the decision, as hereinafter provided.

b. Forwarding by contracting officer. When an appeal is taken from the decision of a contracting officer he shall promptly forward to the chief of service concerned, a true copy of his findings of fact and of his decision; the original written appeal and the required copies thereof; a transcript of any evidence taken by him; and all pertinent papers in the case.

c. Forwarding by Chiefs of Supply Services of appeals from decisions of contracting officer. (1) If the appeal from the contracting officer's decision is to the Secretary of War, the chief of the supply service receiving the appeal will exercise the utmost care to see that the record is complete as required by these rules and regulations; will add to the file, if not already in it, an original duplicate or true copy of the contract, including the plans and specifications and all changes and supplemental agreements; and shall promptly forward the complete file to the War Department Board of Contract Appeals.

(2) If for any reason the complete file cannot be so forwarded within five days from the date the appeal is received, the chief of the supply service will report to the War Department Board of Contract Appeals the date on which the appeal was received in his office and the reason for the delay in forwarding the file.

(3) It will be unnecessary, hereafter, for the chiefs of the supply services to furnish the reports required by paragraph 7, of P & C General Directive No. 72, of November 7, 1941.

4. *Forwarding appeals from chiefs of services.* The chief of a supply service, within five days after the receipt of a written appeal from his decision, will forward the original written appeal and the required copies thereof to the War Department Board of Contract Appeals, together with the following papers: a copy of his findings of fact and decision; the advisory report, if there be one, of the contract settlement board in his office; a transcript of any testimony taken during the course of the proceedings; a duplicate original or a certified copy of the contract, including the plans and specifications and all changes and supplemental agreements; the findings of fact and decision of the contracting officer; and all papers and correspondence pertaining to the contract, pertinent to the consideration of the appeal.

5. *Appeals improperly filed.* If any officer or agency of the War Department should receive a written appeal which has not been filed as provided in paragraph (1) of this rule, the recipient shall, after endorsing thereon the date of its receipt, immediately transmit the appeal to the chief of the supply service concerned:

a. For appropriate action as provided in paragraph 4, of this rule, if the appeal is from the decision of such chief; or

b. If the appeal is from the decision of a contracting officer, then for transmission to the contracting officer for action as required by paragraphs 3*a.* and 3*b.* of this rule.

6. *Calls for papers, documents and information.* After an appeal has been filed, the Board, or any member thereof, or any person designated by the Board for that purpose, may call for the production of any papers, documents, or specific information in the possession of any of the parties, relevant to the dispute out of which the appeal arises.

(c) RULE III. *Hearings.* 1. *Where held.* Hearings shall be held at the office of the Board unless otherwise directed by the Board.

2. *Notice of hearings.* *a.* The appellant and the representative of the Government shall be given at least 10 days notice of the time and place of hearing.

b. Continuances will not be granted except upon written motion and for good cause shown.

3. *Request for hearing at place other than office of the Board.* If the appellant shall desire that a hearing be held at a place other than the office of the Board, he shall at the time of taking his appeal, or within a reasonable time thereafter, but before service of notice of hearing, make a request therefor, showing the name of the place where he would prefer the hearing to be held, and stating fully the reason for such request. The representative of the Government may, within 10 days after an appeal has been filed in the office of the Board, file with the Board a request for hearing at a place other than the office of the Board and shall in such request state fully the reasons therefor. If neither the appellant nor the representative of the Government request a hearing at a place other than at the office of the Board, the Board may, nevertheless, on its own motion hold a hearing at another place.

4. *Stipulating facts.* The appellant and the representative of the Government may, by stipulation in writing filed with the Board, agree upon the facts or any portion thereof involved in the appeal, which stipulation shall be regarded and used as evidence at the hearing. However, the Board may, in such case, require additional evidence.

5. *Limiting testimony.* Where there is a transcript of testimony taken in the office of the chief of any supply service, the Board may, in its discretion, limit the testimony before it to testimony relative to matters not disclosed by the transcript. In all cases the Board may limit the amount of testimony, where merely cumulative.

6. *Submission on the record to the Under Secretary of War.* Where a majority of the members of the Board are unable to agree upon a decision, and the matter is submitted on the record to the Under Secretary of War for final determination, ordinarily, no further testimony will be introduced. However, the Under Secretary of War may, in his discretion, direct that additional testimony be taken before the Board, a division thereof, or before such person as he may dsignate, or he may direct a re-hearing before the Board, or reconsideration by the Board.

7. *Absence of parties or counsel.* The unexcused absence of a party or his counsel at the time and place set for the hearing of any proceeding will not be the occasion for delay, but the hearing will proceed and the case will be regarded as submitted on the part of the absent party or parties.

8. *Limitation of argument.* Oral argument before the Board or any division thereof may be limited by the Board or by the division, respectively.

9. *Briefs.* The parties may file briefs in lieu of personal appearances or in connection therewith. All briefs will be filed within 20 days after conclusion of the hearing unless otherwise directed by the Board or by the division before which the appeal is pending.

10. *Oral examination of witnesses.* Witnesses before the Board or any division thereof or before any member or examiner will be examined orally under oath, unless the facts are stipulated or the Board or division thereof shall otherwise order.

(d) RULE IV. *Evidence.* 1. *Copies of papers.* When books, records, papers, or documents have been received in evidence, a true copy thereof or of such part thereof as may be material or relevant may, in the discretion of the Board or of the division holding the hearings, be substituted therefor.

2. *Withdrawal of exhibits.* After a decision has become final, the Board may, upon motion, permit the withdrawal of original exhibits, or any part thereof, by the party entitled thereto, or may, on its own motion, make such other disposition thereof as it deems advisable.

3. *Administration of oaths.* Any judge advocate or acting judge advocate, the president, any member or the recorder of the Board, or any officer detailed to conduct an investigation, or hold a hearing, may administer oaths to witnesses.

4. *Ex parte affidavits not evidence.* Statements in the petition, ex parte affidavits, and briefs do not constitute evidence.

(e) RULE V. *Depositions.* 1. *Before whom taken.* *a. Depositions to be read in evidence* before the Board or any division thereof may be taken before and authenticated, by any officer, military or civil, authorized by the laws of the United States or by the laws of place where the deposition is taken, to administer oaths.

b. Form and return of deposition to Board. Each deposition shall show the docket number and the caption of the proceeding, the place and date of taking, the name of the witness, and the party by whom called. The officer taking a deposition shall enclose the original deposition and exhibits, in a sealed packet, with postage or other transportation prepaid, and direct and forward the same to the War Department Board of Contract Appeals, Office of the Under Secretary of War, Washington, D. C.

2. *Notice to take, or stipulation for taking.* When either party desires to take a deposition, unless the parties shall stipulate as to the time when and place where the deposition is to be taken and the name of the officer before whom it is to be taken and the name and address of the witness, such party shall give to the opposite party at least 10 days notice of the time when and the place where such deposition will be taken and the name and address and official title of the officer before whom it is proposed to take the deposition, as well as the name of the witness. A deposition may be taken either upon written interrogatories or upon oral examination, as may be specified in the notice. If the deposition is to be taken upon written interrogatories, copies thereof shall accompany the notice to take depositions. If the opposite party desires to submit cross interrogatories, same must be served upon the party giving the notice within 5 days from the receipt of the notice to take the deposition, or within such further time as may be allowed by the Board. In order to avoid the taking of depositions or to avoid a continuance for the purpose of taking the testimony of any witness, the parties may stipulate what the testimony of the witness would be if present, and such stipulation shall be received in evidence by the Board.

3. *Reason for taking.* A duly authenticated deposition may be read in evidence before the Board, if such deposition be taken when the witness resides, is found, or is about to go beyond the state, territory, or district in which the Board or a division thereof is to hold a hearing, or beyond the distance of 100 miles from the place of hearing or when it appears to the satisfaction of the Board or a division thereof, that the witness by reason of age, sickness, bodily infirmity, imprisonment, or other reasonable cause is unable to appear and testify in person at the place of hearing.

4. *Deposition not considered until offered.* *a. Testimony taken by deposition* will not be considered until offered and received in evidence.

b. Introduction of deposition by opposite party. A deposition taken by one party may be introduced by the opposite party, but the whole deposition must be offered unless otherwise stipulated by the parties, or directed by the Board or by the division hearing the appeal.

(f) RULE VI. *Decisions and findings.* 1. *Copies to be served on parties.* Decisions and findings of the Board, including decisions of any division thereof which have become decisions of the Board, including findings on questions of fact, shall be certified under the seal of the Board and served upon the parties or their attorneys in the manner herein provided for the service of papers.

2. *Divisional opinions.* A copy of each opinion of a division shall be promptly furnished by the division to each member of the Board, and if a majority of the members of the Board, including the president, shall at any time within 30 days after the date of the decision by the division file with the recorder a statement in writing to the effect

that they do not desire a review of the decision by the Board, the recorder will make an entry in the records of the Board to that effect as of the date on which a majority of the members of the Board shall have filed such statements. Thereupon the decision of the division shall become the decision of the Board, and the recorder will promptly furnish copies of the decision to the parties concerned.

(g) RULE VII. *Representation. a. Qualifications of attorneys.* Any appellant may be represented before the Board by an attorney at law who has been admitted to practice and who is in good standing, before the Supreme Court of the United States, or before the highest court of any State, Territory, possession or the District of Columbia. The Board may, in its discretion, require any person appearing as an attorney at law, to present to the Board evidence that he or she possesses the above qualifications. The statement of the attorney may be accepted as satisfying the requirement of this rule.

b. Representation in lieu of counsel. Any individual appellant may appear for himself. Any partnership appellant may be represented by one or more partners. Any corporate appellant may be represented by a bonafide officer of the corporation.

(h) RULE VIII. *Transcript of proceedings.* 1. *Record of hearings.* A full and complete record shall be kept of all hearings before the Board or any division thereof.

2. *Testimony to be taken stenographically.* The testimony shall be stenographically reported, and transcripts thereof shall be made, if in the opinion of the Board or of the division holding the hearing, a permanent record of the testimony is deemed necessary. Transcripts shall be supplied to the parties and to the public by the official reporter at such rates as may be fixed by contract between the Board and the reporter.

(i) RULE IX. *Rehearings. a. Applications for rehearings, etc.* Either party may apply to the Board for a rehearing, or reconsideration as to any matter determined by the Board, and to a division of the Board as to any matter determined by that division. Rehearing, further hearing or reconsideration of a decision, may be had, if in the judgment of the Board or of the members of the division in which the decision was rendered, as the case may be, sufficient reason therefor be made to appear.

b. Motions for. All motions for rehearing, or reconsideration shall set forth specifically the ground or grounds relied upon to sustain the motion, and must be filed within 10 days from the date of the service of a copy of the decision of the Board or of a division, respectively, upon the party filing the motion. All such motions will be determined upon the record and briefs submitted and without oral argument or additional evidence.

(j) RULE X. *Computation of time. Sundays and legal holidays to be counted.* Whenever these rules or any order of the Board prescribe a time within which any act may be performed, Sundays and legal holidays in the District of Columbia shall count the same as other days, except that then the time prescribed for the performance of an act expires on a Sunday or a legal holiday in the District of Columbia, such time shall extend to and include the next succeeding day that is not a Sunday or such a legal holiday: *Provided,* That when the time for performing any act is prescribed by statute, nothing in these rules shall be deemed to be a limitation or extension of the statutory time period.

(k) RULE XI. *Coordination with price adjustment board.* 1. *Notice to Price Adjustment Board.* Upon the filing of an appeal with the Board, the recorder thereof will promptly advise the War Department Price Adjustment Board of the pendency of the appeal, giving the name of the contractor, the contract number, the name of the contracting officer or other authority from whose decision the appeal has been taken, together with a copy of the appeal or a brief statement of the issues involved.

2. *Information regarding renegotiation.* Prior to any hearing, the Board will ascertain from the War Department Price Adjustment Board, whether any renegotiation agreement has been accomplished relating to the contract under which the appeal is pending or whether renegotiation proceedings relative to the contract are pending. If a renegotiation agreement has been entered into such agreement will be taken into consideration by the War Department Board of Contract Appeals in reaching its decision. If renegotiation proceedings are pending the Board may, in its discretion, suspend further proceedings on the appeal until the renegotiation proceedings have been concluded. A copy of each decision rendered by the Board will be furnished the War Department Price Adjustment Board.

(l) RULE XII. *Effective date.* These rules shall become effective from the date of their approval by the Under Secretary of War, and from time to time may be amended by the Board with such approval.

(m) *Form of notice of appeal.*

Appeal of _____ Under
(Contractor)
Contract No. _____ B.C.A. No. _____
To The Secretary of War:

The undersigned contractor under the contract referred to above, hereby appeals to the Secretary of War from the decision of the _____
(here insert the name and title of the contracting officer, or the name and title of the chief of the supply service, as the case may be)
rendered on the _____ day of _____, 19__, wherein it was ruled:

_____
(here insert the specific ruling from which the appeal is taken)

That said ruling was erroneous and that the undersigned contractor is aggrieved thereby, for the following reasons:

That the dispute arises out of the following provisions of the contract:

_____
(here insert pertinent contract provisions)

That the facts which sustain appellant's position are as follows:

_____
(here state specific facts upon which the claimant relies to sustain the appeal)

That the dispute out of which the appeal arises has not been disposed of by mutual agreement, although appellant has made an effort to that end.

This appeal is made pursuant to Article____ of the contract.

That the postoffice address of appellant is as follows:

Dated at _____ this _____ day of _____ 19__

_____
(Contractor, appellant)
By _____
(Title of officer if a corporation, or the word "partner", if a partner signs for a partnership)

Form of verification where petitioner is an individual:

STATE OF_____ }
COUNTY OF_____ } ss.

_____, being first duly sworn upon his oath deposes and says that he is the appellant referred to above; that he has read the foregoing and knows the contents thereof, and that the facts therein stated are true of his own knowledge except as to matters which are therein stated on information or belief; and that as to those matters he believes the statements to be true.

_____

Subscribed and sworn to before me this____ day of _____, 19__

_____
Notary Public in and for the county of_____, state of _____

Form of verification where appellant is a corporation:

STATE OF_____ }
COUNTY OF_____ } ss.

_____, being first duly sworn upon his oath deposes and says, that he is the _____ of the above-named corporation, appellant; that he is authorized to make this oath for and on its behalf; that he has read the foregoing instrument, knows the contents thereof, and that the facts stated therein are true of his own knowledge, except as to matters which are therein stated on information or belief, and that as to those matters he believes the statements to be true.

_____

Subscribed and sworn to before me this _____ day of _____, 19__

_____
Notary Public in and for the county of _____, state of _____

Form of verification where the petitioner is a partnership:

STATE OF_____ }
COUNTY OF_____ } ss.

_____, being first duly sworn upon his oath deposes and says that he is a member of the above-named partnership, appellant; that he has read the foregoing instrument, knows the contents thereof, and that the facts therein stated are true of his own knowledge, except as to matters which are therein stated on information or belief, and that as to such matters, he believes the statements to be true.

_____

Subscribed and sworn to before me this _____ day of _____, 19__

_____
Notary Public in and for the county of _____, state of _____

If the appellant is represented by an attorney give his name and address.

§ 81.318f *Appeals boards within the supply services*—(a) *General.* There should exist in each supply service, a board to act as an advisor to the chiefs of the supply services with respect to appeals under contracts which authorize the chiefs of the supply services to pass upon appeals either finally or subject to further appeals by the contractor to the Secretary of War.

(b) *Organization of Boards.* Each Board should consist of at least three members. One member of the Board, preferably with legal training, should be designated as executive secretary, to maintain a calendar of such cases as may be appealed to the chief of the service; to make a preliminary analysis of each case, and if necessary, return the file for further evidence, papers or exhibits; to maintain a record of the progress of each case; and in general, to act as executive representative of the Board and of chief of the supply service with respect to such matters. The Under Secretary of War will be informed of the name and address of every such executive secretary. Unless the chief of any supply service considers the volume of such work to be sufficient to require the full-time services of such executive secretary or other board members, they should be directed to perform such services in addition to other duties.

(c) *Procedure.* In order that a uniform and orderly procedure may be followed, the following steps are prescribed in each case. The Board should:

(1) Investigate and determine the facts in each case. During each such investigation, an opportunity should be afforded to the contractor, if he desires it, to present evidence in support of his contentions.

(2) Arrive at a finding of all essential facts and prepare a statement thereof for the information of the chief of the supply service concerned, and of the Under Secretary of War in cases forwarded to him for disposition. In the latter cases the report of the Board, together with the recommendation of the chief of the supply service concerned and the complete files in the case, will be forwarded to the Under Secretary of War.

(3) Based upon these findings of fact, prepare any necessary correspondence, supplemental agreements, or other documents for the action of the persons concerned.

(d) In the determination of disputes, it will be the policy of all concerned to do complete and fair justice to the legitimate claims and contentions of every contractor, subject, however, to the limitation that in the absence of specific statutory authority no officer or official of the United States is vested with any power to surrender without consideration to the United States, any asset or right of the United States; every such officer and official must be controlled by the express terms of the contract in question and the applicable statutes and regulations.

(e) The recommendations of the boards in question will be advisory only; the chief of the supply service concerned will not be bound by any such recommendation.

GUARANTEES, LOANS AND COMMITMENTS, AND ADVANCE PAYMENTS

§ 81.319 *General*—(a) *War Department policy.* It is the policy of the War Department that, in general, guarantees of loans, not in excess of 90 per cent of the principal amount of the loan, are to be employed rather than direct loans or participations in loans; and that likewise, guarantees of loans are, in general, to be employed in preference to advance payments. It is not intended entirely to supplant advance payments, especially where the supply service concerned concludes that the negotiation or performance of a particular contract will be facilitated by the use of advance payments.

(b) *Policy in connection with prime contractors.* Guaranteed loans to a prime contractor are particularly preferable to advance payments to such a contractor in the following situations:

(1) Where a number of supply services are involved,

(2) Where the prime contractor is at the same time a subcontractor under other prime contracts,

(3) Where the prime contractor has contracts with several branches of the government,

(4) Where the prime contractor has a large number of contracts and purchase orders.

In the above situations, guaranteed loans avoid the difficulties of segregation, accounting and supervision which are inherent in advance payments.

(c) *Policy in connection with subcontractors.* Guaranteed loans to subcontractors are preferable to subadvances even though the guarantee may exceed 90 per cent of the principal amount of the loan.

(d) *Cooperation with liaison officers.* The closest cooperation should exist between contracting officers, liaison officers (see § 81.320 (d)), and the Federal Reserve Banks, from the time negotiations for an award of a prime contract commence. Only in this way can there be devised the most practical method of financing from the standpoint of maximum war production by the contractor. In a given case, the most practical method of financing may be (1) private financing, (2) a guaranteed loan, (3) advanced payments, or (4) a direct Government loan; if a guaranteed loan or a direct loan, it may or may not be policed as to expenditures by the supply service most interested. That method of financing which is most conducive to maximum production should be adopted by mutual agreement between the contracting officer and the liaison officer, and it shall be the function of the liaison officer to endeavor to insure cooperation among the several supply services and with other branches of the Government to this end.

(e) *Determination of method of financing at time of award.* In the case of prime contractors, especially those having contracts with a single supply service, the method of working capital financing most conducive to maximum production should be determined prior to the making of an award. The question of the amount of facilities necessary for such production and the method of financing such facilities should also be determined at that time. To these ends, the fiscal and production branches of procurement officer should closely cooperate both internally and, where appropriate, with the liaison officers and the Federal Reserve Banks.

§ 81.320 *Guarantees, loans and commitments under Executive Order No. 9112*—(a) *Executive Order No. 9112.* Under date of March 26, 1942, Executive Order 9112 (7 F.R. 2367) was issued. It reads in part as follows:

(1) The War Department, Navy Department and the Maritime Commission are hereby respectively authorized, without regard to the provisions of law relating to the making, performance, amendment or modification of contracts, (a) to enter into contracts with any Federal Reserve Bank, the Reconstruction Finance Corporation, or with any other financing institution guaranteeing such Reserve Bank, Reconstruction Finance Corporation or other financing institution against loss of principal or interest on loans, discounts or advances, or on commitments in connection therewith, which may be made by such Reserve Bank, Reconstruction Finance Corporation, or other financing institution for the purpose of financing any contractor, subcontractor or others engaged in any business or operation which is deemed by the War Department, Navy Department or Maritime Commission to be necessary, appropriate or convenient for the prosecution of the war, and to pay out funds in accordance with the terms of any such contract so entered into; and (a) to enter into contracts to make or to participate with any Federal Reserve Bank, the Reconstruction Finance Corporation, or other financing institution in making loans, discounts or advances, or commitments in connection therewith, for the purpose of financing any contractor, subcontractor or others engaged in any business or operation which is deemed by the War Department, Navy Department or Maritime Commission to be necessary, appropriate or convenient for the prosecution of the war, and to pay out funds in accordance with the terms of any such contract so entered into.

* * * * *

(5) The War Department, the Navy Department and the Maritime Commission shall make reports of all contracts entered into by them respectively pursuant to the terms of this executive order, in accordance with the provisions of paragraph 1 of the regulations prescribed in Title II of Executive Order No. 9001 dated December 27, 1941.

(b) *Administration.* The administration of the powers conferred upon the War Department by Executive Order 9112 are vested in the Advance Payment and Loan Branch, Fiscal Division, Headquarters, Services of Supply. The general policies and procedures established by that branch as well as the general contractual arrangements established by the Branch are subject to review by the Director, Purchases Division, Headquarters, Services of Supply.

(c) *Financial contracting officers.* Financial contracting officers are officers or civilian officials attached to the Fiscal Division, Headquarters, Services of Supply who have been granted authority by the director of said division to execute or approve guarantees (either in the form of guarantees to save financial institutions harmless or in the form of commitments to purchase), to make direct Government loans, to enter into other financial arrangements, and to enter into commitments therefor all pursuant to the authority conferred by Executive Order 9112; to participate in negotiations for financing; and to coordinate with the Federal Reserve Banks which act as agents of the War Department in arranging financing for businesses whose operations are necessary, appropriate or convenient for the prosecution of the war.

(d) *Liaison officers.* Liaison officers are officers or civilian officials attached to the Advance Payment and Loan Branch, Fiscal Division, Headquarters, Services of Supply, who have been detailed for duty in every city in which a Federal Reserve Bank is situated as well as in Los Angeles and Detroit. Their functions and duties are those specified in paragraphs (e) and (i) of this section, as well as in various other paragraphs of this section.

(e) *Procedure for obtaining guaranteed loans.* Contractors may make applications for guaranteed loans:

(1) Through a local bank which in turn will transmit the applications to the Federal Reserve Bank in the district where the bank is located,

(2) Directly to the Federal Reserve Bank, or

(3) To a liaison officer.

It will be the duty of the liaison officer to obtain information from the procurement officers of the supply service or services concerned and from other appropriate sources as to whether the applicant's operations (existing or prospective) are necessary, appropriate, or convenient for the prosecution of the war and as to applicant's ability to perform its contracts. When liaison officers are not actually detailed to a given Federal Reserve district, the Federal Reserve Bank will perform this duty. Upon the basis of the information so obtained, the liaison officer will issue a Statement of Necessity. If the liaison officer is not satisfied that the terms and conditions of the loan will expedite production and protect the Government's interest to the fullest extent possible, the Statement of Necessity may be withheld pending the working out of satisfactory terms and conditions.

(f) *Loans and guarantees not requiring submission to the Advance Payment and Loan Branch, Fiscal Division.* Upon the issuance of a Statement of Necessity, a direct Government loan or a guarantee on behalf of the War Department may be completed by a Federal Reserve Bank, acting as fiscal agent of the United States on such terms and conditions as to it may seem advisable, provided that such loan or guarantee must be submitted for approval to the Advance Payment and Loan Branch, Fiscal Division, if it comes within any of the categories set forth in paragraph (g) of this section.

(g) *Loans and guarantees requiring submission to the Advance Payment and Loan Branch.* Direct Government loans and guarantees coming within any of the following categories must be submitted for approval to the Advance Payment and Loan Branch, Fiscal Division, Headquarters, Services of Supply:

(1) All direct Government loans and also all guarantees when the amount thereof plus the amount of all loans and guarantees made pursuant to Executive Order No. 9112 (including Navy Department and Maritime Commission loans and guarantees), which the contractor has then outstanding, exceed $100,000.

(2) All guarantees when the liaison officer and the Federal Reserve Bank disagree as to the terms and conditions thereof.

(3) All guarantees, regardless of the principal amount of the loan, when the guarantee is for an amount in excess of 90 percent of the principal amount of the loan.

(4) All guarantees when the Federal Reserve Bank is itself participating in the loan.

(h) *Execution of loan or guarantee.* If the Federal Reserve Bank does not participate in the loan, the guarantee normally will be executed by the Federal Reserve Bank as fiscal agent of the United States. If the Federal Reserve Bank does participate in the loan, the guarantee will be executed by the financial contracting officer. Direct Government loans will be executed by a financial contracting officer.

(i) *Cooperation of procurement officers.* When it has been determined pursuant to § 81.319 (a) and (d) that a guaranteed loan is the method of financing most conducive to maximum war production, it is essential that the Federal Reserve Bank, the Advance Payment and Loan Branch, the liaison officers, and the financial contracting officers receive the fullest and speediest cooperation from the procurement officers of the various supply services. Procurement officers of the supply services will furnish such information relating to contracts awarded or executed by them, and as to subcontracts and orders under such contracts, as may be called for by the Federal Reserve Bank, the Advance Payment and Loan Branch, liaison officers or financial contracting officers. In order to expedite this cooperation, special units may be established in the district offices of the supply services, or existing Advance Payment Sections may be utilized for this purpose. Information normally required to be furnished will include:

(1) The need for the borrower's production, and

(2) The ability of the borrower to perform from the viewpoint of technical production.

Obtaining information as to the borrower's financial condition is primarily the responsibility of the liaison officer and the Federal Reserve Banks. However, procurement officers of a supply service may supply such information and may make recommendations with respect thereto which will be given due weight provided that the information as to the necessity for the production and the technical ability of the borrower to perform is not delayed.

§ 81.321 *Advance payments*—(a) *General policy.* Subject to provisions of § 81.319 (a) and (c), advance payments will be made to contractors upon their request in all cases where such action will facilitate the prosecution of the war provided that after careful scrutiny it is determined that the national interest will be promoted thereby and provided that the Government will be adequately protected.

(b) *Types of contracts.* Subject to the provisions of paragraph (a) of this section, advance payments may be made in connection with agreements of all kinds (whether contracts, letter contracts, letter purchase orders or other types of agreements).

(c) *Advance payments under contracts executed prior to December 27, 1941.* No advance payment in excess of 30 percent of the amount of the contract will be authorized upon a contract entered into prior to December 27, 1941, except under a supplemental agreement containing provisions for such an advance payment executed on or after December 27, 1941.

(d) *Security.* Advance payments shall be authorized only upon the furnishing of adequate security by the contractor. The security to be furnished will be that required under the provisions of the standard clauses or standard forms of supplemental agreements referred to in paragraph (k) of this section. A guarantee by, or bond of, a parent corporation is desirable if the subsidiary corporation has limited financial responsibility, especially in the case of a newly formed subsidiary corporation. Whether guarantees, subordination agreements or other security devices should be required, in connection with advance payments, is within the discretion of the person having authority to approve the authorization of advance payments. Advance payment bonds will be required only in the most exceptional circumstances. (See § 81.414 (a))

(e) *Definitions.* As used in paragraphs (f), (g), and (n) of this section, the following terms shall have the following meaning:

(1) *The amount of the contract.* In the case of a lump sum contract the contract price; in the case of a cost-plus-a-fixed-fee contract, the estimated cost exclusive of the fixed-fee.

(2) *Standard contract clause.* A contract clause following without substantial deviation the wording of one of the contract clauses referred to in paragraph (k) of this section.

(3) *Standard supplemental agreement.* A supplemental agreement following without substantial deviation the wording of one of the forms of supplemental agreement referred to in paragraph (k) of this section.

The determination of whether there is a substantial deviation from contract clause or from a form of supplemental agreement is within the discretion of the chiefs of the supply services. In general, the determining factor is whether the modification changes established policies with respect to advance payments.

(f) *Initial advance payments not requiring approval of Advance Payment and Loan Branch.* Chiefs of supply services are authorized without obtaining the approval of the Advance Payment and Loan Branch, Fiscal Division, Headquarters, Services of Supply, to approve the authorization and making of initial advance payments on contracts pertaining to their respective services, when:

(1) The amount of the contract is less than $5,000,000 and the amount of the advance payment is not in excess of 50 per cent of the amount of the contract, and

(2) The advance payment is authorized under a standard contract clause or a standard supplemental agreement.

(g) *Subsequent advance payments not requiring approval of Advance Payment and Loan Branch.* The chiefs of the supply services are authorized, without obtaining the approval of the Advance Payment and Loan Branch, Fiscal Division, Headquarters, Services of Supply, to approve the authorization and making of advance payments in addition to advance payments previously authorized in connection with a given contract, when:

(1) The amount of the contract on which the subsequent advance payment is based is less than $5,000,000 and the proposed advance payment does not exceed 50 per cent of such amount, and

(2) The proposed advance payment is authorized under an approved contract clause or an approved supplemental agreement. As used in this paragraph

the term "amount of the contract on which the subsequent advance payment is based" means the amount by which the amount of the contract has been increased since the date of the last authorization of an advance payment.

(h) *Advance payments requiring approval of Advance Payment and Loan Branch.* Unless an advance payment comes within the provisions of paragraph (f) or (g) of this section, the authorization of such advance payment must be submitted for approval to the Advance Payment and Loan Branch, Fiscal Division, Headquarters, Services of Supply. The submission to said Branch will consist of a recommendation of the chief of the supply service concerned, together with the following information:

(1) The amount proposed to be advanced.

(2) The amount of contract involved and the subject matter whereof.

(3) Whether the contract was awarded on a fixed price or on a cost-plus-a-fixed-fee basis.

(4) The terms of the proposed advance (including method and time of repayment or liquidation including, if possible, a schedule of deliveries).

(5) The national interest in making the advance.

(6) The security proposed to protect the Government against loss with the definite recommendation of the chief of the supply service as to the adequacy thereof.

(7) The financial position and the general character and responsibility of the contractor as well as the technical ability of the contractor to perform the contract.

(8) A copy of the contractor's letter of request and any financial and budget data submitted relating to the necessity for the advance.

(9) Copy of contracting officer's report, if any, on the advance payment request.

(10) Any other information pertinent to a proper decision in the case.

(11) The date and identifying symbol of the approval of the award together with the appropriation available.

Requests for the approval of the authorization of an advance payment may be presented either during the negotiation of a contract or at any time thereafter. If the contract is available a copy thereof together with applicable letters of intent and intermediate supplemental agreements, if any, should be forwarded together with the recommendation. If a copy of the contract is not available at the time the recommendation is forwarded, such a copy should be submitted for review and filing promptly after execution.

(i) *Special provision with respect to advance payments under open-end provisions in connection with cost-plus-a-fixed-fee contracts.* If in connection with a cost-plus-a-fixed-fee contract, it is proposed to authorize the making of an advance payment in an amount equivalent to a percentage of the estimated cost as the same may be amended from time to time, approval of the Advance Payment and Loan Branch, Fiscal Division, Headquarters, Services of Supply, need not be obtained unless the estimated cost of the contract exclusive of the fixed-fee at the time of the granting of such authorization is $5,000,000 or more (provided, of course, that the authorization is made under a standard contract clause or a standard supplemental agreement). If, however, it subsequently becomes apparent that the cost will be $5,000,000 or more, no further advances will be made under such authorization until such approval has first been obtained. If such approval has once been obtained, the making of advance payments, in addition to those made prior to or at the time of such approval, may be made without further approval of the Advance Payment and Loan Branch, regardless of the amount of such additional advance payments.

(j) *Advance payments in connection with letter contracts or letter purchase orders.* Advance payments in connection with letter contracts or letter purchase orders will be provided for by a standard supplemental agreement. There should be included in such agreement a clause relieving a subsequent performance surety of the fidelity risk involved in making advance payments in any case where it is contemplated that a performance bond will be required in connection with the more formal contract and where no advance payment bond has been required.

(k) *Forms of supplemental agreement and contract clauses.* The following is a list of contract clauses and forms of supplemental agreements for use in connection with the authorization of advance payments:

(1) The contract clause contained in § 81.347 will be used in providing for advance payments with interest on fixed-price contracts.

(2) War Department Contract Form No. 20 will be used in executing a supplemental agreement for advance payments with interest on fixed-price contracts. (See § 81.1320.)

(3) War Department Contract Form No. 21 will be used in executing a supplemental agreement for advance payments with interest on cost-plus-a-fixed-fee contracts. (See § 81.1321.)

(4) War Department Contract Form No. 22 will be used in executing a supplemental agreement for advance payments with interest on a letter purchase order. (See § 81.1322.)

(5) The contract clause contained in § 81.348, will be used in providing for advance payments without interest on fixed-price contracts.

(6) War Department Contract Form No. 23 will be used for executing a supplemental agreement for advance payments without interest on fixed-price contracts. (See § 81.1323.)

(7) War Department Contract Form No. 24 will be used for executing a supplemental agreement for advance payments without interest on cost-plus-a-fixed-fee contracts. (See § 81.1324.)

(8) War Department Contract Form No. 25 will be used for executing a supplemental agreement for advance payments without interest on letter purchase orders. (See § 81.1325.)

(l) *Interest.* Except as set forth in paragraph (m) of this section, whenever an advance payment is made to a contractor by the War Department, a charge should be made for the use of the Government money so furnished. The charge should be in the nature of an interest charge computed, at convenient accounting periods, at the rate of two and one-half per cent per annum on the unliquidated balance of advance payments outstanding from time to time. In the case of a fixed-price contract, the amount of the charge should be deducted from payments under the contract. In the case of a cost-plus-a-fixed-fee otherwise payable to the contractor, and should not be an item of reimbursable cost under the contract.

(m) *Exceptions to interest requirements.* The requirement that interest be charged on advance payments shall not be applicable to advance payments:

(1) Authorized in connection with contracts which provide that the work thereunder shall be performed at cost without profit or fee to the contractor.

(2) Authorized in connection with cost-plus-a-fixed-fee contracts on which the fee is disproportionately small compared to the amount of interest that would accrue on the advance payment;

(3) Authorized in connection with contracts entered into, or contracts the terms of which had been agreed upon, prior to June 8, 1942, to the extent that such application would be inconsistent with the terms upon which such contracts were negotiated; or those

(4) Authorized to be made without interest by specific action of the Director, Fiscal Division, Headquarters, Services of Supply.

(n) *Reports.* In connection with advance payments, the supply services will make the following reports:

(1) *Daily reports.* Each day on which an advance payment is authorized by a supply service there will be submitted by such supply service to the Advance Payment and Loan Branch, Fiscal Division, Headquarters, Services of Supply, a summary record of all advance payments authorized on that day, except those authorized with the approval of said Branch. This will insure a closer control of the financing of contractors, subcontractors and others (whether by guaranteed loans or by advance payments) and will make it possible to maintain at all times a complete record. The report should show the name of the contractor, the number of the contract, the amount of the contract and the amount of the advance authorized.

(2) *Individual advance payment report.* A complete report of each advance payment, except those approved by the Advance Payment and Loan Branch, Fiscal Division, Headquarters, Service of Supply, pursuant to paragraph (h) or (i) of this section, will be submitted to said branch, for consideration, review and file. There will be submitted with the report a copy of the contract under which the advance payment was authorized or, if the advance payment was authorized under a supplemental agreement, a copy of the contract and of such supplemental agreement. The report

will contain a statement of the amount of the contract, the amount of the advance payment authorized, the national interest in making the advance payment, the proposed security and a statement as to whether prior approval of withdrawal is to be required as well as a statement of the financial responsibility of the contractor and of its ability to perform the contract. The contractor's most recent balance sheet or a Federal Reserve Bank report should also be filed.

(3) *Quarterly report.* In each year, there shall be rendered to the Advance Payment and Loan Branch, Headquarters, Services of Supply reports for the periods ending March 31, June 30, September 30, and December 31. Each such report will be rendered fifteen days after the close of the period. There will be set forth in such reports the status of all contracts on which advance payments have been authorized. The following data should be included in the report:

(i) Contract number; (ii) Name of contractor; (iii) Description of contract; (iv) Type of contract; (v) Amount of contract as it may be changed from time to time; (vi) Amount of advance payments authorized; (vii) Amount of advance payments made; (viii) Advance payments recovered; (ix) Advance payments outstanding; (x) Appropriation symbol; (xi) Project number.

A special statement should be included in the report as to any contract with respect to which the completion of the contract and liquidation of the advance payments appear to be doubtful together with a statement as to the steps being taken to protect the advance payments. A report should include data previously furnished and not merely cover the period from the last report. However the report need not include contracts upon which complete liquidation of the advance payments have been made and so reported in a previous report.

(4) *Interim reports.* If at any time between the rendering of quarterly reports it appears doubtful that a contractor to whom advance payments have been made will complete the contract, a report should be rendered to the Advance Payment and Loan Branch, Fiscal Division, Headquarters, Services of Supply, immediately. The reports should include a statement of the facts in the case and of the steps being taken to protect the advance payments.

Paragraph (b) of the Government-Owned Facilities Clause quoted in § 81.332 is amended to read as follows:

§ 81.332 *Government-Owned Facilities Clause.* * * *

(b) As each item of the facilities listed in Schedule "A" is delivered to, or manufactured by, the contractor, for the Government's account, it shall become and remain the property of the Government, and title thereto shall vest in the Government.[1] (All of the facilities listed in Schedule B are the property of the Government, and title to them is, and shall remain, in the Government.) The Government hereby grants to the contractor the right to use, without the payment of rental therefor, such facilities in connection with the work herein contracted for and, subject to the written approval of the contracting officer, for any additional work for which the Government may contract.

The contractor agrees at its own expense to keep the facilities in good operating condition and repair and to make repairs and replacements to the extent that the necessity for such repairs and replacements is due to wear and tear resulting from operational activities. The contractor shall not be liable for loss or destruction of or damage to the facilities unless such loss, damage or destruction results from failure to perform the duty imposed by the preceding sentence or from wilful misconduct or failure to exercise good faith on the part of the contractor's corporate officers or other representatives having supervision or direction of the operation of the whole of the contractor's business or of the whole of any plant operated by the contractor in the performance of this contract.

* * * * *

ITEMS SUBJECT TO FEDERAL EXCISE TAXES

§ 81.816 *Items subject to Federal excise taxes.* The items subject to manufacturers' excise taxes imposed by Chapter 29 of the Internal Revenue Code, as amended, are listed below. The tax imposed in each case is equivalent to the indicated percentum of the price for which sold by the manufacturer, producer or importer. The tax rates specified are those effective November 1, 1942. The Revenue Act further provides that, for the purposes of the tax, the lease of an article (including any renewal or extension of a lease or any substitute lease of such article) by the manufacturer, producer or importer shall be considered a taxable sale of such article. (Sec. 3440, as amended)

CHAPTER 29—MANUFACTURERS' EXCISE AND IMPORT TAXES

SUBCHAPTER A—MANUFACTURERS' EXCISE TAXES

	Sec. I. R. C.	*Sec. this Reg.*
Automobiles, trucks, buses and parts	3403	§81.810(b)
Business and store machines	3400(a)(6)	§81.810(a)( )(v)
Electrical energy	3411	§81.810(h)
Electric, gas, and oil appliances	3400(a)(3)	§81.810(a)(1)(iii)
Electric light bulbs and tubes	3400(a)(10)	§81.810(a)(1)(vi)
Firearms, shells, and cartridges	3407	§81.810(f)
[Pistols and revolvers—see ch. 25, §3700(a); §81.816 (f)]		
Gasoline	3412(a)	§81.810(i)
Lubricating oils	3413	§81.810(j)
Luggage	3400(a)(2)	§81.810(a)(1)(ii)
Matches	3400	§81.810(a)
Photographic apparatus	3400(a)(4)	§81.810(a)(1)(iv)
Radio receiving sets, phonographs, phonograph records, and musical instruments	3404	§81.810(c)
Refrigerators, refrigerating apparatus, air-conditioners	3405	§81.810(d)
Sporting goods	3400(a)(1)	§81.810(a)(1)(i)
Tires and inner tubes	3400(a)	§81.810(a)
Toilet preparations (terminated)	3401	----------

* * * * *

(c) *Radio receiving sets, phonographs, phonograph records, and musical instruments.* * * *

(4) *Musical instruments.* (Subsection (*d*) The tax under section 3404 (d)) of the Internal Revenue Code does not apply to the sale of an organ sold under a bona fide written contract entered into before October 1, 1941, and the tax paid with respect to the sale of an organ under such a contract may be refunded, subject to the provisions of section 3443 (d) of the Internal Revenue Code. (See § 81.813 (a) of this regulation.)

(d) *Refrigerators, refrigerating apparatus, and air-conditioners.* Including in each case parts or accessories therefor sold on or in connection with the sale thereof—10 per centum. (Section 3404)

(1) *Refrigerators.* Household type refrigerators (for single or multiple cabinet installations) having, or being primarily designed for use with, a mechanical refrigerating unit operated by electricity, gas, kerosene, or gasoline. (Subsection (*a*))

(2) *Refrigerating apparatus.* Cabinets, compressors, condensers, evaporators, expansion units, absorbers, and controls for, or suitable for use as parts of or with, household type refrigerators of the kind described in subsection (a) except when sold as component parts of complete refrigerators or refrigerating or cooling apparatus. (Subsection (*b*))

(3) *Air-conditioners.* Self-contained air-conditioning units. (Subsection (*c*))

(e) *Sporting goods; luggage; etc. (New Manufacturers' Excise Taxes).* (Section 3406) * * *

(iv) *Photographic apparatus.* (a) Cameras (except cameras weighing more than four pounds exclusive of lens and accessories) and lenses, photographic apparatus and equipment, and any apparatus or equipment designed especially for use in the taking of photographs or motion pictures or in developing, printing, or enlarging photographs or motion pictures—25 per centum;

(b) Unexposed photographic films (including motion picture films, but not including X-ray film), photographic plates and sensitized paper—15 per centum. (Paragraph (4))

Subdivisions (v), (vii), (viii) and (ix) of this subparagraph are rescinded and subdivisions (vi) and (x) are redesignated (v) and (vi) respectively, subdivision (v) being amended with respect to the item, cash registers, as follows:

(v) *Business and store machines—10 per centum.* (Paragraph (6)) * * *

Cash registers, except cash registers of the type used in registering over-the-counter retail sales.

* * * * *

(vi) *Electric light bulbs and tubes.* Electric light bulbs and tubes, not including articles taxable under any other provisions of this subchapter—5 per centum. (Paragraph (10))

* * * * *

(j) *Lubricating oils.* 6 cents a gallon. (Section 3413) The term "lubricating oil" as used in these regulations includes all oils, regardless of their origin, which are sold as lubricating oil and all oils which are suitable for use as a lubricant. The term "lubricating oils" does not include products of the new type commonly known as grease.

§ 81.817 *Federal retailers' excise taxes.* The items on which Federal re-

[1] Use these provisions only where the Government is furnishing facilities which it has acquired, or will acquire, directly.

tailers' excise taxes are imposed are listed below. The tax is in the amount of 10 per centum of the price for which sold, and the taxes are effective as of October 1, 1941.

CHAPTER 19—RETAILERS' EXCISE TAXES

SEC. 2400. *Jewelry, etc.* (1) All articles commonly or commercially known as jewelry, whether real or imitation; pearls, precious and semi-precious stones, and imitations thereof; articles made of, or ornamented, mounted or fitted with, precious metals or imitations thereof; watches and clocks and cases and movements therefor; gold, gold-plated, silver, silver-plated or sterling flatware or hollow ware; opera glasses; lorgnettes; marine glasses; field glasses; and binoculars.

(2) The tax imposed by this section (subparagraph (1) above) shall not apply to any article used for religious purposes, to surgical instruments, to watches designed especially for use by the blind, to frames or mountings for spectacles or eye-glasses, to a fountain pen or smokers' pipe if the only parts of the pen or the pipe which consist of precious metals are essential parts not used for ornamental purposes, or to buttons, insignia, cap devices, chin straps, and other devices prescribed for use in connection with the uniforms of the armed forces of the United States.

SEC. 2401. *Furs.* Articles made of fur on the hide or pelt, and articles of which such fur is the component material of chief value.

SEC. 2402. *Toilet Preparations.* Perfumes, essences, extracts, toilet waters, cosmetics, petroleum jellies, hair oils, pomades, hair dressings, hair restoratives, hair dyes, aromatic cachous toilet powders, and any similar substance, article, or preparation, by whatsoever name known or distinguished; any of the above which are used or applied or intended to be used or applied for toilet purposes.

§ 81.918 *General instructions.* * * *

(d) The minimum wage determinations made to date by the Secretary of Labor are published in the succeeding sections.

	Section
Aircraft manufacturing industry	81.937
Blueprint paper coating industry	81.944
Bobbinet industry	81.938
Chemical and related products industry	81.961
Cement industry	81.950
Cotton garments and allied industries	81.924
Barrack bags and bandoleers	81.924
Textile belts, leggings, covers, bags, etc	81.924
Dental goods and equipment manufacturing industry	81.954
Die casting manufacturing industry	81.953
Dimension granite industry	81.926
Drug and medicine industry	81.942
Envelope industry	81.929
Evaporated milk industry	81.957
Fertilizer industry	81.946
Fireworks industry	81.934
Commercial fireworks	81.934
Fuses, flares, etc	81.934
Flintglass industry	81.932
Fiberglass and fiberglass products	81.932
Furniture industry	81.941
Metal furniture	81.941
Public seating	81.941
Wood furniture	81.941
Handkerchief industry	81.928
Iron and steel industry	81.939
Knitted and men's woven underwear and commercial knitting industry	81.919
Leather, leather trimmed, and sheep-lined garments industry	81.931
Leather manufacturing industry	81.959
Luggage and saddlery industries	81.933
Carrier's tie straps and leather pouches	81.933
Men's hats and caps industry	81.922
Women's hats and caps	81.922
Men's neckwear industry	81.925
Men's raincoat industry	81.923
Oiled cotton waterproof outer garment	81.923
Paint and varnish industry	81.958
Paper and pulp industry	81.949
Photographic supplies industry	81.943
Scientific industrial and laboratory instrument industry	81.955
Seamless hosiery industry	81.921
Small arms ammunition, explosives, and related products industry	81.948
Small arms ammunition	81.948
Explosives	81.948
Blasting caps	81.948
Shoe manufacturing and allied industries	81.927
Soap industry	81.945
"Specialty accounting" supply manufacturing industry	81.947
Structural clay products industry	81.951
Surgical instruments and apparatus industry	81.956
Tag industry	81.936
Textile industry	81.960
Tobacco industry	81.940
Uniform and clothing industry	81.952
Suit and coats	81.952
Outdoor jackets	81.952
Wool trousers	81.952
Vitreous or vitrified china industry	81.930
Wool carpet and rug industry	81.935
Work gloves industry	81.920

NOTE: * * *

§ 81.937 *Aircraft manufacturing industry*—(a) *The following illustrative list* of commodities, their parts and accessories is understood to be within the scope of the aircraft manufacturing industry wage determination (included are not only those products which were originally construed to be within this industry, but also those products which have since been included by interpretation. This list is subject to revision as additional interpretation of products is made):

Airplanes.
Engines, aircraft-type.
Gliders.
Propellers, aircraft and parts and accessories, such as:
Airplane spare parts and accessories:
Accumulators, landing gear.
Adapter assembly for oxygen masks.
Adapters and plungers.
Ailerons.
Ammunition rounds counters and contractors.
Axles.
Beaching gear.
Bomb bay tanks.
Bomb hoists.
Bomb rack assemblies.
Bomb shackles.
Booster coils.
Brackets.
Brake hose and hose fittings.
Cabin center panel for windshield.
Cable terminals.
Cables, motor trigger.
Clevises.
Clips.
Conduit and pipe fittings.
Control assemblies for bomb release interval.
Control equipment for turrets.
Controls, air brake.
Couplings.
Cowlings.
Propellers, aircraft, etc.—Con.
Airplane spare parts and accessories—Con.
De-icer equipment (except rubber) for propeller windshield and carburetor venturi.
Domes, plexiglas navigating.
Elbows.
Elevators.
Fairings.
Ferrules.
Fins.
Fittings, structural.
Fixtures: master and articulated rod bearing and bushing.
Flaps, wing.
Flare racks.
Floats.
Generators.
Hinges.
Hoisting slings.
Hooks, arresting.
Hose assemblies.
Housings.
Hulls, seaplane.
Hydraulic pressure regulators.
Hydraulic windshield wipers.
Jumpers, bonding.
Landing gear:
Brakes.
Oleo struts.
Skids.
Tires.
Wheels.
Levers.
Locks, oleo leg.
Mount assemblies:
Gun, ammunition box.
Mounts:
Camera, engine, and generator.
Oleo packing.
Operating cylinders.
Panels, wing.
Pedals.
Pins, fitting.
Posts.
Pulleys.
Pump, oil supply tank, control and distributing valve.
Recoil dampeners, gun.
Reservoirs.
Retracting cylinders.
Rudders.
Seats, pilot.
Shackles.
Shock struts and cords.
Solenoids.
Spars.
Sponsons.
Stabilizers.
Struts, shock (oleo) and parts.
Supports.
Switches:
Electrical, gun control.
Swivels.
Tabs.
Tail skids.
Tail surfaces.
Tail wheel assemblies.
Tail wheel caster knuckles.
Tanks.
Thimbles.
Tie rods.
Tips, wing.
Tow target releases and drags.
Trigger motors.
Turnbuckles.
Turret ammunition boxes and mount assemblies.
Turrets.
Valves.
Vents.
Wings.
Engine parts and accessories:
Adapters.
Arms.
Baffles.
Bushings.
Cages.
Cams.

Propellers, aircraft, etc.—Con.
Engine parts and accessories—Con.
Carburetor manifold jackets.
Carburetors.
Closures.
Collector rings.
Control systems.
Counterweights.
Covers, metal.
Crankcases.
Crankshafts.
Cylinder barrels.
Cylinder heads.
Dowels.
Drives.
Filters:
Air, gasoline.
Fuel injection systems.
Gear boxes.
Glands.
Guides.
Heating systems.
Housings.
Ignition harness.
Impellers, super-charger.
Intercoolers.
Jets.
Magnetos.
Manifold:
Intake, exhaust.
Oil coolers.
Oil separators.
Pipes.
Pistons.
Plates.
Priming equipment.
Pumps:
Air, fuel, oil, vacuum.
Radiators.
Rockers.
Rods.
Seats, valve.
Shafts.
Slingers.
Spacers.
Spark plugs.
Starters.
Strainers.
Studs.
Sumps.
Superchargers.
Tappets.
Temperature regulating equipment.
Tubes.
Valves: engine, gasoline (pilot operated, manual control, syphon).
Propeller parts:
Barrels.
Blades.
Brackets.
Brakes.
Bushings.
Cams.
Collars.
Controls.
Counterweights.
Cylinders.
Domes.
Gears.
Governors.
Housings.
Hubs.
Pistons.
Spiders.
Spinners.
Specialized servicing equipment:
Airplane mooring kits.
Cable testing machines.
Check assemblies.
Clubs, test.
Cradle assemblies for servicing aircraft parts.
Combination work-stand-ladder assemblies.
Dollies.
Energizer assemblies.
Engine heaters.
External power units for hand inertia starters.
Pump testing units.

Propellers, aircraft, etc.—Con.
Specialized servicing equipment—Con.
Special testing equipment for aircraft engine, and propeller parts and accessories.
Special tools and stand assemblies for the assembly, disassembly, and repair of aircraft and the engines, propellers, parts, and accessories therefor.
Tables, propeller aligning.

(b) *Specifically excluded from the scope of the industry are:*

Fabricated textile products: Fabric covers (including engine-warming covers); parachutes; safety belts; tow targets; wind socks.

Pyrotechnics: Engine starter cartridges; flares; signals.

Electrical and radio equipment: Batteries; electric wire and cable; intercommunication equipment; landing and navigation lights; lighting systems; radios; radio compasses.

Rubber products: Rubber de-icing equipment; flotation gear; life preservers; life rafts; bonded rubber mountings; vibration dampers; rubber utilities; tires and tubes.

Machine shop products and machinery: Bearings; bolts, nuts, rivets, screws, and washers; gas refueling systems (including refueling pumps); gears and sprockets; piston rings; springs; wire rope.

Miscellaneous products: Cameras; fire extinguishers; first aid equipment; gaskets; instruments; lavatory equipment; lighter-than-air craft.

Date effective: May 7, 1942.

Wage: 50 cents an hour or $20.00 for a week of 40 hours, arrived at on time or piece-work basis.

Nothing in this determination shall be interpreted as abrogating any obligation that may have accrued under the terms of the determinations for the industry effective on December 29, 1938, and on November 18, 1941.

§ 81.943 *Photographic supplies industry (excluding motion picture equipment of 35mm. or over)*—(a) *The following illustrative list* of commodities is understood to be within the scope of the photographic supplies industry wage determination (included are not only those products which were originally construed to be within this industry, but also those products which have since been included by interpretation. This list is subject to revision as additional interpretation of products is made):

Accessories and parts, photographic: bellows, cable releases, cones, film rewinders, filters, lenses, magazines, reels, shades, shutters, splicers, spools, synchronizers.
Cameras.
Developing and printing equipment (except photographic chemicals): contact printers, driers, dry-mounting presses, enlargers, hangers, racks, stands, straighteners, tanks, washers, wringers.
Films, sensitized or unsensitized: photographic, X-ray.
Finders, photographic: view, range.
Flashlight apparatus, photographic (except lamps).
Frames, printing, photographic.
Holders, plate, photographic.
Machines: blueprint coating and reproduction, photocopying, photographic, photostat.
Projectors and their accessories and parts (except lamps).
Screens, photographic or X-ray: intensifying, projection.
Sensitized supplies, photographic: cloths, films, papers, plates, slides.
Tripods, photographic.
Vectograph.

(b) *Specifically excluded from the scope of this industry are:*

Blueprint, brownprint, black-line, and blackprint paper and cloth; photoengraving equipment; built-in photographic laboratory fixtures; camera mounts; drop-knife type print trimmers; cameras, projectors, and photographic accessories and parts of the 35 mm. size or larger (motion picture); photographic chemicals; and lamps.

Date effective: August 14, 1939.

Wage: 40 cents an hour or $16.00 per week of 40 hours, arrived at either upon a time or piece work basis: *Provided,* That learners may be employed at lower rates for a period of not to exceed 60 days if the total number of such workers in any one establishment does not exceed 5 per cent of the workers on the pay roll, and if such learners are paid not less than 80 per cent of the minimum wage as determined, or 32 cents an hour or $12.80 per week of 40 hours, arrived at either upon a time or piece work basis.

§ 81.944 *Blueprint paper coating industry.* * * *

Allowances or tolerances. None.

§ 81.948 *Small arms ammunition, explosives, and related products industry.* The following illustrative lists of commodities are understood to be within the scope of the small arms ammunition, explosives, and related products industry wage determination (included are not only those products which were originally construed to be within this industry, but also those products which have since been included by interpretation. This list is subject to revision as additional interpretation of products is made):

(a) *Small arms ammunition.*

Without reference to size:
Cartridges: blank.
Engine starter.
Howitzer igniting.
Mortar igniting.
Target rocket igniting.
Primers, saluting.
Shot shells (empty or loaded):
Riot gun.
Shotgun.
Not over .50 caliber:
Bullets.
Cartridges:
Machine gun.
Pistol.
Revolver.
Rifle.
Submachine gun.
Cases, cartridge, empty.
Cores, bullet.
and the primers, shot, and wads used in connection with any of the products included either of the above groups.

Date effective: September 16, 1940.

(b) *Explosives.*

Ammonium picrate.
Dinitroglycol.
Dynamite: ammonia, ammonia gelatine, blasting gelatine, gelatine, nitroglycerine, low freezing.
Fulminate of mercury.
Gelignite.
Gun cotton (dry nitrocellulose).
Lead azide.
Nitrocellulose: dry, flake.
Nitro-starch explosive, compressed.
Permissible explosives (Bureau of Mines Bulletin No. 219).
Picric acid.
Potassium nitrate.
Potassium picrate.

Powder: black, blasting, chlorate type fuse, nitroglycerine, pellet, smokeless cannon, smokeless gun.
Spotting charges: M1, M1A1.
Tetranitro—aniline.
Tetranitro—methane.
Tetryl.
Tolite.
Trinitro—aniline.
Trinitro—benzene.
Trinitro—cresol.
Trinitrotoluol or trinitrotoluene (TNT).
Trinitroxylene or trinitroxylol (TNX.)
Trinol.
Trotyl.

Date effective: September 16, 1940.

Wage: 57.5 cents an hour or $23.00 per week of 40 hours, arrived at either upon a time or piece rate basis. Apprentices may be employed at lower rates than herein determined, *Provided,* Their employment conforms to the standards of the Federal Committe on Apprenticeship.

(c) *Blasting caps.*

Blasting caps.
Detonating caps.

Date effective: September 16, 1940.

Wage: 47.5 cents per hour or $19.00 per week of 40 hours, arrived at either upon a time or piece rate basis. Apprentices may be employed at lower rates than herein determined, *Provided,* Their employment conforms to the standards of the Federal Committee on Apprenticeship.

Wage: 42.5 cents an hour or $17.00 per week of 40 hours, arrived at either upon a time or piece rate basis. Apprentices may be employed at lower rates than herein determined, *Provided,* Their employment conforms to the standards of the Federal Committee on Apprenticeship.

§ 81.955 *Scientific industrial and laboratory instruments industry.* The following illustrative list of commodities, their components and spare parts is understood to be within the scope of the scientific industrial and laboratory instruments wage determination (included are not only those products which were originally construed to be within this industry, but also those products which have since been included by interpretation. This list is subject to revision as additional interpretation of products is made):

Accelerometers.
Adrographs.
Alidades.
Almanac units, nautical.
Altimeters.
Altiperiscopes.
Ammeters.
Analyzers, exhaust gas.
Anemometers.
Apparatus, micro-projection.
Astrographs.
Automatic gun control equipment.
Azimuth drums.
Balances: analytical, laboratoy, precision, torsion.
Balancing machines.
Bank and climb control units.
Barographs.
Barometers.
Bars, beam-compass.
Bearing circles.
Binnacles, compensating.
Binoculars.
Boards: drafting, plotting.
Boro silicate (optical glass)
Brake testing machines, inertia.
Bulbs: resistance, thermometer.
Bunsen burners.
Centrifuge: human, small electric.
Chronograph, counter.
Clinometers, service.
Colimeters: binocular, octant.
Compasses: direction, drafting, hull vehicular, gyroscope.
Computers, gun data.
Controller assemblies.
Controls, domestic automatic (humidity, temperature).
Curves: aircraft, altitude correction, drafting.
Dials.
Directors, ballistic cam.
Dividers, proportional.
Drafting machines.
Dynamometers.
Equipment, automatic steering.
Fathometers.
Filters, ray.
Firing control equipment.
Flight control equipment, electronic.
Fuzes: glass tube, self-indicating.
Fuze setters.
Galvanometers.
Gages: depth, pressure, temperature, vacuum (but not machinists' precision)
Gears, steeling (gyroscope)
Generator, pulse.
Glass, optical.
Glasses, magnifying, reducing.
Gyro indicator assemblies.
Gyroscopes: directional, horizon.
Hydrographs, without clocks.
Hydrometers.
Hygrothermographs and accessories.
Inclinometers.
Indicators: directional, elevation, fuel mixture, salinity, temperature, velocity, level.
Instruments: drafting, engineering, laboratory, meteorological, military, navigation, ophthalmic, surveying, aircraft, recording.
Lenses (wholly or partially ground and polished) except photographic lenses and except lenses such as are of a noncorrective type used in protective goggles.
Lettering devices.
Level vials.
Liners (paper rulers).
Manometers: liquid, mechanical.
Map enlarging outfits.
Measures, map.
Meters: drift, electric, exposure, water velocity.
Microscopes.
Milliammeters.
Motion picture recording theodolites.
Mototracers.
Mounts: telescope, bombsight, periscope.
Octants.
Odometers.
Ophthalmic goods.
Ophthalmoscopes.
Pantographs, drafting.
Pelorus assemblies.
Pencils, drawing-instrument and parts.
Pens: barograph, drawing-instrument, thermograph.
Periscopes.
Pilots, robot.
Poles, tubular metal ranging.
Potentiometers.
Prickers, drawing-instrument.
Prisms.
Profilometers.
Projectors for air mapping.
Propeller shaft revolution indicating equipment.
Protractors.
Psychrometers, sling.
Pyrometers.
Q meters.
Recording instruments: depth, humidity, light intensity, stress, temperature, water stage.
Reels, sounding.
Reflector, sight.
Regulators, gaseous oxygen.
Resistance coils for use on scientific instruments.
Reticles.
Retinoscopes.
Rods: Philadelphia level, stadia.
Rotors, meteorological.
Rules: drafting, slide.
Sextants.
Sights: drift, telescopic, bomb, computing.
Signal assemblies (instruments).
Sound locators.
Sounding equipment, echo.
Splines and weights, sets.
Stabilizers, bomb.
Stadia, computer.
Stadimeters.
Stereophotogrammetric equipment.
Stereoscope, magnifying, lens prism.
Stereoscopic plotting instruments (aerial mapping projectors).
Strain measuring equipment.
Sunshine detectors (recorders).
Support: maximum and minimum thermometer, wind instrument.
Switches for engine cylinder thermometers.
Synchronous repeaters and transmitters.
Tachometers.
Tally counters.
Telescopes.
Temperature controls: electric, pneumatic.
T-squares.
Testing sets and equipment:
  Battery.
  Electric.
  Fatigue crack.
  Gage, portable.
  Hardness.
  Tension.
  Valve spring.
  Wheatstone bridge type.
Teststand assemblies:
  Tachometer.
  Automatic pilot.
Theodolites and tripods.
Thermocouples.
Thermographs.
Thermometers (except clinical).
Thermostats.
Torpedo computer trainer.
Tracers.
Trainers for pilot instruction.
Transits.
Transmission systems, gun data.
Triangles.
Tube assemblies, air-speed.
Tube, pitot-static.
Vanes, wind-instrument.
Vibration measuring instruments.
Whirling apparatus.

Date effective: September 23, 1941.

Wage: 40 cents an hour or $16.00 per week of 40 hours, arrived at either upon a time or piece work basis.

Apprentices may be employed at lower rates of pay if their employment conforms to the standards of the Federal Committee on Apprenticeship. Learners may be employed at the rate of 35 cents an hour or $14.00 per week of 40 hours for a period of not to exceed 60 days, if the total number of employees so classified does not exceed 10 per cent of the total number of employees in any one establishment in any given payroll or work week.

NOTE: The Department of Labor has issued the following interpretation of the term "optical glass" as used in the above-determination:

Optical glass is a generic term applying to that type of glass which after grinding and polishing assumes definite refractive qualities and is intended to include finished products as well as blanks.

By this token, ophthalmic glass and its products, including eyeglass lenses, as well as wholly or partially ground and polished

lenses for any purpose other than photographic, are covered by the determination.

§ 81.956 *Surgical instruments and apparatus industry.* The following illustrative list of commodities is understood to be within the scope of the surgical instrument and apparatus industry wage determination (included are not only those products which were originally construed to be within this industry, but also those products which have since been included by interpretation. This list is subject to revision as additional interpretation of products is made):

Adenotomes.
Anastomosis buttons.
Apparatus, blood transfusion.
Applicators, metal surgical.
Aspirators.
Atomizers.
Blades, surgeons'.
Bougies, metal.
Bronchscopes.
Catheters.
Cauteries.
Chisels, bone
Clamps, surgical.
Clips, suture.
Cranioclasts.
Curettes, surgical.
Cystoscopes.
Depressors, tongue (metal).
Dilators.
Directors, grooved.
Dissectors.
Drills, bone.
Drill points.
Elevators, bone, periosteal, rib.
Endoscopes.
Forceps, surgical.
Forks, tuning.
Gags, mouth.
Gouges.
Haemacytometers.
Hammers, surgical.
Hemostats.
Inhalers, anesthetic.
Instruments, foreign body.
Intubators.
Irrigators.
Knives, surgical.
Laryngoscopes.
Ligatures.
Lithotomes.
Mallet, surgical.
Microtomes.
Needles, surgical and hypodermic.
Otoscopes
Pelvimeters.
Perforators.
Periostectomes.
Pharyngoscopes.
Plates, bone.
Pliers, surgical.
Probangs.
Probes, surgical.
Proctoscopes.
Rachitomes.
Raspatories.
Rasps, surgeons'.
Razors, surgical.
Retractors.
Rongeurs.
Saws, surgical.
Scalpels.
Scissors or shears, surgical.
Sigmoidoscopes.
Snares.
Speculas.
Sphygmomanometers, mercurial and aneroid.
Spoons, surgical.
Sterilizers.
Stethoscopes.
Strippers, vein.
Syringes, glass or metal.
Sutures.
Tenacula.
Thermometers, clinical.
Trocars.
Trephine.
Trephine points.
Trachea tubes.
Urethroscopes.
Urethrotomes.
Wrenches, clubfoot.

§ 81.961 *Chemical and related products industry.* The following illustrative list of commodities is understood to be within the scope of the chemical and related products industry wage determination (included are not only those products which were originally construed to be within this industry, but also those products which have since been included by interpretation. This list is subject to revision as additional interpretation of products is made):

The chemical and related products industry includes:

A-1. Heavy, industrial, and fine chemicals, including compressed and liquefied gases, and insecticides and fungicides. (1939 Census of Manufactures industries Nos. 939, 985,[1] 933)

2. The by-products of the foregoing. (1939 Census of Manufactures industries Nos. 931, 982)

B. The manufacture of such commodities as bluing; bone black, carbon black, and lampblack; cleaning and polishing preparations, blackings, and dressings; mucilage, paste, and other adhesives. (1939 Census of Manufactures industries Nos. 995, 989, 989, 996)

(a) *Illustrative list of commodities:*

Acetylene gas.
Acid: boric, carbolic, oxalic.
Acid wash, deck covering alcohol, (except wood).
Amine, alkylated.
Ammonia, anhydrous.
Ammonia, household.
Ammonium nitrate.
Auramine.
Bichromate of soda.
Blackings.
Bleaching material.
Bluing.
Bone black.
Burnishing ink.
Cadmium lithopone lemon salt.
Calcium silicate.
Calomel.
Carbon black.
Carbon dioxide (dry ice).
Carbonate, strontium.
Casein.
Celluloid.
Cellulose, acetate flake.
Cement, mending (except rubber)
Chloroform.
Cleaners (no soap).
Compounds, industrial: boiler, water treating, insulating, metal treating.
Cresote.
Creosote oil.
Deodorants (except for human use).
Developer, x-ray film.
Dibutyl phthalate.
Dinitrotoluene.
Disinfectants: household, industrial.
Dressing, fabricated leather.
Dry cleaning preparations.
Dry mix for welding rod coating.
Dyestuffs.
Ethyl cellulose.
Ferro-alloys (except ferro-manganese) produced by electrochemical processes.
Ferrosilicon.
Fibestos, cellulose acetate.
Fluorescain dye.
Fungicides, agricultural
Gasket paste.
Germicides.
Gums, manufactured synthetic.
Hexamethylene tetramine.
Humidity indicators.
Hydrocarbon gases.
Hydrogenation catalyst.
Hydroquinone.
Hyperchloride.
Insecticides: agricultural, household.
Kolloxaline.
Lamp black.
Magnesium powder, black.
Magnesium metal powder.
Magnesium resinate.
Methox.
Methylbenzine.
Methybenzol.
Methyl chloride.
Mononitrotoluene.
Mucilage.
Neoprene.
Nitrocellulose, wet (gun cotton).
Oxygen.
Paint, desiccant detector.
Paris green.
Paste, adhesive.
Pentaerythrite.
Pentaerythritol.
Penthrite.
Pentolite.
Pentrinite.
Pentrite.
Phenol (carbolic acid).
Phenylemthone.
Photographic chemicals.
Polish: auto, metal, stove.
Polystyrene.
Potash.
Potassium perchlorate.
Pyrthrum concentrate extract.
Pyrethrum (insect powder).
Repellants: agricultural, household.
Resins, synthetic.
Rubber, synthetic.
Scouring powder (no soap).
Sealing wax.
Shoe impregnite.
Soda, caustic (sodium hydroxide).
Sodium hyposulfite.
Sodium nitrate, synthetic.
Sodium thiosulfate.
Stains, leather.
Strontium oxalate.
Synthetic gums.
Thermite, incendiary.
Thorium nitrate.
Tints, household.
Titanium tetrachloride.
Toluene.
Toluol.
Washing powder (no soap).
Wax: auto, metal, stove.

(b) *Specifically excluded from the chemical industry.*

Cement, rubber.
Compounds: caulking, damp proofing, water proofing; liquid and plastic roof coating.
Ferro-manganese.
Glue.
Paint remover.
Plastics, fabricated.
Polish: floor, furniture.
Rayon and allied products.
Salt: table, rock.
Soap.
Top dressings.
Varnish remover.
Wax: floor, furniture.

Date effective: April 28, 1942.

Wage: Arrived at either upon a time or piece work basis. (1) 40 cents an hour or $16.00 per week of 40 hours, for the States of Maryland, Virginia, North Carolina, South Carolina, Tennessee, Arkansas, Mississippi, Alabama, Georgia, Florida, and the District of Columbia; and

[1] Except water-proofing compounds.

(2) 50 cents an hour or $20.00 per week of 40 hours for the remaining States of the United States.

OVERTIME WAGE COMPENSATION

§ 81.964 *Current interpretations.* The Secretary of Labor has issued certain interpretations of Executive Order No. 9240, as amended. Extracts from the more important of the interpretations issued to date are set forth in the succeeding paragraphs. As additional interpretations are issued, the procurement regulations will be amended to reflect such interpretations.

* * * * *

(b) *The work to which Executive Order No. 9240, as amended, is applicable.* The order applies to all work performed by prime contractors on Government war contracts, by their subcontractors and by those who make the materials and supplies necessary for the performance of such contracts and subcontracts. The fact that an industry is seasonal does not remove it from the scope of the order. If the employer is engaged both in war work and in work unrelated to the prosecution of the war, the order will apply in the absence of segregation. The order should be construed liberally.

* * * * *

(e) *When double time is mandatory for seventh consecutive day work.* When work is actually performed on any seven consecutive days, double time must be paid for the work on the seven days even though the seven days on which work has been so performed fall in two work weeks unless by agreement the employer and employee have arranged a mutually satisfactory work schedule which affords a day of rest in each regular work week. A regular work week would be seven consecutive days starting on the same calendar day each week. If the seven consecutive days involved commenced in September, 1942, double time is not payable; such seven consecutive days must have been worked after October 1, 1942.

* * * * *

(k) *Same: when mandatory.* Time and one-half is required for work on the six holidays specified in paragraph I-B of the order. Under the order, it is permissible to pay employees straight time or less on such holidays even though the employee is given the day off.

WAGE AND SALARY STABILIZATION

Section 81.967 is redesignated § 81.975 and §§ 81.968 to 81.974 are rescinded and the following §§ 81.976, 81.977, and 81.980 are substituted therefor.

§ 81.975 *Executive Order No. 9250,* * * *

§ 81.976 *Regulations of Economic Stabilization Director approved by the President.* On October 27, 1942, Economic Stabilization Director Byrnes issued regulations (Part 4001) pursuant to authority vested in, and with the approval of, the President relative to wages and salaries. These regulations are set forth in paragraphs (a) to (p) of this section.

(a) *Definitions (Section 4001.1).* When used in these regulations, unless otherwise distinctly expressed or manifestly incompatible with the intent thereof—

(a) The term "Act" means the Act of October 2, 1942, entitled "AN ACT to amend the Emergency Price Control Act of 1942, to aid in preventing inflation, and for other purposes".

(b) The term "Board" means the National War Labor Board created by Executive Order no. 9017, dated January 12, 1942.

(c) The term "Commissioner" means the Commissioner of Internal Revenue.

(d) The term "Code" means the Internal Revenue Code, as amended and supplemented.

(e) The term "salary" or "salary payments" means all forms of direct or indirect compensation which is computed on a weekly, monthly, annual or other comparable basis, except a wage basis, for personal services of an employee irrespective of when rendered, including bonuses, additional compensation, gifts, loans, commissions, fees, and any other remuneration in any form or medium whatsoever (excluding insurance and pension benefits in a reasonable amount).

(f) The term "salary rate" means the rate or other basis at which the salary for any particular work or service is computed either under the terms of a contract or agreement or in conformity with an established custom or usage.

(g) The term "wages" or "wage payments" means all forms of direct or indirect compensation which is computed on an hourly or daily basis, a piece-work basis, or other comparable basis, for personal services of an employee irrespective of when rendered, including bonuses, additional compensation, gifts, commissions, loans, fees, and any other remuneration in any form or medium whatsoever (but excluding insurance and pension benefits in a reasonable amount).

(h) The term "insurance and pension benefits in a reasonable amount" means

(1) contributions by an employer to an employees' trust or under an annuity plan which meets the requirements of section 165 (a) of the Code, and

(2) amounts paid by an employer on account of premiums on insurance on the life of the employee which amounts are deductible by the employer under section 23 (a) of the Code, except that if such amounts are includible in the gross income of the employee under the Code, the amount in respect of each employee may not exceed five per cent of the employee's annual salary or wages determined without the inclusion of insurance and pension benefits.

(i) The terms "approval by the Board" and "determination by the Board" shall, except as may be otherwise provided in the regulations or orders of the Board, include an approval or determination by an agent of the Board duly authorized to perform such act; and such approval or determination, if subsequently modified or reversed by the Board, shall nevertheless for the purpose of these regulations, be deemed to have been continuously in effect from its original date until the first day of the payroll period immediately following the reversal or modification or until such later date as the Board may direct.

(j) The terms "approval by the Commissioner" and "determination by the Commissioner" shall, except as may be otherwise provided in regulations prescribed by the Commissioner, include an approval or determination by an agent of the Commissioner duly authorized to perform such act; and such approval or determination, if subsequently modified or reversed by the Commissioner, shall nevertheless for the purpose of these regulations, be deemed to have been continuously in effect from its original date until the first day of the payroll period immediately following reversal or modification or until such later date as the Commissioner may direct.

(b) *Authority of National War Labor Board (Section 4001.2).* The Board shall, subject to the provisions of sections 1, 2, 3, 4, 8, and 9 of Title II of Executive Order No. 9250, of October 3, 1942, have authority to determine whether any—

(a) Wage payments, or

(b) Salary payments to an employee totaling in amount not in excess of $5,000 per annum where such employee

(1) in his relations with his employer is represented by a duly recognized or certified labor organization, or

(2) is not employed in a bona fide executive, administrative or professional capacity are made in contravention of the Act, or any rulings, orders or regulations promulgated thereunder. Any such determination by the Board, made under rulings and orders issued by it, that a payment is in contravention of the Act, or any rulings, orders, or regulations promulgated thereunder, shall be conclusive upon all Executive Departments and agencies of the Government in determining the costs or expenses of any employer for the purpose of any law or regulation, either heretofore or hereafter enacted or promulgated, including the Emergency Price Control Act of 1942 or any maximum price regulation thereof, or for the purpose of calculating deductions under the revenue laws of the United States, or for the purpose of determining costs or expenses under any contract made by or on behalf of the United States. Any determination of the Board made pursuant to the authority conferred on it shall be final and shall not be subject to review by The Tax Court of the United States or by any court in any civil proceedings.

(c) *Rules, orders and regulations of Board (Section 4001.3).* The Board may make such rulings and issue such orders or regulations as it deems necessary to enforce and otherwise carry out the provisions of these regulations.

(d) *Authority of the Commissioner of Internal Revenue (Section 4001.4).* The Commissioner shall have authority to determine, under regulations to be prescribed by him with the approval of the Secretary of the Treasury, whether any salary payments other than those specified in paragraph (b) of section 4001.2 of these regulations are made in contravention of the Act, or any regulations or rulings promulgated thereunder. Any such determination by the Commissioner, made under such regulations, that a payment is in contravention of the Act, or any rulings or regulations promulgated thereunder, shall be conclusive upon all Executive Departments and agencies of the Government in determining the costs or expenses of any employer for the purpose of any law or regulations, either heretofore or hereafter enacted or promulgated, including the Emergency Price Control Act of 1942 or any maximum price regulation thereof, or for the purpose of calculating deductions under the revenue laws of the United States, or for the purpose of determining costs or expenses under any contract made by or on behalf of the United States. Any determination of the Commissioner made pursuant to the authority conferred on him shall be final and shall not be subject to review by the Tax Court of the United States or by any court in any civil proceedings. No increase in a salary rate approved by the Commissioner shall result in any substantial increase of the level of costs or shall furnish the basis either to increase price ceilings of the commodity or service involved or to resist otherwise justifiable reductions in such price ceilings.

(e) *Rules and regulations of Commissioner (Section 4001.5).* The Commissioner may prescribe such regulations with the approval of the Secretary of the Treasury, and make such rulings as he deems necessary, to enforce

and otherwise carry out the provisions of these regulations.

(f) *Salary increases (Section 4001.6).* In the case of a salary rate of $5,000 or less per annum existing on the date of the approval of these regulations by the President and in the case of a salary rate of more than $5,000 per annum existing on October 3, 1942, no increase shall be made by the employer except as provided in regulations, rulings, or orders promulgated under the authority of these regulations. Except as herein provided, any increase made after such respective dates shall be considered in contravention of the Act and the regulations, rulings, or orders promulgated thereunder from the date of the payment if such increase is made prior to the approval of the Board or the Commissioner, as the case may be.

In the case, however, of an increase made in accordance with the terms of a salary agreement or salary rate schedule and as a result of

(a) individual promotions or reclassifications,

(b) individual merit increases within established salary rate ranges,

(c) operation of an established plan of salary increases based on length of service,

(d) increased productivity under incentive plans,

(e) operation of a trainee system, or

(f) such other reasons or circumstances as may be prescribed in orders, rulings, or regulations, promulgated under the authority of these regulations, no prior approval of the Board or the Commissioner is required. No such increase shall result in any substantial increase of the level of costs or shall furnish the basis either to increase price ceilings of the commodity or service involved or to resist otherwise justifiable reductions in such price ceilings.

(g) *Decreases in salaries of less than $5,000 (Section 4001.7).* In the case of a salary rate existing as of the close of October 3, 1942, under which an employee is paid a salary of less than $5,000 per annum for any particular work, no decrease shall be made by the employer below the highest salary rate paid for such work between January 1, 1942, and September 15, 1942, unless to correct gross inequities or to aid in the effective prosecution of the war. Any decrease in such salary rate after October 3, 1942, shall be considered in contravention of the Act and the regulations, rulings, or orders promulgated thereunder if such decrease is made prior to the approval of the Board or the Commissioner, as the case may be.

(h) *Decreases in salaries of over $5,000 (Section 4001.8).* In the case of a salary rate existing as of the close of October 3, 1942, under which an employee is paid a salary of $5,000 or more per annum, no decrease in such rate made by the employer shall be considered in contravention of the Act and the regulations promulgated thereunder (see section 5 (b) of the Act): *Provided, however,* That if by virtue of such decrease the new salary paid to the employee is less than $5,000 per annum, then the validity of such decrease below $5,000 shall be determined under the provisions of section 4001.7 of these regulations.

(i) *Limitation on certain salaries (Section 4001.9).* (a) No amount of salary (exclusive of any amounts allowable under paragraphs (b) and (c) of this section) shall be paid or authorized to be paid to or accrued to the account of any employee or received by him during the taxable year which, after reduction by the Federal income taxes on the amount of such salary, would exceed $25,000. The amount of such Federal income taxes shall be determined (1) by applying to the total amount of salary (exclusive of any amounts allowable under paragraphs (b) and (c) of this section) paid or accrued during the taxable year, undiminished by any deductions, the rates of taxes imposed by Chapter I of the Code (not including section 409) as if such amount of salary were net income (after the allowance of credits applicable thereto), the surtax net income, and the Victory tax net income, respectively, and (2) without allowance of any credits against any of such taxes.

(b) In any case in which an employee establishes that his income from all sources is insufficient to meet payments customarily made to charitable, educational or other organizations described in section 23 (o) of the Code, without resulting in undue hardship, then an additional amount sufficient to meet such payments may be paid or authorized to be paid to or accrued to the account of any employee or received by him during the taxable year even though it exceeds the amount otherwise computed under paragraph (a).

(c) In any case in which an employee establishes that, after resorting to his income from all sources, he is unable, without disposing of assets at a substantial financial loss resulting in undue hardship, to meet payments for the following:

(1) Required payments (excluding accelerated payments) by the employee during the taxable year on any life insurance policies on his life which were in force on October 3, 1942,

(2) Required payments (excluding accelerated payments) made by the employee during the taxable year on any fixed obligations for which he was obligated on October 3, 1942,

(3) Federal income taxes of the employee for prior taxable years which are paid during the taxable year, not including Federal income taxes on the allowance under paragraph (a) for any prior year, an additional amount sufficient to meet such payments may be paid or authorized to be paid to or accrued to the account of any employee or received by him during the taxable year, even though it exceeds the amount otherwise computed under paragraph (a).

(d) In the case of an individual who is an employee of more than one person, the aggregate of the salaries received by such individual shall, under such circumstances as may be set forth in regulations promulgated under the authority of these regulations, be treated as if paid by a single employer.

(e) No amount of salary shall be paid or authorized to be paid to or accrued to the account of any employee or received by him after the date of approval of these regulations by the President and before January 1, 1943, if the total salary paid, authorized, accrued or received for the calendar year 1942 exceeds the amount of salary which would otherwise be allowable under paragraph (a) of this section and also exceeds the total salary paid, authorized, accrued or received for the calendar year 1941.

(f) Except as provided in paragraph (e) of this section, the provisions of this section shall be applicable to salary paid or accrued after December 31, 1942, regardless of when authorized and regardless of any contract or agreement made before or after such date.

(j) *Effect of unlawful payments (Section 4001.10).* (a) If any wage or salary payment is made in contravention of the Act or the regulations, rulings or orders promulgated thereunder, as determined by the Board or the Commissioner, as the case may be, the entire amount of such payment shall be disregarded by the Executive Departments and all other agencies of the Government in determining the costs or expenses of any employer for the purpose of any law or regulation, including the Emergency Price Control Act of 1942, or any maximum price regulation thereof, or for the purpose of calculating deductions under the revenue laws of the United States, or for the purpose of determining costs or expenses of any contract made by or on behalf of the United States. The term "law or regulations" as used herein includes any law or regulation hereafter enacted or promulgated. In the case of wages or salaries decreased in contravention of the Act or regulations, rulings or orders promulgated thereunder, the amount to be disregarded is the amount of the wage or salary paid or accrued. In the case of wages or salaries increased in contravention of the Act or regulations, rulings or orders promulgated thereunder, the amount to be disregarded is the amount of the wage or salary paid or accrued and not merely an amount representing an increase in such wage or salary. In the case of a salary in excess of the amount allowable under section 4001.9 of these regulations which is paid or accrued to an employee during his taxable year in contravention of the Act or regulations, rulings or orders promulgated thereunder, the amount to be disregarded is the full amount of such salary and not merely the amount representing the excess over the amount allowable under such section 4001.9.

(b) Payments made or received in violation of any regulations, rulings or orders promulgated under the authority of the Act are subject to the penal provisions of the Act.

(k) *Exempt employers (Section 4001.11).* The provisions of sections 4001.6, 4001.7 and 4001.8 of these regulations shall apply only in the case of an employer who employs more than eight individuals.

(l) *Salary allowances under Internal Revenue Code (Section 4001.12).* No provision of these regulations shall preclude the Commissioner from disallowing as a deduction in computing Federal income tax any compensation paid by an employer (regardless of the number of employees and of the amount paid to any employee) in excess of a "reasonable allowance" in accordance with the provisions of section 23 (a) of the Code.

(m) *Statutory salaries and wages (Section 4001.13).* These regulations shall be applicable to any salary or wages paid by the United States, any State, Territory or possession, or political subdivision thereof, the District of Columbia, or any agency or instrumentality of any one or more of the foregoing, except where the amount of such salary or wages is fixed by statute.

(n) *Territories and possessions (Section 4001.14).* The Board and the Commissioner shall have the authority to exempt from the operation of these regulations any wages or salaries paid in any Territory or possession of the United States where deemed necessary for the effective administration of the Act and these regulations.

(o) *Regulations of Economic Stabilization Director (Section 4001.15).* The Director shall have authority to issue such regulations as he deems necessary to amend or modify these regulations.

(p) *Effect of Executive Order No. 9250 (Section 4001.16).* To the extent that the provisions of Executive Order No. 9250, dated October 3, 1942, are inconsistent with these regulations, such provisions are hereby superseded.

§ 81.977 *Regulations of Commissioner of Internal Revenue.* From time to time the Commissioner of Internal Revenue issues regulations, with the approval of the Secretary of the Treasury, establishing procedures and rules for the administration and interpretations of such portions of Executive Order No. 9250 and of the regulations of the Economic Stabilization Director approved by the President on October 27, 1942 (§ 81.976 above) as are administered by the Commissioner of Internal Revenue. These regulations are set forth in paragraphs (a) to (c) of this section.

(a) *Salary Stabilization Unit (Section 1001.1.* There is established a Salary Stabilization Unit, which shall be under the supervision of a deputy commissioner of internal revenue, appointed in accordance with law, and which shall be independent of all other units of the Bureau of Internal Revenue.

(b) *Authority of Unit (Section 1001.2).* The Commissioner of Internal Revenue may confer upon the deputy commissioner in charge of the Salary Stabilization Unit such powers and duties as he shall deem necessary for the effective administration of the provisions of this Treasury decision.

(c) *Regional Offices (Section 1001.3).* The Commissioner of Internal Revenue may establish such regional offices as he shall deem necessary for the effective administration of the provisions of this Treasury Decision.

§ 81.980 *General Orders of National War Labor Board.* From time to time the National War Labor Board issues general orders establishing procedures and regulations for the administration and interpretations of such portions of Executive Order No. 9250 as are administered by the National War Labor Board, as well as interpretations of such general orders. The full text of such general orders and interpretations is set forth in paragraphs (a) to (i) of this section.

(a) *General Order No. 1.* All increases in wage rates which have been directed by the War Labor Board prior to October 3, 1942, shall be put into effect in accordance with the terms of the Directive Order in each particular case.

(b) *General Order No. 2.* The procedures in the National War Labor Board for the adjustment of labor disputes affecting wages established under Executive Order No. 9017, dated January 12, 1942, shall remain in full force and operation, and in all present or future cases in which the jurisdiction of the Board has attached or shall attach by certification or otherwise, the parties shall be deemed to have given notice within the terms of Title II, section 1, of Executive Order No. 9250, dated October 3, 1942.

(c) *General Order No. 3.* The National War Labor Board hereby approves all increases in wage rates which were put into effect on or before October 3, 1942: *Provided, however,* That the Board reserves the power under the provisions of Title III, section 3 of the Executive Order to disapprove any such wage rates which it may find to be inconsistent with the policy enunciated in the said Executive Order or hereafter formulated by the Economic Stabilization Director and in case of such disapproval to order the discontinuance of further payment of such wages.

(1) *Interpretation No. 1 of General Order No. 3.* In General Order No. 3 the words "increases in wage rates which were put into effect on or before October 3," include increases in wage rates which by written agreement entered into on or before October 3, 1942, or by formal action communicated to the employees on or before October 3, 1942, were made applicable to work done prior to October 3, 1942, notwithstanding such increases were first reflected in a payroll subsequent to October 3, 1942.

(2) *Interpretation No. 2 of General Order No. 3.* Any change in wage rates, regardless of its effective date, which results from the award or decision of an arbitrator or referee made after October 3, 1942, is subject to the provisions of Executive Order No. 9250, dated October 3, 1942, notwithstanding the agreement or order for arbitration or reference was made on or before October 3, 1942.

(3) *Interpretation No. 3 of General Order No. 3.* Unless otherwise expressly exempted, any change in wage rates provided for in any existing agreement to take effect at some future date or in the happening of some future event, is subject to the provisions of Executive Order No. 9250, dated October 3, 1942, regardless of when the agreement was made.

(d) *General Order No. 4.* Wage adjustments made by employers who employ not more than eight (8) individuals are exempted from the provisions of the Executive Order No. 9250 of October 3, 1942.

(1) *Interpretation No. 1 of General Order No. 4.* The exemption granted by General Order No. 4 to employers who employ not more than eight individuals does not apply to employers who own or operate more than one plant or unit where the aggregate of employees in such plants or units exceeds eight.

(2) *Interpretation No. 2 of General Order No. 4.* The exemption provided for by General Order No. 4 shall not apply to employers whose employees' wages, hours or working conditions have been established or negotiated on an industry, association, area or other similar basis, whether by master contract or by separate but similar or identical contracts.

(3) *General Order No. 4-A.* General Order No. 4 of the National War Labor Board dated October 9, 1942, exempting employers who employ not more than eight individuals from the provisions of said Executive Order, shall not apply to the employment of tool and die workers.

(e) *General Order No. 5.* (1) *Wage adjustments* may be made in the rates of individual employees, without approval of the National War Labor Board, if they are not incident to the application of the terms of an established wage agreement or to established wage rate schedules covering the work assignments of employees and are made as a result of:

a. Individual promotions or reclassifications.

b. Individual merit increases within established rate ranges.

c. Operation of an established plan of wage increases based upon length of service.

d. Increased productivity under piece-work or incentive plans.

e. Operation of an apprentice or trainee system.

The Board further finds that adjustments of wages made under this order should not result in any substantial increase of the level of costs and shall not furnish a basis either to increase price ceilings of the commodity or service involved or to resist otherwise justifiable reductions in such price ceilings.

(2) *Interpretation No. 1 of General Order No. 5.* The fixing of a piece-rate which was theretofore set only tentatively for trial purposes, and the re-setting of a piece-rate which was found to have been set in the first instance so as to yield less than the regularly established or normal amount prevailing in the plant for that type of job, are each "wage adjustments . . . Incident to the application of the terms of an established wage agreement or to established wage rate schedules" within the meaning of General Order No. 5, and may therefore be made without approval of the National War Labor Board.

(f) *General Order No. 6.* (a) The hiring of an individual at a wage rate in excess of the rate previously established in the plant for employees of similar skill and productive ability within the classification in which the individual is employed is a "wage increase" within the meaning of Executive Order No. 9250.

(b) If a wage rate for a job classification has not theretofore been established by the employer for the plant involved, the rate shall be fixed at a level not exceeding that which prevails for similar classifications within the area, unless a higher rate is approved by the National War Labor Board.

(g) *General Order No. 7.* Since Title VI, Section 1 of Executive Order No. 9250, dated October 3, 1942, states that "nothing in this Order shall be construed as affecting the present operation of the Fair Labor Standards Act," and since statutes and orders of the duly constituted authorities of the several states fixing minimum rates for certain types of workers carry out the true purposes and intent of the Fair Labor Standards Act, and are designated and intended to eliminate substandards of living within the meaning of section 2 of Title II of Executive Order No. 9250, the National War Labor Board hereby approves increases in wage and salary rates made in compliance with such statutes and orders.

(h) *General Order No. 8.* Exercising the authority vested in the National War Labor Board by § 4001.14 of Part 4001, Regulations Relating to Wages and Salaries issued on October 27, 1942 by the Economic Stabilization Director and approved by the President, and deeming it necessary for the effective administration of the Act of Congress of October 2, 1942, the Board hereby determines that adjustments in any wages or salaries over which this Board has jurisdiction and which are paid in any territory or possession of the United States, except Alaska, are exempted from the operation of the said Regulations and therefore may be made without the approval of the Board.

(i) *General Order No. 9.* Adjustments in Salaries Totaling not in excess of $5,000 per annum.

I. *Jurisdiction of the National War Labor Board.* Section 4001.2 of Part 4001 "Regulations Relating to Wages and Salaries," issued on October 27, 1942 by the Economic Stabilization Director and approved by the President provides in part that the National War Labor Board "shall have authority to determine whether any * * * salary payments to an employee totaling in amount not in excess of $5,000 per annum where such employee

(a) in his relations with his employer is represented by a duly recognized or certified labor organization, or

(b) is not employed in a bona fide executive, administrative or professional capacity, are made in contravention of the Act of Congress of October 2, 1942, or any ruling, orders or regulations promulgated thereunder."

In other words the Board has jurisdiction over the adjustment of salaries up to $5,000 a year, except for those employees employed in a bona fide executive, administrative or professional capacity who are not represented by duly recognized or certified unions.

Section 4010.7 of said Regulations provides that "In the case of a salary rate of $5,000 or less per annum existing on the date of the approval of these regulations by the President" (namely, October 27, 1942) no increase shall be made without the prior approval of the Board.

The Board hereby defines what is meant by "employed in a bona fide executive, administrative or professional capacity". (For the convenience of employers and employees who have been accustomed to the practices prevailing under the Fair Labor Standards Act, these definitions have been taken from the regulations promulgated by the Wage & Hour Administrator, pursuant to section 13 (a) (1) of the Fair Labor Standards Act of 1938 (52 Stat. 1060), but no provisions of that Act or of any regulations issued thereunder are in any way applicable to the regulations and orders of the National War Labor Board).

Executive. The term "employed in a bona fide executive capacity" shall mean any employee—

(A) whose primary duty consists of the management of the establishment in which he is employed or of a customarily recognized department or subdivision thereof, and

(B) who customarily and regularly directs the work of other employees therein, and

(C) who has the authority to hire or fire other employees or whose suggestions and recommendations as to the hiring or firing

and as to the advancement and promotion or any other change of status of other employees will be given particular weight, and

(D) who customarily and regularly exercises discretionary powers, and

(E) who is compensated for his services on a salary basis at not less than $30 per week (exclusive of board, lodging, or other facilities), and

(F) whose hours of work of the same nature as that performed by employees not employed in an executive, administrative or professional capacity do not exceed 20 percent of the number of hours worked in the workweek by the employees under his direction; provided that this subsection (F) shall not apply in the case of an employee who is in sole charge of an independent establishment or a physically separated branch establishment.

Administrative. The term "employed in a bona fide administrative capacity" shall mean any employee—

(A) who is compensated for his services on a salary or fee basis at a rate of not less than $200 pe month (exclusive of board, lodging, or other facilities), and

(B) (1) who regularly and directly assists an employee employed in a bona fide executive or administrative capacity (as such terms are defined in these regulations), where such assistance is nonmanual in nature and requires the exercise of discretion and independent judgment; or

(2) who performs under only general supervision, responsible nonmanual office or field work, directly related to management policies or general business operations, along specialized or technical lines requiring special training, experience, or knowledge, and which requires the exercise of discretion and independent judgment; or

(3) whose work involves the execution under only general supervision of special nonmanual assignments and tasks directly related to management policies or general business operations involving the exercise of discretion and independent judgment; or

(4) who is engaged in transporting goods or passengers for hire and who performs, under only general supervision, responsible outside work of a specialized or technical nature requiring special training, experience, or knowledge, and whose duties require the exercise of discretion and independent judgment.

Professional. The term "employed in a bona fide professional capacity" shall mean any employee who is—

(A) engaged in work—

(1) predominantly intellectual and varied in character as opposed to routine mental, manual, mechanical, or physical work, and

(2) requiring the consistent exercise of discretion and judgment in its performance, and

(3) of such a character that the output produced or the result accomplished cannot be standardized in relation to a given period of time, and

(4) whose hours of work of the same nature as that performed by employees not employed in an executive, administrative or professional capacity do not exceed 20 percent of the hours worked in the workweek by such employees: *Provided,* That where such nonprofessional work is an essential part of and necessarily incident to work of a professional nature, this subsection (4) shall not apply, and

(5) (a) requiring knowledge of an advanced type in a field of science or learning customarily acquired by a prolonged course of specialized intellectual instruction and study, as distinguished from a general academic education and from an apprenticeship, and from training in the performance of routine mental, manual, or physical processes; or

(b) predominantly original and creative in character in a recognized field of artistic endeavor as opposed to work which can be produced by a person endowed with general manual or intellectual ability and training, and the result of which depends primarily on the invention, imagination, or talent of the employee, and

(B) compensated for his services on a salary or fee basis at a rate of not less than $200 per month (exclusive of board, lodging, or other facilities): *Provided,* That this subsection (B) shall not apply in the case of an employee who is the holder of a valid license or certificate permitting the practice of law or medicine or any of their branches and who is actually engaged in the practice thereof.

II. *Effective Date of the Board's Jurisdiction.* Pursuant to section 4001.6 of the said Regulations, increases in salaries which by written agreement executed on or before October 27, 1942, or by formal action communicated to the employees, on or before October 27, 1942, were made applicable to work done prior to October 27, 1942, do not come within the jurisdiction of the Board, notwithstanding such increases are first reflected in a payroll subsequent to October 27, 1942.

III. *Salary Increases Which Do Not Require Board Approval.* Pursuant to section 4001.6 of the said Regulations, adjustments may be made in salary rates over which the Board has jurisdiction without the approval of the Board, if they are made in accordance with the terms of a salary agreement or salary rate schedule and as a result of

(a) individual promotions or reclassifications,

(b) individual merit increases within established salary rate ranges,

(c) operation of an established plan of salary increases based on length of service,

(d) increased productivity under incentive plans,

(e) operation of a trainee system, or

(f) such other reasons or circumstances as may be prescribed in orders, rulings, or regulations, promulgated under the authority of these regulations.

No such adjustments in salary rates, however, shall result in any substantial increase of the level of costs or shall furnish the basis either to increase price ceilings of the commodity or service involved or to resist otherwise justifiable reductions in such price ceilings.

IV. *Exempt Employers.* Pursuant to section 4001.11 of the said Regulations salary adjustments made by employers who employ not more than eight individuals are exempted from the provisions of sections 4001.6, 4001.7 and 4001.8 of the said Regulations and may therefore be made without the approval of the National War Labor Board.

V. *Statutory Salaries and Wages.* The said Regulations, pursuant to section 4001.13 thereof, are not applicable to any salary or wages paid by the United States, any state or political subdivision thereof, the District of Columbia, or any agency or instrumentality of any one or more of the foregoing where the amount of such salary or wages is fixed by statute. Adjustment in such salaries or wages may therefore be made without the approval of the National War Labor Board.

VI. *Decreases in Salaries of Less than $5,000 over which the National War Labor Board has jurisdiction as Defined in Section I of this Order.* Pursuant to section 4001.7 of the said Regulations, no decrease in a salary rate paid to an employee for any particular work, and over which the National War Labor Board has jurisdiction as defined in Section I of this Order, may be made by the employer below the highest salary rate paid for such work between January 1, 1941 and September 15, 1942, without the prior approval of the Board.

§ 81.1006 *Methods for providing new facilities.* * * *

(e) *Plan V: Government Ownership-Supply Contract*—(1) *Purpose.* For cases in which the contractor will acquire facilities (other than real estate and buildings) for the account of and to be paid for by the Government; facilities to be used by contractor to manufacture supplies under War Department Supply Contract; contractor to pay cost of repairs and replacements during life of contract to the extent that the necessity for such repairs and replacements is due to wear and tear resulting from operational activities. This type of Governmental financing is provided for by the article entitled "Government-Owned Facilities", § 81.332.

(2) *Financing.* Government funds.

(3) *Title.* Vested in the Government, with option in contractor, in certain cases, to buy at cost less depreciation.

§ 81.1013 *Approval of contracts required in special cases.* All emergency plant facilities contracts, all special facilities contracts and all contracts required to be submitted under § 81.1007, will be submitted to the Director, Purchases Division, Headquarters, Services of Supply, for approval.

§ 81.1103 *Purchase of used or second-hand materials*—(a) *General policy.* In view of the prevalent shortages of raw materials, manufacturing facilities, and labor, in the placing of contracts and purchase orders consideration will be given in every instance to whether second-hand or used articles or articles in dealers' stocks will serve the Government's purpose instead of new articles. In determining whether second-hand or used articles should be procured in any given instance, factors which should be given consideration include the following, among others:

(1) Whether used articles suitable for the particular purpose are available at reasonable cost and obtainable with reasonable effort.

(2) The length of time during which the articles in question are likely to be in use, the severity of the use to which they will be put, and the conditions under which they will be used.

(3) Whether used articles can meet the need for, which the articles are being procured.

(4) Whether applicable specifications are more rigid than necessary in the light of the particular purposes for which the articles are being obtained.

(5) Whether any valid reasons of health or safety require the use of new articles. [In cases of doubt as to this factor, the Office of the Surgeon General or other appropriate expert adviser should be consulted.]

(6) Whether there is a shortage of new articles of the type involved and the extent to which the manufacture of such articles involves the use of critical materials, manufacturing facilities of a type presently overburdened, or labor which can be utilized otherwise effectively in war work.

(b) *Enforcement of the policy.* The chiefs of each supply service will each at frequent intervals call the attention

of all procurement offices and agencies under his direction to the provisions of this and the preceding paragraph, will made adequate provision for the enforcement of the policy therein declared and will place responsibility upon a designated member of his staff for requiring compliance with that policy to the greatest extent practicable.

(c) *Removal of obstructions to procurement.* In any case where it is believed that any provision of law, statute, executive order, or Army or departmental regulations prevents the effective procurement of suitable used articles or other articles already available instead of new articles, this fact will be brought to the attention of the Director, Purchases Division, Headquarters, Services of Supply, through the chief of the supply service concerned, so that appropriate action may be taken pursuant to the First War Powers Act, 1941 and Executive Order 9001, or otherwise, to remove any obstruction to such procurement.

The paragraph relating to forms of contracts preceding § 81.1301 is amended as follows:

FORMS OF CONTRACTS

The contract forms contained in § 81.1301 et seq. [listed in the Table of Contents below] are approved for use for War Department purchases, subject to §§ 81.322–81.360, inclusive. It should be noted that many of the contract articles are set out by reference to said sections. In preparing contracts the standard clauses contained in the articles referred to will be set out only if, and to the extent that, their inclusion is required by the provisions of the sections referred to. There will be set out such of the other clauses contained in §§ 81.322 to 81.360, inclusive, not expressly referred to in the form, as are required for any particular contract. In certain cases it will be necessary to make certain editorial changes in the clauses contained in §§ 81.322 to 81.360 so that certain words or phrases used throughout the contract will be in conformity.

War Depart. Contract Form No.	*Description*	*Section*
1	Lump Sum Supply Contract	81.1301
2	Lump Sum Construction Contract	81.1302
3	Cost-Plus-A-Fixed-Fee Construction Contract	81.1303
4	Cost-Plus-A-Fixed-Fee Architect-Engineer Contract	81.1304
5	Short Form Supply Contract (Negotiated)	81.1305
6	Offer and Acceptance	81.1306
7	Letter Purchase Order	81.1307
8	Letter Contract (Supplies)	81.1308
9	Letter Contract (Fixed-Fee Construction)	81.1309
10	Letter Contract (Lump Sum Construction)	81.1310
11	War Risk Indemnity Contract	81.1311
*12	Fixed-Fee Architect-Engineer-Construction - Management Services Contract	81.1312
20	Supplemental Agreement for Advance Payments with Interest on Fixed-Price Contracts	81.1320
21	Supplemental Agreement for Advance Payments with Interest on Fixed-Fee Contracts	81.1321
22	Supplemental Agreement for Advance Payments with Interest on a Letter Purchase Order	81.1322
23	Supplemental Agreement for Advance Payments without Interest on Fixed-Price Contracts	81.1323
24	Supplemental Agreement for Advance Payments without Interest on Fixed-Fee Contracts	81.1324
25	Supplemental Agreement for Advance Payments without Interest on Letter Purchase Order	81.1325

*This form, which was previously designated W. D. Contract Form No. 4A has for convenience been renumbered 12.

[SEAL] J. A. ULIO,
Major General,
The Adjutant General.

[F. R. Doc. 42-12896; Filed, December 4, 1942; 12:06 p. m.]

TITLE 15—COMMERCE

Subtitle B—Regulations Relating to Commerce

Chapter III—Bureau of Foreign and Domestic Commerce

[Order No. 253]

PART 300—CHINA TRADE ACT REGULATION

ANNUAL REPORT

Section 300.14, *Annual report,* is amended by changing the period after "March 15" in the existing proviso to a semicolon and inserting immediately thereafter the following: *"Provided further,* That in all cases the time for filing said report for any year beginning after December 31, 1940, is extended until the fifteenth day of the sixth month following the month in which the present war with Germany, Italy, and Japan is terminated, as proclaimed by the President, or to such other extended date as the Registrar or the Secretary of Commerce shall set." (Secs. 12 (a), 17 (a), 42 Stat. 853, 854; 15 U.S.C. 152, 157.)

[SEAL] WAYNE C. TAYLOR,
Acting Secretary of Commerce.

DECEMBER 4, 1942

[F. R. Doc. 42-12903; Filed, December 4, 1942; 4:43 p. m.]

TITLE 21—FOOD AND DRUGS

Chapter I—Food and Drug Administration

[Docket No. FDC-36]

PART 51—CANNED VEGETABLES, DEFINITIONS AND STANDARDS OF IDENTITY; QUALITY AND FILL OF CONTAINER

CANNED PEAS; ORDER AMENDING DEFINITION AND STANDARD OF IDENTITY

Correction

The last paragraph of the document appearing on page 9918 of the issue for Tuesday, December 1, 1942, should read as follows:

The regulations hereby promulgated shall become effective on the ninetieth day following the date of publication of this order in the FEDERAL REGISTER.

TITLE 29—LABOR

Chapter VI—National War Labor Board

PART 803—GENERAL ORDERS

[General Order 17]

AUTHORIZATION TO THE OFFICE OF PRICE ADMINISTRATION TO ESTABLISH AREA PAY SCALES FOR LOCAL BOARD CLERKS

§ 803.17 *General Order No. 17.* (a) The National War Labor Board authorizes the Office of Price Administration in establishing area pay scales for its local board clerks to apply in each area the appropriate area pay scale set forth in the instructions contained in its Field Administrative Letter No. 7, Revised Supplement Number 1; provided, however, that before any such pay scale is made effective it must be certified by the Regional Director of the National War Labor Board that the pay scale appropriate to the area has been properly chosen in accordance with the provisions of said instructions.

(b) Upon approval by the Regional Director the new rates shall apply to all new appointments, promotions, demotions, transfers, and replacements, but they shall not be applied to reduce the rates of pay of present employees in their present positions.

(c) The Office of Price Administration shall file with the Board's appropriate Regional Office copies of any proposed changes in area pay scales, and shall supply any other information or reports the Board may require.

(d) The Regional Director is hereby authorized to approve such proposed changes in area pay scales, when so filed, unless he finds them inconsistent with Executive Order 9250 and the policies and orders of the National War Labor Board. His action on such proposed changes shall be subject to the review provided in the Board's "Procedure in Cases of Voluntary Applications for Wage Adjustments by Private Employers."

(E.O. 9250, 7 F.R. 7871)

ROBERT ABELOW,
Assistant Executive Secretary.

[F. R. Doc. 42-12893; Filed, December 4, 1942; 12:12 p. m.]

PART 803—GENERAL ORDERS

[General Order 18]

AUTHORIZATION TO THE NAVY DEPARTMENT TO PASS ON WAGE AND SALARY ADJUSTMENTS OF ITS CIVILIAN EMPLOYEES

§ 803.18 *General Order No. 18.* (a) The National War Labor Board hereby delegates to the Secretary of the Navy, to be exercised in his behalf by the Office of the Assistant Secretary of the Navy (hereinafter referred to as "The Navy Department Agency"), power to rule upon all applications for wage and salary adjustments (insofar as approval thereof has been made a function of the National

War Labor Board), covering civilian employees within the continental limits of the United States and Alaska, employed directly by the Navy Department (but excluding persons employed in government owned, privately operated facilities of the Navy Department); all in accordance with the further provisions of this order.

(b) In the performance of its duties hereunder the Navy Department Agency shall comply with the terms of Executive Order No. 9250, dated October 3, 1942, and all General Orders and policies of the National War Labor Board, heretofore or hereafter, announced thereunder. The Navy Department Agency, without making an initial ruling thereon, may refer to the Board for decision by the Board, any case which in the opinion of the Agency presents doubtful or disputed questions of sufficient seriousness and import to warrant direct action by the Board.

(c) The Navy Department Agency shall transmit to the Review and Analysis Division of the National War Labor Board copies of its rulings and rules of procedure, if any, and such additional data and reports as said Division or the Board may from time to time deem necessary.

(d) Any ruling by the Navy Department Agency or the Secretary of the Navy, hereunder shall be final, subject to the National War Labor Board's ultimate power to review rulings on its own initiative.

(e) Any ruling by the Navy Department Agency or the Secretary of the Navy hereunder shall be deemed to be the act of the National War Labor Board, unless and until reversed or modified by the Board. Any such order of reversal or modification shall allow a period of two weeks from the date of the Board's order within which to comply with the order.

(E.O. 9250, 7 F.R. 7871)

ROBERT ABELOW,
Assistant Executive Secretary.

[F. R. Doc. 42-12892; Filed, December 4, 1942; 12:12 p. m.]

TITLE 30—MINERAL RESOURCES

Chapter III—Bituminous Coal Division

[Docket No. A-1722]

PART 321—MINIMUM PRICE SCHEDULE, DISTRICT NO. 1

ORDER GRANTING RELIEF, ETC.

Order granting temporary relief and conditionally providing for final relief in the matter of the petition of District Board No. 1 for the establishment of price classifications and minimum prices for the coals of certain mines in District No. 1.

An original petition, pursuant to section 4 II (d) of the Bituminous Coal Act of 1937, having been duly filed with this Division by the above-named party, requesting the establishment, both temporary and permanent, of price classifications and minimum prices for the coals of certain mines in District No. 1 and for a change in shipping points for Mine Index Nos. 3268 and 653; and

It appearing that a reasonable showing of necessity has been made for the granting of temporary relief in the manner hereinafter set forth; and

No petitions of intervention having been filed with the Division in the above-entitled matter; and

The following action being deemed necessary in order to effectuate the purposes of the Act;

It is ordered, That, pending final disposition of the above-entitled matter, temporary relief is granted as follows: Commencing forthwith, § 321.7 (*Alphabetical list of code members*) is amended by adding thereto Supplement R-I and R-II, and § 321.24 (*General prices*) is amended by adding thereto Supplement T, which supplements are hereinafter set forth and hereby made a part hereof; and commencing forthwith, the shipping points appearing in the aforesaid Supplement R-II for the coals of Mine Index Nos. 3268 and 653 shall be as therein shown instead of the shipping points heretofore applicable to these mines.

It is further ordered, That pleadings in opposition to the original petition in the above-entitled matter and applications to stay, terminate or modify the temporary relief herein granted may be filed with the Division within forty-five (45) days from the date of this order, pursuant to the Rules and Regulations Governing Practice and Procedure before the Bituminous Coal Division in Proceedings Instituted Pursuant to section 4 II (d) of the Bituminous Coal Act of 1937.

It is further ordered, That the relief herein granted shall become final sixty (60) days from the date of this order, unless it shall otherwise be ordered.

Dated: November 25, 1942.

[SEAL] DAN H. WHEELER,
Director.

TEMPORARY AND CONDITIONALLY FINAL EFFECTIVE MINIMUM PRICES FOR DISTRICT NO. 1

NOTE: The material contained in these supplements is to be read in the light of the classifications, prices, instructions, exceptions and other provisions contained in Part 321, Minimum Price Schedule for District No. 1 and supplements thereto.

FOR ALL SHIPMENTS EXCEPT TRUCK

§ 321.7 *Alphabetical list of code members*—Supplement R-I

[Alphabetical listing of code members having railway loading facilities, showing price classifications by size group numbers]

Mine index No.	Code member	Mine name	Subdistrict No.	Seam	Shipping point	Railroad	Freight origin group No.	1	2	3	4	5
2823	Chest Creek Coal Company (Elizabeth Y. Redemsky).	Miller Run #3	17	B	Hastings, Pa.	PRR	50	(†)	(†)	(*)	C	C
3833	Creekside Coal Co. (Wm. Hawkins).	Creekside #2	13	E	McCartney, Pa.	PRR	45	(†)	(†)	F	(†)	(†)
1770	Miller, John D.	John D. Miller Coal Co.	32	E	Jerome, Pa.	B&O	100	G	(†)	(*)	G	(†)
3834	O'Donnell, W. F. & A. A. (W. F. O'Donnell).	Gaylord	3	Blue	Blossburg, Pa.	Erie	130	C	C	C	C	C
2970	O'Donnell, W. F. & A. A. (W. F. O'Donnell).	Seymour	3	Seymour	Blossburg, Pa.	Erie	130	(*)	H	(*)	(*)	(*)
3835	Walker, John D.	Leland #12	13	D	Madera, Pa.	PRR	45	(†)	(†)	D	D	D

†Indicates no classification effective for this size group.
*Indicates coal in this size group previously classified and priced.

§ 321.7 *Alphabetical list of code members*—Supplement R-II

[Alphabetical listing of code members having railway loading facilities, showing price classifications by size group numbers]

Mine index No.	Code member	Mine name	Subdistrict No.	Seam	Shipping point	Railroad	Freight origin group No.	1	2	3	4	5
3268	Beechnut Coal Co. (George A. Phillips).	Beechnut Coal Co.	33	B	Hillsboro, Pa.	PRR	45	(†)	(†)	A	(†)	(†)
653	Salisbury Construction Co. (T. J. Crambleit).	Big Vein #1	41	Pittsburgh	Salisbury Jct., Pa.	B&O	100	(†)	(†)	F	(†)	(†)

†Indicates no classification effective for this size group.

NOTE: The above prices are applicable only via the respective Freight Origin Group, Shipping Point, and Railroad shown for the respective mines. Freight Origin Groups, Shipping Points, and Railroads previously assigned to these mines are no longer applicable.

FOR TRUCK SHIPMENTS

§ 321.24 *General prices*—Supplement T

[Prices in cents per net ton for shipment into all market areas]

Code member index	Mine index No.	Mine	Subdistrict No.	County	Seam	All lump coal, double screened, top size 2" and over	Double screened, top size 2" and under	Run of mine, modified R/M	2" and under, slack	¾" and under, slack
						1	2	3	4	5
Bunco, Joe	3654	Bunco	2	Elk	Alton	(†)	(†)	240	(†)	(†)
Chest Creek Coal Company (Elizabeth Y. Radomsky).	2623	Miller Run #8	17	Cambria	B	(†)	(†)	(*)	245	23[illegible]
Clawson, Walter K	3749	Clawson	15	Indiana	E	(†)	(†)	245	(†)	(†)
Creekside Coal Co. (Wm. Hawkins).	3833	Creekside #2	13	Clearfield	E	(†)	(†)	240	(†)	(†)
D & C Coal Company (Albert Deacon).	3772	D & C	8	Clearfield	B	(†)	(†)	230	(†)	(†)
Fye, James A	3690	Fye	6	Jefferson	E	(†)	(†)	240	(†)	(†)
Haupt, G. Edward	3774	Haupt (S)	9	Centre	D	(†)	(†)	250	(†)	(†)
Miller, John D	1770	John D. Miller Coal Co.	32	Somerset	E	260	(†)	(*)	225	(†)
O'Donnell, W. F. & A. A. (W. F. O'Donnell).	3834	Gaylord	3	Tioga	Bloss	347	322	322	312	30
O'Donnell, W. F. & A. A. (W. F. O'Donnell).	2079	Seymour	3	Tioga	Seymour	(*)	297	(*)	(*)	(*)
Peterson, Albert	1894	Albert Peterson	6	Jefferson	D	270	245	(*)	235	22[illegible]
Robinson & Davis (William I. Robinson).	3742	Robinson & Davis	9	Centre	B	(†)	(†)	235	(†)	(†)
Rydesky & Stampee (John E. Rydesky).	3557	Rydesky	2	Cameron	Alton	265	(†)	240	230	(†)
Shaffer, Earl & Garwood (Earl Shaffer).	3770	Shaffer Mine	36	Somerset	E	(†)	(†)	245	(†)	(†)
Smith, Jack	3812	Blakely #1	22	Indiana	Pittsburgh	(†)	(†)	245	(†)	(†)
Smith, Jack	3813	Blakely #2	22	Indiana	Pittsburgh	(†)	(†)	245	(†)	(†)
Thomas, Dan & Glenn (Dan Thomas).	3769	Thomas	3	Lycoming	Bloss	(†)	(†)	255	(†)	(†)
Walker, John D	3835	Leland #12	13	Clearfield	D	(†)	(†)	250	240	230

†Indicates no classification effective for this size group.
*Indicates classifications and prices previously established for these size groups.

[F. R. Doc. 42-12887; Filed, December 4, 1942; 12:03 p. m.]

[Docket No. A-1700]

PART 322—MINIMUM PRICE SCHEDULE, DISTRICT NO. 2

ORDER GRANTING RELIEF, ETC.

Order granting temporary relief and conditionally providing for final relief in the matter of the petition of District Board No. 2, for changes in shipping points for certain mines in District No. 2.

An original petition, pursuant to section 4 II (d) of the Bituminous Coal Act of 1937, having been duly filed with this Division by the above-named party, requesting changes in shipping points, railroads and freight origin groups for certain mines in District No. 2; and

It appearing that a reasonable showing of necessity has been made for the granting of temporary relief in the manner hereinafter set forth; and

A petition of intervention filed with the Division in the above-entitled matter by District Board No. 3 having been withdrawn; and

The following action being deemed necessary in order to effectuate the purposes of the Act;

It is ordered, That, pending final disposition of the above-entitled matter, temporary relief is granted as follows: Commencing forthwith, § 322.7 (*Alphabetical list of code members* is amended by adding thereto Supplement R-I, and § 322.9 (*Special prices*—(c) *Railroad fuel*) is amended by adding thereto Supplement R-II, which supplements are hereinafter set forth and hereby made a part hereof and commencing forthwith the shipping points, railroads and freight origin groups shown therein shall be effective in place of those formerly established for these mines.

It is further ordered, That pleadings in opposition to the original petition in the above-entitled matter and applications to stay, terminate or modify the temporary relief herein granted may be filed with the Division within forty-five (45) days from the date of this order, pursuant to the Rules and Regulations Governing Practice and Procedure before the Bituminous Coal Division in Proceedings Instituted Pursuant to section 4 II (d) of the Bituminous Coal Act of 1937.

It is further ordered, That the relief herein granted shall become final sixty (60) days from the date of this order, unless it shall otherwise be ordered, except however, that the shipping point at Monaca, Pennsylvania, for Mine Index No. 785 shall be effective only for a period of 180 days from the date of this order.

Dated: November 25, 1942.

[SEAL] DAN H. WHEELER, *Director*.

TEMPORARY AND CONDITIONALLY FINAL EFFECTIVE MINIMUM PRICES FOR DISTRICT NO. 2

NOTE: The material contained in these supplements is to be read in the light of the classifications, prices, instructions, exceptions and other provisions contained in Part 322, Minimum Price Schedule for District No. 2 and supplements thereto.

FOR ALL SHIPMENTS EXCEPT TRUCK

§ 322.7 *Alphabetical list of code members*—Supplement R-I

[Alphabetical listing of code members having railway loading facilities, showing price classification by size group numbers]

Mine index No.	Code member	Mine name	Seam	Subdistrict No.	Shipping point	Railroad	Freight origin group No.	Size group numbers 1	2	3	4	5	6	7	8	9	10	11	12	13	14	15	16
344	Jefferson Coal & Coke Corp	Hanlin (Strip)	Pittsburgh	7	Hanlin Mine, Pa	PRR	75	L	L	J	J	J	J	K	K	K	(†)	(†)	(†)	(†)	(†)	(†)	(†)
785	Shane Brothers (Frederick H. Shane)	Shane Bros	U. Freeport	1	[1] Monaca, Pa.	P&LE	134	D	D	C	C	F	F	G	G	G	(†)	(†)	(†)	(†)	(†)	(†)	(†)
					Josephtown, Pa	P&LE																	
843	Tuck & Miller	Tuck & Miller	U. Freeport	1	Queens Junction, Pa	WA	21	F	F	E	E	E	E	F	F	F	(†)	(†)	(†)	(†)	(†)	(†)	(†)

†Indicates no classification effective for this size group.

NOTE.—The above prices are applicable only via the respective Freight Origin Groups, Shipping Points, Railroad and Railroad Fuel Groups shown for the respective mines. Freight Origin Groups, Shipping Points, Railroads and Railroad Fuel Groups shown in previous schedules are hereby deleted. Freight Origin Group No. 134 will take the same necessary and permissible adjustments as Freight Origin Group No. 73.

[1] Temporary loading point established at Monaca, Pennsylvania, for a period of 180 days from the date of this order.

§ 322.9 *Special prices*—(c) *Railroad fuel*—Supplement R-II. In § 322.9 (c) in Minimum Price Schedule, add the mine index numbers in groups shown. Group No. 2: 344, 785; Group No. 12: 943.

[F. R. Doc. 42-12889; Filed, December 4, 1942; 12:04 p. m.]

[Docket No. A-1728]

PART 322—MINIMUM PRICE SCHEDULE, DISTRICT NO. 2

ORDER GRANTING RELIEF, ETC.

Order granting temporary relief and conditionally providing for final relief in the matter of the petition of District Board No. 2 for the establishment of price classifications and minimum prices for the coals of certain mines in District No. 2.

An original petition, pursuant to section 4 II (d) of the Bituminous Coal Act of 1937, having been duly filed with this Division by the above-named party, requesting the establishment, both temporary and permanent, of price classifications and minimum prices for the coals of certain mines in District No. 2; and

A motion dated November 10, 1942, having been duly filed with this Division by said petitioner on November 12, 1942, requesting that its original petition heretofore filed herein be amended with respect to the relief for Nassar & Geary (Elias Nassar) who operate the Alexander Mine (Mine Index No: 2575), by proposing Price Classifications "F", "F", "E", "E", "E", "E", "E" "E" and "E", respectively, for Size Groups 1 to 9, inclusive, in lieu of Price Classifications "D", "H", "H", and "H", respectively, for Size Groups 6 to 9, inclusive; and

It appearing that a reasonable showing of necessity has been made for the granting of temporary relief in the manner hereinafter set forth; and

No petitions of intervention having been filed with the Division in the above-entitled matter; and

The following action being deemed necessary in order to effectuate the purposes of the Act;

It is ordered, That said motion be, and the same hereby is, granted and that the original petition heretofore filed herein be, and the same hereby is, amended in accordance with said motion; and

It is further ordered, That, pending final disposition of the above-entitled matter, temporary relief is granted as follows: Commencing forthwith, § 322.7 (*Alphabetical list of code members*) is amended by adding thereto Supplement R-I, § 322.9 (*Special prices*—(c) *Railroad fuel*) is amended by adding thereto Supplement R-II, and § 322.23 (*General prices*) is amended by adding thereto Supplement T, which supplements are hereinafter set forth and hereby made a part hereof.

It is further ordered, That pleadings in opposition to the original petition in the above-entitled matter and applications to stay, terminate or modify the temporary relief herein granted may be filed with the Division within forty-five (45) days from the date of this order, pursuant to the Rules and Regulations Governing Practice and Procedure before the Bituminous Coal Division in Proceedings Instituted Pursuant to section 4 II (d) of the Bituminous Coal Act of 1937.

It is further ordered, That the relief herein granted shall become final sixty (60) days from the date of this order, unless it shall otherwise be ordered.

Dated: November 27, 1942.

[SEAL] DAN H. WHEELER, *Director.*

TEMPORARY AND CONDITIONALLY FINAL EFFECTIVE MINIMUM PRICES FOR DISTRICT NO. 2

NOTE: The material contained in these supplements is to be read in the light of the classifications, prices, instructions, exceptions and other provisions contained in Part 322, Minimum Price Schedule for District No. 2 and supplements thereto.

FOR ALL SHIPMENTS EXCEPT TRUCK

§ 322.7 *Alphabetical list of code members*—Supplement R-I

[Alphabetical listing of code members having railway loading facilities, showing price classification by size group numbers]

Mine index No.	Code-member	Mine name	Seam	Sub-district No.	Shipping point	Railroad	Freight origin group No.	Size group Nos. 1	2	3	4	5	6	7	8	9	10	11	12	13	14	15	16
2331	Mapel-Sterling Coal Co. (O. A. Hout).	Mapel-Sterling (D)	Pittsburgh	3	Mapel-Sterling Works, Pa.	Mongh	20	F	F	E	E	E	E	E	E	E	(1)	(1)	(1)	(1)	(1)	(1)	(1)
2570	Mowry, A. R.	Mowry #1 (S)	Pittsburgh	7	Bruceton, Pa.	P & WV	75	C	C	C	C	F	F	F	F	F	(1)	(1)	(1)	(1)	(1)	(1)	(1)
2575	Nassar & Geary (Elias J. Nassar).	Alexander (D)	Pittsburgh	3	Mapel Siding, Poland, Pa.	Mongh	20	F	F	E	E	E	E	E	E	E	(1)	(1)	(1)	(1)	(1)	(1)	(1)

(1) Indicates no classification effective for this size group.

§ 322.9 *Special prices*—(c) *Railroad fuel*—Supplement R-II. In § 322.9 (c) in Minimum Price Schedule No. 1 add the mine index numbers in groups shown. Group 2: 2576; Group 7: 2575, 2581.

FOR TRUCK SHIPMENTS

§ 322.23 *General prices*—Supplement T

[Prices in cents per net ton for shipment into all market areas]

Code member index	Mine index No.	Mine	Seam	Base sizes										
				Lump, over 4"	Lump 4"	Lump 3"	Lump 2"	Egg 2" x 4"	Stove 1" x 4"	Pea ¾" x 1¼"	Run of mine	2" N/S	1¼" slack	¾" slack
				1	2	3	4	5	6	7	8	9	10	11
ALLEGHENY COUNTY														
Collins & Schweinberg & Company (Raymond Schweinberg).	2584	Sal Ray #3	Pittsburgh	330	320	310	285	255	255	245	265	225	215	205
Mowry, A. R.	2576	Mowry #1 (S)	Pittsburgh	315	305	295	270	245	245	240	240	215	205	200
ARMSTRONG COUNTY														
Serene & Harmon (H. G. Serene).	2579	Kaufman	Freeport	290	280	270	250	245	235	220	225	205	195	185
BEAVER COUNTY														
Devitt, Glenn	2578	Devitt	Pittsburgh	295	285	275	250	240	225	215	225	200	190	180
FAYETTE COUNTY														
Crystal Mining Company (Edw. S. Higbee).	478	Crystal (D)	Pittsburgh	310	300	290	270	250	240	235	240	225	220	195
Hague, Edward White	2582	Leisenring #1 S. D	Pittsburgh	330	320	310	290	270	260	255	260	230	220	205
Hague, Edward White	2583	Leisenring #2 S. D	Pittsburgh	330	320	310	290	270	260	255	260	230	220	205
West, W. L. & V. P. (W. L. West).	2574	West	Pittsburgh	295	285	275	260	240	230	230	230	215	210	195
GREENE COUNTY														
Jones, Earnest W	2577	Jones	Pittsburgh	295	285	275	265	250	240	235	240	210	200	185
Nassar's & Geary (Elias J. Nassar).	2575	Alexander (D)	Pittsburgh	295	285	275	265	250	240	235	240	210	200	185
WESTMORELAND COUNTY														
Keystone Gas Coal Co. (James D. Dull).	2580	Morewood	Redstone	295	285	275	255	245	240	235	235	215	205	195

[F. R. Doc. 42-12888; Filed, December 4, 1942; 12:03 p. m.]

TITLE 32—NATIONAL DEFENSE

Chapter IX—War Production Board

PART 971—ETHYL ALCOHOL AND RELATED COMPOUNDS

[General Preference Order M-30 as Amended Dec. 2, 1942 [1]]

Whereas the national defense requirements have created shortages of ethyl alcohol and related compounds for defense, for private account, and for export, and it is necessary, in the public interest and to promote the defense of the United States, to conserve the supply and direct the distribution thereof: *Now, therefore, it is hereby ordered,* That:

§ 971.1 *General Preference Order M-30*—(a) *Definitions.* (1) "Ethyl alcohol" means ethyl alcohol of 160 proof or more, denatured or undenatured, and from whatever source derived, but shall not include ethyl alcohol produced for beverage purposes.

(2) "Related compounds" means acetic acid, ethyl ether and ethyl acetate from whatever source derived.

(3) "Producer" means any person engaged in the production of ethyl alcohol or related compounds, and includes any person who has ethyl alcohol or any related compounds produced for him pursuant to toll agreement.

(4) "Distributor" means any person who has purchased or purchases ethyl alcohol or any related compounds for purposes of resale.

(5) "Calendar quarter" means the several three month periods of the year commencing January 1, April 1, July 1 and October 1.

(b) *Applicability of priorities regulations.* This order and all transactions affected thereby are subject to all applicable provisions of the priorities regulations of the War Production Board, as amended from time to time.

(c) *Restrictions on use and deliveries of ethyl alcohol.* Anything in Priorities Regulation 1 to the contrary notwithstanding, and except as hereafter may be otherwise directed by the Director General for Operations:

(1) No person shall, during any calendar quarter commencing January 1, 1942, accept delivery of ethyl alcohol for any purpose not specified in paragraphs (c) (2), (c) (3), (c) (4) and (k) hereof in excess of 100% of the quantity of ethyl alcohol which he used (distributed in the case of a distributor) for such purpose during the corresponding calendar quarter in the twelve months period ended June 30, 1941.

(2) No person shall during any calendar quarter commencing January 1, 1943, accept delivery of ethyl alcohol for a purpose set forth below in excess of 50% of the quantity of alcohol which was used (distributed in the case of a distributor) for such purpose during the corresponding calendar quarter in the 12-months period ended June 30, 1941; and no person shall during the month of December, 1942 accept delivery of ethyl alcohol for a purpose set forth below in excess of 50% of the quantity of ethyl alcohol which he used (distributed in the case of a distributor) for such purpose during December, 1940; provided further, however, that the quantity of ethyl alcohol used (or distributed) by such person for such purpose in the fourth quarter of 1942 shall not exceed 70% of the quantity used by him for such purpose in the corresponding quarter of 1940:

Sandy glazes.
Shoe polish.
Deodorants sprays (non-body).
All toiletries and cosmetics including but not limited to:
- Hair and scalp preparations.
- Bay rum.
- Shampoos.
- Face and hand creams and lotions.
- Body deodorants.
- Toilet waters.
- Perfume and perfume materials, tinctures and fixatives.
- Toilet soaps (including shaving cream).
- Mouth washes.
- Tooth cleaning preparations.
- Witch hazel.

For the purposes of this paragraph (c) (2) all toiletry and cosmetic uses of ethyl alcohol shall be considered as a whole, and the use during the base period of ethyl alcohol in a particular toiletry or cosmetic product may be used to support the future use of ethyl alcohol (in the indicated percentage) in a different toiletry or cosmetic product. For example, ethyl alcohol used in toilet waters during the base period would support the future manufacture of after shave lotions containing ethyl alcohol.

(3) No person shall, during any calendar quarter commencing July 1, 1942, accept delivery of ethyl alcohol for the manufacture of vinegar in excess of 110% of the quantity of ethyl alcohol which he used (distributed in the case of a distributor) for such purpose during the corresponding calendar quarter in the twelve months period ended June 30, 1941.

(4) Persons may, subject to Priorities Regulation 1, accept delivery of ethyl alcohol for the purposes set forth below without limitation:

Military explosives.
Acetic acid (except vinegar for food use).
Ethyl acetate.
Ethyl chloride.

[1] This document is a restatement of Amend. 3 to M-30 as Amended August 8, 1942, which appeared in the FEDERAL REGISTER of December 4, 1942, page 10099, and reflects the order in its completed form as of December 2, 1942.

Other ethyl esters.
Plastics and resins (manufacture of).
Acetaldehyde.
Ethyl ether.
Basic medicinal chemicals not in compounded form.
Glycol and other ethers.
Fulminate of mercury.
Ethylene dibromide.
Xanthates.
Flotation reagents.
Ethylene gas and ethylene oxide.
Dyes and intermediates (manufacture of).
Nitrocellulose (dehydration).
Nitrocellulose (dissolving and as diluent).
Diethylamine (for the manufacture of synthetic rubber).
Hydrosulfites.
Pectin.
Shellac, natural resins and gums (dissolving).

(5) No producer shall, during any calendar quarter commencing January 1, 1942, use ethyl alcohol in excess of the quantity of ethyl alcohol, delivery of which he may accept pursuant to paragraphs (c) (1), (2) and (3) above.

(6) No producer or distributor shall deliver any ethyl alcohol to any person during any calendar quarter unless, prior to such delivery, the deliveree shall have submitted to the deliveror a certificate, properly filled out and manually signed by a duly authorized official, in substantially the following form:

The delivery, during the calendar quarter of ____ gallons of alcohol, which the undersigned requires for a purpose set forth, either specifically or otherwise, in paragraph (c) ( ) of General Preference Order No. M-30, as amended, and in connection with which this certificate is submitted, will not be, taking into consideration ____ alcohol received and to be received during this calendar quarter from all sources, in excess of ____ percent of the quantity of ____ alcohol which the undersigned used for the same purpose during the corresponding calendar quarter in the twelve months' period ended June 30, 1941, and will not be in excess of the quantity of ____ alcohol to which the undersigned is entitled pursuant to said order, with the terms of which the undersigned is familiar.

Dated:

_____
(Name of deliveree)

By _____
(Duly authorized official)

If a delivery is for one of the purposes specified in paragraph (c) (4) hereof, it will be sufficient to certify to that fact alone. If a delivery is for use in cutting shellac, delivery shall not be made by a producer or distributor unless the certificate of the deliveree shall set forth (in addition to the foregoing): "The quantity of ethyl alcohol received and to be received during the month for which delivery is hereby ordered will not exceed the quantity thereof required to cut and thin the quantity of shellac allocated to the undersigned for such month under Conservation Order No. M-106.

(7) The restrictions and requirements hereinabove set forth with respect to the use and delivery of ethyl alcohol shall not apply to delivery to:

(i) The Army or Navy of the United States, the United States Maritime Commission, the War Shipping Administration, the Panama Canal, the Coast and Geodetic Survey, the Coast Guard, the Civil Aeoronautics Authority, the National Advisory Committee for Aeronautics, the Office of Scientific Research and Development.

(ii) The government of any of the following countries: Belgium, China, Czechoslovakia, Free France, Greece, Iceland, Netherlands, Norway, Poland, Russia, Turkey, United Kingdom, including its Dominions, Crown Colonies and Protectorates, and Yugoslavia.

(iii) The government of any country, including those in the Western Hemisphere, pursuant to the Act of March 11, 1941, entitled "An Act to Promote the Defense of the United States" (Lend-Lease Act).

(iv) Persons holding permits issued by the Bureau of Internal Revenue permitting them to acquire undenatured ethyl alcohol tax free.

Quantities permitted hereunder shall be in addition to quantities permitted under paragraph (c), (1), (2) and (3) hereof.

(d) *Small order exemption.* The restrictions and requirements set forth in paragraph (c) hereof shall not be applicable with respect to deliveries of quantities of ethyl alcohol of fifty-four gallons, or less, to any one person in any one month (less any quantities delivered to such person during such months from other sources).

(e) *Manufacture of anti-freeze.* The quantity of ethyl alcohol that may be used in the manufacture of anti-freeze shall be controlled by the provisions of General Limitation Order L-51, as amended from time to time.

(f) *Restrictions on production of ethyl alcohol.* Except as may be otherwise directed by the Director General for Operations, no producer shall, after January 15, 1942, produce ethyl alcohol from molasses (as defined in General Preference Order M-54, as amended) unless his equipment and facilities capable of producing ethyl alcohol from corn or grain are being utilized to the fullest extent possible in the production of ethyl alcohol from corn or grain.

(g) *Reports.* Reports shall be made at such times, on such forms and with respect to such matters as shall be prescribed by the Chemicals Division of the War Production Board.

(h) *Notification of customers.* Producers shall, as soon as practicable, notify each of their regular customers of the requirements of this order, but the failure to give such notice shall not excuse any person from the obligation of complying with the terms hereof.

(i) *Violations.* Any person who wilfully violates any provision of this order, or who, in connection with this order, wilfully conceals a material fact or furnishes false information to any department or agency of the United States is guilty of a crime, and upon conviction may be punished by fine or imprisonment. In addition, any such person may be prohibited from making or obtaining further deliveries of, or from processing or using, material under priority control and may be deprived of priorities assistance.

(j) *Appeals.* Any person affected by this order who considers that compliance therewith would work an exceptional and unreasonable hardship upon him, or that it would result in a degree of unemployment which would be unreasonably disproportionate compared with the amount of ethyl alcohol and related compounds conserved, or that compliance with this order would disrupt or impair a program of conversion from non-defense to defense work, may appeal to the War Production Board, Reference M-30, attention Chemicals Division, setting forth the pertinent facts and the reason he considers he is entitled to relief. The Director General for Operations may thereupon take such action as he deems appropriate.

(k) *Prohibited deliveries.* On and after November 11, 1942, no person shall deliver ethyl alcohol or any compound or preparation containing ethyl alcohol for use as rubbing alcohol or for the manufacture of any rubbing alcohol compound or preparation; provided that this restriction shall not prevent deliveries to:

(1) The agencies, governments or persons specified in paragraph (c) (7) hereof:

(2) Licensed physicians, dentists and veterinarians;

(3) The holders of written prescriptions or orders of licensed physicians, dentists and veterinarians;

(4) A wholesale or retail druggist, for resale in accordance with this paragraph (k) only.

(5) A manufacturer of any rubbing alcohol compound or preparation or a packager or bottler of any such compound or preparation, for resale in accordance with this paragraph (k) only.

(P.D. Reg. 1, as amended, 6 F.R. 6630; W.P.B. Reg. 1, 7 F.R. 561; E.O. 9024, 7 F.R. 329; E.O. 9040, 7 F.R. 527; E.O. 9125, 7 F.R. 2719; sec. (2a), Pub. Law 671, 76th Cong., as amended by Pub. Laws 89 and 507, 77th Cong.)

Issued this 2d day of December 1942.

ERNEST KANZLER,
Director General for Operations.

[F. R. Doc. 42-12314; Filed, December 5, 1942; 11:18 a. m.]

PART 989—DOMESTIC MECHANICAL REFRIGERATORS

[Supplementary Limitation Order L-5-d as Amended Dec. 5, 1942]

§ 989.5 *Supplementary General Limitation Order L-5-d*—(a) *Definitions.* For the purposes of this order:

(1) "Person" means any individual, partnership, association, business trust, corporation, governmental corporation or agency, or any organized group of persons whether incorporated or not.

(2) "Domestic mechanical refrigerator" means any refrigerator for household use which operates either by compression or absorption and which has a net capacity (N. E. M. A. rating) of 16 cubic feet or less. A low temperature mechanical refrigerator designed for the

storage of frozen foods or for the quick-freezing of food, where the low temperature compartment customarily operates at a temperature of not higher than 15 degrees above zero (Fahrenheit) and contains 75% or more of the total refrigerating space in the refrigerator, shall not be considered a domestic mechanical refrigerator.

(3) "New domestic mechanical refrigerator" means any domestic mechanical refrigerator which has never been used by an ultimate consumer, including any such refrigerator which has been used merely for demonstration purposes.

(4) "Manufacturer" means any person who manufactures or assembles new domestic mechanical refrigerators.

(5) "Dealer" means any person (other than a manufacturer or distributor) engaged in the business of making sales at retail of new domestic mechanical refrigerators to the public.

(6) "Distributor" means any person engaged in the business of selling new domestic mechanical refrigerators to dealers for resale.

(7) "Transfer" means to sell, lease, trade, deliver, ship or otherwise transfer a new domestic mechanical refrigerator. "Transfer" does not include a transfer of title merely for security purposes or to a person financing a conditional sale, or a similar transaction made simultaneously with the transfer of the refrigerator itself to the purchaser; nor does it include the sale, lease or delivery of any new domestic mechanical refrigerator as part of the sale, lease or delivery of the dwelling unit or other premises in which such refrigerator is installed for use.

(8) "Affiliated distributor" means any distributor which is owned or controlled by a manufacturer or under common ownership or control with a manufacturer. A person shall be deemed to be owned or controlled by another person when more than 50% of its voting capital stock is directly or indirectly owned by such other person.

(9) "Independent distributor" means any distributor other than an affiliated distributor.

(b) *Restrictions on transfers of new domestic mechanical refrigerators.* No person shall transfer or accept transfer of any new domestic mechanical refrigerator except as permitted under the provisions of this paragraph (b). Whenever any manufacturer or distributor is authorized to transfer new domestic mechanical refrigerators under subparagraph (3) of this paragraph (b) or under paragraph (c) (2) (iii), such transfers shall be made as far as is practicable through his normal distributive outlets on a basis proportionate to his distribution of new domestic mechanical refrigerators to them, respectively, during the year 1941, regardless of any previous commitments or contracts.

(1) Any new domestic mechanical refrigerator may be transferred pursuant to a certificate of transfer under the provisions of paragraph (c) or pursuant to other specific authorization of the Director General for Operations.

(2) Any new domestic mechanical refrigerator may be transferred in fulfillment of any contract or purchase order for delivery of any such refrigerator to or for the account of the Army or Navy of the United States, the United States Maritime Commission, the War Shipping Administration or the Panama Canal.

(3) Any new electric or gas (but not kerosene) domestic mechanical refrigerator, which, at 10 A. M. Eastern War Time, February 14, 1942, was in the inventory of a dealer, independent distributor or any other person not a manufacturer or affiliated distributor, may be transferred by any person to any other person without limit as to the number of transfers which may be made of any such refrigerator, provided that any transfer of a new domestic mechanical refrigerator to an ultimate consumer under the provisions of this subparagraph (3) may be made only if such transferee certifies in writing (which shall constitute a representation to the transferor and to the War Production Board) substantially as follows:

The domestic mechanical refrigerator being transferred is for my personal use (or for the use of my family, or my tenants). I have no other domestic mechanical or ice refrigerator at my disposal (or, I have disposed of any domestic mechanical or ice refrigerator which has been at my disposal since February 14, 1942 to a dealer or consumer).

Any new electric or gas domestic mechanical refrigerator which at 10 A. M. Eastern War Time, February 14, 1942 had been bought and fully paid for and was in the hands of the seller at that time, shall be deemed to have been in the inventory of the purchaser at 10 A. M. Eastern War Time, February 14, 1942.

(4) Any new kerosene domestic mechanical refrigerator which at 10 A. M. Eastern War Time, February 14, 1942, had been bought and fully paid for by an ultimate consumer, and was in the hands of the seller at that time may be delivered to the purchaser.

(5) Any person may distrain or levy by execution, attachment or similar form of judicial process, on any new domestic mechanical refrigerators, or repossess them on default, but may not transfer them thereafter except pursuant to the provisions of subparagraphs (1) and (2) of this paragraph (b) unless the refrigerators come within the provisions of subparagraph (3) of this paragraph (b).

(6) Any manufacturer may sell any new domestic mechanical refrigerator to Defense Supplies Corporation and Defense Supplies Corporation may resell any such refrigerators to the manufacturer from whom they were purchased.

(c) *Transfer of new domestic mechanical refrigerators by a certificate of transfer.* The Director General for operations may in his discretion issue a certificate of transfer in either of the following forms:

(1) A certificate of transfer on Form PD-428 may be issued pursuant to a written application filed on Form PD-427 in accordance with the instructions contained thereon by a person desiring to purchase one or more new domestic mechanical refrigerators. Each such certificate of transfer, when signed by the Director General for Operations, authorizes the transfer to the person named of the refrigerators mentioned therein, in accordance with the terms stated. If the certificate is presented to a dealer or distributor who is unable to fill the order from his stock of refrigerators, such dealer or distributor may obtain the refrigerators necessary to fill the order by placing a written purchase order for such refrigerators with a manufacturer, distributor or other person endorsing thereon a statement in the following form:

I (We) have received Certificate of Transfer, No. —, signed by the Director General for Operations, covering these refrigerators, and do not have them in stock.

Name of Company
By----------

Title

Any person with whom a purchase order bearing such an endorsement is placed may, if he does not have enough refrigerators in stock to fill the order, extend it by placing his own purchase order with a Manufacturer or other person holding such refrigerators and endorsing thereon a statement in the following form:

I (We) do not have these refrigerators in stock and they are required to fill an order placed with me by ----------, who certifies that he has received Certificate of Transfer, No. —, covering these refrigerators.

Name of Company
By----------

Title

Any person with whom a purchase order for new domestic mechanical refrigerators is placed having an endorsement in either of the above forms, unless he knows or has reason to believe it to be false, shall be entitled to rely on such endorsement and may transfer the refrigerators specified in such order in accordance with its terms.

(2) A certificate of transfer on Form PD-430 may be issued in order to permit the transfer of new domestic mechanical refrigerators:

(i) From one warehouse or place of storage to another warehouse or other place of storage, whether or not it involves any change in the ownership or title of such refrigerators;

(ii) From any person to any other person when the transfer does not come within the provisions of subparagraph (1) of this paragraph (c); or

(iii) From any manufacturer or affiliated distributor to any person, without limit as to the number of transfers which may be made of any such refrigerators, provided that (*a*) the words "unlimited transfer" appear on such certificate; and (*b*) any transfer to an ultimate consumer made under the provisions of this subdivision (iii) of this paragraph (c) (2) may be made only if such transferee certifies in writing in the form mentioned in paragraph (b) (3) of this order.

Whenever such certificates for "unlimited transfer" are issued by the Director General for Operations he shall take into consideration the number,

price range, size and type of new domestic mechanical refrigerators in the stocks of manufacturers and affiliated distributors on February 14, 1942 and thereafter.

(d) *Instructions and forms.* The Director General for Operations may issue from time to time such instructions and forms as may be required to carry out the provisions of this order.

(e) *Records.* All persons affected by this order shall keep and preserve, for not less than two years, accurate and complete records concerning inventories, production and sales.

(f) *Audit and inspection.* All records required to be kept by this order shall, upon request, be submitted to audit and inspection by duly authorized representatives of the War Production Board.

(g) *Reports.* (1) Each manufacturer shall file with the War Production Board, on or before the next business day after any shipment to or from his stock of refrigerators a report of all such shipments on Form PD-431.

(2) Each person (other than a manufacturer) holding any new domestic mechanical refrigerator which he cannot transfer under the terms of paragraphs (b) (3) or (c) (2) (iii) shall file with the War Production Board, on or before the next business day after any shipment to or from his stock of refrigerators a report of all such shipments on Form PD-431.

(3) All persons affected by this order shall file with the War Production Board such other reports and questionnaires as the Director General for Operations shall, from time to time prescribe.

(h) *Communications.* All reports to be filed and other communications concerning this order should be addressed to the War Production Board, Washington, D. C. Ref.: L-5-d.

(i) *Violations.* Any person who wilfully violates any provision of this order, or who, in connection with this order, wilfully conceals a material fact or furnishes false information to any department or agency of the United States, is guilty of a crime, and upon conviction may be punished by fine or imprisonment. In addition, any such person may be prohibited from making or obtaining further deliveries of or from processing or using materials under priority control and may be deprived of priorities assistance.

(j) *Order L-5-b superseded.* On and after June 15, 1942 the provisions of this order shall supersede all the provisions of Supplementary Limitation Order L-5-b.

(P.D. Reg. 1, as amended, 6 F.R. 6680; W.P.B. Reg. 1, 7 F.R. 561; E.O. 9024, 7 F.R. 329; E.O. 9040, 7 F.R. 527; E.O. 9125, 7 F.R. 2719; sec. 2 (a), Pub. Law 671, 76th Cong., as amended by Pub. Laws 89 and 507, 77th Cong.)

Issued this 5th day of December, 1942.

ERNEST KANZLER,
Director General for Operations.

INTERPRETATION 1

Supplementary General Limitation Order L-5-d, restricting the transfer of new domestic mechanical refrigerators, exempts from some of its restrictions a refrigerator which was in the hands of the seller at 10 a. m. Eastern War Time, February 14, 1942, and which "had been bought and fully paid for" prior to that time. The test to be employed in determining whether or not a refrigerator "had been bought and fully paid for" is whether the seller had received full payment at the specified time. If the full price of the refrigerator had been paid to the seller in cash, or by any other means, the refrigerator should be considered as "bought and fully paid for" regardless of the source of payment. It is not necessary that the full price be paid by the purchaser provided the seller had been fully paid. Thus if the purchaser had made a down payment of part of the purchase price and a finance company or bank had paid or credited the account of the seller with the balance of the price pursuant to a financing agreement with the purchaser, the refrigerators should be considered to have been "bought and fully paid for." In addition, in the absence of exceptional circumstances the receipt by the seller of a check prior to 10 a. m., Eastern War Time, February 14, 1942, for the full purchase price should be considered as payment in full before that time even though the check had not been cashed, deposited or otherwise collected. (Issued June 29, 1942.)

[F. R. Doc. 42-12307; Filed, December 5, 1942; 11:17 a. m.]

PART 1075—CONSTRUCTION

[Conservation Order L-41 as Amended Dec. 5, 1942]

War requirements of the United States have created a shortage of all materials required for war production and construction necessary thereto, for private account and for export; the War Production Board accordingly has stated as its policy that it is in the national interest that all construction which is not essential, directly or indirectly, to the successful prosecution of the war, and which involves the utilization of labor, material or construction plant urgently needed in the war effort, be deferred for the duration of the emergency; the following order is, therefore, necessary and appropriate in the public interest to conserve scarce materials by allocating them to essential uses and restricting their use in non-essential construction:

§ 1075.1 *Conservation Order L-41*—(a) *Definitions.* For the purpose of this order:

(1) "Person" means any individual, partnership, association, business trust, corporation, governmental corporation or agency, or any organized group of persons, whether incorporated or not.

(2) "Construction" means the erection, construction, remodeling or rehabilitation of any building, structure or project, or additions thereto or extensions or alterations thereof, but not including maintenance or repair as defined in paragraphs (a) (10) and (11) below.

(3) "Residential construction" means any construction where the principal designed function of the building, structure or project is or will be to provide living space or accommodations.

(4) "Multiple residential construction" means any residential construction where the principal designed function of the building, structure or project is or will be to provide living space or accommodations for more than five families, or which is divided or to be divided into more than five suites.

(5) "Agricultural construction" means any construction, other than residential construction, where the principal designed function of the building, structure or project is or will be the production of agricultural products including, but not limited to, those produced by farmers, planters, ranchmen, dairymen, poultrymen, or nut or fruit growers.

(6) "Industrial construction" means any construction where the principal designed function of the building, structure or project is or will be the manufacture, processing or assembling of goods or materials.

(7) "Other restricted construction" means any construction, other than residential, multiple residential, agricultural, or industrial construction, including, but not limited to, commercial, highway, roadway, sub-surface, and utilities construction, whether publicly or privately financed.

(8) "Begin construction" means to initiate construction by physically incorporating into any construction material which is an integral part of the construction.

(9) "Cost" is meant to include the total cost of labor and material, including equipment, architects', engineers' and contractors' fees, insurance charges and financing costs.

(10) "Maintenance" means the upkeep of a building, structure or project in sound working condition.

(11) "Repair" means the restoration without change of design, of any portion of a building, structure or project to sound working condition, when such portion has been rendered unsafe or unfit for service by wear and tear or other similar causes, but not including the reconstruction or restoration of construction damaged or destroyed by fire, flood, tornado, earthquake, act of God or the public enemy.

(b) *Prohibited construction.* No person shall begin construction or order, purchase, accept delivery of, withdraw from inventory or in any other manner secure or use material or construction plant in order to begin construction, unless the construction is within one of the following classes:

(1) The construction is to be the property of the Army or Navy of the United States, the United States Maritime Commission, Panama Canal, the Coast and Geodetic Survey, the Coast Guard, the Civil Aeronautics Authority, or the Office of Scientific Research and Development.

(2) The construction consists of any building, structure or project which is used directly in the discovery, development or depletion of mineral deposits.

(3) The construction is of a type subject to the provisions of any order in the M-68 series (Part 1047) relating to the production and distribution of petroleum. Any such construction is permitted only to the extent authorized by the applicable order in the M-68 series.

(4) The construction is of telephone facilities or equipment (including facilities or equipment for such telegraph or teletypewriter service as may be con-

ducted by a telephone operator), other than buildings and is authorized or permitted under the terms of Conservation Order L-50 (§ 1095.1); or the construction is of railroad tracks, together with the necessary appurtenances thereto; but not including buildings, tunnels, overpasses, underpasses or bridges.

(5) The construction is of facilities, other than buildings, to be owned by a producer as defined in Preference Rating Order P-46 (§ 978.1) pertaining to utilities and is to be used directly in providing one or more of the services set forth in paragraph (a) (1) of said order.

(6) Agricultural construction of irrigation pipe lines or tile drains in which no materials except earth or other unprocessed material and clay or nonreinforced concrete tile or pipe, not more than 12 inches in internal diameter, are incorporated; or agricultural construction incident to the erection or installation of farm machinery or equipment, listed in Schedule A of Limitation Order L-170 (§ 1029.10) and manufactured by producers as defined therein.

(7) The construction can be completed with materials which are either on hand or can be obtained without making application for priorities assistance and upon completion will not require the incorporation of any materials, on site or off site, to supply electric, gas, water, steam, telephone or sewage disposal service, and

(i) The construction is residential (but not multiple residential) or is specifically listed on Schedule B, attached hereto, and the estimated cost is less than $200, or

(ii) The construction is multiple residential, agricultural, or other restricted construction, is not specifically listed on Schedule B, and the estimated cost is less than $1,000, or

(iii) The construction is industrial, is not specifically listed on Schedule B, and the estimated cost is less than $5,000, or

(iv) The construction is to reconstruct or restore residential (but not multiple residential) construction damaged or destroyed after December 31, 1941, by fire, flood, tornado, earthquake, act of God or the public enemy.

(8) (i) The construction is to reconstruct or restore agricultural construction damaged or destroyed after September 7, 1942, by fire, flood, tornado, earthquake, act of God or the public enemy, where the immediate reconstruction thereof is determined by the United States Department of Agriculture, in accordance with such administrative procedures as may be from time to time prescribed, to be essential to the agricultural program, provided, that within two weeks of such determination Form PD-200 is filed in accordance with the provisions of paragraph (f) of this order.

(ii) The construction is to reconstruct or restore industrial or other restricted construction damaged or destroyed after September 7, 1942, by fire, flood, tornado, earthquake, act of God or the public enemy, where the immediate reconstruction thereof is necessary for the prosecution of the war or the protection of public health or safety; provided that within five days of the damage or destruction notice thereof is given by telegraph to the War Production Board setting forth (i) the cause of the damage or destruction, (ii) the function of the building, structure or project which has been damaged or destroyed, (iii) the type of construction, (iv) why immediate reconstruction or restoration is necessary, and (v) the estimated cost of reconstruction; and provided further, that within two weeks of the giving of such telegraphic notice, Form PD-200 is filed in accordance with the provisions of paragraph (f) of this order.

Nothing contained in this subparagraph (8) shall be interpreted as a commitment that priorities assistance will be accorded to any particular construction authorized by the provisions of this subparagraph and the Director General for Operations may at any time either order said construction to cease or require any modification thereof that seems to him to be proper.

(9) The construction has been or is hereafter authorized by the Director of Priorities of the Office of Production Management or by the Director of Industry Operations or the Director General for Operations of the War Production Board by the issuance of:

(i) One of the preference rating orders or certificates listed on Schedule A attached hereto, as that schedule may be amended from time to time, according priorities assistance to the construction; or

(ii) An order specifically authorizing the construction, *Provided, however,* That the exceptions set forth in paragraphs (b) (7) (i), (b) (7) (ii), and (b) (7) (iii) shall not be construed to authorize separate or successive construction operations the aggregate cost of which over any continuous twelve-month period exceeds the amount specified in the applicable paragraph for the particular building, structure or project; not including in said aggregate cost the cost of any construction thereon during said period authorized under the provisions of paragraph (b) (9).

(c) *Prohibited deliveries.* No person shall accept an order for, sell, deliver, or cause to be delivered, material or construction plant which he knows, or has reason to believe, will be used in violation of the terms of this order.

(d) *Further construction limitations.* Nothing in this order shall be construed to authorize the use or delivery of any material, or the application or extension of any preference rating, in violation of the provisions of any conservation, limitation or other order or regulation heretofore or hereafter issued by the Director of Priorities, Office of Production Management, or by the Director General for Operations.

(e) *Orders or certificates not constituting authorization.* The assignment of a preference rating by a PD-1, PD-1A, or other certificate, or by any order other than those listed in Schedule A, shall not constitute authorization to begin construction.

(f) *Applications for authority to begin construction.* (1) If the applicant requires priorities assistance for the proposed construction, an application shall be made for the appropriate preference rating order or certificate listed on Schedule A on the form referred to therein.

(2) Where the applicant does not require priorities assistance, application for specific authorization to begin construction referred to in paragraph (b) (9) (ii) hereof may be made by filing Form PD-200 Revised, or such other forms as may hereafter be prescribed, together with a statement showing: (i) that no priorities assistance is requested; (ii) whether any previous application for authorization has been denied, and, if so, the reasons therefor and (iii) the total value of all construction on the particular building, structure or project in the preceding twelve-month period. Such forms or statements are to be filed as prescribed on Schedule A for the filing of applications for preference rating assistance for Preference Rating Order P-19-h.

(3) In applying either for priority assistance or for authorization to begin construction, the applicant should also submit additional information as to the necessity for the proposed construction, any exceptional hardships which the restrictions of this order impose upon him, the effect on employment conditions if the application is denied, and any other pertinent facts.

(g) *Violations.* Any person who wilfully violates any provision of this order or who wilfully furnishes false information to the Director General for Operations in connection with this order is guilty of a crime, and upon conviction may be punished by fine or imprisonment. In addition any such person may be prohibited from making or obtaining further deliveries or from processing or using material under priority control and may be deprived of priorities assistance by the Director General for Operations.

(h) *Communications.* Applications, communications and reports under this order shall, unless otherwise directed, be addressed to, War Production Board, Washington, D. C. Ref: L-41.

Those relating to residential construction shall in addition be conspicuously marked "Res.", those relating to multiple residential construction "M. R.", those relating to agricultural construction, "Agr.", those relating to industrial construction, "Ind.", and those relating to other restricted construction, "O. R."

(P.D. Reg. 1, as amended, 6 F.R. 6680; W.P.B. Reg. 1, 7 F.R. 561; E.O. 9024, 7 F.R. 329; E.O. 9040, 7 F.R. 527; E.O. 9125, 7 F.R. 2719; sec. 2 (a), Pub. Law 671, 76th Cong., as amended by Pub. Laws 89 and 507, 77th Cong.)

Issued December 5th, 1942.

ERNEST KANZLER,
Director General for Operations.

SCHEDULE A[1]

The following preference rating orders and certificates are listed pursuant to paragraph (b) (11) (i) of the above order. A general description of the type of construction covered by each, the appropriate application form and where such form should be filed, are given solely for purposes of identification.

Preference rating order	Type of construction	Application forms	Where filed
P-14-a P-14-b	Shipyards and shipways	No form	Maritime Commission Washington, D. C.
P-19 P-19-a	Buildings, structures and projects important to the war effort and essential civilian needs, other than housing.	No further application accepted under P-19 and P-19-a. Apply for P-19-h.	
P-19-d P-19-g	Publicly financed housing	Application is made only by the Federal agency principally interested in the construction.	
P-19-e	Public roads	Application is made by or through the Public Roads Administration of F. W. A.	
P-19-h P-19-i	Buildings, structures and projects important to the war effort and essential civilian needs, other than War Housing.	Form PD-200	At the following places or such other places as may be prescribed: Residential (except farm dwellings): With field office of FHA having jurisdiction of the site. Agricultural (including farm dwellings): With Dept. of Agriculture County War Board having jurisdiction over location of the site. All other types of construction: With War Production Board, Washington, D. C.
P-41	Construction of air transport facilities.	(Expired October 1, 1942).	
P-55 P-55 Amended	Privately financed war housing.	Form PD-105	With FHA field office having jurisdiction over location of site.
P-98-b	Construction related to petroleum enterprises as defined and limited therein.	See orders in M-68 series	
P-110	Remodeling of housing in defense area.	Form PD-400	With field office of FHA having jurisdiction over location on site.
P-130	Construction of certain facilities other than buildings by telephone companies, and	See order	With War Production Board, Washington, D. C., or such other place as may be prescribed.
	Construction by such companies of facilities necessary to serve defense projects.	PD-685	
P-132	Construction of certain facilities other than buildings by telegraph companies, and	See order	With War Production Board, Washington, D. C., or such other place as may be prescribed.
	Construction by such companies of facilities necessary to serve defense projects.	PD-683	
Certificates PD-3 and PD-3A.	Principally buildings, structures and projects owned or to be owned by the Army, Navy or certain other Governmental agencies.	PD-3A	With the contracting or procurement official having jurisdiction over the contract.

SCHEDULE B

The following buildings, structures or projects are listed pursuant to paragraph (b) (7) (i) of the above order.

The building, structure or project has as its principal designed function:

(1) Public or private amusement, entertainment or recreation, with the exception of playgrounds for children.

(2) Occupancy by not more than five establishments selling or dispensing goods, merchandise, food or drink, or providing services.

(3) Use as a club, lodge, fraternity or sorority house, association, auditorium or assembly hall.

INTERPRETATION 1

(a) Paragraph (a) of Conservation Order No. L-41, as amended, places in different classes the construction of various buildings, structures or projects, and paragraph (b) (7) provides the limits within which the several classes of construction may be begun without authorization. Any building or structure shall be classified in accordance with such provisions unless it constitutes a part of a "project" as defined below, in which event the classification of the project shall control.

(b) The word "project" as used in paragraphs (a) (3), (a) (4), (a) (5), (a) (6), and (a) (7) in defining the classes of construction and as used elsewhere in the order, means all separate buildings, structures, or units of construction situated in close proximity to each other and integrated to serve a single general use; it does not mean a particular construction operation or job.

Generally speaking whether separate buildings, structures or units of construction together constitute a project depends upon the exact engineering, functional, and other phases of the particular construction involved. The fact that one or more buildings, structures, or units of a single project come within a class or classes of construction different from the class within which the project falls is of no consequence, inasmuch as the class within which the entire project falls will be determined by its predominant designed use in accordance with paragraph (b) of Interpretation No. 1 of Conservation Order L-41 issued June 6, 1942. However, a separate building, structure, or unit of construction situated in close proximity to a project, whether of the same or different classification, is not part of said project, unless it is integrated to serve the same general use as said project.

In no case shall a single building or structure be subdivided into more than one project for the purpose of this order.

(c) "Total cost of labor" as used in paragraph (a) (9) means (1) actual money outlay for labor employed in the construction; and (2) estimated value of all labor performed in the construction not entailing actual money outlay, excluding only the labor of an owner or tenant and members of the owner's or tenant's immediate family residing with him, on a building, structure or project owned or leased by him. (Issued September 5, 1942.)

INTERPRETATION 2

(a) "Construction", as defined in paragraph (a) (2), includes the laying of asphalt tile, linotile, cork tile, rubber tile, and linoleum, if the same is cemented to or in any way is affixed to the construction.

(b) The application of siding or roofing is "construction," as the word is used in paragraph (a) (2), where such siding or roofing is applied to a portion of a building or structure which is not in need of "repair," as the word is used in paragraph (a) (11). (Issued November 6, 1942.)

[F. R. Doc. 42-12303; Filed, December 5, 1942; 11:17 a. m.]

[1] As amended Dec. 5, 1942.

PART 1217—COCOA

[Conservation Order M-145 as Amended Dec. 5, 1942]

The uncertainty of shipments of cocoa beans from abroad and the fulfillment of requirements for the defense of the United States have created a shortage in the supply of cocoa beans for defense, for private account, and for export; and the following order is deemed necessary and appropriate in the public interest and to promote the national defense:

§ 1217.1 *Conservation Order M-145*—(a) *Applicability of Priorities Regulation 1.* This order, and all transactions affected thereby, are subject to the provisions of Priorities Regulation No. 1 (Part 944), as amended from time to time, except to the extent that any provision hereof may be inconsistent therewith, in which case the provisions of this order shall govern.

(b) *Definitions.* For purposes of this order, "process" means subjecting cocoa beans to any grinding, pressing, or other processing operation.

(c) *General restrictions.* (1) Except as otherwise permitted in this paragraph, no person shall process more cocoa beans during any quota period than his quota for that period, such period and quota to be determined by the Director General for Operations from time to time.

(2) Any person who processes cocoa beans shall sell the products resulting from such processing equitably to purchasers and shall not favor purchasers

who buy other products from him nor discriminate against purchasers who do not buy other products from him.

(3) Any person who has had, or has, cocoa beans owned by him processed for his account by some other person shall, for purposes of computing his quota and charges thereto, consider such cocoa beans as though processed by him.

(4) Notwithstanding the foregoing restrictions, any person may, without charge to his quota, process such amount of cocoa beans as may be necessary to provide him or any other person with material to fill actual orders with or for any of the following persons:

(i) The Army, the Navy, the Defense Supplies Corporation, Veterans Administration hospitals and homes, or any Agency of the United States Government for supplies to be delivered to, or for the account of, the government of any country pursuant to the Act of March 11, 1941, entitled "An Act to Promote the Defense of the United States" (Lend-Lease Act).

(ii) The American Red Cross or the United Service Organizations.

(iii) Any person for retail sale through concession restaurants at army or navy camps or through outlets not operating for private profit and established primarily for the use of army or navy enlisted personnel within army or navy establishments or on army or navy vessels, including post exchanges, sales commissaries, officers' messes, servicemen's clubs, and ship service stores.

(5) All quotas hereunder shall be calculated quantitatively in terms of pounds.

(6) During any quota period, any person who processes cocoa beans may utilize not more than one-tenth of his quota for the preceding quota period if the portion of the quota so carried over was not utilized by him during such preceding quota period.

(7) On and after December 15, 1942, no person shall accept delivery of or use any material produced from cocoa beans for any of the following purposes in connection with production for sale:

(i) Manufacturing chocolate shot,

(ii) Manufacturing hollow-molded novelty items,

(iii) Manufacturing solid chocolate novelty items,

(iv) Partially or wholly coating novelty items,

(v) Partially or wholly coating miniature candy pieces weighing, when coated, less than 1/60th of a pound, except all-nut (glazed or unglazed), all-peanut, or all-fruit (fresh, dried or preserved) pieces,

(vi) Applying chocolate decoration (other than "stringing"), by spray-gun, pastry-bag, or other methods, to chocolate-coated candy pieces.

For purposes of this subparagraph, "novelty item" means any candy piece manufactured in a special shape commemorating, symbolizing, or representing any holiday, event, person, animal, or object.

(8) No person shall deliver any material produced from cocoa beans to any other person with knowledge or reason to believe that such other person is not entitled, pursuant to paragraph (c) (7), to accept delivery thereof.

(d) *Reports.* Every person who processes cocoa beans after May 11, 1942, shall execute and file with the War Production Board such reports and questionnaires as said Board may from time to time require.

(e) *Records.* Every person who processes cocoa beans shall keep and preserve, for a period of not less than two years, records which, upon examination, will disclose his total monthly inventory of cocoa beans, the amount of cocoa beans processed each month, and his monthly use of the products resulting from such processing.

(f) *Audit and inspection.* All records required to be kept by this order shall, upon request, be submitted to audit and inspection by duly authorized representatives of the War Production Board.

(g) *Applicability of order.* This order applies to all cocoa beans which on May 11, 1942, were in, or were thereafter brought into, the continental United States (excluding the Canal Zone and Alaska).

(h) *Violations.* Any person who wilfully violates any provision of this order, or who, in connection with this order, wilfully conceals a material fact or furnishes false information to any department or agency of the United States is guilty of a crime and, upon conviction, may be punished by fine or imprisonment. In addition, any such person may be prohibited from making or accepting further deliveries of or from processing or using material under priority control and may be deprived of priorities assistance.

(i) *Appeals.* Any person affected by this order who considers that compliance herewith would work an exceptional and unreasonable hardship upon him may appeal to the War Production Board, setting forth the pertinent facts and the reasons he considers that he is entitled to relief. The Director General for Operations may thereupon take such action as he deems appropriate.

(j) *Communications to the War Production Board.* All reports required to be filed hereunder and all communications concerning this order shall, unless otherwise directed, be addressed to: War Production Board, Washington, D. C., Ref: M-145.

(P.D. Reg. 1, as amended, 6 F.R. 6680; W.P.B. Reg. 1, 7 F.R. 561; E.O. 9024, 7 F.R. 329; E.O. 9040, 7 F.R. 527; E.O. 9125, 7 F.R. 2719; sec. 2 (a), Pub. Law 671, 76th Cong., as amended by Pub. Laws 89 and 507, 77th Cong.)

Issued this 5th day of December 1942.

ERNEST KANZLER,
Director General for Operations.

[F. R. Doc. 42-12911; Filed, December 5, 1942; 11:17 a. m.]

INTERPRETATION 1

Paragraph (c) (4) of Order M-145 permits any person to process, without charge to his quota, such amount of cocoa beans as may be necessary to provide material for filling certain types of orders. Some processing methods yield two materials—cocoa butter and cocoa powder. Cocoa butter is used for some products; cocoa powder is used for other products. Some quota-exempt orders may require the use of only one of the two materials. While Order M-145 does not prohibit the use of the other material in filling orders which are not quota-exempt, the processor is accountable for the quantity of such other material if he subsequently receives quota-exempt orders requiring such material. Therefore, he may process cocoa beans, without charge to his quota, to supply such other material for those orders only if and to the extent that the quantity of such other material for which he is accountable is insufficient. (Issued June 9, 1942.)

PART 1261—LABORATORY EQUIPMENT

[Limitation Order L-144 as Amended Dec. 5, 1942]

The fulfillment of requirements for the defense of the United States has created shortages in the supplies of laboratory equipment and the materials entering into the manufacture thereof for the war effort, for private account, and for export; and the following order is deemed necessary and appropriate in the public interest and to promote the national defense:

§ 1261.1 *General Limitation Order L-144*—(a) *Definition.* For the purpose of this order:

"Laboratory equipment" means material, instruments, appliances, devices, parts thereof, tools and operating supplies for laboratories, or for use in connection with operations usually carried on in laboratories, not including second-hand items. The term does not include reagent chemicals which are defined as any chemical prepared and packed for reagent use in laboratories.

(b) *General restrictions.* (1) No person shall sell, deliver, rent, purchase, acquire or accept delivery of laboratory equipment in which there is incorporated or used aluminum, chromium, copper, iron, magnesium, molybdenum, nickel, steel, tantalum, tin, titanium, any alloy of said metals, rubber, neoprene or other synthetic rubber, or non-cellulose base synthetic plastics, except: (i) pursuant to a purchase order or contract having certified thereon a statement in the following form, signed manually, or as provided in Priorities Regulation No. 7 by an official duly authorized for such purpose:

CERTIFICATION

The laboratory equipment herein ordered will be used or sold in conformity with the provisions of General Limitation Order No. L-144, with the terms of which the undersigned is familiar.

Name ----------

By ----------

Signature of duly authorized official

or,

(ii) Pursuant to a purchase order or contract from the Army or Navy of the United States, the United States Mari-

time Commission, the War Shipping Administration, the Coast and Geodetic Survey, the Civil Aeronautics Administration, the National Advisory Committee for Aeronautics, the Office of Scientific Research and Development, or the government of any of the following countries: Belgium, China, Czechoslovakia, Free France, Greece, Iceland, Netherlands, Norway, Poland, Russia, Turkey, United Kingdom, including its Dominions, Crown Colonies and Protectorates ,and Yugoslavia.

(2) No person shall make the certification described in the foregoing paragraph for the acquisition of any item or quantity of the same item of laboratory equipment having a value of $50.00 or more, except for resale, or when authorized by the Director General for Operations under paragraph (b) (2) (vi) of this order pursuant to application on Form PD-620; nor shall any person make said certification for the acquisition of any laboratory equipment except for resale or use for one or more of the following purposes:

(i) Research on, or production, analysis or testing of, materials.

(ii) Research by or for the United States Army, Navy, Maritime Commission, or any other department, or agency of the government of the United States, or of any foreign country entitled to deliveries under the Act of Congress of March 11, 1941, "An Act to Promote the Defense of the United States" (Lend-Lease Act).

(iii) Training of personnel for the United States Army, Navy, Maritime Commission, or any other department of the United States, or for the government of any foreign country entitled to deliveries under the Act of Congress of March 11, 1941, "An Act to Promote the Defense of the United States" (Lend-Lease Act).

(iv) To the extent necessary for the replacement of essential existing equipment in laboratories affecting the public health, and in United States government, state, county, and municipal laboratories.

(v) To the extent necessary for repair parts and operating supplies for the maintenance of existing essential equipment and activities in laboratories.

(vi) For any use which the Director General for Operations determines is necessary and appropriate in the public interest, pursuant to application on Form PD-620.

(3) Said certification shall constitute a representation to the War Production Board and to the person with whom the purchase order or contract is placed, that the subject matter of the order or contract will be used or sold in accordance with the provisions of this order. Every person concerned shall be entitled to rely on said certification, unless he knows or has reason to believe it to be false.

(4) No manufacturer shall use any scarce material described in foregoing paragraph (b) (1), where and to the extent that the use of other material is practicable.

(c) *Applicability of Priorities Regulation No. 1.* This order and all transactions affected thereby are subject to the provisions of Priorities Regulation No. 1 (Part 944) as amended from time to time, except to the extent that any provision hereof may be inconsistent therewith, in which case the provisions of this order shall govern.

(d) *Records.* All persons to whom this order applies shall keep and preserve for not less than two years, accurate and complete records concerning inventories, production and sales, including copies of each purchase order or contract containing the certification hereinabove referred to.

(e) *Audit and inspection.* All records required to be kept by this order shall, upon request, be submitted to audit and inspection by duly authorized representatives of the War Production Board.

(f) *Reports.* All persons affected by this order shall execute and file with the War Production Board such reports and questionnaires as said Board shall from time to time request.

(g) *Violations.* Any person who wilfully violates any provision of this order, or who, in connection with this order, wilfully conceals a material fact or furnishes false information to any department or agency of the United States is guilty of a crime, and upon conviction, may be punished by fine or imprisonment. In addition, any such person may be prohibited from making or obtaining further deliveries of, or from processing or using, material under priority control and may be deprived of priorities assistance.

(h) *Appeal.* Any person affected by this order who considers that compliance herewith would work an exceptional and unreasonable hardship upon him, may appeal to the War Production Board setting forth pertinent facts and the reasons such person considers that he is entitled to relief. The Director General for Operations may thereupon take such action as he deems appropriate.

(i) *Communications.* All reports required to be filed hereunder or communications concerning this order, shall, unless otherwise directed, be addressed to: War Production Board, Safety and Technical Equipment Division, Technical and Scientific Equipment Section, Washington, D. C., Ref.: L-144.

(P.D. Reg. 1, as amended, 6 F.R. 6680; W.P.B. Reg. 1, 7 F.R. 561; E.O. 9024, 7 F.R. 329; E.O. 9040, 7 F.R. 527; E.O. 9125, 7 F.R. 2719; sec. 2 (a), Pub. Law 671, 76th Cong., as amended by Pub. Laws 89 and 507, 77th Cong.)

Issued December 5, 1942.

ERNEST KANZLER,
Director General for Operations.

[F. R. Doc. 42-12909; Filed, December 5, 1942; 11:17 a. m.]

PART 3078—MATERIAL ENTERING INTO THE PRODUCTION OF AUTOMOTIVE TIRE CHAINS AND CHAIN PARTS

[Limitation Order L-201 as Amended Dec. 5, 1942]

The fulfillment of requirements for the defense of the United States having created a shortage in the supply of steel, copper, molybdenum and other materials required in the production of tire chains, chain parts, and emergency unit chains for use on passenger automobiles and commercial vehicles for defense, for private account and export, the following order is deemed necessary and appropriate in the public interest:

§ 3078.1 *Limitation Order L-201*—(a) *Applicability of priorities regulations.* This order and all transactions affected thereby are subject to all applicable provisions of the priorities regulations of the War Production Board, as amended from time to time.

(b) *Protection of production schedules.* Producers under the terms of this order may, notwithstanding the provisions of Priorities Regulation No. 1 (Part 944), schedule the production of tire chains, chain parts and emergency unit chains when produced under this order, as if the orders therefor bore a rating of AA-2X.

(c) *Definitions.* For the purposes of this order:

(1) "Tire chain" means a complete metal chain assembly produced for use on a tire of a passenger automobile or a commercial vehicle for the purpose of increasing the traction of the tire.

(2) "Chain parts" means cross chains, locks, hooks, straps, plates, repair links, and side chains produced for use in repairing tire chains.

(3) "Emergency unit chain" means a chain assembly of the strap-on or single-chain type containing not more than two cross chains per unit.

(4 "Passenger automobile" means any passenger vehicle propelled by an internal combustion engine and having a seating capacity of less than eleven (11) persons.

(5) "Light truck" means a complete motor truck or truck-tractor with a gross vehicle weight rating of less than 9,000 pounds, as authorized by the manufacturer thereof, or the chassis therefor.

(6) "Medium and/or heavy motor truck" means a complete motor truck or truck-tractor with a gross vehicle weight rating of 9,000 pounds or more, as authorized by the manufacturer thereof, or the chassis therefor.

(7) "Truck trailer" means a complete semi-trailer or full trailer having a load-carrying capacity of 10,000 pounds or more, as authorized by the manufacturer thereof, and designed exclusively for the transportation of property or persons, or the chassis therefor.

(8) "Passenger carrier" means a complete motor coach for passenger transportation, having a seating capacity of not less than eleven (11) persons.

(9) "Off-the-highway motor vehicle" means a motor truck, truck-tractor and/or trailer, operating off the public

highway normally on rubber tires and specially designed to transport materials, property or equipment on mining, construction, logging or petroleum development projects.

(10) "Commercial vehicle" means any light, medium or heavy motor truck, truck-tractor, truck trailer, off-the-highway motor vehicle or passenger carrier.

(11) "Consumer" means the owner or operator of the vehicle for which tire chains, chain parts, or emergency unit chains are required, or the user of such tire chains, chain parts or emergency unit chains, for any other purpose.

(d) *Limitations on types and sizes of tire chains, chain parts and emergency unit chains.* (1) On and after October 31, 1942, no producer shall manufacture any tire chains, chain parts or emergency unit chains containing any metal other than low carbon steel, or any tire chains, chain parts or emergency unit chains which are metallically plated.

(2) On and after October 31, 1942, no producer shall manufacture any tire chains or chain parts except for the tire sizes specified in subparagraph (5) below, and of the types designated A, C, G and M in Tire Chain Specifications No. 7140, copyrighted by The Chain Institute, Inc., Chicago, Illinois, and published July 1, 1940.

(3) On and after October 31, 1942, no producer shall manufacture any reinforced tire chains or reinforced chain parts except for the tire sizes specified in subparagraph (5) below and of the said types A, C, G and M.

(4) On and after October 31, 1942, no producer shall manufacture emergency unit chains, either of standard weight or reinforced, except for the tire sizes specified in subparagraph (5) below.

(5) Tire sizes for which production is authorized shall be limited to the following:

(i) For passenger automobile tires: 6.00–16, 6.00:16 light car special; 6.50–16; 7.00–16, 7.50–16.

(ii) For commercial vehicle tires: 6.50–20/32 x 6; 7.00–20; 7.50–16; 7.50–17; 7.50–20/34 x 7; 8.25–20; 9.00–20; 9.75–20.

(e) *Production of specially sized equipment.* Notwithstanding the provisions of paragraphs (d) (2) (3) (4) and (5) above, on and after October 31, 1942, tire chains, chain parts and emergency unit chains, in types and sizes other than those enumerated respectively in paragraphs (d) (2) and (5), may be produced when specially ordered for delivery by the producer direct to the consumer.

(f) *Limitations on production*—(1) *For passenger automobiles.* Between October 31, 1942 and November 1, 1943, no producer shall use in the production of tire chains, chain parts or emergency unit chains for passenger automobiles more than sixteen per cent (16%) of the total weight of metals contained in all of the tire chains, chain parts and emergency unit chains (whether for passenger automobiles or commercial vehicles) sold by him during the period beginning April 1, 1941 and ending March 31, 1942: *Provided,* That not more than twenty-five per cent (25%) of the material so authorized may be used in the production of tire chains of the sizes authorized for passenger automobile tires in paragraph (d) (5) (i) of this order.

(2) *For commercial vehicles.* Between October 31, 1942 and November 1, 1943, no producer shall use in the production of tire chains, chain parts or emergency unit chains for commercial vehicles, more than twenty-four percent (24%) of the total weight of metals contained in all of the tire chains, chain parts and emergency unit chains (whether for passenger automobiles or commercial vehicles) sold by him during the period beginning April 1, 1941 and ending March 31, 1942: *Provided,* That not more than twenty-five per cent (25%) of the material so authorized may be used in the production of tire chains of the sizes authorized for commercial vehicle tires in paragraph (d) (5) (ii) of this order.

(3) In fixing production quotas as provided for in paragraphs (f) (1) and (2) (ii) above, production during the base period on orders for delivery to or for the account of the Army, Navy and other persons enumerated in paragraph (g) below shall not be included.

(g) *Exceptions to applicability of this order.* The terms and restrictions of this order shall not apply to tire chains, chain parts or emergency unit chains sold to or produced under contracts or orders for delivery to or for the account of:

(1) The Army or Navy of the United States, the United States Maritime Commission, the War Shipping Administration, the Panama Canal, the Coast and Geodetic Survey, the Coast Guard, the Civil Aeronautics Administration, the National Advisory Committee for Aeronautics, the Office of Scientific Research and Development;

(2) The government of any of the following countries: Belgium, China, Czechoslovakia, Free France, Greece, Iceland, Netherlands, Norway, Poland, Russia, Turkey, United Kingdom, including its Dominions, Crown Colonies and Protectorates, and Yugoslavia;

(3) Any agency of the United States Government for delivery to, or for the account of, the government of any country listed above, or any other country, including those in the Western Hemisphere, pursuant to the Act of March 11, 1941, entitled "An Act to Promote the Defense of the United States" (Lend-Lease Act).

(h) *Records.* All persons affected by this order shall keep and preserve for not less than two years accurate and complete records concerning production and sales.

(i) *Reports.* All persons affected by this order, shall execute and file with the War Production Board such reports and questionnaires as the Board shall from time to time request. No reports or questionnaires are to be filed by any person until forms therefor are prescribed by the War Production Board.

(j) *Audit and inspection.* All records required to be kept by this order shall, upon request, be submitted to audit and inspection by duly authorized representatives of the War Production Board.

(k) *Violations.* Any person who wilfully violates any provision of this order, or who, in connection with this order, wilfully conceals a material fact, or furnishes false information to any department or agency of the United States, is guilty of a crime, and upon conviction may be punished by fine or imprisonment. In addition, any such person may be prohibited from making or obtaining further deliveries of, or from processing or using, materials under priority control and may be deprived of priorities assistance.

(l) *Appeals.* Any person affected by this order who considers that compliance herewith would work an exceptional and unreasonable hardship upon him, may appeal to the War Production Board, setting forth pertinent facts and the reasons such person considers that he is entitled to relief. The Director General for Operations may thereupon take such action as he deems appropriate.

(m) *Communications.* All communications concerning this order shall, unless otherwise directed, be addressed to: War Production Board, Automotive Division, Washington, D. C., Ref: Order L-201.

(P.D. Reg. 1, as amended, 6 F.R. 6680; W.P.B. Reg. 1, 7 F.R. 561; E.O. 9024, 7 F.R. 329; E.O. 9040, 7 F.R. 527; E.O. 9125, 7 F.R. 2719; sec. 2 (a), Pub. Law 671, 76th Cong., as amended by Pub. Laws 89 and 507, 77th Cong.)

Issued this 5th day of December 1942.

ERNEST KANZLER,
Director General for Operations.

[F. R. Doc. 42-12910; Filed, December 5, 1942; 11:17 a. m.]

PART 3120—LITHIUM ORE

[General Conservation Order M-253]

The fulfillment of requirements for the defense of the United States has created a shortage in the supply of lithium ore for defense, for private account and for export; and the following order is deemed necessary and appropriate in the public interest and to promote the national defense:

§ 3120.1 *General Conservation Order M-253*—(a) *Definitions.* For the purpose of this order:

(1) "Lithium ore" means any or all of the following minerals: spodumene, lepidolite, amblygonite, triphylite, petalite, and zinnwaldite. It also includes crude lithium sodium phosphate and all other lithium bearing ores and concentrates. The term does not include lithium compounds as defined in Order M-191.

(2) "Supplier" means any person engaged in the mining of lithium ore, in the milling, treating, or concentrating of lithium ore, or in the selling of lithium ore.

(3) "Consumer" means any person who uses, consumes, or processes lithium ore in the manufacture of lithium compounds (as distinguished from lithium ore), of ceramics, or of any other product, or in any other process.

(4) "Use" means to use, consume, or process lithium ore in the manufacture of lithium compounds of ceramics, or of any other product, or in any other process. The term does not include the milling, treating, or concentrating of lithium ore where the resultant product is lithium ore.

(b) *Restrictions on delivery and use.* On and after December 5, 1942, no supplier shall make delivery of or use lithium ore, and no consumer shall accept delivery of or use lithium ore, except as authorized by the Director General for Operations. This restriction shall apply not only to lithium ore which shall be produced on and after such date but also to all stocks and reserves of lithium ore held within the continental limits of the United States as of such date, whether in private or Government hands. The Director General for Operations will from time to time allocate the supply of lithium ore and specifically direct the manner and quantities in which deliveries to or by particular persons shall be made or withheld; and he may also from time to time direct or prohibit particular uses of lithium ore. Such allocations and directions will be made to insure the satisfaction of defense requirements of the United States, both direct and indirect, and may be made, in the discretion of the Director General for Operations, without regard to any preference ratings assigned to particular contracts or purchase orders. The Director may also take into consideration the possible dislocation of labor and the necessity of keeping a plant in operation, so that it may be able to fulfill war orders and essential civilian requirements.

(c) *Reports.* On or before the 20th day of December 1942, and on or before the 10th day of each calendar month thereafter, each supplier shall file with the War Production Board, in quadruplicate, Form PD-728, and each consumer shall file with the War Production Board, in quadruplicate, Form PD-729. All persons affected by this order, including suppliers and consumers and persons owning or using products manufactured of lithium ore, shall file such other reports as may be required from time to time by the War Production Board.

(d) *Miscellaneous provisions*—(1) *Applicability of priorities regulations.* This order and all transactions affected thereby are subject to all applicable provisions of the priorities regulations of the War Production Board, as amended from time to time.

(2) *Communications to War Production Board.* All reports required to be filed hereunder, and all communications concerning this order, shall, unless otherwise directed, be addressed to: War Production Board, Miscellaneous Minerals Division, Washington, D. C. Ref.: M-253.

(3) *Violations.* Any person who wilfully violates any provision of this order, or who, in connection with this order, wilfully conceals a material fact or furnishes false information to any department or agency of the United States is guilty of a crime, and upon conviction may be punished by fine or imprisonment. In addition, any such person may be prohibited from making or obtaining further deliveries of, or from processing or using, material under priority control and may be deprived of priorities assistance.

(P.D. Reg. 1, as amended, 6 F.R. 6680; W.P.B. Reg. 1, 7 F.R. 561; E.O. 9024, 7 F.R. 329; E.O. 9040, 7 F.R. 527; E.O. 9125, 7 F.R. 2719; sec. 2 (a), Pub. Law 671, 76th Cong., as amended by Pub. Laws 89 and 507, 77th Cong.)

Issued this 5th day of December 1942.

ERNEST KANZLER,
Director General for Operations.

[F. R. Doc. 42-12912; Filed, December 5, 1942; 11:18 a. m.]

PART 3129—SULFURIC ACID

[General Preference Order M-257]

The fulfillment of requirements for the defense of the United States has created a shortage in the supply of oleum and other materials used in the manufacture of explosives for defense, for private account and for export, and the following order is deemed necessary and appropriate in the public interest and to promote the national defense:

§ 3129.1 *General Preference Order M-257*—(a) *Definitions.* (1) "Sulfuric acid" means all grades or strengths of sulfuric acid, including oleum and spent sulfuric acid.

(2) "Oleum" means sulfuric acid plus sulfur trioxide and is the product also known by the name of fuming sulfuric acid.

(3) "Spent sulfuric acid" means that grade of sulfuric acid produced in the manufacture of military explosives and in the refining of petroleum.

(4) "Producer" means any person engaged in the production of sulfuric acid.

(b) *Allocations.* The Director General for Operations may allocate sulfuric acid to specified persons. He may direct the specific quantities in which deliveries shall be made to and accepted by specified persons, and direct or prohibit specified uses of sulfuric acid and the production by any person of sulfuric acid, or any strength or grade thereof. Allocations and directions will be made to insure the satisfaction of war requirements of the United States and may include allocations or directions respecting spent acid where necessary in the opinion of the Director, to promote, or prevent the curtailment of, the production of oleum and of military explosives. Allocations or directions may be made to eliminate cross-hauling and may be made without regard to any preference ratings assigned to particular contracts.

(c) *Applications and reports.* (1) Each producer of sulfuric acid and each other person who delivers spent sulfuric acid shall, on or before the 10th day of each month commencing with January 1943, file with the War Production Board, Form PD-601, in the manner prescribed therein, subject to the following special instructions:

(i) Copies of Form PD-601 may be obtained at local field offices of the War Production Board.

(ii) Prepare two copies and forward one to the War Production Board, Chemicals Division, Washington, D. C., Ref.: M-257, retaining the second copy for your files.

(iii) In the heading, under name of chemical, specify sulfuric acid; under WPB Order No., specify M-257; under name of company, state your name and mailing address; under unit of measure, specify tons (of 2,000 pounds each).

(iv) In the caption "This schedule is for deliveries to be made during the month of _____ 194__", strike out the words "to be" and insert the month preceding the month in which your report is filed, and the year.

(v) Insert in Column 1 the name of each customer to whom in the preceding month you shipped sulfuric acid in tank truck, tank car, tank barge or pipe line. Shipments by other means, including drum or carboy, are not to be listed separately. All persons to whom you shipped by such other means in the prior month will be lumped in Table I under the title "all others". If you consume all or part of your own production of sulfuric acid you will list yourself as a customer in Column 1.

(vi) In Columns 3 and 8, specify strength in degrees Baumé or percentage of sulfuric acid.

(vii) Leave blank Columns 5, 6 and 7.

(viii) In heading "Quantity ordered" at top of Column 4, strike out word "ordered" and substitute word "delivered".

(2) The Director General for Operations may require each person affected by this order to file such other reports as may be prescribed, and may issue further special directions to any such person with respect to preparing and filing Forms PD-601.

(d) *Miscellaneous provisions*—(1) *Applicability of priorities regulations.* This order and all transactions affected hereby are subject to all applicable provisions of the Priorities Regulations of the War Production Board, as amended from time to time.

(2) *Violations.* Any person who wilfully violates any provision of this order, or who, in connection with this order, wilfully conceals a material fact or furnishes false information to any department or agency of the United States is guilty of a crime, and upon conviction may be punished by fine or imprisonment. In addition, any such person may be prohibited from making or obtaining further deliveries of, or from processing or using, material under priority control and may be deprived of priorities assistance.

(3) *Appeals.* Any appeal from the provisions of this order shall be made by filing a letter in triplicate, referring to the particular provision appealed from and stating fully the grounds of the appeal.

(4) *Communications to War Production Board.* All reports required to be

filed hereunder, and all communications concerning this order, shall, unless otherwise directed, be addressed to: War Production Board, Chemicals Division, Washington, D. C., Ref: M-257.

(P.D. Reg. 1, as amended, 6 F.R. 6680; W.P.B. Reg. 1, 7 F.R. 561; E.O. 9024, 7 F.R. 329; E.O. 9040, 7 F.R. 527; E.O. 9125, 7 F.R. 2719; sec. 2 (a), Pub. Law 671, 76th Cong., as amended by Pub. Laws 89 and 507, 77th Cong.)

Issued this 5th day of December 1942.

ERNEST KANZLER,
Director General for Operations.

[F. R. Doc. 42-12913; Filed, December 5, 1942; 11:18 a. m.]

PART 1176—IRON AND STEEL CONSERVATION

[Amendment 1 to General Conservation Order M-126 as Amended Nov. 30, 1942]

General Conservation Order M-125 [7 F.R. 9941] (§ 1176.1) is hereby amended in the following respects:

1. By amending the item on List A which reads:

	Governing date
Cans, containers, closers and closures:	
Cans or containers for	None
Anti-freeze (under 5 gal. size).	
Artist supplies.	
Tobacco products.	
Bouillon cubes.	
Candy.	
Caviar.	
Chalk.	
Coffee.	
Cloves.	
Incense.	
Lawn seed.	
Nuts.	
Pencils.	
Phonograph needles.	
Playing cards.	
Razor blades—except metal holders which are integral parts of the mechanism for inserting blades into safety razors.	
Sponges.	
Staples.	
Tennis balls.	
Toilet water.	
Yarn.	
Cosmetics and toiletries	July 15, 1942
Closers for paper and cellophane bags—except bags for 25 lb. content or more	Nov. 5, 1942
Closures for glass coffee containers—except that such closures may be processed until December 1, 1942 from distressed stocks of black plate lithographed on or before September 3, 1942	None
Closures for cosmetics and toiletries	July 15, 1942

to be and read as follows:

Cans, containers and closures for	None.
Anti-freeze (under 5 gal. size).	
Artist supplies.	
Tobacco products.	
Bouillon cubes.	
Candy.	
Caviar.	
Chalk.	
Coffee—except that closures for glass containers may be processed until December 1, 1942 from distressed stocks of black plate lithographed on or before September 3, 1942.	
Gloves.	
Incense.	
Lawn seed.	
Nuts.	
Pencils.	
Phonograph needles.	
Playing cards.	
Razor blades—except metal holders which are integral parts of the mechanism for inserting blades into safety razors.	
Sponges.	
Staples.	
Tennis balls.	
Toilet water.	
Yarn.	
Cosmetics and toiletries	July 15, 1942
Closers for paper and cellophane bags—except bags for 25 lb. content or more	Nov. 5, 1942

2. By deleting the item on List A which reads:

Oil well pumping units[1]—except	Nov. 5, 1942
Brackets.	
Cranks.	
Equalizers.	
Pitmans.	
Reduction gears and case.	
Saddle bearings.	
Steel pin connections.	
Washers.	

3. By amending the item on List S which reads:

Milk storage tanks, milk receiving tanks and milk weigh tanks—except that where permitted materials cannot be secured, the provisions of paragraph (d) (4) shall be deemed to apply	Nov. 5, 1942

to be and read as follows:

	_____, Nov. 5, 1942.
Milk storage tanks, milk receiving tanks and milk weigh tanks—except that where permitted materials cannot be secured, a further exemption is hereby granted for the minimum period of time necessary to obtain such permitted materials but in no event later than April 30, 1943.	

(P.D. Reg. 1, as amended, 6 F.R. 6680; W.P.B. Reg. 1, 7 F.R. 561; E.O. 9024, 7 F.R. 329; E.O. 9040, 7 F.R. 527; E.O. 9125, 7 F.R. 2719; sec. 2 (a), Pub. Law 671, 76th Cong., as amended by Pub. Laws 89 and 507, 77th Cong.)

Issued this 5th day of December 1942.

ERNEST KANZLER,
Director General for Operations.

[F. R. Doc. 42-12954; Filed, December 7, 1942; 11:43 a. m.]

PART 1198—GLASS CONTAINER AND CLOSURE SIMPLIFICATION

[Schedule E to Limitation Order L-103]

GLASS CONTAINERS FOR PROTECTIVE COATINGS

§ 1198.6 *Schedule E to Limitation Order L-103*—(a) *Definitions.* For the purposes of this schedule:

(1) "Protective coatings" means paints (including paste water paints), varnishes, lacquers, shellacs, stains, linseed oil, turpentine, benzine, mineral spirits, varnish and paint removers, thinners and driers. The term shall not include inks or artists' supplies.

(2) A "standard glass container for protective coatings" means:

(i) A glass container described in Exhibits E-1 to E-8, inclusive, of this schedule;

(ii) A glass container described in Exhibits 6, 7, 10, 11, 15, 16, 18 and 24 of Limitation Order L-103;

(iii) The containers marked "gallon" and "half-gallon" in Exhibit 33 of Limitation Order L-103;

which possesses the finish prescribed for the respective container in the said Exhibits or any other Glass Container Association standard finish which is interchangeable therewith without alteration of the specified body mold.

(b) *Restrictions on use.* With the exceptions set forth in paragraph (c) of this schedule, on and after January 1, 1943,

(1) No person shall use a glass container other than a standard glass container as herein defined for the packaging of protective coatings for sale or for sample purposes.

(2) No person shall use the standard glass container described in Exhibit E-3 of this schedule for the packing, for sale or for sample purposes, of any commodity herein described as protective coatings, except:

(i) Those which require more than one pint of thinners (whether oil, varnish, spirit or water) per gallon to be added to the finished product, in order to make such product ready for use, and

(ii) Colors in oil and japan, and other tinting colors in paste form.

(3) No person shall use any standard glass containers with a finish larger than 38 mm. for the packing, for sale or for sample purposes, of shellacs and clear varnishes, and jobbing items (including but not limited to linseed oil, turpentine, benzine, mineral spirits, lacquer thinners, varnish and paint removers, and driers).

(c) *Exceptions.* (1) Nothing in this schedule shall prevent the use for the packaging of protective coatings of any non-standard glass containers which were completely manufactured on or before the 1st day of January, 1943, and in the hands of the user thereof on or before the 1st day of March, 1943: *Provided, however,* That, on and after December 7th, 1942, no person shall pack, for sale or for sample purposes, any product herein defined as protective coatings, except those described in paragraph (b) (2) of this order, in any glass container having a capacity of one quart or less with a finish size of more than 63 mm.

(2) Nothing in this schedule shall restrict the sale, delivery, use or manufacture of glass containers, made from a mold actually in existence on the 7th day of December, 1942, which have an overflow capacity of between 65 and 70

fl. oz. or between 130 and 140 fl. oz.; but such molds may not be replaced except in accordance with paragraph (d) of this schedule.

(3) Lettering on standard glass containers for protective coatings shall be limited to the manufacturers' identification (which may include trademark, name, symbol), place of manufacture, date of manufacture by year, design number, and mold or cavity number.

(d) *Manufacture.* On and after the 7th day of December, 1942, no molds may be manufactured for a protective coating jar or finish which does not conform to the specifications of a standard glass container for protective coatings, nor may any mold for a glass container for protective coatings be replaced—whether because of wear or for any other reason—except by a mold which conforms to the said specifications.

(P.D. Reg. 1, as amended, 6 F.R. 6680; W.P.B. Reg. 1, 7 F.R. 561; E.O. 9024, 7 F.R. 329; E.O. 9040, 7 F.R. 527; E.O. 9125, 7 F.R. 2719; sec. 2 (a), Pub. Law 671, 76th Cong., as amended by Pub. Laws 89 and 507, 77th Cong.)

Issued this 7th day of December 1942.

ERNEST KANZLER,
Director General for Operations.

EXHIBIT 1 OF SCHEDULE E

Standard Glass Container—Paint

ANY INTERCHANGEABLE FINISH MAY BE USED.

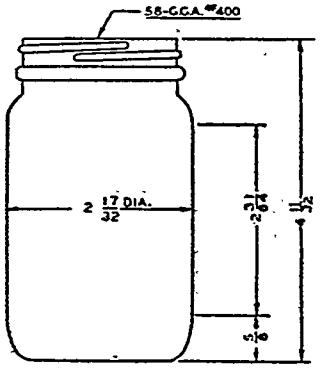

OVERFLOW CAPACITY—8¾ OZS.
GLASS WEIGHT—6 OZS.

EXHIBIT 2 OF SCHEDULE E

Standard Glass Container—Paint

ANY INTERCHANGEABLE FINISH MAY BE USED.

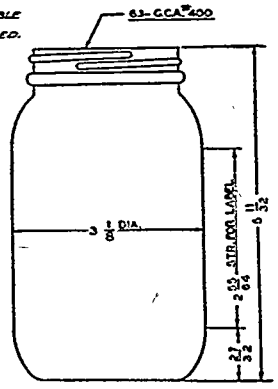

OVERFLOW CAPACITY—17 OZS.
GLASS WEIGHT 9¼ OZS.

EXHIBIT 3 OF SCHEDULE E

Standard Glass Container—Paint

ANY INTERCHANGEABLE FINISH MAY BE USED

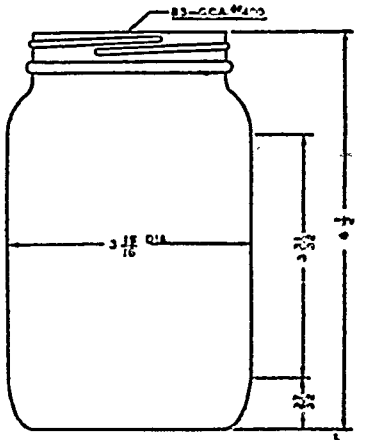

OVERFLOW CAPACITY—34 OZS. GLASS WEIGHT—14 5/8 OZS.

EXHIBIT 4 OF SCHEDULE E

Standard Glass Container—N. M. Round

ANY INTERCHANGEABLE FINISH MAY BE USED

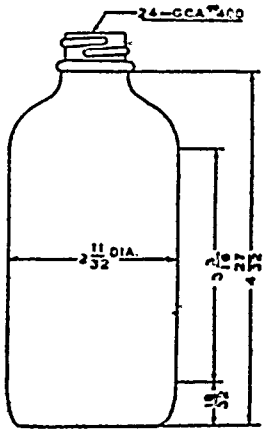

CAPACITY—8 OZS. GLASS WEIGHT—5 3/4 OZS.

EXHIBIT 5 OF SCHEDULE E

Standard Glass Container—N. M. Round

ANY INTERCHANGEABLE FINISH MAY BE USED

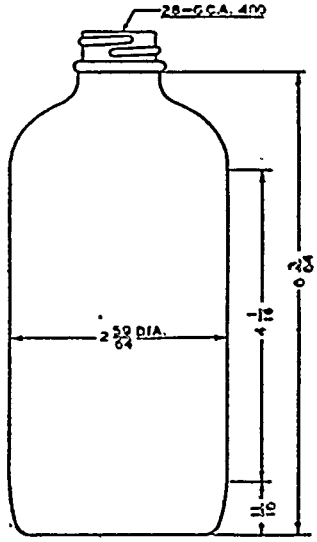

CAPACITY—16 OZS. GLASS WEIGHT—9 13/16 OZS.

EXHIBIT 6 OF SCHEDULE E

Standard Glass Container—N. M. Round

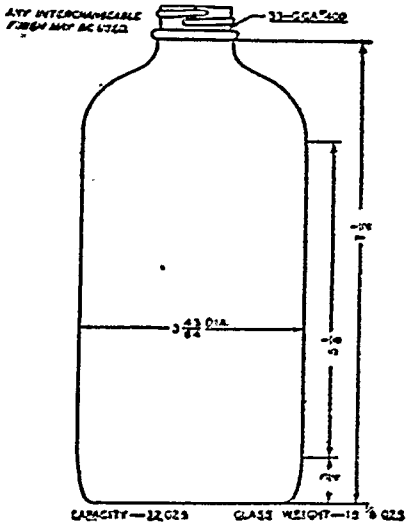

CAPACITY—22 OZS. GLASS WEIGHT—12 7/8 OZS.

EXHIBIT 7 OF SCHEDULE E

Standard Glass Container—N. M. Round

ANY INTERCHANGEABLE FINISH MAY BE USED

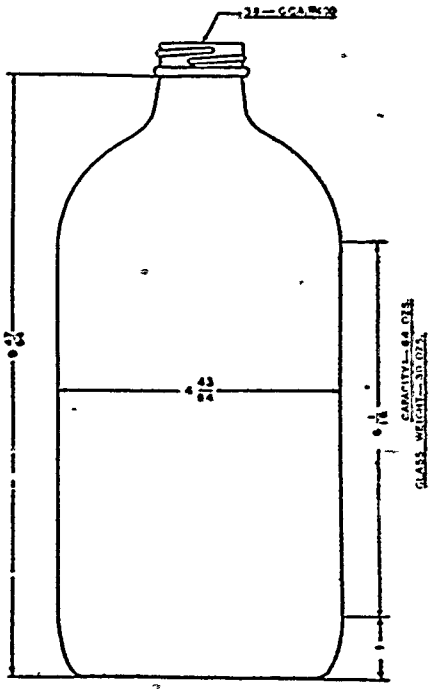

EXHIBIT 8 OF SCHEDULE E

Standard Glass Container—N. M. Round

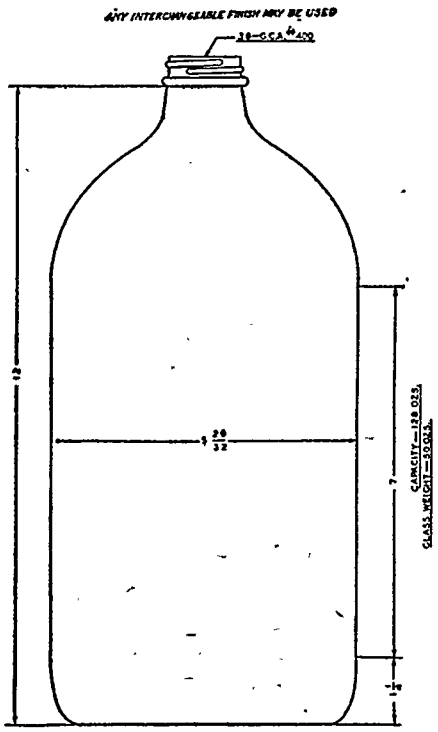

[F. R. Doc. 42-12941; Filed, December 7, 1942; 11:06 a. m.]

PART 1204—PHTHALIC ALKYD RESINS

[General Preference Order M-139]

The fulfillment of requirements for the defense of the United States has created a shortage in the supply of phthalic alkyd resins for defense, for private account and for export; and the following order is deemed necessary and appropriate for the public interest and to promote the national defense:

§ 1204.1 *General Preference Order M-139*—(a) *Definitions.* For the purpose of this order:

(1) "Phthalic alkyd resins" means the reaction product, in solid, liquid or solution form, of phthalic anhydride or phthalic acid with polyhydric alcohol, whether or not modified with rosin oil, or oil acids, but excluding any such resins modified with phenol or phenolic materials.

(2) "Supplier" means any person who produces phthalic alkyd resins (including producers who consume all or part of their own production of such resins), or who purchases phthalic alkyd resins from a producer for purpose of resale without further processing or admixing.

(b) *Restrictions on use and delivery of phthalic alkyd resins.* (1) On and after January 1, 1943, no supplier shall use or deliver phthalic alkyd resins, and no person shall accept delivery of phthalic alkyd resins from a supplier, except as specifically authorized by the Director General for Operations upon application pursuant to paragraph (e), or as provided in paragraphs (c) or (d).

(2) Each person specifically authorized to accept delivery of phthalic alkyd resins shall use such phthalic alkyd resins for the purpose authorized, except as otherwise specifically directed by the Director General for Operations.

(3) The Director General for Operations in his discretion may at any time issue special directions to any person with respect to the use, delivery or transportation of phthalic alkyd resins by such person, or of products made from phthalic alkyd resins allocated to such person, notwithstanding the provisions of paragraphs (c) or (d), or special directions to any producer with respect to the kinds of alkyd resins which he may or must manufacture.

(c) *General exemptions.* (1) Nothing contained in this order shall restrict the use and delivery by any person other than a supplier, of stocks of phthalic alkyd resins held by such person on January 1, 1943; or the use or delivery by any person, including a supplier, of stocks of protective coatings, fabric or paper coatings, molding compounds, or ink held by such person or supplier on January 1, 1943.

(d) *Small order exemptions.* (1) Any person may accept delivery of, and any supplier may use, 750 pounds or less of phthalic alkyd resins (solvent free basis) in the aggregate during any one calendar month without specific authorization, provided that such person (or supplier) has not been specifically authorized to use or accept delivery of any quantity of phthalic alkyd resins during such month.

(2) No delivery of 50 pounds or more of phthalic alkyd resins (solvent free basis) shall be made or accepted pursuant to this paragraph unless and until the person accepting delivery shall certify in writing to the person making delivery that such delivery is accepted within the terms of paragraph (d) (1) next above.

(3) Any supplier may deliver phthalic alkyd resins without specific authorization to any person entitled to accept delivery pursuant to this paragraph: *Provided,* That:

(i) No supplier shall deliver an aggregate amount of phthalic alkyd resins in any one calendar month pursuant to this paragraph in excess of 2% of the amount of phthalic alkyd resins which he is specifically authorized to deliver during such month; and

(ii) No supplier shall make deliveries during any month pursuant to this paragraph if such deliveries will prevent completion of any deliveries which have been specifically authorized for such month.

(e) *Applications and reports.* (1) Each person (or supplier) seeking authorization to use or accept delivery of phthalic alkyd resins during any calendar month, shall file application on Form PD-600 in the manner prescribed therein, subject to the following instructions for the purpose of this order:

Form PD-600. Copies of Form PD-600 may be obtained at local field offices of the War Production Board.

Time. Application shall be made on or before the 15th day of the month preceding the month for which authorization for use or delivery is sought. In emergency only, application may be made by wire and special authorization may be granted by return wire. Such emergency applications and temporary authorizations must be confirmed by application as soon as possible thereafter on Form PD-600, which will be returned with final authorization signed by the Director General for Operations.

Number of copies. A set of five copies shall be prepared; three completely filled out copies and a fourth copy, with only the heading and Columns 1 and 2 filled but, shall be certified and sent to the War Production Board, Chemicals Division, Washington, D. C., Ref: M-139; and the fifth complete copy shall be retained by the applicant. After having been signed by the Director General for Operations, one copy will be returned to the applicant and the incomplete copy (the fourth copy referred to above) will be forwarded to the supplier, except where supplier is "own stocks" (in which case the incomplete fourth copy need not be filed in the first place).

Number of sets. A separate set of PD-600 forms for applications shall be made for each preferred supplier and for each different delivery destination or plant of the applicant. The preferred supplier is the supplier from whom the applicant has regularly procured, or prefers to procure, phthalic alkyd resins.

Additional space. Where additional space is needed continue on reverse side of sheet, identifying subject matter by column number.

Heading. In the heading, under name of chemical, specify phthalic alkyd resins; under War Production Board order, specify M-139; under unit of measure, specify pounds, solvent free basis; under name of company, specify name and mailing address of applicant; under delivery destination, specify destination of phthalic alkyd resins ordered; under supplier, specify name of preferred supplier from whom the phthalic alkyd resins are to be procured; and specify the month and the year for which authorization for use or acceptance of delivery is sought.

Column 1. All grades may be grouped together and designated "X", except where the phthalic alkyd resins sought contain tung, oiticica or castor oil, in which case the trade name and number shall be stated in Column 1 for each quantity of such special resins requested in Column 2.

Column 2. Specify quantity requested for each item listed in Columns 3 and 4, in terms of pounds, solvent free basis.

Column 3. Fill in as follows, listing only those items for which authorization is requested:

For orders on hand:
- Protective coating.
- Fabric and paper coating.
- Printing ink.
- Other (specify).
- Export as phthalic alkyd resins.
- Resale as phthalic alkyd resins upon further authorization, or for paragraph (d) small orders.

For anticipated orders:
- Protective coating.
- Fabric and paper coating.
- Printing ink.
- Other (specify).
- Export as phthalic alkyd resins.
- Resale as phthalic alkyd resins upon further authorization, or for paragraph (d) small orders.

Miscellaneous: inventory as phthalic alkyd resins.

Column 4. State product use or uses of each item listed in Column 3, as follows:

Marine coating (Specify government contract or specification number, if any).

Aircraft coating (Specify government contract or specification number, if any).

Other (In addition to government contract or specification number, if any, describe and use briefly and accurately).

Leave Column 4 blank opposite miscellaneous, resale, and inventory in Column 3.

Opposite "export" in Column 3 specify in Column 4 the name of the individual company or government agency to whom the phthalic alkyd resin will be exported, the country to which the resins will be exported, the export license or contract number, and whether exported on Lend-Lease.

Product use shall be stated specifically for phthalic alkyd resins containing tung oiticica or castor oil, showing the exact application of such resins and the governing specification and contract number.

No specific statement or request need be made with respect to small order deliveries pursuant to paragraph (d) of this order.

Explanation. Requests made in Columns 3 and 4, and authorization granted on such requests, shall be subject to the following rules:

Orders on hand. Orders on hand include all orders placed at any time prior to the filing of PD-600 application, which require use of phthalic alkyd resins during the month for which allocation is requested.

Phthalic alkyd resins allocated to fill an order on hand, which is subsequently cancelled prior to the conversion of such phthalic alkyd resins into a primary product, shall revert to inventory and be reserved as phthalic alkyd resins, subject to the rules governing allocated inventory.

Anticipated orders. Phthalic alkyd resins allocated to fill anticipated orders for specified primary products and product uses may not be converted into such primary products in advance of receipt of actual orders for such products, except in the case of marine paint. Phthalic alkyd resins allocated to fill anticipated orders which fail to materialize shall revert to inventory, to be reserved as phthalic alkyd resins subject to the rules covering allocated inventory. In the event that phthalic alkyd resins are converted into a primary product, pursuant to an authorized order on hand which is subsequently cancelled, specific authorization of the Director General for Operations must be obtained for the use or disposition of such primary product.

Miscellaneous. Phthalic alkyd resins allocated for "miscellaneous" may be used for any purpose. Application for allocation for miscellaneous purposes shall not exceed 3% of the total quantity requested for all other purposes.

Inventory. Phthalic alkyd resins allocated for inventory shall not be used except as specially directed by the Director General for Operations, or except to fill orders authorized by the Director General for Operations pending arrival of the phthalic alkyd resins allocated to fill such orders. Upon the arrival of such phthalic alkyd resins, the allocated inventory shall be restored.

Specific authorization for the use of phthalic alkyd resins in inventory may be granted by the Director General for Operations to fill essential orders which were not anticipated in the regular allocation.

Columns 5, 6, 7, 8 and 9. Leave blank.

Column 10. Write in "above supplier" or "allocated inventory" for each corresponding quantity requested in Column 2, depending upon whether authorization for use and delivery is requested, or only for use.

Column 11. Write in "all grades", which shall include phthalic alkyd resins containing tung, oiticica and castor oil.

Columns 12, 13, 14, 15 and 16. Fill in as indicated, without distinction as to grade or whether the phthalic alkyd resins were allocated or unallocated, except in Column 15, in which the total quantity in stock shall be stated first, and underneath shall be stated "free stock _____", meaning that stock of phthalic alkyd resins exempt under paragraph (c) (1) of this order.

Columns 17, 18 and 19. Fill in Column 17 as indicated, and in Column 18 specify the total quantity of all phthalic alkyd resins, regardless of grade, to be procured from each of the applicant's other suppliers. In Column 19 write in "all grades".

Columns 20, 21, 22 and 23. Leave blank.

Applicability of authorization. Authorizations for use and delivery of phthalic alkyd resins shall be construed to refer to quantity rather than to the exact identity of phthalic alkyd resins. However, authorizations relating to phthalic alkyd resins containing tung oil, oiticica oil or castor oil shall be distinguished from authorizations relating to other types of phthalic alkyd resins. Phthalic alkyd resins may not be delivered pursuant to authorizations for previous months if such delivery interferes with completion of delivery authorized for the current month.

(2) Receipt by a supplier from the War Production Board of a copy of Form PD-600 signed by the Director General for Operations shall constitute authorization to such supplier to make the deliveries called for by the form.

(3) The Director General for Operations may require each person affected by this order to file such other reports as may be prescribed, and may issue special directions to any such persons with respect to preparing and filing Form PD-600.

(f) *Notification of customers.* Each supplier shall notify his regular customers as soon as possible of the requirements of this order, but failure to receive such notice shall not excuse any person from complying with the terms hereof.

(g) *Miscellaneous provisions.* (1) *Applicability of priorities regulations.* This order and all transactions affected hereby are subject to all applicable provisions of the War Production Board Priorities Regulations, as amended from time to time, except Priorities Regulation No. 13, which shall be subject to this order to the extent that it is inconsistent herewith.

(2) *Applicability of other orders.* Nothing contained in this order shall be construed to limit the requirements of Conservation Orders M-53, M-108, M-116 and M-158 or of any other order of the War Production Board now or hereafter issued which may impose additional restrictions on use or delivery of phthalic alkyd resins or products containing such resins: *Provided, however,* That nothing contained in General Exports Order M-148 shall be construed to permit use or delivery of phthalic alkyd resins in violation of this order. Phthalic alkyd resins manufactured from or combined with phenolic or para-phenylphenolic materials are subject to General Preference Orders M-246 and M-254, respectively, and not to this order.

(3) *Violations.* Any person who wilfully violates any provision of this order, or who, in connection with this order, wilfully conceals a material fact or furnishes false information to any department or agency of the United States is guilty of a crime, and upon conviction may be punished by fine or imprisonment. In addition, any such person may be prohibited from making or obtaining further deliveries of, or from processing or using, material under priority control and may be deprived of priorities assistance.

(4) *Communications to War Production Board.* All reports required to be filed hereunder, and all communications concerning this order, shall, unless otherwise directed, be addressed to: War Production Board, Chemicals Division, Washington, D. C. Ref.: M-139.

(P.D. Reg. 1, as amended, 6 F.R. 6680; W.P.B. Reg. 1, 7 F.R. 561; E.O. 9024, 7 F.R. 329; E.O. 9040, 7 F.R. 527; E.O. 9125, 7 F.R. 2719; sec. 2 (a), Pub. Law 671,

76th Cong., as amended by Pub Laws 89 and 507, 77th Cong.)

Issued this 7th day of December 1942.

ERNEST KANZLER,
Director General for Operations.

[F. R. Doc. 42-12944; Filed, December 7, 1942; 11:06 a. m.]

PART 1211—WOOD CASED PENCILS

[Revocation of General Limitation Order L-113]

Section 1211.1 *General Limitation Order L-113*, as amended, [7 F.R. 3322, 3663, 4159] is hereby revoked as of December 7, 1942.

(P.D. Reg. 1, as amended, 6 F.R. 6680; W.P.B. Reg. 1, 7 F.R. 561; E.O. 9024, 7 F.R. 329; E.O. 9040, 7 F.R. 527; E.O. 9125, 7 F.R. 2719; sec. 2 (a), Pub. Law 671, 76th Cong., as amended by Pub. Laws 89 and 507, 77th Cong.)

Issued this 7th day of December 1942.

ERNEST KANZLER,
Director General for Operations.

[F. R. Doc. 42-12942; Filed, December 7, 1942; 11:06 a. m.]

PART 3138—FOUNTAIN PENS, MECHANICAL PENCILS, WOOD CASED PENCILS, PEN NIBS, AND PEN HOLDERS

[General Limitation Order L-227]

The fulfillment of requirements for the defense of the United States has created a shortage in the supply of iron and steel and other materials for defense, for private account and for export; and the following order is deemed necessary and appropriate in the public interest and to promote the national defense:

§ 3138.1 *General Limitation Order L-227*—(a) *Definitions.* For the purposes of this order:

(1) "Fountain pen" means any writing device (including the pen nib) containing a reservoir of writing fluid in excess of that retained by capillary attraction on the surface of the pen nib thereof.

(2) "Mechanical pencil" means any writing instrument containing a movable core of lead or other marking material encased in a housing of any material whatsoever and including all types of automatic or mechanical pencils.

(3) "Wood cased pencil" means any writing instrument containing a nonmovable core of lead or other marking material, encased in a sheath of wood.

(4) "Pen nib" means any removable writing point designed to deposit writing fluid upon a writing surface.

(5) "Pen holder" means any device designed to hold a pen nib in position for writing, except fountain pens.

(6) "Manufacturer" means any individual, partnership, association, business trust, corporation, governmental corporation or agency, or any organized group of persons whether incorporated or not, who manufactures or assembles any fountain pens, mechanical pencils, wood cased pencils, pen nibs or pen holders, or who manufactures or assembles any part made specifically for incorporation into such products.

(7) "Part" means any part made specifically for incorporation into a fountain pen, mechanical pencil, wood cased pencil, pen nib or pen holder, except repair parts.

(8) "Repair part" means any part made specifically for incorporation into fountain pens, mechanical pencils, wood cased pencils, pen nibs or pen holders, which is not produced for or used in a new fountain pen, mechanical pencil, wood cased pencil, pen nib or pen holder.

(9) "Finishing material" means any material used as a protective coating on wood cased pencils or pen holders containing cellulose derivatives, synthetic resins, or plasticizers.

(b) *Restrictions upon production of fountain pens.* (1) On and after December 7, 1942, no manufacturer shall process, fabricate, work on or assemble any iron and steel, copper, copper base alloys, crude rubber or reclaimed rubber to be used in the production of fountain pens, nor shall any manufacturer process, fabricate, work on or assemble any stainless steel for pen nibs, or assemble any stainless steel pen nibs in fountain pens, except:

(i) Low carbon steel for functional parts of fountain pens other than pen nibs,

(ii) Crude or reclaimed rubber consisting of fountain pen semiprocessed or finished parts contained in his inventory prior to December 7, 1942,

(iii) Reclaimed rubber as permitted pursuant to Supplementary Order M-15-b, as amended from time to time,

(iv) Copper contained in 14 kt. gold pen nibs, and

(v) Stainless steel pen nibs which were contained in his inventory in completely fabricated form prior to December 7, 1942, may be assembled in fountain pens up to and including December 31, 1942.

(2) During the period beginning December 7, 1942, and ending December 31, 1942, inclusive, no manufacturer shall produce more parts or repair parts for fountain pens than the following percentages of such parts or repair parts produced by him during 1941:

(i) Parts for fountain pens, 7%.

(ii) Repair parts for fountain pens, 10%.

(3) During the period beginning December 7, 1942, and ending December 31, 1942, inclusive, no manufacturer shall produce more fountain pens than:

(i) 5% of the number of steel pen nib fountain pens produced by him during 1941, plus

(ii) 7% of the number of gold pen nib fountain pens produced by him during 1941.

(4) During the period of three months beginning January 1, 1943, and during each three months period thereafter, no manufacturer shall produce more parts or repair parts for fountain pens than the following percentages of such parts or repair parts produced by him during 1941:

(i) Parts for fountain pens, 12½%.

(ii) Repair parts for fountain pens, 30%.

(5) During the period of three months, beginning January 1, 1943, and during each three months period thereafter no manufacturer shall produce more fountain pens than:

(i) 8¾% of the number of steel pen nib fountain pens produced by him during 1941, plus

(ii) 12½% of the number of gold pen nib fountain pens produced by him during 1941.

(c) *Restrictions upon production of mechanical pencils.* (1) On and after December 7, 1942, no manufacturer shall process, fabricate, work on or assemble any iron and steel, copper, copper base alloys, crude rubber or reclaimed rubber for the production of mechanical pencils, except low carbon steel for functional parts, provided that no more than 8 pounds of such low carbon steel shall be contained in each group of 1,000 mechanical pencils produced by him on and after February 1, 1943.

(2) During the period beginning December 7, 1942, and ending December 31, 1942, inclusive, no manufacturer shall produce more parts or repair parts for mechanical pencils, or more mechanical pencils than the following percentages of such parts or repair parts for mechanical pencils, or mechanical pencils produced by him during 1941:

(i) Parts for mechanical pencils, 6%.

(ii) Repair parts for mechanical pencils, 10%.

(iii) Mechanical pencils, 6%.

(3) During the period of three months beginning January 1, 1943, and during each three months period thereafter, no manufacturer shall produce more parts or repair parts for mechanical pencils, or more mechanical pencils, than the following percentages of such parts or repair parts for mechanical pencils, or mechanical pencils, produced by him during 1941:

(i) Parts for mechanical pencils, 11¾%.

(ii) Repair parts for mechanical pencils, 30%.

(iii) Mechanical pencils, 11¾%.

(d) *Restrictions on production of wood cased pencils.* (1) On and after

December 7, 1942, no manufacturer shall process, fabricate, work on or assemble any iron and steel, copper, copper base alloys, crude rubber or reclaimed rubber for the production of wood cased pencils, nor shall any manufacturer process, fabricate, work on or assemble any wood cased pencils containing any iron and steel, copper, copper base alloys, crude rubber or reclaimed rubber.

(2) During the period beginning December 7, 1942, and ending December 31, 1942, inclusive, no manufacturer of wood cased pencils shall produce more of such wood cased pencils than 11% of the number of such wood cased pencils produced by him during 1941.

(3) During the period of three months, beginning January 1, 1943, and during each three months period thereafter, no manufacturer of wood cased pencils shall produce more of such wood cased pencils than 22% of the number of such wood cased pencils produced by him during 1941.

(4) On and after December 7, 1942, no manufacturer shall use in connection with the manufacture of wood cased pencils more finishing material in the aggregate than an amount equal to the ratio of 1 gallon of finishing material per hundred gross of wood cased pencils produced by him.

(e) *Restrictions on production of pen holders and pen nibs.* (1) On and after December 7, 1942, no manufacturer shall process, fabricate, work on or assemble any iron and steel, copper, copper base alloys, crude rubber or reclaimed rubber for the production of pen holders, nor shall any manufacturer process, fabricate, work on or assemble any pen holders containing any iron and steel, copper, copper base alloys, crude rubber or reclaimed rubber.

(2) On and after December 7, 1942, no manufacturer shall use in connection with the manufacture of pen holders more finishing material in the aggregate than an amount equal to the ratio of 1 gallon of finishing material per hundred gross of pen holders produced by him.

(3) During the period beginning December 7, 1942, and ending December 31, 1942, inclusive, no manufacturer of pen holders shall produce more of such pen holders than 10% of the number of such pen holders produced by him during 1941.

(4) During the period of three months, beginning January 1, 1943, and during each three months period thereafter, no manufacturer of pen holders shall produce more of such pen holders than 18¾% of the number of such pen holders produced by him during 1941.

(5) During the period beginning December 7, 1942, and ending December 31, 1942, inclusive, no manufacturer of pen nibs shall produce more of such pen nibs than 23% of the number of such pen nibs produced by him during 1941.

(6) During the period of three months, beginning January 1, 1943, and during each three months period thereafter, no manufacturer of pen nibs shall produce more of such pen nibs than 46¼% of the number of such pen nibs produced by him during 1941.

(f) *Restrictions upon production of novelty fountain pens, mechanical pencils, wood cased pencils and pen holders.* On and after December 7, 1942, no manufacturer shall process, fabricate, work on or assemble any fountain pens, mechanical pencils, wood cased pencils or pen holders, designed or intended to be used as a novelty or to be distributed free or at a nominal consideration for advertising, exploitation or similar purposes.

(g) *Restrictions on plating.* On and after December 31, 1942, no manufacturer shall use in the production of fountain pens, mechanical pencils, wood cased pencils, and pen holders any plating, coating or other metal finish containing any zinc, tin, cadmium, copper or nickel.

(h) *Inconsistent orders.* This order supersedes, as of December 7, 1942, Limitation Order L-113 and all amendments thereto and appeals granted thereunder.

(i) *Reports.* (1) Every manufacturer affected by this order shall execute and file with the War Production Board such reports and questionnaires as said Board shall from time to time request.

(2) Every manufacturer affected by this order shall execute and file with the War Production Board, Washington, D. C., Ref.: L-227, on or before the 10th day following the close of each calendar month, Form PD-655.

(3) Every manufacturer affected by this order shall execute and file with the War Production Board, Washington, D. C., Ref.: L-227, on or before December 15, 1942, Form PD-721.

(j) *Records.* All persons affected by this order shall keep and preserve for not less than two years accurate and complete records concerning inventories, production, and sales.

(k) *Audit and inspection.* All records required to be kept by this order shall, upon request, be submitted to audit and inspection by duly authorized representatives of the War Production Board.

(l) *Avoidance of excessive inventories.* No manufacturer of fountain pens, mechanical pencils, wood cased pencils, pen nibs, and pen holders shall accumulate for use in the manufacture of such fountain pens, mechanical pencils, wood cased pencils, pen nibs, and pen holders, inventories of raw materials, semi-processed materials, or finished parts in quantities in excess of the minimum amount necessary to maintain production at the rates permitted by this order

(m) *Violations.* Any person who wilfully violates any provision of this order, or who, in connection with this order, wilfully conceals a material fact or furnishes false information to any department or agency of the United States, is guilty of a crime, and upon conviction may be punished by fine or imprisonment. In addition, any such person may be prohibited from making or obtaining further deliveries of, or from processing or using, material under priority control and may be deprived of priorities assistance.

(n) *Appeals.* Any appeal from the provisions of this order should be made on Form PD-500, addressed to the War Production Board, Consumers' Durable Goods Division, Ref.: L-227.

(o) *Applicability of other orders.* In so far as any other order heretofore or hereafter issued by the Director of Priorities, the Director of Industry Operations or the Director General for Operations, limits the use of any material in the production of fountain pens, mechanical pencils, wood cased pencils, pen nibs, and pen holders to a greater extent than the limits imposed by this order, the restrictions in such other order shall govern unless otherwise specified therein.

(p) *Applicability of priorities regulations.* This order and all transactions affected thereby are subject to all applicable provisions of the priorities regulations of the War Production Board, as amended from time to time.

(q) *Communications.* All reports required to be filed hereunder and all communications concerning this order shall, unless otherwise directed, be addressed to the War Production Board, Consumers' Durable Goods Division, Washington, D. C., Ref.: L-227.

(P.D. Reg. 1, as amended, 6 F.R. 6680; W.P.B. Reg. 1, 7 F.R. 561; E.O. 9024, 7 F.R. 329; E.O. 9040, 7 F.R. 527; E.O. 9125, 7 F.R. 2719; sec. 2 (a), Pub. Law 671, 76th Cong., as amended by Pub. Laws 89 and 507, 77th Cong.)

Issued this 7th day of December 1942.

ERNEST KANZLER,
Director General for Operations.

[F. R. Doc. 42-12343; Filed, December 7, 1942; 11:06 a. m.]

Chapter XI—Office of Price Administration

PART 1358—TOBACCO

[MPR 283]

BURLEY TOBACCO—TYPE NO. 31

In the judgment of the Price Administrator, it is necessary and proper to establish maximum prices for sales of Burley (Type No. 31) Tobacco by a specific maximum price regulation.

A statement of the considerations involved in the issuance of this regulation has been issued simultaneously herewith and filed with the Division of the Federal Register.*

In the judgment of the Price Administrator, the maximum prices established by this Maximum Price Regulation No. 283 are and will be generally fair and equitable and will effectuate the purposes of the Emergency Price Control Act of 1942, as amended, and Executive Order No. 9250. So far as practical, the Price Administrator has advised and consulted with members of the industry which will be affected by this Regulation.

Therefore, under the authority vested in the Price Administrator by the Emergency Price Control Act of 1942, as amended, and Executive Order No. 9250 and in accordance with Revised Procedural Regulation No. 1 [7 F.R. 8961] issued by the Office of Price Administration, Maximum Price Regulation No. 283 is hereby issued.

Sec.
1358.151 Prohibition of purchases of Burley (Type No. 31) Tobacco above maximum prices.
1358.152 Less than maximum prices.
1358.153 Export sales.
1358.154 Petitions for amendment.
1358.155 Evasion.
1358.156 Enforcement.
1358.157 Records and reports.
1358.158 Definitions.
1358.159 Geographical applicability.
1358.160 Effective date.
1359.161 Appendix A; maximum prices for Burley (Type No. 31) Tobacco.

AUTHORITY: §§ 1358.151 to 1358.161, inclusive, issued under Pub. Laws 421 and 729, 77th Cong.; E.O. 9250, 7 F.R. 7871.

§ 1358.151 *Prohibition of purchases of Burley (Type No. 31) Tobacco above maximum prices.* On and after December 4, 1942, regardless of any contract, agreement, lease or other obligation:

(a) No person shall buy or receive any Burley (Type No. 31) Tobacco on the loose-leaf markets at prices higher than the maximum price for the grade set forth in Appendix A, § 1358.161, of this Maximum Price Regulation No. 283.

(b) No person shall agree, offer, solicit or attempt to do any of the foregoing.

§ 1358.152 *Less than maximum prices.* Lower prices than those established by this Maximum Price Regulation No. 283 may be paid or offered.

§ 1358.153 *Export sales.* The maximum prices at which a person may export Burley (Type No. 31) Tobacco shall be determined in accordance with the provisions of the Revised Maximum Export Regulation [2] issued by the Office of Price Administration.

§ 1358.154 *Petitions for amendment.* Persons seeking any modification of this Maximum Price Regulation No. 283 or exceptions not provided for therein, may file petitions for amendment in accordance with the provisions of Revised Procedural Regulation No. 1 issued by the Office of Price Administration.

§ 1358.155 *Evasion.* (a) The price limitations set forth in this Maximum Price Regulation No. 283 shall not be evaded, whether by direct or indirect methods, in connection with an offer, solicitation, agreement, sale, delivery, purchase or receipt of, or relating to Burley (Type No. 31) Tobacco, alone or in conjunction with any other commodity or by way of commission, service, transportation or other charge or discount, premium or other privilege or other trade understanding or otherwise.

(b) Specifically, but not exclusively, the following practice is prohibited:

(1) Any resale of resorted Burley (Type No. 31) Tobacco without being regraded by the Agricultural Marketing Administration of the United States Department of Agriculture.

§ 1358.156 *Enforcement.* (a) Persons violating any provisions of this Maximum Price Regulation No. 283 are subject to the criminal penalties, civil enforcement actions and suits for treble damages provided for by the Emergency Price Control Act of 1942.

(b) Persons who have any evidence of any violation of this Maximum Price Regulation No. 283 or any price schedule, regulation or order, issued by the Office of Price Administration, or any acts or practices which constitute such a violation, are urged to communicate with the nearest district, state or regional offices of the Office of Price Administration, or its principal office in Washington, D. C.

§ 1358.157 *Records and reports.* (a) Every person purchasing Burley (Type No. 31) Tobacco shall keep and make available for examination by the Office of Price Administration, for so long as the Emergency Price Control Act of 1942 remains in effect, records of the same kind as he customarily kept relating to the prices which he paid for such Burley (Type No. 31) Tobacco, after the effective date of this Maximum Price Regulation No. 283.

(b) Every purchaser of Burley (Type No. 31) Tobacco shall file with the Office of Price Administration in Washington, D. C., for each week of the buying season for Burley (Type No. 31) Tobacco during which such purchaser bought any grade of such tobacco, a statement setting forth the total number of pounds of each grade bought and the total amount paid for the pounds of each grade bought. The report submitted for any week shall be filed not later than Saturday of the following week.

(c) Every warehouseman in whose warehouse Burley (Type No. 31) Tobacco is sold, shall keep and make available for examination by the Office of Price Administration for so long as the Emergency Price Control Act of 1942 remains in effect, records showing all sales of Burley (Type No. 31) Tobacco, the grade and the amount of such grade of each sale, the date of each sale and the price paid and the name of the purchaser of such tobacco.

§ 1358.158 *Definitions.* (a) When used in this Maximum Price Regulation No. 283 the term:

(1) "Burley (Type No. 31) Tobacco" means United States Type No. 31 as specified in the Regulatory Announcement No. 18 of the Bureau of Agricultural Economics of the United States Department of Agriculture.

(2) "Grade" means the basic standard grades of Burley (Type No. 31) Tobacco established by the Agricultural Marketing Administration of the United States Department of Agriculture and set out in Appendix A, § 1358.161 (a) of this Maximum Price Regulation No. 283.

(3) "Person" includes individual, corporation, partnership, association or any other organized group of persons or legal successor or representative of any of the foregoing, and includes the United States or any agency thereof or any other government, or any of its political subdivisions or any agency of any of the foregoing.

(4) "Weighted average ceiling price" means the figure obtained by:

(i) Multiplying the total number of pounds of each grade bought during the specified period by the ceiling price for such grade as set forth in Appendix A, § 1358.161 (a),

(ii) Adding together the resulting figures obtained in (i), and

(iii) Dividing the sum obtained in (ii) by the total of number of pounds of all grades bought during the specified period.

(5) "Weighted average purchase price" means the figure obtained by:

(i) Multiplying the number of pounds bought in each transaction during the specified period by the purchase price per pound paid in the particular transaction,

(ii) Adding together the resulting figures obtained in (i), and

(iii) Dividing the sum obtained in (ii) by the total number of pounds of all grades bought during the specified period.

(b) Unless the context otherwise requires, the definitions set forth in section 302 of the Emergency Price Control Act of 1942 shall apply to other terms used herein.

§ 1358.159 *Geographical applicability.* The provisions of this Maximum Price Regulation No. 283 shall be applicable to the forty-eight states of the United States.

§ 1358.160 *Effective date.* This Maximum Price Regulation No. 283 (§§ 1358.151 to 1358.161) shall become effective December 4, 1942.

§ 1358.161 *Appendix A; maximum prices for Burley (Type No. 31) Tobacco.* (a) The maximum prices for the various grades of Burley (Type No. 31) To-

*Copies may be obtained from the Office of Price Administration.

[2] 7 F.R. 5059, 7242, 8829, 9000.

bacco, except as provided in paragraph (b) of this section, shall be as follows:

Grades:	*Maximum prices per cwt. on warehouse floor*
A1L	$59.00
A2L	57.00
A1F	57.00
A2F	55.00
A1R	54.00
A2R	49.00
B1F	54.00
B2F	53.00
B3F	49.00
B4F	43.00
B5F	34.00
B1R	45.00
B2R	43.00
B3R	37.00
B4R	29.50
B5R	23.00
B3D	27.50
B4D	21.50
B5D	16.50
B3G	29.50
B4G	22.50
B5G	17.00
T3F	38.00
T4F	30.00
T5F	22.00
T3R	26.00
T4R	20.00
T5R	14.75
T3D	20.00
T4D	15.00
T5D	12.00
T3G	17.00
T4G	15.00
T5G	11.50
C1L	57.00
C2L	55.00
C3L	54.00
C4L	53.00
C5L	48.00
C1F	55.00
C2F	55.00
C3F	54.00
C4F	52.00
C5F	46.00
C3R	52.00
C4R	46.00
C5R	39.00
C3G	37.00
C4G	32.00
C5G	25.00
X1L	54.00
X2L	54.00
X3L	53.00
X4L	49.00
X5L	40.00
X1F	55.00
X2F	54.00
X3F	53.00
X4F	48.00
X5F	39.00
X3R	50.00
X4R	44.00
X5R	34.00
X3G	39.00
X4G	32.00
X5G	22.50
NL	25.00
NGR	11.00

(b) Any grade of Burley (Type No. 31) Tobacco may be purchased at a price in excess of the maximum price established for that grade in paragraph (a) of this section: *Provided*, That the weighted average purchase price for the grades bought in any one week by any purchaser does not exceed the weighted average ceiling price for such purchases for the same week.

(c) Every warehouseman or his representative, before any sale of Burley (Type No. 31) Tobacco, shall (1) designate on the basket tag of such tobacco the maximum price specified in paragraph (a) of this section for the grade shown on such tag, and (2) announce, immediately preceding the sale of such basket and in the presence of the assembled buyers, the grade and maximum price for the Burley (Type No. 31) Tobacco to be sold.

(d) Every warehouseman or his representative, after any sale, shall indicate on the invoice or billing to the purchaser the Government grade and the purchase price for each grade bought by the buyer as set out in paragraph (a) of this section.

Issued this 4th day of December 1942.

LEON HENDERSON,
Administrator.

Approved:

PAUL H. APPLEBY,
Acting Secretary of Agriculture.

[F. R. Doc. 42-12905; Filed, December 4, 1942; 4:50 p. m.]

PART 1388—DEFENSE-RENTAL AREAS

[Maximum Rent Regulation 57]

HOUSING ACCOMMODATIONS OTHER THAN HOTELS AND ROOMING HOUSES

Correction

In § 1388.581 (a) (54) appearing on page 9959 in the issue for Tuesday, December 1, 1942, "North Carolina" should read "South Carolina."

PART 1418—TERRITORIES AND POSSESSIONS

[MPR 183,[1] Amendment 12]

PUERTO RICO

A statement of considerations involved in the issuance of this amendment has been issued simultaneously herewith and has been filed with the Division of the Federal Register.*

Subparagraph (13) is added to paragraph (a) of § 1418.1 and paragraphs (u), (v) and (w) are added to § 1418.14.

§ 1418.1 *Maximum prices.* (a) Maximum prices are established as follows: * * *

(13) On and after December 9, 1942, regardless of any contract, agreement, lease or other obligation, or of any price regulation heretofore issued, no person shall sell or deliver oleomargarine and certain processed fruits and vegetables in the Territory of Puerto Rico at prices higher than the maximum prices set forth in § 1418.14 (u), Table XIX; and (v), Table XX; and no person shall offer, solicit, or attempt to do any of the foregoing.

*Copies may be obtained from the Office of Price Administration.

[1] 7 F.R. 5620, 6744, 6959, 7454, 7843, 7945, 8558, 8833, 8946, 9341.

§ 1418.14 *Tables of maximum prices.* * * *

(u) *Table XIX—Specific maximum prices for oleomargarine*

	Sales to wholesalers (price per pound)	Sales to retailers (price per pound)	Sales at retail (price per pound)
Oleomargarine	$.18	$1.06	$.21

For sales of different quantities the maximum price shall be proportionately computed.

(v) *Table XX—Specific maximum prices for certain processed vegetables and fruits*

	Sales to wholesalers	Sales to retailers	Sales at retail
	Case 24/No. 2 cans	*Case 24/No. 2 cans*	*Price per No. 2 can*
Carrots	$2.10	$2.40	$0.13
Corn	2.65	3.05	.16
Peas	3.00	3.45	.18
Tomatoes	2.40	2.75	.15
	Case 48/10½ oz. cans	*Case 48/10½ oz. cans*	*Price per 10½ oz. can*
Tomato soup	$2.65	$3.00	$0.08
Vegetable soup	2.65	3.00	.08
	Case 72/3 oz. cans	*Case 72/3 oz. cans*	*Price per 3 oz. can*
Tomato sauce	$3.00	$3.60	$0.07

For sales of different quantities the maximum price shall be proportionately computed.

(w) Every person selling any of the commodities listed in paragraphs (u) and (v) of this section, to a retailer on and after December 9, 1942, before or at the time of his first delivery to each purchaser shall supply the purchaser with a statement of the maximum retail prices set forth above for the commodity or commodities delivered.

§ 1418.13a *Effective dates of amendments.* * * *

(1) Amendment No. 12 (§§ 1418.1 (13), 1418.14 (u), (v) and (w)) to Maximum Price Regulation No. 183 shall become effective December 9th, 1942.

(Pub. Laws 421 and 729, 77th Cong.; E.O. 9250, 7 F.R. 7871)

Issued this 4th day of December 1942.

LEON HENDERSON,
Administrator.

[F. R. Doc. 42-12904; Filed, December 4, 1942; 4:50 p. m.]

PART 1340—FUEL

[MPR 189,[1] Amendment 3]

BITUMINOUS COAL SOLD FOR DIRECT USE AS BUNKER FUEL

A statement of the considerations involved in the issuance of this amendment, issued simultaneously herewith, has been filed with the Division of the Federal Register.*

[1] 7 F.R. 5331, 6634, 8939.

A new subparagraph (2) is added to § 1340.407 (a), as set forth below:

§ 1340.307 *Petitions for amendment and applications for adjustment.* (a) The Office of Price Administration may adjust any maximum price established under this regulation in the following cases: * * *

(2) In the case of any supplier of bunker fuel who is reselling the same and who shows that his maximum price is too low, in relation to the purchase cost of such fuel resold by him, to permit the continuance of the sale of bunker fuel, and such discontinuance will impair the ability of bunker fuel consumers to obtain supplies thereof which aid in the war program. An adjustment granted pursuant to this subparagraph will generally increase the applicable maximum price by the amount of increase in said purchase cost.

Applications for adjustment shall be filed in accordance with Revised Procedural Regulation No. 1.

§ 1340.314a *Effective dates of amendments.* * * *

(c) Amendment No. 3 (§ 1340.307 (a) (2)) to Maximum Price Regulation No. 189 shall become effective December 5, 1942.

(Pub. Laws 421 and 729, 77th Cong.; E.O. 9250, 7 F.R. 7871)

Issued this 5th day of December 1942.

LEON HENDERSON,
Administrator.

[F. R. Doc 42-12936; Filed, December 5, 1942; 12:06 p. m.]

PART 1341—CANNED AND PRESERVED FOODS

[MPR 226, Amendment 3]

FRUIT PRESERVES, JAMS AND JELLIES

A statement of the considerations involved in the issuance of Amendment No. 3 to Maximum Price Regulation No. 226 has been issued and filed with the Division of the Federal Register.*

Two new paragraphs are added to § 1341.302 and paragraph (a) of § 1341.309a is amended as set forth below.

§ 1341.302 *Packer's maximum prices for fruit preserves, jams and jellies.* * * *

(e) *New container types and sizes.* The maximum price per dozen or other unit for any container type or size which the packer did not sell during the 1941 base period shall be calculated as follows. He shall:

(1) *Select the base container type and size.* (i) If the packer sold the same kind, flavor, brand and container size, but only in other container types during the 1941 base period, he shall first select from that kind, flavor, brand and container size the most closely comparable container type for which he is able to calculate a maximum price under this section (even though he no longer sells that container type).

(ii) If the packer sold the same kind, flavor, brand and container type, but only in other sizes, during the 1941 base period, he shall first select from that kind, flavor, brand and container type the nearest size for which he is able to calculate a maximum price under this section and which is one-half or less larger or, if there is no such size, one-half or less smaller (even though he no longer sells that size).

(iii) If the packer sold the same kind, flavor and brand, but only in other sizes and container types, during the 1941 base period, he shall first select from that kind, flavor, and brand the most closely comparable container type for which he is able to calculate a maximum price under this section (even though he no longer sells that container type), and from that container type he shall select the nearest size which is one-half or less larger or, if there is no such size, one-half or less smaller (even though he no longer sells that size). If there is no smaller size, he shall go to the next most closely comparable container type and proceed in the same manner to find a base container type and size.

(2) *Deduct the container cost.* Taking the maximum price per dozen or other unit which he has already calculated for the selected size and container type, the packer shall then subtract the direct cost per dozen or other unit of the container. "Direct cost of the container" means delivered costs of the container, label, cap, and outgoing shipping carton, but it does not include costs of filling, closing, labeling or packing.

(3) *Adjust for the difference in contents.* The figure obtained by this deduction shall then be adjusted by dividing it by the number of ounces in that sized container and multiplying the result by the number of ounces in the sized container being priced.

(4) *Add the new container cost.* Finally, the packer shall add to this adjusted figure the "direct cost of the container" in the size being priced.

(f) *Packers selling to consumers.* Any packer who regularly sells any item of fruit preserves, jams, or jellies to ultimate consumers other than industrial, institutional and commercial users shall calculate a maximum price for the item separately to that class of purchasers. If during the 1941 base period such a packer sold the item also to wholesalers or retailers, he shall calculate his maximum price to ultimate consumers (other than industrial, institutional and commercial users) by adding to his maximum price to such consumers under the General Maximum Price Regulation, the permitted increase which he has calculated under this regulation for his retailers or for his wholesalers (converted to retail units). If during the 1941 base period he sold the item only to ultimate consumers (other than industrial, institutional and commercial users), he shall add the permitted increase which the nearest comparable packer who sells to retailers or wholesalers has computed for his retailers or for his wholesalers (converted to retail units).

Paragraph (a) of § 1341.309a is amended by deleting the sentence, "When any packer has established a maximum price by taking the maximum price of his competitor, as provided in § 1341.303 (a), his base price shall be the base price of the competitor," and substituting the following:

If the packer has established a maximum price under paragraphs (a) to (d) of § 1341.302, but made no sales of the item during December 1941, his base price shall be his highest offering price during December 1941, but if he had no offering price, he shall report only the permitted increase which the most closely competitive packer calculated for his own wholesalers. If the packer has established a maximum price by taking the maximum price of his competitor, as provided in § 1341.303 (a), and he made no sales of the item during December 1941, his base price shall be his highest offering price during December 1941 or, if he had no offering price, the base price of the most closely competitive packer.

§ 1341.317 *Effective dates of amendments.* * * *

(d) Amendment No. 3 (§§ 1341.302 (a) (1), (e) and (f), 1341.309a (a) and 1341.317 (d)) to Maximum Price Regulation No. 226 shall become effective December 11, 1942.

(Pub. Laws 421 and 729, 77th Cong.; E.O. 9250, 7 F.R. 7871)

Issued this 5th day of December 1942.

LEON HENDERSON,
Administrator.

[F. R. Doc. 42-12922; Filed, December 5, 1942; 11:27 a. m.]

PART 1341—CANNED AND PRESERVED FOODS

[MPR 232, Amendment 2]

APPLE BUTTER

A statement of the considerations involved in the issuance of Amendment No. 2 to Maximum Price Regulation No. 232 has been issued and filed with the Division of the Federal Register.*

Two new paragraphs are added to § 1341.452 and paragraph (a) of § 1341.459a is amended as set forth below.

§ 1341.452 *Packer's maximum prices for apple butter.* * * *

(e) *New container types and sizes.* The maximum price per dozen or other unit for any container type or size which the packer did not sell during the 1941 base period shall be calculated as follows. He shall:

(1) *Select the base container type and size.* (i) If the packer sold the same kind, flavor, brand and container size, but only in other container types, during the 1941 base period, he shall first select from that kind, flavor, brand and container size the most closely comparable container type for which he is able to calculate a maximum price under this

*Copies may be obtained from the Office of Price Administration.

section (even though he no longer sells that container type).

(ii) If the packer sold the same kind, flavor, brand and container type, but only in other sizes, during the 1941 base period, he shall first select from that kind, flavor, brand and container type the nearest size for which he is able to calculate a maximum price under this section and which is one-half or less larger or, if there is no such size, one-half or less smaller (even though he no longer sells that size).

(iii) If the packer sold the same kind, flavor and brand, but only in other sizes and container types, during the 1941 base period, he shall first select from that kind, flavor, and brand the most closely comparable container type for which he is able to calculate a maximum price under this section (even though he no longer sells that container type), and from that container type he shall select the nearest size which is one-half or less larger or, if there is no such size, one-half or less smaller (even though he no longer sells that size). If there is no smaller size, he shall go to the next most closely comparable container type and proceed in the same manner to find a base container type and size.

(2) *Deduct the container cost.* Taking the maximum price per dozen or other unit which he has already calculated for the selected size and container type, the packer shall then subtract the direct cost per dozen or other unit of the container. "Direct cost of the container" means delivered costs of the container, label, cap, and outgoing shipping carton, but it does not include costs of filling, closing, labeling or packing.

(3) *Adjust for the difference in contents.* The figure obtained by this deduction shall then be adjusted by dividing it by the number of ounces in that sized container and multiplying the result by the number of ounces in the sized container being priced.

(4) *Add the new container cost.* Finally, the packer shall add to this adjusted figure the "direct cost of the container" in the size being priced.

(f) *Packers selling to consumers.* Any packer who regularly sells any item of apple butter to ultimate consumers other than industrial, institutional and commercial users shall calculate a maximum price for the item separately to that class of purchasers. If during the 1941 base period such a packer sold the item also to wholesalers or retailers, he shall calculate his maximum price to ultimate consumers (other than industrial, institutional and commercial users) by adding to his maximum price to such consumers, under the General Maximum Price Regulation, the permitted increase which he has calculated under this regulation for his retailers or for his wholesalers (converted to retail units). If during the 1941 base period he sold the item only to ultimate consumers (other than industrial, institutional and commercial users), he shall add the permitted increase which the nearest comparable packer who sells to retailers or wholesalers has computed for his retailers or for his wholesalers (converted to retail units).

Paragraph (a) of § 1341.459a is amended by deleting the sentence, "When any packer has established a maximum price by taking the maximum price of his competitor, as provided in § 1341.453(a), his base price shall be the base price of the competitor," and substituting the following:

§ 1341.459a * * *

* * * If the packer has established a maximum price under paragraphs (a) to (d) of § 1341.452, but made no sales of the item during December 1941, his base price shall be his highest offering price during December 1941, but if he had no offering price, he shall report only the permitted increase which the most closely competitive packer calculated for his own wholesalers. If the packer has established a maximum price by taking the maximum price of his competitor, as provided in § 1341.453(a), and he made no sales of the item during December 1941, his base price shall be his highest offering price during December 1941 or, if he had no offering price, the base price of the most closely competitive packer.

* * * * *

§ 1341.466 *Effective dates of amendments.* * * *

(b) Amendment No. 2 (§§ 1341.452 (e) and (f), 1341.459a, and 1341.466(b)) to Maximum Price Regulation No. 232 shall become effective December 11, 1942.

(Pub. Laws 421 and 729, 77th Cong.; E.O. 9250, 7 F.R. 7871)

Issued this 5th day of December 1942.

LEON HENDERSON,
Administrator.

[F. R. Doc. 42-12923; Filed, December 5, 1942; 11:27 a. m.]

PART 1351—FOOD AND FOOD PRODUCTS

[MPR 238, Amendment 4]

ADJUSTED AND FIXED MARK-UP REGULATIONS FOR SALES OF CERTAIN FOOD PRODUCTS AT RETAIL

A statement of the considerations involved in the issuance of this amendment has been issued simultaneously herewith and filed with the Division of the Federal Register.*

Section 1351.610 is hereby revoked in its entirety.

Section 1351.617a (d) is added to read as set forth below:

§ 1351.617a *Effective dates of amendments.* * * *

(d) This Amendment No. 4 (§§ 1351.610 and 1351.617a (d)) to Maximum Price Regulation No. 238 shall become effective December 11, 1942.

(Pub. Laws 421 and 729, 77th Cong.; E.O. 9250, 7 F.R. 7871)

*Copies may be obtained from the Office of Price Administration.

Issued this 5th day of December 1942.

LEON HENDERSON,
Administrator.

[F. R. Doc. 42-12924; Filed, December 5, 1942; 11:26 a. m.]

PART 1351—FOOD AND FOOD PRODUCTS

[MPR 279]

HOPS

A statement of the considerations involved in the issuance of this Maximum Price Regulation No. 279 has been issued simultaneously herewith and filed with the Division of the Federal Register.*

In the judgment of the Price Administrator, it is necessary and proper to establish maximum prices for certain sales of hops. So far as practicable, the Price Administrator has advised and consulted with members of the industry which will be affected by this Maximum Price Regulation No. 279.

In the judgment of the Price Administrator the maximum prices established by this Maximum Price Regulation No. 279 are, and will be, generally fair and equitable, and will effectuate the purposes of the Emergency Price Control Act of 1942, as amended.

Therefore, under the authority vested in the Price Administrator by the Emergency Price Control Act of 1942, as amended, and Executive Order No. 9250, Maximum Price Regulation No. 279 is hereby issued.

AUTHORITY: §§ 1351.1451 to 1351.1465, inclusive issued under Pub. Laws 421 and 729, 77th Cong.; E.O. 9250, 7 F.R. 7871.

§ 1351.1451 *Purpose of this regulation.* On and after the effective date of this regulation regardless of any contract, agreement or other obligation, no person to whom this regulation is applicable shall sell or deliver any hops as specified in this regulation and no person in the course of trade shall buy or receive any such hops at a price higher than the maximum prices permitted by this regulation; and no person shall agree, offer, solicit, or attempt to do any of the foregoing. Lower prices may be charged, demanded, paid or offered.

§ 1351.1452 *Maximum prices for hops grown previous to the 1942 crop.* The maximum prices for sales of hops grown previous to the 1942 crop shall be as follows:

(a) For sales of Pacific Coast regular seeded hops by growers, 38 cents per pound f. o. b. grower's farm, warehouse or place of business.

(b) For sales of Pacific Coast seedless hops by growers, 40 cents per pound f. o. b. grower's farm, warehouse or place of business.

(c) For sales of Pacific Coast regular seeded hops by grower cooperatives or grower dealers, 43 cents per pound f. o. b. farm, warehouse or place of business.

(d) For sales of Pacific Coast seedless hops by grower cooperatives or grower dealers, 45 cents per pound f. o. b. farm, warehouse or place of business.

(e) For sales of Pacific Coast regular seeded hops by a dealer, 48 cents per pound f. o. b. warehouse or place of business.

(f) For sales of Pacific Coast seedless hops by a dealer, 50 cents per pound f. o. b. warehouse or place of business.

(g) For sales of Pacific Coast regular seeded hops by a brewers supply dealer, 53 cents per pound f. o. b. warehouse or place of business.

(h) For sales of Pacific Coast seedless hops by a brewers supply dealer, 55 cents per pound f. o. b. warehouse or place of business.

§ 1351.1453 *Maximum prices for certain sales of hops of the 1942 crop.* (a) The maximum price for sales by dealers and brewers supply dealers of the 1942 crop of Pacific Coast regular seeded hops and of Pacific Coast seedless hops (to be priced separately) shall be the highest price charged by such dealer or brewers supply dealer during the period of the five days preceding December 5, 1942, f. o. b. his warehouse or place of business. If the seller had only a delivered price during said period he shall ascertain his maximum price f. o. b. his warehouse or place of business by deducting the exact transportation charge on each sale and delivery during said period and the highest resultant figure shall be his maximum price f. o. b. his warehouse or place of business.

(b) "Highest price charged during the five day period" specified in the above paragraph means the highest price which the seller charged for a sale or delivery during the five day base period to a purchaser of the same class; or if the seller made no such sale or delivery during the five day base period his highest offering price for delivery during that period to a purchaser of the same class; or if the seller made no sale or delivery or had no offering price during the five day base period to a purchaser of the same class the highest price charged during the base period to a purchaser of the same class by his most closely competitive seller during the base period.

§ 1351.1454 *Maximum delivered prices.* On all sales of hops covered by this regulation the maximum delivered price shall be the maximum f. o. b. price hereinbefore in this regulation specified plus the actual transportation cost from the seller's shipping point to the buyer's receiving point.

§ 1351.1455 *Trade practices to be maintained.* Customary allowances, discounts or other price differentials shall be maintained by every seller subject to this regulation, but the maximum prices fixed by this regulation shall not be exceeded.

§ 1351.1456 *The maximum prices at which any seller may export any hops subject to this regulation.* The maximum prices at which any seller may export any hops subject to this regulation shall be determined in accordance with the provisions of the Revised Maximum Export Price Regulation[1] or other applicable regulation hereafter issued by the Office of Price Administration.

§ 1351.1457 *Exempt sales.* This regulation shall not apply to the following:

(a) Sales of other than Pacific Coast regular seeded hops, or Pacific Coast seedless hops.

(b) Sales of Pacific Coast hops of the 1942 crop by growers, grower cooperatives or grower dealers.

§ 1351.1458 *Evasion.* The maximum prices set forth in this regulation shall not be evaded, whether by direct or indirect methods, in connection with an offer, solicitation, agreement, sale, delivery, purchase or receipt of, or relating to any hops covered by this regulation alone or in conjunction with any other commodity or by way of any commission, service, transportation or other charge or discount, premium or other privilege, or by tying agreement or other trade understanding or by changing a business practice.

§ 1351.1459 *Enforcement.* (a) Persons violating any provisions of this regulation are subject to the criminal penalties, civil enforcement actions, suits for treble damages and proceedings for suspension of licenses as provided in the Emergency Price Control Act of 1942, as amended.

(b) Persons who have evidence of any violation of this regulation or of any other price regulation, schedule or order issued by the Office of Price Administration or of any acts or practices which constitute such a violation are urged to communicate with the nearest district, state, field or regional office of the Office of Price Administration or its principal office in Washington, D. C.

§ 1351.1460 *Petitions for amendment.* Persons seeking modifications of any provisions of this regulation or an adjustment or exception not provided for herein, may file petitions for amendment in accordance with the provisions of Revised Procedural Regulation No. 1 issued by the Office of Price Administration.

§ 1351.1461 *Adjustable pricing.* Any person may offer or agree to adjust or fix prices to and at prices not in excess of the maximum prices in effect at the time of delivery. In appropriate situations where a petition for amendment requires extended consideration, the Price Administrator may, upon application, grant permission to agree to adjust prices upon deliveries made during the pendency of the petition in accordance with the disposition of the petition.

§ 1351.1462 *Records.* Every seller shall keep a record of every sale of hops subject to this regulation, for so long as the Emergency Price Control Act of 1942 as amended remains in effect, showing the date of the sale, the quantity sold, whether sold f. o. b. or delivered, the maximum price and the name and address of the purchaser. Said records shall be available for examination by the Office of Price Administration at any time and upon request every such seller shall submit said records to the Office of Price Administration or keep additional records as the Office of Price Administration may from time to time direct.

§ 1351.1463 *Definitions.* (a) "Grower" means a person who produces hops.

(b) "Grower-dealer" means a person who produces hops and sells them to a brewers supply dealer or to the ultimate consumer.

(c) "Grower cooperative" means a non-profit organization acting on behalf of its grower members and selling hops produced by such members to a brewers supply dealer or to the ultimate consumer.

(d) "Dealer" means a person other than a brewers supply dealer who buys hops from a grower for resale.

(e) "Brewers supply dealer" means a person who resells to a brewer and is engaged in the business of selling diverse equipment, supplies and/or services to brewers and whose sales of hops to brewers do not exceed 10 per cent of his total sales of all commodities and/or services to brewers.

(f) Unless the context indicates otherwise, the definitions set forth in section 302 of the Emergency Price Control Act of 1942, as amended, and in the General Maximum Price Regulation issued by the Office of Price Administration shall be applicable to like or similar terms used in this regulation.

§ 1351.1464 *Applicability.* The provisions of this regulation shall be applicable within the continental limits of the United States excluding Alaska.

§ 1351.1465 *Effective date.* This regulation shall become effective December 9, 1942.

Issued this 5th day of December 1942.

LEON HENDERSON,
Administrator.

Approved:

GROVER B. HILL,
Acting Secretary of Agriculture.

[F. R. Doc. 42-12925; Filed, December 5, 1942; 11:26 a. m.]

PART 1360—MOTOR VEHICLES AND MOTOR VEHICLE EQUIPMENT

[Rationing Order 2A[1] Amendment 20]

NEW PASSENGER AUTOMOBILE RATIONING REGULATIONS

A rationale for the issuance of this amendment has been issued simultaneously herewith and has been filed with the Division of the Federal Register.*

New paragraphs (o), (p), (q) and (r) are added to § 1360.310; new paragraphs (c), (d) and (e) are added to §1360.331; the undesignated center headnote, "Restriction of Transfers", §1360.332 and §1360.361 (c) are amended to read as set forth below:

[1] 7 F.R. 5059, 7242, 8829, 9000.

*Copies may be obtained from the Office of Price Administration.

[1] 7 F.R. 1542, 1647, 1756, 2108, 2242, 2305, 2903, 3097, 3482, 4343, 5484, 6049, 6082, 6424, 6601, 6775, 6964, 7149, 8808, 8895, 9316.

Definitions

§ 1360.310 *Definitions.* * * *

(o) "Alter" means:

(1) To change, modify, dismantle, junk, transform, rebuild, or reconstruct a new passenger automobile; or

(2) To convert a new passenger automobile into any other model or type of conveyance; or

(3) To remove from a new passenger automobile any standard equipment or to remove any other part or equipment the removal of which would impair the operating efficiency of such new passenger automobile.

(p) "Standard equipment" means equipment stated to be standard equipment by the manufacturer as of October 15, 1941.

(q) "Automobile body builder" means any person engaged in the business of rebuilding or converting passenger automobiles.

(r) "Stock car" means any new passenger automobile which is held for purposes of alteration or sale or other transfer by a dealer, distributor, manufacturer, automobile body builder, or a person engaged in the business of insuring or financing passenger automobiles.

Prohibitions

§ 1360.331 *Prohibitions.* * * *

(c) No person shall alter a pool car.

(d) No person shall alter any 1942 non-pool stock car except as follows:

(1) No four-door sedan, two-door sedan, or two or three passenger coupe, hard top, 1942 non-pool stock car may be altered unless such alteration is authorized by the Office of Price Administration, Washington, D. C.

(i) Any owner of an automobile described in subparagraph (1) may make application to the Office of Price Administration, Washington, D. C., for authorization to alter such automobile. Application shall be made in writing, over the signature of the owner or his duly authorized agent, giving the make, body type, serial number and engine number of the automobile, the details of the proposed alteration, and the purpose for which the altered vehicle is to be used.

(ii) The Office of Price Administration, Washington, D. C., if it determines, on the basis of the application and such other evidence as it may require, that the proposed alteration will result in a more economical use of the automobile and will otherwise be in the public interest, may issue an authorization permitting the owner to alter the new passenger automobile described in the application.

(2) Any non-pool stock car other than a four-door sedan, two-door sedan or two or three passenger coupe, hard top, 1942 model may be altered without authorization provided that it is converted into any other model or type of conveyance.

(3) Any part or equipment may be removed from any automobile altered pursuant to subparagraphs (1) or (2) of this paragraph (d) if such part is not essential to the operation of the altered vehicle.

(4) Any part or equipment may be removed from any stock car:

(i) Pursuant to any order, authorization or regulation issued by the War Production Board or the Office of Price Administration;

(ii) In the course of dismantling or junking a stock car for the purpose of scrap or salvage of its parts if, by reason of fire, collision, use or otherwise, it is in such condition that it is impracticable to repair or condition it as a passenger automobile; *Provided, however,* That any person who dismantles or junks a stock car shall notify the Office of Price Administration, Inventory Unit, thereof in accordance with paragraph (e) of this section;

(iii) In the course of repairing such stock car.

(e) Any person who alters a stock car pursuant to paragraph (d) (1) and (2) of this section shall report such alteration within five days thereafter to the Office of Price Administration, Inventory Unit, New York, New York. Such report shall be made in writing over the signature of the owner or his duly authorized agent, specifying the make, body type, serial number and engine number of the automobile, the model or type of conveyance into which it has been altered and the use which is or will be made of the vehicle.

§ 1360.332 *Exemptions.* (a) The prohibitions upon transfers of new passenger automobiles provided by § 1360.331 (a) shall not apply to transfers pursuant to Rationing Order No. 2.[2]

(b) The prohibitions of § 1360.331 shall not apply:

(1) To transfers to any of the following persons pursuant to Government Exemption Permits issued by the Director of Industry Operations of the War Production Board, or to alterations by or on their behalf, of automobiles acquired by them:

(i) The United States Army, Navy, Coast Guard or Marine Corps, the United States Maritime Commission, the Panama Canal, the Coast and Geodetic Survey, the Civil Aeronautics Authority, the National Advisory Committee for Aeronautics, the Office of Scientific Research and Development, the Office of Lend-Lease Administration.

(ii) Persons acquiring new passenger automobiles for export to and consumption or use in any foreign country under an export license issued by the Export Control Branch, Office of Exports, Board of Economic Warfare.

Transfers Without Certificates

§ 1360.361 *Persons eligible to acquire for use.* * * *

(c) Dealers, insurers, junk dealers or salvage companies acquiring any new passenger automobile which has been substantially destroyed by collision, fire, use or otherwise; *Provided, however,* That such automobile shall be used only for scrap or salvage of its parts.

Effective Dates

§ 1360.442 *Effective dates of amendments.* * * *

(t) Amendment No. 20 (§§ 1360.310, 1360.331, 1360.332, 1360.361) to Rationing Order No. 2A shall become effective December 11, 1942.

(Pub. Law 421, 77th Cong., W.P.B. Dir. No. 1, Supp. Dir. No. 1A, 7 F.R. 562, 693, 1493)

Issued this 5th day of December 1942.

LEON HENDERSON,
Administrator.

[F. R. Doc. 42-12326; Filed, December 5, 1942; 11:28 a. m.]

[2] 7 F.R. 667, 936, 1131, 1009.

PART 1367—FERTILIZERS

[MPR 135,[1] Amendment 4]

MIXED FERTILIZER, SUPERPHOSPHATE AND POTASH

A statement of considerations involved in the issuance of this amendment, issued simultaneously herewith, has been filed with the Division of the Federal Register.*

A new § 1367.33a is added as set forth below:

§ 1367.33a *Adjustable pricing without petition.* Every manufacturer of mixed fertilizer, superphosphate and potash may, without petition or application to the Office of Price Administration for the period of sixty days, next ensuing, or until the effective date of an amendment, hereafter issued, to the maximum price provisions of this Maximum Price Regulation 135, whichever may be the shorter time, sell and deliver mixed fertilizer, superphosphate and potash, and the buyer may buy and accept delivery at the manufacturer's maximum price heretofore established under this Maximum Price Regulation 135, upon the agreement in writing, entered into between the manufacturer and the buyer, that the buyer shall pay to the manufacturer, within a reasonable time to be fixed by the agreement, such price, or increase in price, as may be established or provided for by such amendment as may hereafter be issued, and that the manufacturer shall, within the equivalent time, refund to the buyer any increase paid by the buyer over and above the established maximum price, in the event that such amendment does not establish or provide for such increase.

§ 1367.41 *Effective dates of amendments.* * * *

(d) Amendment No. 4 (§ 1367.33a) a Maximum Price Regulation 135 shall become effective December 5, 1942.

Issued this 5th day of December 1942.

LEON HENDERSON,
Administrator.

[F. R. Doc. 42-12337; Filed, December 5, 1942; 12:06 p. m.]

*Copies may be obtained from the Office of Price Administration.

[1] 7 F.R. 3817, 5027, 5665, 7599, 8948.

PART 1390—MACHINERY AND TRANSPORTATION EQUIPMENT

[MPR 136 as Amended,[1] Amendment 61]

MACHINES AND PARTS AND MACHINERY SERVICES

A statement of the considerations involved in the issuance of this amendment has been prepared and is issued simultaneously herewith.*

Section 1390.25 (c) (21) is amended to read as follows:

§ 1390.25 * * *

(c) * * *

(21) *Lead acid storage batteries.* Notwithstanding the provisions of §§ 1390.5, 1390.6, 1390.7 and 1390.10, the maximum price applicable to the sale to any purchaser by the manufacturer, or a seller other than the manufacturer, of any lead acid storage battery or part, shall be the net price determined in accordance with the applicable provisions of §§ 1390.5, 1390.7 or 1390.10, plus an amount not exceeding one cent for each pound or major fraction of a pound, of lead contained in such battery or part: *Provided,* That the price so determined shall in no event exceed the highest price charged by the manufacturer, or seller other than the manufacturer, for such battery or part during the month of March 1942 to a purchaser of the same class.

* * * * *

§ 1390.31a *Effective dates of amendments.* * * *

(jjj) Amendment No. 61 (§ 1390.25 (c) (21)) to Maximum Price Regulation No. 136, as amended, shall become effective as of November 7, 1942.

(Pub. Laws 421, 729, 77th Cong.; E.O. 9250, 7 F.R. 7871)

Issued this 5th day of December 1942.

LEON HENDERSON,
Administrator.

[F. R. Doc. 42-12927; Filed, December 5, 1942; 11:25 a. m.]

PART 1390—MACHINERY AND TRANSPORTATION EQUIPMENT

[MPR 136, as Amended,[1] Amendment 62]

MACHINES AND PARTS AND MACHINERY SERVICES

A statement of the considerations involved in the issuance of this amendment has been issued simultaneously herewith and filed with the Division of the Federal Register.*

In § 1390.1 paragraph (b) is amended; in § 1390.4 new subparagraph (1) is added to paragraph (a); in § 1390.32 new paragraph (l) is added; and in § 1390.33 a new item is added in alphabetical order in paragraph (c), all as set forth below:

§ 1390.1 *Definition of "machines and parts" and "machinery services".* * * *

(b) The term "machinery service" means any operation in the processing, machining, welding, treating, finishing, testing, inspecting, adjusting, maintaining, repairing or rebuilding of a "machine or part" owned by another or of a product owned by another which, as a result of such operation, becomes a "machine or part", except that the machining of a gear, pinion, or sprocket in connection with the production thereof, whether or not performed on material furnished by the customer, shall in no event be deemed a "machinery service", but shall in all cases be deemed to constitute the sale of a gear, pinion, or sprocket, respectively.

§ 1390.4 *Maximum prices: general provisions.* (a) * * *

(1) Notwithstanding the foregoing provisions of this paragraph (a) and notwithstanding the title of § 1390.32, Appendix A, the base date for gears, pinions, sprockets, and speed reducers, as listed in paragraph (l) of Appendix A, shall be October 15, 1941. In applying the provisions of this Maximum Price Regulation No. 136, as amended, to gears, pinions, sprockets, and speed reducers, as listed in paragraph (l) of Appendix A, the date October 15, 1941, shall be substituted for the date October 1, 1941, wherever that date appears. Corresponding changes shall be made in the dates mentioned in paragraph (b) of § 1390.10.

§ 1390.32 *Appendix A: Machines and parts to which the October 1, 1941, date is applicable.* * * *

(l) *Machines and parts for which October 15, 1941, is the base date.* Gears, pinions, sprockets, and speed reducers, including gear motors and other motorized speed reducers, and variable speed gear drives, but not including the following: (1) automotive or tractor transmissions, transfer cases, power take-offs, differentials, or axle assemblies; (2) any items designed for use in private or commercial motor vehicles or any items specially designed for use in vehicles, aircraft, or equipment used primarily for military purposes; (3) any items sold or delivered pursuant to contracts entered into by the Army, Navy, Defense Plant Corporation, Maritime Commission, Panama Canal, Procurement Division of the Treasury, or any other agency of the United States prior to February 18, 1942; (4) any items covered in paragraph (j) of this section.

§ 1390.33 *Appendix B: Machines and parts to which the March 31, 1942, date is applicable.* * * *

(c) *Miscellaneous.*

Gears, pinions, sprockets, and speed reducers specially designed for use in vehicles, aircraft, or equipment used primarily for military purposes.

§ 1390.31a *Effective dates of amendments.* * * *

(kkk) Amendment No. 62 (§§ 1390.1 (b), 1390.4 (a) (1), 1390.32 (l), and 1390.33 (c)) to Maximum Price Regulation No. 136, as amended, shall become effective December 11, 1942.

(Pub. Laws 421 and 729, 77th Cong.; E.O. 9250, 7 F.R. 7871)

Issued this 5th day of December 1942.

LEON HENDERSON,
Administrator.

[F. R. Doc. 42-12928; Filed, December 5, 1942; 11:28 a. m.]

PART 1398—OFFICE AND STORE MACHINES

[Revised Rationing Order 4,[1] Amendment 7]

NEW AND USED TYPEWRITERS

The proviso to § 1398.104 (a) is revoked; § 1398.101 is amended to read as set forth below; and a new paragraph (g) is added to § 1398.112.

§ 1398.101 *Restriction of sales and delivery of typewriters.* (a) On and after December 5, 1942, notwithstanding any other provision of Revised Rationing Order No. 4, no person shall buy, sell, rent, loan, borrow, convert to use, or otherwise transfer or acquire a typewriter, or offer to do so, except as permitted by this section or by § 1398.102 (a), or by subparagraphs (1) to (6), inclusive, and subparagraph (9) of § 1398.102 (b), or by § 1398.103 (d), or by § 1398.104.

(b) At any time prior to January 1, 1943, any eligible person may purchase a typewriter for the purchase or rental of which a Certificate or Authorization was issued to him pursuant to this order at any time before December 1, 1942, regardless of whether the typewriter has been received or the Certificate or Authorization is outstanding.

(c) Nothing in this section shall be deemed to prohibit, regulate, or control the transfer or acquisition of the following typewriters:

(1) any typewriter manufactured prior to January 1, 1915;

(2) portable typewriters which lack two of the following three features: (i) tilting or folding paper-table, (ii) self-starter key, (iii) operator touch adjustment;

(3) typewriters of the following makes: Blickensderfer, Oliver, Barlock, Pittsburgh Visible, Fox, Harris, Rex, Demountable, Emerson, Fay Sholes, Hammond, Sholes Visible, Victor, Wellington, and Barr-Morse.

§ 1398.112 *Effective dates of amendments.* * * *

(g) Amendment No. 7 (§§ 1398.101 and 1398.104 (a)) shall become effective December 5, 1942.

(Pub. Law 421, 77th Cong.; W.P.B. Directive No. 1, Supplementary Directive No. 1D, and Conversion Order No. L-54-a, 7 F.R. 562, 1792, 2130)

Issued this 5th day of December 1942.

LEON HENDERSON,
Administrator.

[F. R. Doc. 42-12929; Filed, December 5, 1942; 11:25 a. m.]

---

*Copies may be obtained from the Office of Price Administration.

[1] 7 F.R. 5047, 5362, 5665, 5908, 6425, 6682, 6899, 6964, 6965, 6937, 6973, 7010, 7246, 7320, 7365, 7509, 7602, 7739, 7744, 7907, 7912, 7945, 7944, 8198, 8362, 8433, 8479, 8520, 8652, 8707, 8897, 9001, 8948, 9040, 9041, 9042, 9053, 9054, 9729.

[1] 7 F.R. 2317, 2792, 4179, 4488, 5188, 6773, 7405, 8809.

PART 1406—MECHANICAL POWER; TRANSMISSION EQUIPMENT

[Revocation of RPS 105]

GEARS, PINIONS, SPROCKETS AND SPEED REDUCERS

A statement of the considerations involved in the issuance of this order has been issued simultaneously herewith and filed with the Division of the Federal Register.*

Under the authority vested in the Price Administrator by the Emergency Price Control Act of 1942, as amended, and Executive Order No. 9250, *It is hereby ordered*, That Revised Price Schedule No. 105 (§§ 1406.1 to 1406.9, inclusive), *Gears, Pinions, Sprockets and Speed Reducers*,[1] be revoked.

This order shall become effective December 11, 1942.

(Pub. Laws 421 and 729, 77th Cong.; E.O. 9250, 7 F.R. 7871)

Issued this 5th day of December 1942.

LEON HENDERSON,
Administrator.

[F. R. Doc. 42-12930; Filed, December 5, 1942; 11:28 a. m.]

PART 1418—TERRITORIES AND POSSESSIONS

[MPR 194,[2] Amendment 7]

ALASKA

A statement of the considerations involved in the issuance of this amendment has been issued simultaneously herewith and has been filed with the Division of the Federal Register.*

Paragraph (d) is added to § 1418.51 and subparagraph (11) is added to § 1418.63 (a).

§ 1418.51 *Prohibition against dealing in commodities above maximum prices.* * * *

(d) Excluded from the operation of this regulation are all second-hand and used materials.

§ 1418.63 *Definitions.* (a) * * *

(11) "Second-hand and used materials" include all articles that have been in the physical possession of a consumer for a period of ninety days or more.

§ 1418.66 *Effective dates of amendments.* * * *

(g) Amendment No. 7 (§§ 1418.51 (d), 1418.63 (a) (11)) to Maximum Price Regulation No. 194 shall become effective December 7, 1942.

(Pub. Laws 421 and 729, 77th Cong.; E.O. 9250, 7 F.R. 7871)

Issued this 5th day of December 1942.

LEON HENDERSON,
Administrator.

[F. R. Doc. 42-12931; Filed, December 5, 1942; 11:25 a. m.]

*Copies may be obtained from the Office of Price Administration.

[1] 7 F.R. 1404, 1836, 2132, 2710, 2711, 8948.

[2] 7 F.R. 5909, 6268, 6744, 8023, 8358, 8947, 9195.

PART 1418—TERRITORIES AND POSSESSIONS

[MPR 201,[1] Amendment 3]

VIRGIN ISLANDS

A statement of the considerations involved in the issuance of this amendment has been issued simultaneously herewith and has been filed with the Division of the Federal Register.*

Paragraph (d) is added to § 1418.101 and subparagraph (12) is added to § 1418.113 (a).

§ 1418.101 *Prohibition against dealing in commodities above maximum prices.* * * *

(d) Excluded from the operation of this regulation are all second-hand and used materials.

§ 1418.113 *Definitions.* (a) * * *

(12) "Second-hand and used materials" include all articles that have been in physical possession of a consumer for a period of ninety days or more.

§ 1418.116 *Effective dates of amendments.* * * *

(c) Amendment No. 3 (§§ 1418.101 (d), 1418.113 (a) (12)) to Maximum Price Regulation No. 201 shall become effective December 7, 1942.

(Pub. Laws 421 and 729, 77th Cong.; E.O. 9250, 7 F.R. 7871)

Issued this 5th day of December 1942.

LEON HENDERSON,
Administrator.

[F. R. Doc. 42-12932; Filed, December 5, 1942; 11:25 a. m.]

PART 1499—COMMODITIES AND SERVICES

[Supp. Reg. 14[2] Under GMPR,[3] Amendment 74]

MODIFICATION OF MAXIMUM PRICES FOR CERTAIN COMMODITIES, SERVICES AND TRANSACTIONS

A statement of the considerations involved in the issuance of this amendment is issued simultaneously herewith and filed with the Division of the Federal Register.*

Subparagraph (47) is added in § 1499.73 (a) as set forth below:

§ 1499.73 *Modification of maximum prices established by § 1499.2 of General Maximum Price Regulation for certain commodities, services, and transactions.* (a) The maximum prices established by § 1499.2 of the General Maximum Price Regulation for the commodities, services, and transactions listed below are modified as hereinafter provided:

* * * * *

(47) *Sales of Remington "Envoy" portable typewriters*—(i) *Maximum price.* The maximum price, exclusive of Federal excise tax, for the sale by any person to a consumer, of a new Remington "Envoy" portable typewriter shall be $40.00.

(ii) *Tagging.* Every person who offers a new Remington "Envoy" portable typewriter for sale to a consumer shall attach to it a tag reading as follows, with the blank appropriately filled in:

The Office of Price Administration has established a Maximum Retail Price of $40.00 for this Remington "Envoy" portable typewriter, exclusive of Federal excise tax. Our selling price is $____.

* * * * *

(b) *Effective dates.* * * *

(75) Amendment No. 74 to Supplementary Regulation No. 14 (§ 1499.73 (a) (47)) shall become effective December 5, 1942.

(Pub. Laws 421 and 729, 77th Cong.; E.O. 9250, 7 F.R. 7871)

Issued this 5th day of December 1942.

LEON HENDERSON,
Administrator.

[F. R. Doc. 42-12933; Filed, December 5, 1942; 11:27 a. m.]

PART 1499—COMMODITIES AND SERVICES

[Order 167 Under § 1499.3 (b) of GMPR]

ELI LILLY AND COMPANY

For the reasons set forth in an opinion issued simultaneously herewith, *It is ordered:*

§ 1499.1183 *Approval of maximum prices for sales of 'Becotin'*—(a) *Sales by Eli Lilly and Company*—(1) *Maximum prices.* The maximum prices for sales by Eli Lilly and Company of 'Becotin' are established as set forth below:

Size of package:	*Maximum price per package*
30 capsules	$1.38
100 capsules	4.30
1000 capsules	39.90

(2) *Discounts, allowances, and price differentials.* Eli Lilly and Company shall apply to the maximum prices set forth in subparagraph (1) of this paragraph for its sales of 'Becotin' all quantity differentials, discounts for purchasers of different classes, trade practices, credit terms, practices relating to the payment of transportation costs, and any other customary discounts or allowances which were in effect in March, 1942, on its sales of 'Betalin Compound.'

(b) *Sales by wholesalers*—(1) *Maximum prices.* The maximum prices for sales by wholesalers of "Becotin" are established as set forth below:

[1] 7 F.R. 6269, 6744, 8947.

[2] 7 F.R. 5486, 5709, 6003, 5911, 6003, 6271, 6369, 6477, 6473, 6774, 6775, 6783, 6857, 6933, 6776, 6939, 7011, 7012, 6905, 7250, 7283, 7203, 7365, 7401, 7453, 7400, 7510, 7530, 604, 7538, 7511, 7536, 7535, 7739, 7671, 7012, 7914, 7946, 8237, 8024, 8199, 8351, 8358, 8524, 8652, 8707, 8881, 8899, 8899, 8932, 8950, 9131, 8953, 8954, 8955, 8959, 9043, 9043, 9186, 9186, 9337, 9391, 9495, 9496, 9639, 9786.

[3] 7 F.R. 3153, 3330, 3000, 3990, 3991, 4339, 4487, 4659, 4659, 4738, 5027, 5276, 5192, 5365, 5445, 5565, 5484, 5775, 5784, 5783, 6058, 6081, 6007, 6216, 6615, 6974, 6939, 7033, 7322, 7454, 7758, 7913, 8431, 8881, 9004, 8942, 9435, 9615, 9616.

Size of package:	*Maximum price per package*
30 capsules	$1.74
100 capsules	5.40
1000 capsules	50.40

When used in this order the term "wholesaler" means any person who buys "Becotin" and resells it, without substantially changing its form, to retailers.

(2) *Discounts, allowances, and price differentials.* Any wholesaler making sales of "Becotin" shall apply to the maximum prices set forth for such sales in subparagraph (1) of this paragraph all quantity differentials, discounts for purchasers of different classes, trade practices, credit terms, practices relating to the payment of shipping charges, and other customary discounts or allowances which were in effect in March, 1942, on sales by the wholesaler of "Betalin Compound" or on sales of the vitamin B complex product most comparable to "Becotin" if the wholesaler did not sell "Betalin Compound" in March, 1942.

(c) *Sales by retailers*—(1) *Maximum prices.* The maximum prices for sales by retailers of "Becotin," except for sales on prescription as provided in subparagraph (3) of this paragraph, are established as set forth below:

Size of package:	*Maximum price per package*
30 capsules	$2.61
100 capsules	8.10
1000 capsules	75.60

When used in this order the term "retailer" means any person who buys "Becotin" and resells it directly to consumers.

(2) *Discounts, allowances, and price differentials.* Any retailer making sales of "Becotin" shall apply to the maximum prices set forth for such sales in subparagraph (1) of this paragraph all quantity differentials, discounts for purchasers of different classes, trade practices, credit terms, practices relating to the payment of shipping charges, and other customary discounts or allowances which were in effect in March, 1942, on sales by the retailer of "Betalin Compound" or on sales of the vitamin B complex product most nearly comparable to "Becotin" if the retailer did not sell "Betalin Compound" in March, 1942.

(3) *Sales on prescription.* The maximum prices established by subparagraph (1) of this paragraph shall not apply to sales on prescription of "Becotin." The maximum price for a sale on prescription of "Becotin" shall be determined by the person making the sale on prescription in accordance with the provisions of § 1499.3 (a) of the General Maximum Price Regulation, except that no report of the maximum price so determined need be filed as required by that section.

(d) *Marking package with retail ceiling price.* Eli Lilly and Company shall mark each package of 30 capsules of "Becotin" sold by it with the words "Ceiling Price $2.61," each package of 100 capsules with the words "Ceiling Price $8.10," and each package of 1,000 capsules of "Becotin" with the words "Ceiling Price $75.60." These words shall be printed or stamped in letters at least one quarter as large as those used for the name of the product on the package in which the "Becotin" is customarily sold by the seller at retail to the ultimate consumer when it is not sold on prescription and the type shall be sufficiently bold and the words shall be printed or stamped in a color which sharply contrasts with the background so that the words are clearly legible. No retailer, except a person making a sale on prescription, shall make sales of "Becotin" unless the package in which the product is sold is marked with the retail ceiling price as required by this paragraph.

(e) *Notification of maximum prices*—(1) *By Eli Lilly and Company to direct-buying retailers.* Eli Lilly and Company shall supply to each retailer before or at the time of its first delivery of "Becotin" to such retailer a written statement as follows:

The OPA has authorized us to charge $1.38 for each package of 30 capsules of "Becotin," $4.30 for each package of 100 capsules of "Becotin," and $39.90 for each package of 1,000 capsules of "Becotin" subject to all customary discounts and allowances. Your ceiling prices are authorized to be $2.61 for each package of 30 capsules, $8.10 for each package of 100 capsules and $75.60 for each package of 1,000 capsules, except for sales on prescription. Maximum prices for sales on prescription must be determined under section 3 (a) of the General Maximum Price Regulation, except that no report of the maximum price need be filed. OPA requires that you keep this notice for examination.

(2) *By Eli Lilly and Company to wholesalers and to retailers via wholesalers.* Eli Lilly and Company shall supply to each wholesaler before or at the time of its first delivery of 'Becotin' and in addition shall include with each shipping unit of such product for a period of three months a written notification. If such notification is enclosed in a shipping unit a legend shall be affixed outside of such unit to read "Retailer's Notice Enclosed." The written notification shall read as follows:

The OPA has authorized us to charge $1.38 for each package of 30 capsules, $4.30 for each package of 100 capsules, and $39.90 for each package of 1,000 capsules, subject to all customary discounts and allowances. Wholesalers are authorized to establish ceiling prices of $1.74 for each package of 30 capsules, $5.40 for each package of 100 capsules, and $50.40 for each package of 1,000 capsules, subject to all customary discounts and allowances. Retailers are authorized to establish ceiling prices of $2.61 for each package of 30 capsules, $8.10 for each package of 100 capsules, and $75.60 for each package of 1,000 capsules, except for sale on prescriptions. The maximum prices for sales on prescriptions shall be determined under section 3 (a) of the General Maximum Price Regulation, except that no report of the maximum price need be filed. If the initial sale by a wholesaler to a retailer is a split-case sale, the wholesaler is required to provide such retailer with a copy of this notice. OPA requires that you keep this notice for examination.

(f) *Definitions.* When used in this order the term:

(1) "'Becotin'" means a vitamin preparation, each capsule of which contains the following amounts of specific vitamin substances:

	mg.
Vitamin B_1 (Thiamin Chloride)	3.0
Vitamin B_2 (Riboflavin)	4.0
Nicotinamide	30.0
Calcium Pantothenate	11.0
Vitamin B_6 (Pyridoxine Hydrochloride)	1.5
Liver-Stomach Concentrate	600.0

(2) "'Betalin Compound'" means a vitamin preparation, each capsule of which contains the following amounts of specific vitamin substances:

	mg.
Vitamin B_1 (Thiamin Chloride)	1.0
Vitamin B_2 (Riboflavin)	0.333
Nicotinamide	2.0
Calcium Pantothenate	0.25
Vitamin B_6 (Pyridoxine Hydrochloride)	0.2
Liver-Stomach Concentrate	600.0

(g) This Order No. 167 may be revoked or amended by the Price Administrator at any time.

(h) This Order No. 167 (§ 1499.1183) shall become effective on December 5, 1942.

(Pub. Laws 421 and 729, 77th Cong.; E.O. 9250, 7 F.R. 7871)

Issued this 5th day of December 1942.

LEON HENDERSON,
Administrator.

[F. R. Doc. 42-12934; Filed, December 5, 1942; 11:26 a. m.]

PART 1499—COMMODITIES AND SERVICES

[Amendment 1 to Order 131 Under § 1499.3 (b) of GMPR]

WM. P. POYTHRESS AND CO., INC.

Correction

In the bracketed designation of the document appearing on page 10150 of the issue for Saturday, December 5, 1942, the number "1" was omitted after the word "amendment".

TITLE 38—PENSIONS, BONUSES, AND VETERANS' RELIEF

Chapter I—Veterans' Administration

PART 10—INSURANCE

SOLDIERS' AND SAILORS' CIVIL RELIEF ACT AMENDMENTS OF 1942

Sec.
10.3320 The insured.
10.3321 The policy.
10.3322 The premium.
10.3323 The insurer.
10.3324 Amount of insurance.
10.3325 Calculation of values.
10.3326 Application.
10.3327 Benefits.
10.3328 Indemnity.
10.3329 Maturity.
10.3330 Settlement.
10.3331 Policy under protection of Act.
10.3332 Election by insurer.
10.3333 Beneficiary or assignee.
10.3334 Termination.

AUTHORITY: §§ 10.3320 to 10.3334 inclusive, issued under Pub. Law 732, 77th Cong.

§ 10.3320 *The insured.* The term "insured" includes any person on active duty with the military and naval forces of the United States (including Coast

Guard) and any member of the Women's Army Auxiliary Corps, whose life is insured under and who is the owner and holder of and has an interest in a policy as hereinafter defined.

(a) The phrase "person in military service" as used in section 400 (c) is defined in section 101, Article I of the Act approved October 17, 1940, as amended by section 19 of Public 554, approved May 14, 1942, to be any member of the Army of the United States, the United States Navy, the Marine Corps, the Coast Guard, and all officers of the Public Health Service detailed by proper authority for duty either with the Army or the Navy and any member of the Women's Army Auxiliary Corps, and the term "military service" as hereinafter used shall mean service in the Army of the United States, the United States Navy, the Marine Corps, the Coast Guard and the Women's Army Auxiliary Corps. A statement over the signature of the Commanding Officer or a commissioned officer of equal or higher rank than the insured, on the application by the insured, may be accepted as a certification that the insured is a person in the military service. If the insured is on detached service, the application may be witnessed by the person who has custody of the insured's service record. If application is made by a person designated by the insured, or is made by the beneficiary, evidence that the insured is a person in the military service will be procured by the Veterans' Administration from the service department. (October 6, 1942)

§ 10.3321 *The policy.* The term "policy" includes any contract of life insurance on a life or endowment or term plan, and any benefit contract in the nature of life insurance arising out of membership in any fraternal or beneficial association, which was made and on which a premium was paid before date of approval of the Soldiers' and Sailors' Civil Relief Act Amendments of 1942 (October 6, 1942), or not less than thirty days before the date the insured entered into the military service. A policy is not eligible for protection under the Act if it contains any provision excluding or restricting liability for death arising from or in connection with military service, or any activity which the insured may be called upon to perform in connection with his military service, or requires the payment of an additional premium because of military service. The provisions of the Act are not applicable to policies of United States Government Life Insurance and National Service Life Insurance.

(a) Any provision in a policy that may limit or eliminate a benefit other than the primary death benefit will not, because of such provision, place the policy outside the protection of the Act if it is otherwise eligible for protection.

(b) A policy must be in force on a premium paying basis at the time of application for benefits under the Act.

(c) An annuity contract, if it provides payment of a substantial death benefit in the nature of life insurance, may be included within the provisions of the Act if otherwise eligible. Group insurance will not be included unless an individual and separate contract of insurance is completely released to the insured and thereafter comes within the provisions of the Act as a policy.

(d) The phrase "face amount of insurance" as used in the regulations will mean the amount of insurance payable as a death benefit and if a policy provides for instalment payments as a death benefit they will be calculated in accordance with the terms of the policy on the hypothesis of the death of the insured on the due date of the first premium to be guaranteed by the Government: *Provided,* That any indebtedness, or any accruals (such as paid-up additions, dividend accumulations, etc.) that may be added to or taken from the amount payable as the death benefits will not be used in calculating the face amount of a policy. (October 6, 1942)

§ 10.3322 *The premium.* The term "premium" includes the amount specified in the policy as the stipend to be paid by the insured at regular intervals during the period therein stated, and membership dues and assessments in an association.

(a) The premium on a policy will be calculated on an annual basis, and if the annual premium is not stated on the policy, the insurer will make a calculation of the premiums for payment in advance and discounted at not less than 3½ per centum, subject to approval by the Veterans' Administration.

(b) Premiums will not be guaranteed for any additional death benefit insurance which together with the amount of the primary death benefit would result in a payment in excess of $10,000 in the event of death of the insured, nor will premiums be guaranteed for benefits additional to the primary death benefit if liability for such additional benefits is excluded or restricted by military service or any activity which the insured may be called upon to perform in connection with his military service: *Provided,* That in the event the premiums for primary and additional benefits are not separable under the terms of the policy the entire premium will be guaranteed if the policy is otherwise eligible for protection under the law.

(c) An automatic loan provision or other such benefit in a policy shall not be operative during the period of protection under the Act to avoid the provisions of the Act in relation to any premium that became payable not more than thirty-one days prior to date of application, and thereafter while the policy is protected by the provisions of the Act. (October 6, 1942)

§ 10.3323 *The insurer.* The term "insurer" includes any firm, corporation, partnership, or association chartered or authorized to engage in the insurance business and to issue a policy by the laws of a State of the United States or the United States and is subject to the jurisdiction of the courts of the several States or the United States. (October 6, 1942)

§ 10.3324 *Amount of insurance.* The provisions of the Act are not applicable to insurance in excess of ten thousand dollars on the life of one insured, and a policy (or policies) which provides insurance in excess of that amount will be divided at the request of the Veterans Administration; however, this shall not delay insurance in the amount of ten thousand dollars from receiving the protection afforded policies under the Act because of administrative procedure or any difficulties encountered in procuring possession of an outstanding policy. If applications are made by an insured on policies for an amount exceeding ten thousand dollars (one or more policies with one or more insurers), without indicating a preference, the policy which affords the best security to the Government will be given preference by the Veterans Administration. (October 6, 1942)

§ 10.3325 *Calculation of values.* (a) The term "cash surrender value" shall include any dividend accumulations, the value of any paid-up additions, and any other amounts available as a credit under the policy less the indebtedness with interest accumulations to the day on which the policy ceases to be under the protection of the Act.

(b) The term "indebtedness" will include any loan, lien, or other obligation under the policy due by the insured that would be deducted by the insurer at the time of making settlement under the policy.

(c) The use of the terms "interest" and "rate of interest" will follow the usual practice and procedure of the insurer but the rate of interest shall not exceed the rate fixed for policy loans. If no rate of interest on indebtedness is specifically fixed in the policy, the rate shall be the rate fixed for policy loans in other policies issued by the insurer at the time the policy brought under the Act was issued. Any rate of interest not specifically fixed in the policy will be subject to approval by the Veterans' Administration. (October 6, 1942)

§ 10.3326 *Application.* (a) The benefits of the Act are not available except upon application by the insured or by a person designated by the insured or by the beneficiary if the insured is outside the continental United States (not including Alaska and the Panama Canal Zone). Any writing signed by the insured designating a person, firm, or corporation to make application for benefits under the Act shall be sufficient authority for the making of such application for the insured by such agent. When application is made by person designated by the insured, the instrument or other writing authorizing such action must be attached to the application executed by the agent. The form will set forth that the application therein made is a consent by the insured to such modifications of the terms of the contract of insurance as are made necessary by the provisions of the Act. The insured and the insurer will execute such other forms as may be advisable and will furnish

such reports concerning the policy as may be deemed necessary. The insurer will be deemed to have agreed to such modifications of the policy as may be required to give the Act full force and effect with respect to such policy.

(b) The form of application for benefits as prescribed by regulations will be identified as Veterans Administration Insurance Form 380. An informal application will be supplemented by an application on the prescribed form. The original of the application for benefits will be mailed or delivered to the insurer at its principal office or to the office or agency to which the last premium on the policy has been paid. The copy of the application for benefits will be mailed or delivered to the Veterans Administration at Washington, D. C.

(c) When application for benefits is received by an insurer, a report thereof will be made within thirty days to the Veterans' Administration at Washington, D. C. on the form prescribed for that purpose and identified as Veterans' Administration Insurance Form 381. The insurer may submit with the report a statement setting forth any additional information deemed necessary to the adjudication of the application, and any facts and reasoning as to why the policy should or should not be protected under the Act.

(d) Upon receipt of a report from the insurer on Insurance Form 381, the Director of Insurance will determine if the policy is entitled to the protection of the Act, and the insurer and the insured will be notified of the decision. (October 6, 1942)

§ 10.3327 *Benefits.* Any policy found to be entitled to protection under the provisions of the Act will not lapse or otherwise terminate or be forfeited for the nonpayment of a premium or the nonpayment of any indebtedness or interest during the period of military service of the insured and two years after the expiration of such service, but this guarantee will not extend for more than two years after the date when the Act ceases to be in force.

(a) For the period during which a policy is protected by the provisions of the Act, any dividends, return of premiums, or other such monetary benefits arising out of the contract or by reason thereof, will be held subject to disposal or to be applied as may be approved by the Veterans' Administration.

(b) A policy will not be removed from the protection of the Act by reason of a payment made to the insurer by or on behalf of the insured, but any tender of a premium (in whole or in part) shall be applied on the indebtedness established under authority of the Act against the policy: *Provided,* That nothing herein shall prevent an insured from continuing payment to the insurer of premiums to cover any additional benefits (such as double indemnity, waiver of premium, etc.) where such premiums may not be included in the amount guaranteed by the Government. (October 6, 1942)

§ 10.3328 *Indemnity.* The United States shall have a lien upon any policy receiving the benefits of the Act, subject only to any prior lien and no loan or settlement or payment of dividend may be made by the insurer which will prejudice the security of the Government's lien. Before any dividend is paid or any loan or settlement of any kind or character is made with the insured on a policy while protected by the provisions of the Act, the written consent of the Veterans' Administration must be obtained. (October 6, 1942)

§ 10.3329 *Maturity.* (a) If a policy protected by the provisions of the Act is terminated by death of the insured, the amount of any unpaid premiums, with interest at the rate provided for policy loans, will be deducted from the proceeds of the policy, and will be reported by the insurer to the Veterans' Administration.

(b) The phrase "maturity of a policy as a death claim or otherwise" (section 405, Soldiers' and Sailors' Civil Relief Act Amendments of 1942), will not include a termination or maturity of a policy as a disability claim, and the policy will continue under the provisions of the Act as if there had been no maturity, but the Government shall not be liable for any premiums that the insured would have been relieved of paying under any provisions for payment of premiums in the policy.

(c) If a policy matures as a claim, except a death claim, or if protection under the Act is otherwise terminated before expiration of the period fixed by the Act, the amount of any unpaid premiums, with interest at the rate provided for policy loans, will be deducted and the insurer will immediately notify the Veterans' Administration and will make a complete statement of the account as to that particular policy.

(d) If a policy is not removed from the protection of the Act prior to the expiration of the period of protection, at that time the insurer will submit to the Veterans' Administration a complete statement of the account as to that particular policy.

(e) The statement of account will show the amount of indebtedness by reason of the premiums with interest and the credits, if any, then available and will be subject to audit and approval by the Director of Insurance. The statement of account will include the rate of interest charged on all indebtedness, the dates of debit and credit entries, and such other information as may be deemed necessary in making an audit of the account. If there is a balance due by the United States to the insurer, payment in favor of the insurer will be certified. (October 6, 1942)

§ 10.3330 *Settlement.* The payment of premiums and interest thereon at the rate fixed in the policy for policy loans while the policy is protected under the provisions of the Act is guaranteed by the United States, and if the amount so guaranteed is not paid to the insurer prior to the expiration of the period of protection the amount then due will be treated by the insurer as a loan on the policy. However, if at the expiration of the period of protection the cash surrender value of the policy is less than the amount guaranteed, the policy shall cease and terminate and the United States will pay to the insurer the difference between the cash surrender value of the policy and the amount guaranteed. If the insured is in the military service when the Act ceases to be in force, the period of protection of a policy under the Act will expire two years after the date when the Act ceases to be in force and settlement will be made as above provided. Any amount paid by the United States to an insurer on account of a policy protected under the provisions of the Act will become a debt due the United States by the insured on whose account payment was made and such amount will be collected by deduction from any amount due said insured by the United States or as otherwise authorized by law. (October 6, 1942)

§ 10.3331 *Policy under protection of Act.* A policy placed under the protection of Article IV of the Soldiers' and Sailors' Civil Relief Act of 1940 and which was under the protection thereof on October 6, 1942, by reason of a finding having been made prior to that date, will remain subject to the provisions of said Act and the regulations published under authority thereof except that the policy will be subject to the benefits and privileges governing the period of protection and settlement as provided in sections 403, 404, and 405 of Article IV of the Soldiers' and Sailors' Civil Relief Act Amendments of 1942. If a policy was protected under the provisions of said Act of 1940 and the period of protection terminated prior to October 6, 1942, the provisions of Article IV of the Amendments of 1942 and the regulations published under authority thereof are not applicable to the policy except that any premium which the Government has guaranteed under such policy will be for settlement in accordance with the mode of settlement elected by the insurer as provided in section 408 of the Amendments of 1942. (October 6, 1942)

§ 10.3332 *Election by insurer.* Any insurer holding certificates issued under authority of Article IV of the Soldiers' and Sailors' Civil Relief Act of 1940 on account of policies protected under said Article, may surrender such certificates to the United States on or before January 4, 1943, and elect to receive the guarantee of premiums and the mode of settlement for such policies as provided by Article IV of the Soldiers' and Sailors' Civil Relief Act Amendments of 1942. The insurer desiring to take such action shall state that, pursuant to the provisions of Section 408 of Article IV of the Soldiers' and Sailors' Civil Relief Act Amendments of 1942, it elects to receive the guarantee of unpaid premiums and interest thereon and the mode of settlement as provided by said Amendments, in lieu of the method of settlement and the requirement for accounts and reports prescribed by Article IV of the Soldiers' and Sailors' Civil Relief Act of 1940, and that it therefore surrenders to the United States all certificates of indebtedness issued to it by the Administrator of Veterans Affairs under said Act, giving the numbers of certificates sur-

rendered and attaching same to the release signed by the insurer. The insurer will also submit to the Veterans Administration at the earliest practicable date a schedule of all policies which were covered under Article IV of the Soldiers' and Sailors' Civil Relief Act of 1940, giving name of insured, face amount of policy, policy number and date of application for protection under said Act. In the case of policies as to which the period of protection expired prior to October 6, 1942, if the insurer has elected to accept the provisions of section 408 (2) of the Soldiers' and Sailors' Civil Relief Act Amendments of 1942 within the time specified therein, the insurer will submit the statement of account provided by § 10.3329 (d) and (e), ("Maturity") of this chapter, and in case there is a balance due by the United States to the insurer, payment in favor of the insurer will be certified. If the insurer does not elect to accept the provisions of section 408 (2) of the Soldiers' and Sailors' Civil Relief Act Amendments of 1942, on or before January 4, 1943, then the provisions of the Soldiers' and Sailors' Civil Relief Act of 1940 and the regulations published pursuant thereto, will govern the accounting as between the insurer and the Government. (October 6, 1942)

§ 10.3333 *Beneficiary or assignee.* In administering the provisions of Article IV of the Act, all matters pertaining thereto shall be confined to the interest of the insured, the insurer, and the Government; therefore, it will not be necessary to procure the consent of a beneficiary, or an assignee, or any person, who may have a right or interest, either vested or inchoate, in the proceeds of the policy, as a prerequisite to placing a policy under the protection of the Act. Any existing right of an insured to change a beneficiary designation or select an optional settlement for a beneficiary while the policy is under the protection of the Act is not affected by the provisions of the Act. (October 6, 1942)

§ 10.3334 *Termination.* Section 604 of Soldiers' and Sailors' Civil Relief Act of 1940, provides that the Act shall remain in force until May 15, 1945: *Provided,* That should the United States be then engaged in a war, the Act shall remain in force until such war is terminated by a treaty of peace proclaimed by the President and for six months thereafter. (October 6, 1942)

FRANK T. HINES,
Administrator.

[F. R. Doc. 42-12920; Filed, December 5, 1942; 11:40 a. m.]

TITLE 49—TRANSPORTATION AND RAILROADS

Chapter I—Interstate Commerce Commission

PART 115—RECORDS OF PIPE LINE COMPANIES

DESTRUCTION OF RECORDS

At a session of the Interstate Commerce Commission, Division 1, held at its office in Washington, D. C., on the 25th day of November 1942.

The matter of the Regulations to Govern the Destruction of Records of Carriers by Pipe Lines to be prescribed for and kept by pipe lines being under consideration by the Division, pursuant to the authority of section 20 of the Interstate Commerce Act, and upon consideration of the matters and things involved, and the Division having found that the Regulations to Govern the Destruction of Records of Carriers by Pipe Lines, issue of 1943, hereto attached and made a part hereof, are necessary for purposes of administration of the provisions of Part 1 of the Act. *It is ordered:*

Regulations prescribed. (a) Every carrier by pipe line subject to the provisions of the Interstate Commerce Act, and every trustee, executor, administrator, or assignee of any such pipe line carrier, are hereby required to comply with the Regulations to Govern the Destruction of Records of Carriers by Pipe Lines, issue of 1943, in the destruction and retention of their operating, accounting and financial papers, records, books, blanks, tickets, stubs, and documents of carriers by pipe lines.

(b) *Effective date and supersedure.* The issue of 1943, Regulations to Govern the Destruction of Records of Carriers by Pipe Lines, shall become effective on January 1, 1943, and the order and regulations issued and prescribed June 28, 1915, shall thereupon be canceled and superseded.

And it is further ordered, That a copy of this order and the Regulations to Govern the Destruction of Records of Carriers by Pipe Lines herein prescribed shall be served upon every pipe line carrier subject to the Act and every trustee, executor, administrator, or assignee of any such pipe line carrier, and that notice of this order be given to the general public by depositing a copy thereof in the office of the Secretary of the Commission at Washington, D. C., and by filing it with the Director of the Division of the Federal Register, The National Archives.

Sec.
115.1 Authority to destroy certain records.
115.2 Preservation of other records; special permission to destroy.
115.3 Officer having supervision of destruction.
115.4 Written authority of officer having supervision of destruction.
115.5 Certificates of destruction.
115.6 Committee for destruction of certain records.
115.7 Method of destruction.
115.8 Accidental destruction of accounts, records, and memoranda.
115.9 Duplicate accounts, records, and memoranda.
115.10 List of accounts, records, and memoranda authorized to be destroyed, and periods of retention.

AUTHORITY: §§ 115.1 to 115.10 inclusive, issued under 24 Stat. 386, 34 Stat. 593, 41 Stat. 493, 46 Stat. 251, 49 Stat. 543, 54 Stat. 916; 49 U. S. Code 20.

Special note: The following extract from section 20 of the Interstate Commerce Act is here quoted for convenient reference thereto by carriers:

Any person who shall knowingly and willfully make, cause to be made, or participate in the making of, any false entry in any annual or other report required under this section to be filed, or in the accounts of any book of accounts or in any records or memoranda kept by a carrier, or required under this section to be kept by a lessor or other person, or who shall knowingly and willfully destroy, mutilate, alter, or by any other means or device falsify the record of any such accounts, records, or memoranda, or who shall knowingly and willfully neglect or fail to make full, true, and correct entries in such accounts, records, or memoranda of all facts and transactions appertaining to the business of the carrier, lessor, or person, or shall knowingly and willfully keep any accounts, records, or memoranda contrary to the rules, regulations, or orders of the Commission with respect thereto, or shall knowingly or willfully file with the Commission any false report or other document, shall be deemed guilty of a misdemeanor and shall be subject, upon conviction in any court of the United States of competent jurisdiction to a fine of not more than five thousand dollars or imprisonment for not more than two years, or both such fine and imprisonment: *Provided,* That the Commission may in its discretion issue orders specifying such operating, accounting, or financial papers, records, books, blanks, tickets, stubs, correspondence, or documents of such carriers, lessors, or other persons as may, after a reasonable time, be destroyed, and prescribing the length of time the same shall be preserved.

The regulations set forth in this order pertain only to the accounts, records, and memoranda named or described herein. All accounts, records, and memoranda not indicated in the regulations remain under the prohibition of destruction contained in section 20 of the act.

It is not intended that these regulations shall be interpreted as requiring that the records herein named shall be installed, when such records are not already kept by a carrier.

The following Regulations to Govern the Destruction of Records of Carriers by Pipe Lines subject to the Interstate Commerce Act are in lieu of Part 110, Subpart E and Part 115 of Title 49, Code of Federal Regulations.

§ 115.1 *Authority to destroy certain records.* Each and every carrier by pipe line subject to Part I of the Interstate Commerce Act and each and every trustee, executor, administrator or assignee of any such carrier, is permitted to destroy the accounts, records, and memoranda named or described in these regulations, after preserving the same for the periods of time respectively specified and upon complying with the requirements of the regulations.

§ 115.2 *Preservation of other records; special permission to destroy.* (a) All accounts, records, and memoranda of such carriers, other than those the destruction of which is permitted in the said regulations, shall remain under the prohibition of destruction contained in section 20 of the Interstate Commerce Act as amended: (b) However, in case any such carrier desires to destroy any accounts, records, or memoranda other than those hereinafter named it may petition the Commission to that effect, exhibiting a full and detailed description of the accounts, records, or memo-

randa in question, clearly explaining their character, their use, and their purpose; it being understood that any order entered by the Commission on any such petition shall, unless otherwise provided, be limited in its force and effect to the particular carrier presenting such petition.

§ 115.3 *Officer having supervision of destruction.* (a) Supervision of the destruction of accounts, records, and memoranda shall be assigned to an officer appointed by the board of directors or, if the carrier's organization shall require it, to two officers so appointed. Such officer or officers may be given (1) general supervision of the destruction of all accounts, records, and memoranda the destruction of which is permitted by these regulations, or (2) authority over the destruction of such of these accounts, records, and memoranda as may be specified by the board of directors. A copy of the resolution of appointment shall be filed with the Commission before the destruction of any of the accounts, records, or memoranda involved. Pending action by the board of directors, an appointment by an executive committee, or by a similarly authorized committee of the board of directors, shall have the same effect as if made by the board of directors.

(b) If the property of a carrier is in the hands of a trustee, executor, administrator, or assignee, the officer or officers to have supervision of the destruction of accounts, records, and memoranda shall be designated by the trustee, executor, administrator, or assignee. A copy of the order designating such officer or officers shall be filed with the Commission before the destruction of any of the accounts, records, or memoranda involved.

(c) In designating an officer to have general supervision of the destruction of accounts, records, and memoranda it would be preferable to designate by title only, rather than by name and title, and thus obviate the necessity of filing a new resolution each time a successor in the office is appointed.

§ 115.4 *Written authority of officer having supervision of destruction.* (a) When any accounts, records, or memoranda are to be destroyed, an officer having supervision of the destruction of accounts, records, or memoranda (as designated in compliance with § 115.3 (a) and § 115.3 (b)) shall issue a written authority naming the person or persons by whom the accounts, records, or memoranda are to be destroyed (except as provided for in § 115.9).

(b) The written authority (1) may be confined to certain accounts, records, and memoranda which have been retained for the periods of time specified in these regulations and which the carrier then desires to destroy, in which case it shall indicate:

(i) A list of the accounts, records, or memoranda to be destroyed, expressed either in form numbers or by descriptive titles; and

(ii) The period or periods covered by the accounts; records, or memoranda the destruction of which is authorized; or (2) may be of continuing effect, applying to any or all the accounts, records, and memoranda named herein as the periods of retention of such accounts, records, or memoranda attain the limits specified herein.

(c) Such written authority, or a certified copy thereof, shall be filed in the office of the issuing officer as a permanent part of the carrier's records. It is not required that copies of the written authorities be filed with the Commission.

§ 115.5 *Certificates of destruction.* (a) The person or persons upon whom devolves the duty of the direct supervision of the destruction of the accounts, records, or memoranda under the authority referred to in § 115.4 (b) shall make certificate (except as provided for in § 115.5 (d) and § 115.9) setting forth that the accounts, records, or memoranda listed in the said authority have been destroyed and that no other accounts, records, or memoranda than those so listed have been destroyed therewith.

(b) If an authority as referred to in § 115.4 (b) is given, a certificate of destruction shall be made listing either by form numbers or descriptive titles the accounts, records, and memoranda destroyed, naming the period or periods covered by the accounts, records, or memoranda, and stating that no other accounts, records, or memoranda than those so listed have been destroyed therewith. Either (1) a separate certificate shall be made each time any accounts, records, or memoranda are destroyed, or (2) cumulative certificates shall be made with entries each time any accounts, records, or memoranda are destroyed.

(c) Certificates of destruction shall be forwarded promptly to the officer having supervision of the destruction of accounts, records, and memoranda who issued the written authority and shall be retained in his office as a permanent part of the carrier's records. In case cumulative certificates are made they shall be forwarded to such officer periodically, but at least once every 6 months. It is not required that copies of the certificates of destruction be filed with the Commission.

(d) Certificates of destruction need not be made for accounts, records, and memoranda, the destruction of which, in the list in § 115.10 hereof, is made optional with the carrier, but a written authority, either for specific records or of continuing effect (except as provided for in § 115.9), shall be issued by the officer having supervision of the destruction of such accounts, records, and memoranda.

§ 115.6 *Committee for destruction of certain records.* At the option of the carrier the board of directors may from time to time name a committee to destroy canceled stock certificates, bonds, or other records covered by item B-3 of § 115.10 in lieu of delegating the authority for the destruction to an officer, as provided in § 115.3 (a). A copy of the resolution of the board of directors naming such committee shall be filed with the Commission before the destruction of any of the records involved, and a certificate of destruction shall be permanently retained by the carrier. Certificates of destruction giving full descriptive reference to the documents destroyed shall be made by the person or persons appointed by the officer having supervision of the destruction of records or by this committee. When documents represent debt secured by mortgage, the certificates of destruction shall also be authenticated by representatives of the trustees acting in conjunction with this committee or shall have the trustees' acceptance thereon.

§ 115.7 *Method of destruction.* (a) The precise method of the destruction of accounts, records, or memoranda is not prescribed. The Commission is not concerned with the method of destruction, whether by fire, sale or otherwise, so long as the destruction is authorized and a certificate of destruction is filed as required by these regulations.

(b) If the accounts, records, and memoranda are not actually destroyed by the carrier, but are disposed of by sale or otherwise, the certificate of destruction shall so state. Attention is called to section 15 of the Interstate Commerce Act, which provides that a carrier shall not divulge to any person information concerning the business of a shipper or consignee which may be used to the detriment of such shipper or consignee. Responsibility for possible infringement of this provision of the law by disposing of its records by other than actual destruction would rest with the carrier.

§ 115.8 *Accidental destruction of accounts, records, and memoranda.* If any accounts, records, or memoranda are destroyed accidentally by fire, flood, or other casualty a statement shall be prepared listing so far as may be possible the records destroyed and detailing the circumstances in connection with the fire or other casualty. This statement shall be authenticated by an officer or some responsible employee of the company and shall be filed with the officer having supervision of the destruction of accounts, records, and memoranda. A copy of the statement shall be filed promptly with the Commission.

§ 115.9 *Duplicate accounts, records, and memoranda.* Provision is made in item P-3 of § 115.10 for the optional destruction of duplicate copies of accounts, records, and memoranda when such copies are not specifically provided for elsewhere in these regulations and when they contain no information not shown on the originals. In destroying such copies carriers may dispense with the written authorities and the certificates of destruction. The originals (or one true copy) shall be retained for the respective periods named for such records in the regulations.

§ 115.10 *List of accounts, records, and memoranda, and periods of retention.* The following list[1] is indicative of accounts, records, and memoranda of carriers by pipe lines specifically referred to by the regulation embodied in § 115.1. The classification of the accounts, rec-

[1] Filed as part of the original document. Requests for copies should be addressed to the Interstate Commerce Commission.

ords, and memoranda enumerated below under the various general headings is merely for convenient reference and is more or less arbitrary. The regulations are intended to apply to the items as named or described, regardless of the classification and regardless of where filed. Of the accounts, records, and memoranda which are to be retained permanently only the more important are indicated in the list, such specific mention being made so that they may not be confused with any accounts, records, or memoranda which the carrier is hereby given permission to destroy.

By the Commission, Division 1.

[SEAL] W. P. BARTEL, *Secretary.*

[F. R. Doc. 42-12955; Filed, December 7, 1942; 11:40 a. m.]

Notices

POST OFFICE DEPARTMENT.

Office of the Postmaster General.

VIOLATION OF PRIVATE EXPRESS STATUTES

NOVEMBER 20, 1942.

It having been made to appear to the Postmaster General upon evidence satisfactory to him that American Dealers Service, Inc., its officers, agents and employees, at the City of New York, New York, have been and now are violating section 181 of the Criminal Code (Title 18 U.S.C. sec. 304) by establishing and carrying on a private express for compensation for the conveyance of letters and causing and providing for the conveyance of letters and packets by regular trips and at stated periods over post routes in the City of New York on which mail is regularly carried;

Now the Postmaster General orders and directs the Chief Post Office Inspector and such Post Office Inspectors as the latter may authorize and designate, at all times pending further order of the Postmaster General, to seize, pursuant to sections 3990 and 4017 of the Revised Statutes (39 U.S.C. sec. 498), all letters which are being carried for compensation by American Dealers Service, Inc., its successors or assigns, or by any officer, agent or employee thereof, on any post route in the City of New York, with the purpose and intention of delivering the same to any person, association, firm, co-partnership or corporation, and to convey the same to the Main Post Office in the City of New York. The term "letters" as used herein includes all checks with detachable vouchers, statements, memoranda or stubs thereto attached or affixed. The Postmaster General directs that receipts be executed and delivered to the persons from whom seizures are made, with copies to American Dealers Service, Inc., for letters thus seized, and that custody of such letters be retained by said Post Office until further order or direction of the Postmaster General.

Any person, association, firm, co-partnership or corporation considering himself or itself aggrieved by this order or any seizure thereunder may apply in writing to the Postmaster General at Washington, D. C., for a hearing and for an order modifying, amending or retracting this order in whole or in part, or setting aside such seizures or for the return of letters seized. Upon request full and prompt opportunity will be afforded to produce all relevant evidence and to be heard in support of his or its application in person or by counsel.

The Postmaster General further directs that copies of this order shall be mailed to American Dealers Service, Inc., and to the persons, associations, firms, co-partnerships or corporations whose letters may be seized hereunder, if their addresses can be ascertained, as soon as practicable after the seizure thereof.

Subject to the further order of the Postmaster General.

[SEAL] FRANK C. WALKER, *Postmaster General.*

[F. R. Doc. 42-12957; Filed, December 7, 1942; 12:01 p. m.]

DEPARTMENT OF THE INTERIOR.

Bituminous Coal Division

[Docket No. A-1694]

DISTRICT BOARD 9

MEMORANDUM OPINION, ETC.

In the matter of the petition of District Board No, 9 requesting the establishment both temporary and permanent of minimum prices for coals of certain mines in District No. 9.

In the matter of the petition of District Board No. 9 requesting reclassification of the coals of the Ashmore & Poe Brothers' Mine, Mine Index No. 860 in District No. 9.

Memorandum opinion and order severing Docket No. A-1694, Part II from Docket No. A-1694 and notice of and order for hearing in Docket No. A-1694, Part II.

The original petition in the above-entitled matter which was filed with this Division pursuant to section 4 II (d) of the Bituminous Coal Act of 1937, requested the issuance of an order establishing temporary and permanent price classifications and minimum prices for the coals of certain mines in District 9 and also requested reclassification of the coals of Ashmore & Poe Brothers' Mine (Mine Index No. 860) for rail and truck shipment.

As was found in an order issued this day in Docket No. A-1694, a reasonable showing of necessity has been made for the granting of the relief prayed for by petitioner except as to that part of petition requesting reclassification of the coals of Ashmore & Poe Brothers' Mine (Mine Index No. 860) in District No. 9. With respect to the request for the reclassification of the coals of Mine Index No. 860, for rail and truck shipments, it appears that the original petitioner has not set forth sufficient facts to warrant such reclassification without a hearing. It appears, therefore, that an adequate showing of necessity has not been made for the granting of temporary relief in the matter of reclassification of the coals of Mine Index No. 860.

Now, therefore, It is ordered, That the portion of Docket No. A-1694 relating to the reclassification of the coals of Mine Index No. 860 be, and it hereby is severed from the remainder of Docket No. A-1694 and designated as Docket No. A-1694, Part II.

It is further ordered, That the request for temporary relief be, and the same hereby is, denied without prejudice to the renewal of such request for temporary relief, upon further showing or upon the basis of the record to be made at the hearing to be held herein.

It is further ordered, That a hearing in Docket No. A-1694, Part II under the applicable provisions of said Act and the rules and regulations of the Division, be held on January 26, 1943, at 10 o'clock in the forenoon of that day at a hearing room of the Bituminous Coal Division at Washington, D. C. On that day the Chief of the Records Section of the Division will advise as to the room where such hearing will be held.

It is further ordered, That Edward J. Hayes or any other officer or officers of the Division duly designated for that purpose shall preside at the hearing in such matter. The officer so designated to preside at such hearing is hereby authorized to conduct such hearing, to administer oaths and affirmations, examine witnesses, take evidence, to continue said hearing from time to time and to prepare and submit to the Division proposed findings of fact and conclusions and the recommendation of an appropriate order in the premises, and to perform all other duties in connection therewith authorized by law.

Notice of such hearing is hereby given to all parties herein and to persons or entities having an interest in this proceeding and eligible to become a party herein. Any person desiring to be admitted as a party to this proceeding may file a petition of intervention in accordance with the Rules and Regulations of the Bituminous Coal Division for Proceedings Instituted Pursuant to section 4 II (d) of the Act, setting forth the facts on the basis of which relief in the original petition is supported or opposed or on the basis of which other relief is sought. Such petitions of intervention shall be filed with the Bituminous Coal Division on or before January 19, 1943.

All persons are hereby notified that the hearing in the above-entitled matter and any orders entered therein may concern, in addition to the matters specifically alleged in the petition, other matters necessarily incidental and related thereto, which may be raised by amendment to the petition, petitions of intervenors or otherwise, or which may be necessary corrollaries to the relief, if any, granted on the basis of this petition.

The matter concerned herewith is in regard to the petition of District Board No. 9 requesting the reclassification of the coals of the Ashmore & Poe Brothers' Mine (Mine Index No. 860) for rail and truck shipments from the higher No. 6

seam prices to the lower No. 9 seam prices.

Dated: December 2, 1942.

[SEAL] DAN H. WHEELER, *Director.*

[F. R. Doc. 42-12884; Filed, December 4, 1942; 12:02 p. m.]

[Docket No. A-364]

HILLMAN COAL AND COKE COMPANY

ORDER CORRECTING A TYPOGRAPHICAL ERROR

In the matter of the petition of Hillman Coal & Coke Company for a change in the minimum price established for coals of its Naomi Mine located in District No. 2, when sold for delivery all-river in Market Area No. 13, pursuant to section 4 II (d) of the Bituminous Coal Act of 1937.

In an order dated November 4, 1942, 7 F. R. 9091, terminating relief and dismissing petition in the above-entitled matter, the first paragraph reads as follows:

Petitioner having filed an original petition requesting a price of $1.56 per ton for coal from its Naomi Mine, f. a. s. dock of the Ohio Edison Company at Toledo, Ohio, and asking for temporary relief; and

It appears from the record that "Toledo, Ohio," is an error and should read "Toronto, Ohio," and that the order of November 4, 1942, should be corrected accordingly.

Now, therefore, it is ordered, That the first paragraph of said order dated November 4, 1942, be, and the same hereby is, amended to read as follows:

Petitioner having filed an original petition requesting a price of $1.56 per ton for coal from its Naomi Mine, f. a. s. dock of the Ohio Edison Company at Toronto, Ohio, and asking for temporary relief; and

It is further ordered, That in all other respects the order of November 4, 1942, shall remain in full force and effect.

Dated: December 3, 1942.

[SEAL] DAN H. WHEELER, *Director.*

[F. R. Doc. 42-12885; Filed, December 4, 1942; 12:02 p. m.]

[Docket No. C-22]

SEMET-SOLVAY COMPANY

NOTICE OF AND ORDER FOR HEARING

In the matter of the application of Semet-Solvay Company for exemption pursuant to the section 4-A of the Bituminous Coal Act of 1937.

An application for a determination of the status of coal mined at Mine Index Nos. 270 and 5477 in District No. 8 having been filed on October 26, 1942, by the above-named applicant pursuant to the second paragraph of section 4-A of the Bituminous Coal Act of 1937.

It is ordered, That a hearing in the above-entitled matter under the applicable provisions of said Act and the rules of the Division be held on January 12, 1943, at 10 o'clock in the forenoon of that date at a hearing room of the Bituminous Coal Division in Washington, D. C. On such day the Chief of the Records Section in the offices of the Division, Washington, D. C., will advise as to the room where such hearing will be held.

It is further ordered, That Travis Williams, or any other officer or officers of the Division duly designated for that purpose shall preside at the hearing in such matter. The officer so designated to preside at such hearing is hereby authorized to conduct said hearing, to administer oaths and affirmations, examine witnesses, take evidence, to continue said hearing from time to time, and to such places as he may direct by announcement at said hearing or any adjourned hearing or by subsequent notice, and to prepare and submit proposed findings of fact and conclusions and the recommendation of an apropriate order in the premises, and to perform all other duties in connection therewith authorized by law.

Notice of such hearing is hereby given to said applicant and to all other parties herein and to all persons and entities having an interest in these proceedings and eligible to become a party herein. Any person or entity eligible under Section VII (i) of the Rules of Practice and Procedure before the Bituminous Coal Division may file a petition for intervention not later than fifteen (15) days after the date of the issuance of this Notice of and Order for Hearing. Notice is hereby given that:

(1) Within fifteen (15) days from the date of the issuance of this Notice of and Order for Hearing, the applicant and each interested party shall file with the Division a concise statement in writing of the facts expected to be proved by such person at the hearing. Interested parties shall also file a written intervention in compliance with Section VIII of the aforesaid Rules of Practice and Procedure. The statements of facts shall be considered as pleadings and not as evidence of the facts therein stated. The affirmative evidence adduced by a party at the hearing shall be limited to the said statement of facts filed by such party.

(2) If no written statement of the facts expected to be proved at the hearing is filed by the applicant within the 15-day period, in the absence of extenuating circumstances, the application shall be deemed to have been withdrawn on the expiration of said period in accordance with the provisions of Section VII (g) of the aforesaid Rules of Practice and Procedure.

(3) If the applicant does not appear and offer evidence in support of its statement of facts, in the absence of extenuating circumstances the application shall be deemed to have been withdrawn in accordance with the provisions of Section VII (g) of the aforesaid Rules of Practice and Procedure.

(4) The burden of proof in this proceeding shall be on the applicant.

All persons are hereby notified that the hearing in the above-entitled matter and any orders entered therein may concern, in addition to the matters specifically alleged in the application, other matters necessarily incidental and related thereto, which may be raised by amendment to the application, petitions of intervenors or otherwise, or which may be necessary corollaries to the relief if any granted on the basis of this application.

The matter concerned herewith is in regard to the application of Semet-Solvay Company for a determination of the status of coal produced at Mine Index Nos. 270 and 5477 in District No. 8. The said application alleges that a major portion of such coal is exempt from Section 4 of the Act because it is coal produced, transported, and consumed by the applicant within the meaning of section 4 II (1) of the Bituminous Coal Act of 1937. The application further alleges that the remainder of the coal involved is sold to and consumed by its employees at the said mines for household use pursuant to the provisions of an agreement covering the employment and compensation of said employees and that such transactions are in intrastate commerce and do not, as between persons and localities in such commerce on the one hand and interstate commerce in coal on the other hand, result in any undue, unreasonable, or unjust discrimination against interstate commerce in coal or in any manner directly affect interstate commerce in coal pursuant to section 4-A of the Act.

Dated: December 3, 1942.

[SEAL] DAN H. WHEELER, *Director.*

[F. R. Doc. 42-12886; Filed, December 4, 1942; 12:02 p. m.]

[Docket No. 1803-FD]

ALBUQUERQUE AND CERRILLOS COAL CO.

MEMORANDUM OPINION APPROVING AND ADOPTING REPORT AND RECOMMENDATIONS OF THE EXAMINER AND ORDER OF CERTIFICATION

In the matter of Albuquerque and Cerrillos Coal Company, Respondent.

This proceeding is now before me on exceptions and objections of respondent to the report and recommendations of the Examiner. It was originally instituted upon a complaint filed with the Bituminous Coal Division June 9, 1941, by a representative of Local Union No. 6920 of the United Mine Workers of America which alleged that various acts of respondent Albuquerque and Cerrillos Coal Company, were in violation of the provisions of section 9 of the Bituminous Coal Act of 1937. After appropriate notice, a hearing was held November 10, 1941, before a duly designated Examiner of the Division. The Examiner's recommendations were submitted to me July 31, 1942.

The Examiner's proposed findings of fact and recommended legal conclusions are set forth in a document of 66 pages. The Report discusses in great detail the evidence adduced at the hearing—a hearing which lasted from November 10 through November 22, 1941. At that hearing, 63 witnesses testified and exhibits numbered up to 113 were introduced. The record, which I have myself personally examined, comprises 2,480 pages of stenographic transcript.

On the basis of his observation of the witnesses who testified before him, the arguments of counsel which were frequently injected during the testimony, and an analysis of the record, the Examiner found that respondent company, through its officers and agents, is violating the provisions of section 9 (a) (1) and section 9 (a) (2)[1] of the Act, contrary to the public policy of the United States, and recommended that the Division certify such findings to all departments or agencies of the United States having contracts for the purchase of bituminous coal produced by respondent requesting cancellation and termination of such contracts, as required by section 9 (c) of the Act.[2]

The first part of the Examiner's Report discusses the charge that respondent has failed to accord its employees the right to organize and to bargain collectively with respect to their hours of labor, wages, and working conditions through representatives of their own choosing. The Examiner found, after extensive reference to cases decided under analogous federal legislation, that respondent has for a substantial period failed to bargain in good faith with complainant union, a duly accredited representative of the majority of its employees. Although finding that it had held frequent negotiations with union representatives, the Examiner concluded that respondent was indulging only in "surface bargaining" without any conscientious effort to compose differences, reach an agreement, and thus effectuate the Congressional objective of industrial peace. In the second section of his Report, the Examiner concluded that respondent has, in fact, been guilty of restraining, coercing, and interfering with its employees in the free exercise of their rights under the Act. He found a number of instances in which supervisory employees representing respondent's management made statements which have consistently been regarded by the courts as being of a discriminatory and intimidatory character. In addition, the Examiner concluded that respondent was primarily responsible for a mass attack on a union picket-line during a strike at respondent's mines May 15, 1941. In the third section of his Report, the Examiner found that the Madrid Employees' Club, an organization sponsored and encouraged by respondent or its supervisory employees, was not a "company union" as charged in the complaint.

On September 19, 1942, respondent filed a 54 page brief challenging the conclusions of the Examiner and objecting to various statements and interpretations in his Report. I have carefully considered all of respondent's contentions and have reread portions of the record in the light of those contentions. My own investigation leads me, however, to reject all of the exceptions and objections raised and to adopt and affirm the Report of the Examiner as my own considered judgment.

In view of the Examiner's carefully detailed discussion, I do not believe it either necessary or helpful to attempt further exposition of the details of the evidence pertinent to the questions raised by respondent in its brief. It seems sufficient to point out that many of the objections raised[3] before me are simply restatements of arguments presented to and rejected by the Examiner. Others are predicated on respondent's own interpretation of the facts, which frequently differs from the interpretation of the Examiner. While my own interpretation of particular items of evidence in a few cases also differs slightly from that of the Examiner, I believe that there is substantial support in the record for his inferences and conclusions, and whatever differences may exist in our respective judgments as to the emphasis or interpretation to be given individual isolated facts, the entire record fully confirms the ultimate conclusions reached.

Again, other of respondent's arguments are based upon testimony which the Examiner evidently disregarded as unreliable. Because respondent devotes many pages of its brief to calling attention to the statements of its various witnesses with respect to the assault on the Union's picket-line by non-striking workers, it seems advisable to note that in my opinion the Examiner has reasonably, and with commendable restraint, analyzed highly conflicting versions of that regrettable incident and properly concluded that respondent must bear the ultimate responsibility for it. The testimony of the various supervisory employees on this matter, as set forth in the Examiner's Report, seems to me implausible. While there are at least portions of the testimony of witnesses offered by the Union which are open to similar criticism, I believe that in its entirety the record shows that respondent's supervisory employees, with the express or tacit consent of respondent's president, initiated the meeting held the evening before the assault at which they formulated a plan to discourage Union activities on the picket-line; it seems clear that the large number of non-striking employees who gathered the following morning to make "a show of strength" before the far less numerous men, women, and children on the picket line, came prepared to resort to whatever tactics the exigencies of the carefully planned situation might require. Violence was forseeable, if not deliberately intended. The actual outbreak of such violence appears to have been occasioned irrespective of the actions of the strikers.

With respect to evidence of anti-union statements made to individual employees by supervisors or foremen, I likewise approve the Examiner's acceptance of the employees' versions and his rejection of the denials made by the foremen.

In the light of my examination of the record I conclude, as did the Examiner, that the Madrid Employees' Club was established and perpetuated by important officials or employees of respondent for purposes other than collective bargaining, and for this reason is not an organization outlawed by section 9 (a) (2) of the Act.

In short, without specifically enumerating them, I find each and every objection and exception which respondent makes to the Examiner's Report to be either individually groundless or to have no effect upon the ultimate conclusions reached.

Two matters not discussed by the Examiner may be noted briefly. Apparently for the first time, respondent argues before me that section 9 of the Bituminous Coal Act of 1937 is unconstitutional in that it does not provide proper standards for its administration and because it seeks to regulate labor relations between employers and employees in both interstate and intrastate commerce. Bound as I am to administer and enforce all of the provisions of the Bituminous Coal Act of 1937, it would seem inappropriate even to venture an administrative judgment on the constitutionality of the statute. I believe, in any event, that respondent's claims are entirely without foundation. When considered in context, section 9 of the Act is certainly no more vague or indefinite than numerous other statutory provisions whose validity has been sustained. See, for example, *Sproles* v. *Binford*, 286 U. S. 374, 393 (1932); *Hygrade Provision Co.* v. *Sherman*, 266, U. S. 497, 502 (1925); *Virginia Railway Co.* v. *System Federation*, 300 U. S. 515, 547 (1937).[4]

[1] In section 9 (a) of the Act it is declared to be the public policy of the United States that: "(1) Employees of producers of coal shall have the right to organize and to bargain collectively with respect to their hours of labor, wages, and working conditions through representatives of their own choosing, without restraint, coercion, or interference on the part of the producers. (2) No producer shall interfere with, restrain, or coerce employees in the exercise of their said rights, nor discharge or discriminate against any employee for the exercise of such rights."

[2] This subsection provides that "On the complaint of any employee of a producer of coal, or other interested party, the Commission may hold a hearing to determine whether any producer supplying coal for the use of the United States or any agency thereof, is complying with the provisions of subsection (a) of this section. If the Commission shall find that such producer is not complying with such provisions, it shall certify its findings to the department or agency concerned. Such department or agency shall thereupon declare the contract for the supply of the coal of such producer to be canceled and terminated."

[3] In particular, respondent urges in a variety of forms that it was financially unable to meet the demands made on it by the Union representatives and for this reason signed no agreement. But, as the Examiner pointed out at page 53 of his Report, claim of financial embarrassment cannot explain away many of respondent's actions which indicate a lack of willingness to bargain in good faith. Again, respondent's failure to meet its statutory obligations cannot be excused, as the Examiner several times pointed out, by what it claims to have been the inflexible attitude of the Union. In renewing these and similar arguments in its brief, respondent takes little or no cognizance of what I believe to be the cogent and persuasive observations in the Report.

[4] For other instances where claims that power had been delegated without sufficient standards for its exercise were rejected, see *Mutual Film Corporation* v. *Industrial Commission of Ohio*, 236 U. S. 230, 246 (1915); *Mahler* v. *Eby*, 264 U. S. 32, 40–41 (1924); *New York Central Securities Corporation* v. *U. S.*, 237 U. S. 12, 25–29 (1932); *Federal Radio Com-*

Likewise, there is no merit in the suggestion that in enacting section 9, Congress has usurped powers under the commerce clause properly reserved to the States. Section 9 would seem to have the same radius of application as other provisions of the Act. Whether activities are or are not of an interstate character or whether they affect interstate activities is to be determined in each individual case. The fact that in a particular instance, although not the present one, it may be difficult to draw a mathematical line does not create any legal objection to the Act. Compare *Nash* v. *United States* 229 U. S. 373, 377 (1913); *Santa Cruz Fruit Packing Co.* v. *N.L.R.B.*, 303 U. S. 453, 467 (1938).

Respondent also suggests that application of the statute leads "to unreasonable results in that it would be impossible for a producer to ever entirely free himself because of his misguided judgment at any time subsequent to June 1, 1937." Respondent's argument seems to be that because the statute does not specifically and expressly provide machinery whereby a producer whose government contracts have been cancelled and terminated pursuant to action under section 9 can regain eligibility for such contracts, it would be improper to make a finding that the producer has been violating those provisions of section 9 which are expressly declared. It seems sufficient to note that under section 2 (a) of the Act the Division is given power to make and promulgate all reasonable rules and regulations for carrying out the provisions of the Act. At this time there seems little reason to prescribe in detail methods by which respondent may purge itself of its violations of section 9. Should respondent subsequently by petition make appropriate application to the Division for reinstatement in good standing and make adequate showing that it is no longer in violation of section 9, an appropriate order will be entered and the departments and agencies affected will be promptly notified of respondent's renewed eligibility for future government contracts. At the present time, however, the record shows that respondent is violating the provisions of section 9. Under these circumstances, I am bound by the statute to certify my finding of such violations to the agencies or departments concerned.

I shall consequently certify to the affected departments or agencies of the United States the following findings:

(1) Pursuant to a complaint filed by Local Union No. 6920 of the United Mine Workers of America, District No. 15, the Bituminous Coal Division has conducted a proceeding to determine whether or not the Albuquerque and Cerrillos Coal Company of Madrid, New Mexico, a producer of bituminous coal in District No. 18, is complying with the provisions of section 9 (a) of the Bituminous Coal Act of April 26, 1937, (50 Stat. 73, 15 U.S.C. Sec. 828 et seq.).

(2) In accordance with recommendations of a duly designated Examiner of the Division who presided at a hearing held November 10 to November 22, 1941, I have this day found that the Albuquerque and Cerrillos Coal Company is not complying with the provisions of section 9 (a) of the Act and that, contrary to the public policy of the United States, it has failed to accord its employees the right to organize and to bargain collectively with respect to their hours of labor, wages, and working conditions through representatives of their own choosing, without restraint, coercion, or interference on the part of the Albuquerque and Cerrillos Coal Company. Rather, I have found that the Albuquerque and Cerrillos Coal Company has interfered with, restrained, and coerced its employees in the exercise of these rights guaranteed by the Act.

(3) I have also found that the Albuquerque and Cerrillos Coal Company is a producer supplying coal for the use of the United States and various of its agencies.

(4) As Director of the Bituminous Coal Division, United States Department of the Interior, I am required by law to certify these findings to all affected departments or agencies of the United States. Section 9 (c) of the Act provides that "such departments or agencies shall thereupon declare the contract for the supply of the coal of such producer to be canceled and terminated."

Dated December 5, 1942.

[SEAL] DAN H. WHEELER, *Director.*

[F. R. Doc. 42-12948; Filed, December 7, 1942; 11:32 a. m.]

[Docket No. B-345]

BURKHARDT CONSOLIDATED COAL CO.

ORDER CORRECTING ERROR IN NOTICE OF AND ORDER FOR HEARING

In the matter of Burkhardt Consolidated Coal Co., registered distributor, Registration No. 1265.

An error having occurred in Notice of and Order for Hearing dated November 23, 1942, in the above-entitled matter as follows:

In paragraph A(1) of said Notice of and Order for Hearing it is stated that "approximately 21.875 tons of 2" crushed mine run coal" were resold to the Summit County Children's Home, Akron, Ohio, whereas this coal was in fact resold to the Akron Pure Milk Company, Akron, Ohio.

Now, therefore, it is ordered, That the Notice of and Order for Hearing, dated November 23, 1942, in the above-entitled matter, be and it hereby is corrected accordingly by inserting in paragraph A (1) thereof "to Akron Pure Milk Company, Akron, Ohio" immediately preceding said "approximately 21.875 tons of 2" crushed mine run coal."

Dated: December 4, 1942.

[SEAL] DAN H. WHEELER, *Director.*

[F. R. Doc. 42-12947; Filed, December 7, 1942; 11:32 a. m.]

[Docket No. B-44]

J. O. PITCHER COAL CO.

ORDER WITHDRAWING NOTICE OF AND ORDER FOR HEARING, CANCELLING HEARING, AND TERMINATING MATTER WITHOUT PREJUDICE

In the matter of J. O. Pitcher Coal Company, registered distributor, Registration No. 7341, respondent.

The above-entitled matter having been instituted by a Notice of and Order for Hearing dated October 24, 1941, and an answer having been filed herein by said respondent on December 1, 1941, in which it was stated that the discounts in excess of the maximum allowable discounts referred to in said notice were accepted by the Distributor as a result of an honest mistake and have been returned to the producer; and

The hearing having been postponed by Order of the Acting Director dated December 4, 1941, to a date and place to be thereafter designated by an appropriate order; and

The Director, upon the basis of said answer, and other information in the possession of the Division, being of the opinion that said Notice of and Order for Hearing should be withdrawn, that the said hearing should be cancelled and that the above-entitled matter should be terminated without prejudice;

Now, therefore, it is ordered, That the said Notice of and Order for Hearing dated October 24, 1941, be and the same hereby is withdrawn; and

It is further ordered, That the hearing heretofore scheduled in the above-entitled matter be and the same hereby is cancelled; and

It is further ordered, That the above-entitled matter be and the same hereby is terminated without prejudice.

Dated: December 4, 1942.

[SEAL] DAN H. WHEELER, *Director.*

[F. R. Doc. 42-12946; Filed, December 7, 1942; 11:32 a. m.]

FEDERAL COMMUNICATIONS COMMISSION.

ORDER REQUESTING CERTAIN INFORMATION

To all radio station licensees:

Pursuant to a recommendation of the Board of War Communications, the Federal Communications Commission requests each licensee to submit immediately the information called for in the attached form.[1] Upon receipt of this information from all stations, it is expected that the Commission in cooperation with the War Production Board will work out a plan for the voluntary redistribution of surplus and salvageable radio equipment.

The purpose of this program is to supply to all radio licensees, as well as to government war agencies and others interested, information relative to the availability of surplus or salvageable material. It is anticipated that this will permit some stations to continue uninterrupted operation which might otherwise be forced to remain silent for

---

mission v. *Nelson Brothers Bond & Mortgage Co.*, 289 U. S. 266, 285 (1933); *Frischer & Co.* v. *Elting*, 60 F. (2d) 711, 713-714 (C. C. A. 2, 1932), cert. denied 287 U. S. 649.

temporary periods, and at the same time will not require the use of materials and manufacturing facilities urgently needed for essential war purposes. This will also permit stations to dispose of equipment which is of no use to them.

Selling prices should not be quoted. It is understood that the listing of the information sought does not necessarily constitute an offer to sell. However, items which the station is willing to sell should be indicated by an asterisk. This is merely a means of making the information available to interested parties.

In completing the questionnaire it is requested that even though the item listed is a unit of standard manufacture, that adequate description be given to properly identify it both as to its general nature and as to its characteristics such as size, power, frequency range, emission, resistance, capacitance, scale, etc. Information relative to condition of equipment should be specific in all cases, and if the categories mentioned are inadequate or not applicable, further explanation should be given.

Junk, scrap or equipment which cannot be repaired should not be listed. However, these should be otherwise disposed of in the interest of the war effort. Transmitters which are presently licensed (including those for which a construction permit is outstanding) or which are registered under Order 99 should not be listed. The normal spares to the licensed equipment should not be listed; all other equipment should be.

The returned questionnaires will be analyzed, cataloged by items of equipment and distributed as a Federal publication. In order that this program may be effective the information must be current. Therefore, when material listed is no longer available or when additional material becomes available, the Commission should be so advised immediately.

The questionnaire should be completed and returned not later than December 10, 1942, to the Federal Communications Commission, Engineering Department, Surplus Equipment Section, Washington, D. C.

[SEAL] T. J. SLOWIE, *Secretary.*

NOVEMBER 20, 1942.

[F. R. Doc. 42-12938; Filed, December 5, 1942; 11:43 a. m.]

OFFICE OF DEFENSE TRANSPORTATION.

[Special Order ODT B-33]

BALCER BROTHERS MOTOR COACH COMPANY, INC., AND HURON SHORE BUS LINE

COORDINATED OPERATION BETWEEN BAY CITY-ALPENA, MICHIGAN

Upon consideration of the application for authority to coordinate motor vehicle service in the transportation of passengers filed with the Office of Defense Transportation by Balcer Brothers Motor Coach Company, Inc., a corporation, Bay City, Michigan, and Albert Rivet, doing business as Huron Shore Bus Line, Alpena, Michigan, pursuant to § 501.49 of General Order ODT 11 [7 F.R. 4389], and in order to assure maximum utilization of the facilities, services, and equipment of common carriers of passengers by motor vehicle, and to conserve and providently utilize vital equipment, material, and supplies, including rubber, the attainment of which purposes is essential to the successful prosecution of the war, *It is hereby ordered,* That:

1. Balcer Brothers Motor Coach Company, Inc., a corporation, shall operate a through service of not to exceed two round trips daily between Bay City and East Tawas, Michigan. Albert Rivet shall operate a through service of not to exceed two round trips daily between East Tawas and Alpena, Michigan. Such service shall make direct connections at East Tawas so as to provide a coordinated through intrastate service.

2. Balcer Brothers Motor Coach Company, Inc., a corporation, shall not extend or inaugurate service between East Tawas and Alpena, Michigan. Albert Rivet shall suspend service between East Tawas and Bay City, Michigan, and forthwith shall file with the Michigan Public Service Commission a notice describing the operations to be suspended in compliance herewith.

3. The carriers forthwith shall file with the Interstate Commerce Commission in respect of transportation in interstate or foreign commerce, and with the Michigan Public Service Commission in respect of transportation in intrastate commerce, and publish in accordance with law, and continue in effect until further order, tariffs or appropriate supplements to filed tariffs, setting forth any changes in fares, charges, operations, rules, regulations, and practices of each carrier which may be necessary to accord with the provisions of this order, together with a copy of this order; and forthwith shall apply to said commissions for special permission for such tariffs or supplements to become effective on one day's notice.

4. The provisions of this order shall not be so construed or applied as to require or permit either carrier to perform any transportation service, the performance of which by it is not authorized or sanctioned by law.

5. Communications concerning this order should be addressed to the Division of Local Transport, Office of Defense Transportation, Washington, D. C., and should refer to "Special Order ODT B-33".

This Special Order ODT B-33 shall become effective December 17th, 1942, and shall remain in full force and effect until the termination of the present war shall have been duly proclaimed, or until such earlier time as the Office of Defense Transportation by further order may designate.

Issued at Washington, D. C., this 7th day of December, 1942.

JOSEPH B. EASTMAN, *Director of Defense Transportation.*

[F. R. Doc. 42-12945; Filed, December 7, 1942; 11:21 a. m.]

[1] Form filed as part of the original document.

OFFICE OF PRICE ADMINISTRATION.

[Order 3 Under MPR 136]

BITCO, INCORPORATED

ORDER ADJUSTING MAXIMUM PRICES

Order No. 3 Under § 1390.25 (a) of Maximum Price Regulation No. 136, as Amended—Machines and Parts and Machinery Services.

Adjustment of maximum prices for machinery services performed by Bitco, Incorporated.

For the reasons set forth in an opinion issued simultaneously herewith and filed with the Division of the Federal Register, and pursuant to and under the authority vested in the Price Administrator by the Emergency Price Control Act of 1942, as amended, and Executive Order No. 9250 and § 1390.25 (a) of Maximum Price Regulation No. 136, as amended, *It is hereby ordered,* That:

(a) The maximum price to any purchaser for any machinery service performed by Bitco, Incorporated, on bits and drill rods shall be determined in accordance with § 1390.9 of Maximum Price Regulation No. 136, as amended, except that there may be added to such maximum price the amount of the additional direct labor cost of performing such service resulting from an increase in wage rates authorized by the War Labor Board on November 10, 1942 in Case No. BWA 251: *Provided,* That all prices increased pursuant to this Order are filed with the Office of Price Administration, Washington, D. C., within ten days after they have been computed, together with a detailed explanation of the manner in which they were computed.

(b) This Order No. 3 may be revoked or amended by the Office of Price Administration at any time.

(c) This Order No. 3, under § 1390.25 (a) of Maximum Price Regulation No. 136, as amended, shall become effective December 4, 1942.

(Pub. Laws 421 and 729, 77th Cong.; E.O. 9250, 7 F.R. 7871)

Issued this 4th day of December 1942.

LEON HENDERSON, *Administrator.*

[F. R. Doc. 42-12906; Filed, December 4, 1942; 4:50 p. m.]

[Order 49 Under MPR 188]

GAME MAKERS, INC.

APPROVAL OF A MAXIMUM PRICE

Correction

In paragraph (a) of Order 49 under Maximum Price Regulation 188 appearing on page 9402 in the issue for Saturday, November 14, 1942, the price quoted should be $21.60 instead of $26.20.

[Suspension Order 174]

ARAM J. LA PIERRE

ORDER RESTRICTING TRANSACTIONS

Aram J. LaPierre, doing business as LaPierre Auto Supply Company, 149-151 Cumberland Street, Woonsocket, Rhode Island, hereinafter called respondent,

was duly served with a notice of specific charges of violations of Revised Tire Rationing Regulations and of Ration Order No. 5A, Gasoline Rationing Regulations, issued by the Office of Price Administration. Pursuant to the notice a hearing was held on October 14, 1942, in Providence, Rhode Island. There appeared a representative of the Office of Price Administration and respondent. The evidence pertaining to the charges was presented before an authorized presiding officer. The matter having been considered by the Deputy Administrator in Charge of Rationing, it is hereby determined that:

(a) Respondent is a dealer in gasoline and operates a filling station and auto supply store known as LaPierre Auto Supply Company, at 149–151 Cumberland Street, Woonsocket, Rhode Island.

(b) Respondent has violated Ration Order No. 5A, Gasoline Rationing Regulations, (§ 1394.1502), in that on numerous occasions between July 22 and September 21, 1942, respondent transferred gasoline to consumers in exchange for coupons Class A, No. 2 and on numerous occasions between September 22 and October 6, 1942, respondent transferred gasoline to consumers in exchange for Class A, No. 3 coupons.

(c) Respondent has violated Ration Order No. 5A, Gasoline Rationing Regulations, (§ 1394.1503), in that on numerous occasions between August 9 and September 22, 1942, respondent transferred gasoline to a consumer, Roland Joseph Allard, and into the fuel tank of his motor vehicle in exchange for coupons from a coupon book that was not issued for and did not bear the identification of the vehicle into which the transfers were made.

(d) Respondent has violated Revised Tire Rationing Regulations (§ 1315.401), in that on July 25, 1942, respondent transferred three (3) new tires and two (2) new tubes without receiving in exchange therefor any certificate issued by a War Price and Rationing Board, authorizing such transfers. Such transfers were not within any of the classes of transfers of tires permitted by the provisions of the Revised Tire Rationing Regulations to be made without the exchange of certificates or portions of certificates.

(e) Respondent has violated Revised Tire Rationing Regulations (§ 1315.1003), in that between February 28 and October 1, 1942, he failed to take any inventory of the new tires and tubes in his possession and failed to file any quarterly reports.

Because of the great scarcity and critical importance of gasoline and rubber in Rhode Island, violations of the Gasoline Rationing Regulations and the Tire Rationing Regulations have necessarily resulted in the diversion of gasoline and rubber from military and essential civilian uses into nonessential uses in a manner contrary to the public interest and detrimental to the national war effort. It appears to the Deputy Administrator in Charge of Rationing from the evidence before him that further violations of the Gasoline Rationing Regulations and the Tire Rationing Regulations by respondent are likely unless appropriate administrative action is taken, *It is therefore ordered:*

(f) That during the period from 12:01 A. M. December 10, 1942, to 12:01 A. M. February 7, 1943,

(1) Respondent shall not accept any deliveries or transfers of, or in any manner directly or indirectly receive from any source any gasoline for resale.

(2) Respondent shall not transfer or deliver or otherwise trade or deal in gasoline.

(3) No person shall in any manner, directly or indirectly, transfer or deliver any gasoline to respondent for resale.

It is further ordered:

(g) That during the period from December 10, 1942, to December 31, 1944, unless otherwise ordered by the Deputy Administrator in Charge of Rationing,

(1) Respondent shall not accept any transfers or deliveries of, or in any manner directly or indirectly receive from any source any new or used tires or tubes, recapped tires, or retreaded tires for resale.

(2) No person shall in any manner, directly or indirectly, transfer or deliver any new or used tires or tubes, recapped tires or retreaded tires to respondent for resale.

(3) Respondent shall not directly or indirectly transfer, or otherwise deal or trade in new or used tires or tubes, recapped tires or retreaded tires: *Provided, however,* That respondent may make transfers of his stocks thereof in his possession at the time this Suspension Order No. 174 is served upon him, with the prior approval and under the supervision of the Regional Administrator of the Office of Price Administration for Region I.

(h) Any term used in this Suspension Order No. 174 that is defined in the Revised Tire Rationing Regulations or in Ration Order No. 5A, Gasoline Rationing Regulations, shall have the meaning therein given it.

(Pub. Law 421, 77th Cong.; Sec. 2 (a) of Pub. Law 671, 76th Cong.; as amended by Pub. Laws 89 and 507, 77th Cong.; E.O. No. 9125 (7 F.R. 2719); WPB Directive No. 1 (7 F.R. 562) and Supplementary Directive No. 1Q (7 F.R. 9121))

Issued and effective this 5th day of December 1942.

PAUL M. O'LEARY,
Deputy Administrator in Charge of Rationing.

[F. R. Doc. 42-12916; Filed, December 5, 1942; 11:27 a. m.]

[Suspension Order 177]

BENJAMIN COHEN AND SAMUEL LA POUCHE

ORDER RESTRICTING TRANSACTIONS

Benjamin Cohen and Samuel La Pouche, doing business as Supreme Mineral Water Company and Liberty Club Beverages, 69 Bath Street, Providence, Rhode Island, hereinafter called respondents, were duly served with a notice of specific charges of violations of Ration Order No. 3, Sugar Rationing Regulations, issued by the Office of Price Administration. Pursuant to the notice, a hearing was held on October 15, 1942, in Providence, Rhode Island. There appeared a representative of the Office of Price Administration and respondents. The evidence pertaining to the charges was presented before an authorized presiding officer. The matter having been duly considered by the Deputy Administrator in Charge of Rationing, it is hereby determined that:

(a) Respondents use sugar in their business of manufacturing bottled beverages and soda waters for sale at wholesale.

(b) Respondents have violated § 1407.82 of Rationing Order No. 3, Sugar Rationing Regulations, in that on August 3, 1942, respondents accepted delivery of 10,000 pounds of sugar without surrendering any sugar purchase certificate therefor until August 7, 1942; such delivery was not within the class of deliveries of sugar permitted by Ration Order No. 3 to be made without the surrender of a sugar purchase certificate at or before the time of delivery of such sugar.

Because of the great scarcity and critical importance of sugar in the United States, respondents' violations of the Sugar Rationing Regulations have resulted in the diversion of sugar from military and essential civilian uses to nonessential uses in a manner contrary to the public interest and detrimental to the national war effort. It appears to the Deputy Administrator in Charge of Rationing that further violations of the Sugar Rationing Regulations by respondent are likely unless appropriate administrative action is taken. *It is therefore ordered:*

(c) That the total allotment of sugar which respondents would otherwise be entitled to receive and use during the period commencing January 1, 1942, and ending February 28, 1942, shall be reduced by 10,000 pounds.

(d) Any terms used in this Suspension Order No. 177 that are defined in Rationing Order No. 3, Sugar Rationing Regulations, shall have the meaning therein given them.

(Pub. Law 421, 77th Cong.; Sec. 2 (a) of Pub. Law 671, 76th Cong., as amended by Pub. Laws 89 and 507, 77th Cong.; E.O. 9125 (7 F.R. 2719); W.P.B. Directive No. 1 (7 F.R. 562) and Supplementary Directive No. 1E (7 F.R. 2965)

Issued and effective this 5th day of December 1942.

PAUL M. O'LEARY,
Deputy Administrator in Charge of Rationing.

[F. R. Doc. 42-12917; Filed, December 5, 1942; 11:27 a. m.]

ESSEX RUBBER CO.

ORDER REQUIRING THE FILING OF CERTAIN INFORMATION

A statement of the reasons for the issuance of this order has been issued simultaneously herewith and filed with the Division of the Federal Register.

Pursuant to the authority vested in the Price Administrator by section 202

of the Emergency Price Control Act of 1942, as amended, *It is hereby ordered that:*

(a) Essex Rubber Company shall file with the Office of Price Administration in Washington, D. C., the following information, not later than December 19, 1942, with regard to each grade and quality of reclaimed rubber either in production between February 15, 1942, and the effective date of this order or in inventory on the effective date of this order, and within 15 days after starting production or inventory with regard to each grade and quality of reclaimed rubber not in production between February 15 and the effective date of this order and not in inventory on the effective date of this order:

(1) Stock number;

(2) Trade name;

(3) Grades of scrap rubber used in production;

(4) Specifications of reclaimed rubber, including rubber hydrocarbon content, specific gravity, and color;

(5) Selling prices for all sales of all grades and qualities of reclaimed rubber which were not sold by Essex Rubber Company during the period between November 5, 1941 and December 5, 1941, and for which no list price or quoted price was in effect during that period.

(b) *Effective date.* This order requiring the filing of certain information by specified rubber manufacturers shall become effective December 5, 1942.

(Pub. Laws 421 and 729, 77th Cong.; E.O. 9250, 7 F.R. 7871)

Issued this 5th day of December 1942.

LEON HENDERSON,
Administrator.

[F. R. Doc. 42-12915; Filed, December 5, 1942; 11:26 a. m.]

[Order 2 Under MPR 189]

BAKER-WHITELEY COAL COMPANY

ORDER GRANTING ADJUSTMENT

Order No. 2 Under Maximum Price Regulation No. 189—Bituminous Coal Sold for Direct Use as Bunker Fuel—Docket No. 3189-1.

For the reasons set forth in an opinion issued simultaneously herewith and pursuant to the authority vested in the Administrator by the Emergency Price Control Act of 1942, as amended, and Executive Order No. 9250, and in accordance with § 1340.307 (a) (2) of Maximum Price Regulation No. 189, *It is ordered:*

(a) The Baker-Whiteley Coal Company, Baltimore, Maryland, may sell and deliver, and any person may buy and receive bituminous coal described in paragraph (b) at prices not in excess of those stated therein, for bunker fuel use.

(b) Run-of-mine (Size Group 3) coals produced by The Berwind-White Coal Mining Company at its Eureka Mines Nos. 35, 37, 40 and Maryland Shaft Mine (Mine Index Nos. 155, 158, 160, and 312, respectively), in District No. 1 may be resold by the said Baker-Whiteley Coal Company for bunker fuel use in Baltimore harbor, at a price from bins not in excess of $5.95 per net ton to regular customers and not in excess of $6.05 per net ton to spot customers.

(c) Within thirty (30) days from the effective date of this Order, said Baker-Whiteley Coal Company shall notify all persons purchasing its coals of the adjustments granted by this order.

(d) This Order No. 2 may be revoked or amended by the Price Administrator at any time.

(e) Unless the context otherwise requires, the definitions set forth in Section 1340.308 of Maximum Price Regulation No. 189 shall apply to terms used herein.

(f) This Order No. 2 shall become effective December 5, 1942.

Issued this 5th day of December 1942.

LEON HENDERSON,
Administrator.

[F. R. Doc. 42-12935; Filed, December 5, 1942; 12:06 p. m.]

SECURITIES AND EXCHANGE COMMISSION.

[File No. 1-2904]

TRANSAMERICA CORPORATION

ORDER FOR HEARING

At a regular session of the Securities and Exchange Commission held at its offices in the City of Philadelphia, Pa., on the 3d day of December, A. D. 1942.

In the matter of Proceeding under section 19 (a) (2) of the Securities Exchange Act of 1934, as amended, to determine whether the registration of Transamerica Corporation, capital stock, $2 par value should be suspended or withdrawn.

The Commission having issued an order under section 19 (a) (2) of the Securities Exchange Act of 1934, as amended, directing that a hearing be held to determine whether Transamerica Corporation had violated sections 12 (b) and 13 (a) and (b) of the Securities Exchange Act of 1934, and the rules, regulations and forms promulgated thereunder, in its application for registration on certain national stock exchanges of 11,590,784 shares of its capital stock, $2 par value, and in its annual report on Form 24-K for the fiscal year ending December 31, 1937; and, if so, whether it was necessary or appropriate for the protection of investors to suspend, for a period not exceeding twelve months, or to withdraw such registration; and

The hearing pursuant to said order having been duly convened on January 16, 1939, and having been continued and adjourned from time to time thereafter;

It is ordered, That the hearing in this proceeding shall be reconvened on January 18, 1943, at 10:00 o'clock, A. M., in Room 1301, of the Commission's regional offices, at 625 Market Street, San Francisco, California, and shall be conducted before Henry Fitts, an officer of the Commission, and that said officer shall enjoy and exercise the same powers as conferred upon him by the original order in this matter issued November 22, 1938, and that the said hearing shall continue thereafter at such times and places as said officer may designate.

By the Commission.

[SEAL] ORVAL L. DUBOIS,
Secretary.

[F. R. Doc. 42-12902; Filed, December 4, 1942; 2:48 p. m.]

[File No. 70-637]

ASSOCIATED GAS AND ELECTRIC COMPANY, ET AL.

NOTICE REGARDING FILING

At a regular session of the Securities and Exchange Commission, held at its office in the City of Philadelphia, Pa., on the 3rd day of December, 1942.

In the matter of Denis J. Driscoll and Willard L. Thorp, Trustees, Associated Gas and Electric Corporation, the General Utilities Company, The Western Reserve Power and Light Company and The New London Power Company.

Notice is hereby given that a joint declaration has been filed with this Commission pursuant to the Public Utility Holding Company Act of 1935 by Denis J. Driscoll and Willard L. Thorp, Trustees of Associated Gas and Electric Corporation ("Agecorp"), a registered holding company, and by The General Utilities Company ("General"), The Western Reserve Power and Light Company ("Western") and The New London Power Company ("New London"), each of which is a subsidiary of Agecorp; and

Notice is further given that any interested person may, not later than December 17, 1942, at 5:30 p. m., E. W. T. request the Commission in writing that a hearing be held on such matter, stating the reasons for such request and the nature of such interest, or may request that he be notified if the Commission should order a hearing thereon. At any time thereafter, such application, as filed or as amended, may be granted, as provided in Rule U-23 of the Rules and Regulations promulgated pursuant to said Act. Any such request should be addressed: Secretary, Securities and Exchange Commission, 18th and Locust Streets, Philadelphia, Pennsylvania.

All interested persons are referred to the said declaration, which is on file in the office of the said Commission, for a statement of the transaction therein proposed, which is summarized below:

Agecorp proposes to enter into an agreement concerning the sale of the properties of General, Western, and New London, for an aggregate base price of $1,000,000 to several purchasers. The several purchasers and the amounts they are to pay for their respective purchases are set forth as follows:

	Base purchase price
Western's property:	
Holmes Rural Electric Cooperative, Inc.	$84,625.67
Lorain-Medina Rural Electric Cooperative, Inc.	309,229.30
Village of Lodi	146,739.37
General's property:	
Hancock-Wood Electric Cooperative, Inc.	166,843.27
Paulding-Putnam Electric Cooperative, Inc.	85,093.45
North-Central Electric Cooperative, Inc.	23,475.44

	Base purchase price
General's property—Continued.	
Tricounty Rural Electric Cooperative, Inc	$96,416.96
Midwest Electric, Inc	47,370.08
New London's property:	
Firelands Electric Cooperative, Inc	170,201.46
Total Base Purchase Price	$1,000,000.00

The declaration contemplates that upon the completion of the sale of their respective properties:

(1) New London will transfer its assets (subject to existing liabilities) to Western, in consideration for the surrender by Western to New London of all the outstanding stock of New London (which is now held by Western);

(2) Western and General will transfer their then remaining assets, mainly the considerations to be received (subject to existing liabilities), to Agecorp upon the surrender to them respectively of all the outstanding stock and claims against them; and

(3) The dissolutions of New London, Western and General, respectively, will be completed.

Sections 12 (c), 12 (d), and 12 (f) have been indicated as the applicable provisions of the Act, under which the filing is made.

By the Commission.

[SEAL] ORVAL L. DUBOIS, *Secretary.*

[F. R. Doc. 42-12898; Filed, December 4, 1942; 2:48 p. m.]

[File No. 43-139]

OKLAHOMA POWER AND WATER COMPANY AND THE MIDDLE WEST CORPORATION

NOTICE REGARDING FILING

At a regular session of the Securities and Exchange Commission, held at its office in the City of Philadelphia, Penna., on the 3rd day of December, A. D. 1942.

Notice is hereby given that a declaration or application (or both) has been filed with this Commission pursuant to the Public Utility Holding Company Act of 1935 by the above-named parties; and

Notice is further given that any interested person may, not later than December 21, 1942, at 5:30 P. M., E. W. T., request the Commission in writing that a hearing be held on such matter, stating the reasons for such request and the nature of his interest, or may request that he be notified if the Commission should order a hearing thereon. At any time thereafter such declaration or application, as filed or as amended, may become effective or may be granted, as provided in Rule U-23 of the Rules and Regulations promulgated pursuant to said Act, or the Commission may exempt such transactions as provided in Rules U-20 (a) and U-100 thereof. Any such request should be addressed: Secretary, Securities and Exchange Commission, Philadelphia, Pennsylvania.

All interested persons are referred to said declaration or application, which is on file in the office of said Commission, for a statement of the transactions therein proposed, which are summarized below:

Oklahoma Power and Water Company proposes, on or prior to December 28, 1942, to pay out of earned surplus $79,875 in dividends, being three quarterly dividends on 17,750 outstanding shares of its 6% preferred stock, all of which shares are owned by The Middle West Corporation, and the company has applied for such authority in view of a provision contained in a previous order of the Commission entered under date of May 29, 1942 restricting the company from declaring or paying dividends on any class of its stock without application to and further order of the Commission. The payment of the proposed dividend will pay in full all arrears of dividends on outstanding shares of preferred stock of the company. The Middle West Corporation has joined in the application or declaration and agrees and proposes, upon payment of such dividend arrears in said sum of $79,875, to make capital contributions aggregating $85,000 to Oklahoma Power and Water Company, $50,000 thereof in December 1942, and $35,000 thereof in January 1943, with the further condition that the entire sum so contributed shall be applied to payment of indebtedness of Oklahoma Power and Water Company.

By the Commission.

[SEAL] ORVAL L. DUBOIS, *Secretary.*

[F. R. Doc. 42-12899; Filed, December 4, 1942; 2:48 p. m.]

[File No. 70-633]

LONE STAR GAS CORPORATION

NOTICE OF FILING AND ORDER FOR HEARING

At a regular session of the Securities and Exchange Commission held at its office in the City of Philadelphia, Pa. on the 2d day of December, A. D. 1942.

Notice is hereby given that a declaration has been filed with this Commission pursuant to the Public Utility Holding Company Act of 1935 by the Lone Star Gas Corporation, a registered holding company. The declarant has designated section 12 (d) of the Act and Rule U-44 of the Rules and Regulations promulgated thereunder as applicable to the transactions proposed. All interested persons are referred to said document which is on file in the office of this Commission for a statement of such proposed transactions which are summarized as follows:

As part of a Plan of Reorganization designed to comply with the requirements of section 11 (b) (1) of the Public Utility Holding Company Act of 1935 and as a step to comply with this Commission's order approving the Plan and requiring divestment of the properties or securities of Council Bluffs Gas Company (Holding Company Act Release No. 3865), the declarant proposes to sell all of the outstanding securities of Council Bluffs Gas Company, a gas company operating in Council Bluffs, Iowa to Raymond A. Smith of Council Bluffs, Iowa, the nominee of John Nuveen, Jr., of Kenilworth, Illinois. These securities consist of 13,500 shares of common stock, having a par value of $100 each, and a note with an unpaid principal balance at October 31, 1942 of $1,000,000 bearing interest at 4½% per annum. The price to be paid for such securities is $1,325,000 in cash, subject to adjustments based upon excess of current assets over current liabilities reflected on the balance sheet of the Council Bluffs Gas Company at October 31, 1942, which is estimated to be $6,500. Declarant proposes to apply the cash proceeds of said sale toward the payment of certain outstanding indebtedness of the Lone Star Gas Corporation.

The declarant states that Raymond A. Smith, nominee of John Nuveen, Jr., has represented to it that the City of Council Bluffs, Iowa will hold a special election on December 9, 1942 for the purpose of submitting to its voters, among other issues, the question of whether the city shall purchase the properties of the Council Bluffs Gas Company. Smith represents that in the event the city election carries in favor of purchasing such properties, Smith and John Nuveen, Jr., will sell them to the city, pursuant to the terms of a proposal made to the city by one Guy C. Myers, fiscal agent of the city for this purpose, receiving in exchange therefor 3% gas revenue bonds of the city delivered at par in the amount of the purchase price paid by Smith and Nuveen, Jr., to Lone Star Gas Corporation. Smith further represents that if the City of Council Bluffs does not purchase the aforesaid properties, Council Bluffs Gas Company will continue to own and operate them and that the securities of the said company will be owned by Raymond A. Smith or his principal, John Nuveen, Jr.

It appearing to the Commission that it is appropriate and in the public interest and the interest of investors and consumers that a hearing be held with respect to said matters, that said declaration shall not become effective except pursuant to further order of this Commission;

It is ordered, That a hearing on such matters under the applicable provisions of said Act and rules of the Commission thereunder be held on December 15, 1942, at 10:00 a. m., E. W. T., at the offices of the Securities and Exchange Commission, 18th and Locust Streets, Philadelphia, Pa., in such room as may be designated on such date by the hearing room clerk. At such hearing cause shall be shown why such declaration shall become effective. Notice is hereby given of said hearing to the above-named declarant and to all interested persons, said notice to be given to said declarant by registered mail and to all other persons by publication in the FEDERAL REGISTER.

It is further ordered, That any person desiring to be heard in connection with the proceedings or proposing to intervene herein shall file with the Secretary of the Commission on or before December 10, 1942, his request or application therefor as provided by Rule XVII of the Rules of Practice of this Commission.

It is further ordered, That Robert P. Reeder or any other officer or officers of the Commission designated by it for that purpose shall preside at the hearing above mentioned. The officer so designated to preside at such hearing is hereby authorized to exercise all powers granted to the Commission under section

18 (c) of the Act and to a Trial Examiner under the Commission's Rules of Practice.

It is further ordered, That without limiting the scope of the issues presented by said declaration to be considered in this proceeding, particular attention will be directed at the hearing to the following matters and questions:

1. Whether the consideration to be received by Lone Star Gas Corporation with respect to the securities of the Council Bluffs Gas Company is unfair or unreasonable;

2. What terms and conditions, if any, are necessary to be imposed to insure compliance with the requirements of the Public Utility Holding Company Act of 1935 or any rules, regulations, or orders promulgated thereunder;

3. Whether, and to what extent, the property account of Council Bluffs Gas Company contains any inflationary items, intangibles, or abandoned property, which should be eliminated prior to disposition by Lone Star Gas Corporation, and what steps, if any, should be taken to effect any such elimination.

4. Generally, whether all actions proposed to be taken comply with the requirements of said Act and Rules and Regulations or orders promulgated thereunder.

By the Commission.

[SEAL] ORVAL L. DUBOIS, *Secretary.*

[F. R. Doc. 42-12901; Filed, December 4, 1942; 2:48 p. m.]

[File No. 59-39]

NORTH AMERICAN LIGHT AND POWER COMPANY AND THE NORTH AMERICAN COMPANY

NOTICE OF FILING, ETC.

At a regular session of the Securities and Exchange Commission, held at its office in the City of Philadelphia, Pa., on the 2d day of December, A. D. 1942.

In the matter of North American Light & Power Company, Holding-Company System and The North American Company.

Notice of filing of petition for extension of time pursant to section 11 (c) and order for hearing.

The Commission having entered its order herein on December 30, 1941, pursuant to sectiol 11 (b) (2) of the Public Utility Holding Company Act of 1935 directing that North American Light & Power Company shall be liquidated and its existence terminated, and further directing that North American Light & Power Company and The North American Company shall proceed with due diligence to submit to this Commission a plan or plans for the prompt liquidation of North American Light & Power Company in a manner consistent with the provisions of said Act;

Notice is hereby given that on November 30, 1942, North American Light & Power Company filed a petition requesting the entry of an order by this Commission under section 11 (c) of the Act extending for one year the time for compliance with the order of December 30, 1941, above described.

All interested persons are referred to said petition which is on file in the office of the Commission for full details concerning the petition.

It appearing to the Commission that it is appropriate in the public interest and in the interest of investors and consumers that a hearing be held for the purpose of considering said petition and for other purposes;

It is ordered, That the hearing in this proceeding shall be held at the office of the Securities and Exchange Commission, 18th and Locust Streets, Philadelphia, Pennsylvania, at 10:00 o'clock A. M. on the 11th day of December 1942, in such room as may be designated on such date by the Hearing Room Clerk.

All persons desiring to be heard or otherwise wishing to participate in the hearing, should notify the Commission in the manner provided by the Commission's Rules of Practice, Rule XVII on or before December 10th, 1942.

At said hearing there will be considered (1) whether North American Light & Power Company has exercised due diligence in its efforts to comply with the Commission's order of December 30, 1941, and whether an extension of time for compliance with said order is necessary or appropriate in the public interest or for the protection of investors or consumers, (2) whether it is necessary or appropriate for the Commission to apply to a court in accordance with section 11 (d) of said Act to enforce compliance with its said order of December 30, 1941, and (3) whether the above-described petition should be granted.

It is further ordered, That William W. Swift or any other officer or officers of the Commission designated by it for that purpose shall preside at the hearing above ordered. The officer so designated to preside at such hearing is hereby authorized to exercise all powers granted to the Commission under section 18 (c) of the Act and to a trial examiner under the Commission's Rules of Practice.

It is further ordered, That the Secretary of this Commission shall serve notice of this order by mailing a copy thereof by registered mail to North American Light & Power Company and The North American Company and that notice shall be given to all other persons by publication thereof in the FEDERAL REGISTER.

By the Commission.

[SEAL] ORVAL L. DUBOIS, *Secretary.*

[F. R. Doc. 42-12900; Filed, December 4, 1942; 2:48 p. m.]

[File No. 54-32]

NORTH SHORE GAS COMPANY, ET AL.

ORDER WITH RESPECT TO PAYMENT OF FEES AND EXPENSES

At a regular session of the Securities and Exchange Commission held at its office in the City of Philadelphia, Pa., on the 3d day of December, A. D. 1942.

In the matter of North Shore Gas Company, North Shore Coke & Chemical Company and North Continent Utilities Corporation.

North Continent Utilities Corporation, a registered holding company, and North Shore Gas Company and North Shore Coke & Chemical Company, subsidiaries of North Continent Utilities Corporation, having filed applications and declarations under section 11 (e) and other applicable sections of the Public Utility Holding Company Act of 1935, with respect to a plan of reorganization for the North Shore Gas Company and North Shore Coke & Chemical Company;

The Commission having entered an order on November 13, 1941, approving, with certain conditions and reservations, the said plan of reorganization, but reserving jurisdiction with respect to the payment of fees and expenses incurred or to be incurred in connection with the plan, and directing that the applicants file with the Commission a notification and itemized statement of such fees and expenses;

The applicant companies and various claimants having filed statements with respect to the fees and expenses requested herein; a hearing having been held thereon after due notice; the Public Utilities Division of the Commission having issued to the various claimants its Proposed Findings and Opinion with respect to the reasonableness and allocation of the fees and expenses requested herein; various claimants having raised certain objections to the Proposed Findings and Opinion of the Public Utilities Division and oral argument having been held thereon before the Commission;

The Public Utilities Division having made certain recommendations as to the allocation of certain fees and expenses, and having recommended that jurisdiction be released as to such reasonableness;

No objections having been made by any claimant to these recommendations contained in the Proposed Findings and Opinion and it appearing to the Commission that such recommendations should be adopted in all substantial respects and that it would be appropriate for the Commission to issue its order at this time with respect to the allocation of the fees or expenses of such claimants;

The Commission having considered the record;

It is ordered, That the following fees and expenses be, and they hereby are allocated against North Shore Gas Company, North Continent Utilities Corporation, and the funds reserved for the expenses of the liquidation of the North Shore Coke & Chemical Company, in the following manner:

Claimant or expenditure	Allocated against: North Shore Gas Company	Allocated against: North Continent Utilities Corporation	Funds reserved for expenses of liquidation of North Shore Coke Chemical Company
Electreporter, Inc.	$1,604.33	$752.17	
Hall & Hulse	301.50		
Koppers Co.	916.65		
Harris Trust and Savings Bank	1,250.00		
Continental Illinois National Bank and Trust Co. of Chicago	6,246.20		
Federal stamp tax on new securities	5,781.27		
Lincoln Printing Co.[1]	9,046.39	1,971.80	
R. R. Donnelly & Sons Co.	7,228.49		
Neely Printing Co.[2]	603.35	201.12	
D. F. Keller & Co.	2,736.45		
McCormick & Henderson, Inc.	256.92		
The Columbian Bank Note Co.	2,918.00		$22.00
Robbins Conveying Belt Co.	300.00		
Schwartz & Co., Inc.	200.00		
P. N. Peterson & Co.	165.00		
The Hubert Co.	100.00		
Thomas Killian	50.00		
L. G. Clarke	15.00		
McDonald Electrical Co.	30.00		
McKinney Steel and Sales Co.	25.00		
J. O'Connor	9.00		
C. O. Swanson	15.00		
Waukegan Glass Co.	5.00		
S. F. Graves	8.10		
Ross Richards Reporting Agency	61.25		
Lake County Recorder	4.25		
City National Bank & Trust Co.	5.33		
North Continent Mines, Inc.	45.73		
Myron Bradley	6.67	3.33	
J. G. Hart	36.64	18.32	
Illinois Commerce Commission	6.67	3.33	
Public Service Commission of Wisconsin	1.33	.67	
Directors' fees of Chemical Co.			220.00
Lamberty Co.			3.00
Secretary of State, Delaware			141.78
Corporation Trust Co.			114.47
Total	$39,979.52	$2,950.74	$501.25

[1] Pam, Hurd & Reichmann, counsel to the applicant companies, has advanced to Lincoln Printing Company $5,000 on behalf of the applicant companies. The sums payable, therefore, to Lincoln Printing Company by North Continent Utilities Corporation and North Shore Gas Company will be reduced by $4,105.21 and $894.79, respectively, accordingly, of the amount of the bill of Lincoln Printing Company allocated against North Shore Gas Company, $4,941.18 is payable to Lincoln Printing Company and $4,105.21 to Pam, Hurd and Reichmann; and of the amount allocated against North Continent Utilities Corporation, $1,077.01 is payable to Lincoln Printing Company, and $894.79 to Pam, Hurd & Reichmann.

[2] North Shore Gas Company has already paid Neely Printing Company $34.02 on account, leaving a balance payable by North Shore Gas Company of $569.33.

In certain instances, as shown in the following table, North Shore Gas Company has made payments on account which are in excess of the amounts allocated to it. In these instances North Continent Utilities Corporation shall reimburse North Shore Gas Company in the amount of such excess as follows:

Claimants and expenditures	Amount allocated against— North Shore Gas Company	Amount allocated against— North Continent Utilities Corporation	Amount paid on account by North Shore Gas Company	Amount to be reimbursed by North Continent Utilities Corporation to North Shore Gas Company
Electreporter, Inc.	$1,604.33	$752.17	$2,214.00	$609.67
Myron Bradley	6.67	3.33	10.00	3.33
J. G. Hart	36.64	18.32	54.96	18.32
Illinois Commerce Commission	6.67	3.33	10.00	3.33
Public Service Commission of Wisconsin	1.33	.67	2.00	.67
Totals	$1,655.64	$777.82	$2,290.96	$635.32

It is further ordered, That jurisdiction be and hereby is released as to the reasonableness of the aforesaid fees and expenses.

It is further ordered, That jurisdiction be and hereby is reserved as to the remainder of the fees and expenses, applications with respect to which have been filed heretofore in this proceeding.

[SEAL] ORVAL L. DUBOIS, *Secretary.*

[F. R. Doc. 42-12918; Filed, December 5, 1942; 11:42 a. m.]

[File No. 59-4]

ENGINEERS PUBLIC SERVICE COMPANY

NOTICE OF FILING OF APPLICATION FOR AN EXTENSION OF TIME AND ORDER FOR HEARING

At a regular session of the Securities and Exchange Commission, held at its office in the City of Philadelphia, Pennsylvania, on the 3rd day of December, 1942.

In the matter of Engineers Public Service Company and Its Subsidiary Companies—Respondents.

The Commission having heretofore by its order dated December 29, 1941 pursuant to section 11 (b) (1) of the Public Utility Holding Company Act of 1935 ordered Engineers Public Service Company to divest itself of its interest in the securities of Missouri Service Company, The Northern Kansas Power Company and The Western Public Service Company, a Delaware corporation:

Notice is hereby given that Engineers Public Service Company has filed an application pursuant to section 11 (c) of said Act for an extension of an additional year within which to comply with the Commission's order of December 29, 1941;

It appearing to the Commission that it is appropriate in the public interest and in the interest of investors and consumers that a hearing be held to consider said application:

It is hereby ordered, That a hearing on said application under the applicable provisions of the Act and the rules of the Commission thereunder be held on December 21, 1942, at 10:00 A. M. in the offices of the Securities and Exchange Commission, 18th and Locust Streets, Philadelphia, Pennsylvania;

It is further ordered, That, without limiting the scope of the issues presented by said application, particular attention will be directed at said hearing to the following questions:

(1) Whether Engineers Public Service Company has exercised due diligence in its efforts to comply with the order of the Commission of December 29, 1941;

(2) Whether an extension of an additional year for compliance with said order of December 29, 1941 is necessary or appropriate in the public interest or for the protection of investors or consumers:

It is further ordered, That William W. Swift or any other officer or officers of the Commission designated by it for that purpose shall preside at the hearing in such matters. The officer so designated to preside is hereby authorized to exercise all powers given to the Commission under section 18 (c) of the Act and to a trial examiner under the Commission's Rules of Practice.

It is further ordered, That any person desiring to be heard or otherwise wishing to participate in this proceeding shall file with the Secretary of the Commission on or before December 19, 1942 his request or application therefor as provided in Rule XVII of the Commission's Rules of Practice.

It is further ordered, That the Secretary of the Commission shall serve notice of the entry of this order by mailing a copy thereof by registered mail to the respondent and that notice shall be given to all other persons by publication thereof in the FEDERAL REGISTER.

By the Commission.

[SEAL] ORVAL L. DUBOIS, *Secretary.*

[F. R. Doc. 42-12919; Filed December 5, 1942; 11:42 a. m.]