Vol.41–No.139
7–19–76
PAGES
29653–29801

federal register

MONDAY, JULY 19, 1976

highlights

PART I:

ADMINISTRATIVE IMPROVEMENTS
Administrative Conference of United States recommends changes in "Federal Register" and CFR, informal rulemaking procedures, and exceptions to mandatory retirement age for Federal employees 29653

ANIMAL DRUGS
HEW/FDA approves use of dichlorophene/toluene capsules for dogs and cats, and withdraws approval of Temaril-P Granulets for dogs, cats and horses (2 documents); effective 7–19–76 29667

BRAKES
DOT/NHTSA republishes standards for air and hydraulic brake systems 29696

CONSERVATION EQUIPMENT
USDA/SCS terminates grant program; effective 7–1–76 .. 29655

DRUG LISTING
HEW/FDA proposes to expand the use of code designations; comments by 9–17–76 29709

FREEDOM OF INFORMATION INDICES
OFR publishes quarterly guide to agency material 29720

INFORMATION
Treasury/CS adopts rules increasing access to vessel manifests; effective 8–18–76 29665

MIDWAY ISLANDS
DOD/Navy adopts Code of law for civil administration 29672

OCCUPANT CRASH PROTECTION
DOT/NHTSA proposes to extend availability of current options, comments by 8–20–76; and to modify test procedures and requirements, comments by 10–20–76 .. 29715

RAILROADS
ICC proposes to examine tank car allowance system; conference on 8–31–76, comments and intent to participate by 8–24–76 29712

REMOTE PICKUP BROADCAST STATIONS
FCC amends nearly all aspects of licensing, frequency allocation, technical specifications, etc.; effective 8–31–76 29681

CONTINUED INSIDE

reminders

(The items in this list were editorially compiled as an aid to FEDERAL REGISTER users. Inclusion or exclusion from this list has no legal significance. Since this list is intended as a reminder, it does not include effective dates that occur within 14 days of publication.)

Rules Going Into Effect Today

DOT/FAA—Airworthiness directives; Bell. 23939; 6–14–76

Jet routes; waypoint name change. 24581; 6–17–76

FCC—Radio broadcast services; table of assignments; Iowa..... 24127; 6–15–76

JUSTICE/INS—Tugboats from Canada; inspection 24700; 6–18–76

TREASURY/CS—Field organization; general provisions..... 24702; 6–18–76

USDA/AMS—Tobacco; inspection. 24575; 6–17–75

List of Public Laws

NOTE: No public bills which have become law were received by the Office of the Federal Register for inclusion in today's LIST OF PUBLIC LAWS.

AGENCY PUBLICATION ON ASSIGNED DAYS OF THE WEEK

Twelve agencies have agreed to a six-month trial period based on the assignment of two days a week beginning February 9 and ending August 6 (See 41 FR 5453). The participating agencies and the days assigned are as follows:

Monday	Tuesday	Wednesday	Thursday	Friday
NRC	USDA/ASCS		NRC	USDA/ASCS
DOT/COAST GUARD	USDA/APHIS		DOT/COAST GUARD	USDA/APHIS
DOT/NHTSA	USDA/FNS		DOT/NHTSA	USDA/FNS
DOT/FAA	USDA/REA		DOT/FAA	USDA/REA
DOT/OHMO	CSC		DOT/OHMO	CSC
DOT/PSOO	LABOR		DOT/PSOO	LABOR

Documents normally scheduled on a day that will be a Federal holiday will be published the next work day following the holiday.

Comments on this trial program are invited. Comments should be submitted to the Director of the Federal Register, National Archives and Records Service, General Services Administration, Washington, D.C. 20408.

ATTENTION: Questions, corrections, or requests for information regarding the contents of this issue only may be made by dialing 202–523–5286. For information on obtaining extra copies, please call 202–523–5240. To obtain advance information from recorded highlights of selected documents to appear in the next issue, dial 202–523–5022.

federal register

Area Code 202 Phone 523–5240

Published daily, Monday through Friday (no publication on Saturdays, Sundays, or on official Federal holidays), by the Office of the Federal Register, National Archives and Records Service, General Services Administration, Washington, D.C. 20408, under the Federal Register Act (49 Stat. 500, as amended; 44 U.S.C., Ch. 15) and the regulations of the Administrative Committee of the Federal Register (1 CFR Ch. I). Distribution is made only by the Superintendent of Documents, U.S. Government Printing Office, Washington, D.C. 20402.

The FEDERAL REGISTER provides a uniform system for making available to the public regulations and legal notices issued by Federal agencies. These include Presidential proclamations and Executive orders and Federal agency documents having general applicability and legal effect, documents required to be published by Act of Congress and other Federal agency documents of public interest. Documents are on file for public inspection in the Office of the Federal Register the day before they are published, unless earlier filing is requested by the issuing agency.

The FEDERAL REGISTER will be furnished by mail to subscribers, free of postage, for $5.00 per month or $50 per year, payable in advance. The charge for individual copies is 75 cents for each issue, or 75 cents for each group of pages as actually bound. Remit check or money order, made payable to the Superintendent of Documents, U.S. Government Printing Office, Washington, D.C. 20402.

There are no restrictions on the republication of material appearing in the FEDERAL REGISTER.

VETERANS BENEFITS

VA adopts rules clarifying provisions for regular aid and attendance; effective 7–13–76 29680

MEETINGS—

USDA/SCS: Public Advisory Committee on Soil and Water Conservation; 9–29, 9–30 and 10–1–76 29738
FEA: Environmental Advisory Committee; 8–4–76 29747
FPC: Conservation-Technical Advisory Task Force, Efficiency in Use of Gas; 8–18–76 29751
HEW/FDA: Mammography Equipment, field limitation and alignment; 7–21–76 29739
Interior/NPS: Fire Island National Seashore; 7–24, 7–27, and 7–30–76 29736
Stones River National Battlefield and Cemetery; 8–13–76 29736
National Foundation on the Arts and the Humanities: Fellowships Panel; 8–2, 8–19, 8–23, and 8–27–76 29762
NSF: Advisory Group on Anticipated Advances in Science and Technology; 8–5–76 29763
Advisory Group on Contributions of Technology to Economic Strength; 8–6–76 29763
International Decade of Ocean Exploration Proposal Review Panel; 8–18 through 8–20–76 29763
NRC: Advisory Committee on Reactor Safeguards Ad Hoc Working Group on Reactor Pressure Vessel Loadings; 8–5–76 29763
Advisory Committee on Reactor Safeguards; preliminary schedule; various dates 29764

PART II:

SECURITIES

SEC proposes to simplify corporate disclosure system; comments by 9–15–76 29783

PART III:

ELECTIONS

FEC publishes advisory opinion requests 29793

PART IV:

INVESTIGATIONS

CFTC adopts procedures; effective 7–19–76 29797

contents

ADMINISTRATIVE CONFERENCE OF THE UNITED STATES

Rules
Recommendations:
Miscellaneous amendments 29653

AGENCY FOR INTERNATIONAL DEVELOPMENT

Notices
Authority delegations:
Colombia, Director 29734
Colombia, Mission Director and U.S. Ambassador 29734
Guatemala, Director 29734
Honduras, Director (2 documents) 29734
Nicaragua, Director 29734
Panama, Mission director 29734
Paraguay, Director 29734

AGRICULTURAL MARKETING SERVICE

Rules
Milk marketing orders:
Middle Atlantic area; correction 29656
Oranges (Valencia) grown in Ariz. and Calif 29656

AGRICULTURE DEPARTMENT

See Agricultural Marketing Service; Forest Service; Soil Conservation Service.

ARTS AND HUMANITIES, NATIONAL FOUNDATION

Notices
Meetings:
Advisory Committee Fellowships Panel 29762

CIVIL AERONAUTICS BOARD

Proposed Rules
Air carrier accounts, inclusive tours and fees for special services; extension of comment period 29709

Notices
Hearings, etc.:
Globus-Gateway Tours, Ltd 29743
Pan American World Airways, Inc. and Trans World Airlines, Inc 29743

COAST GUARD

Rules
Security zones:
Penns Landing, Delaware River, and Philadelphia, Pennsylvania; republication 29680

Notices
Hearings:
Proposed bridge alteration; Point Pleasant Canal, N.J 29742

COMMERCE DEPARTMENT

See National Oceanic and Atmospheric Administration.

COMMODITY FUTURES TRADING COMMISSION

Rules
Commodity Exchange Act:
Investigations 29797

CUSTOMS SERVICE

Rules
Information, availability:
Vessel manifests 29666

DEFENSE DEPARTMENT

See Navy Department.

EDUCATION OFFICE

Notices
Meetings:
National Advisory Council for Career Education, correction 29742

ENVIRONMENTAL PROTECTION AGENCY

Rules
Pesticide chemcials in or on raw agricultural commodities, tolerances and exemptions, etc.:
S-[2-(ethylsulfinyl) ethyl] O,O-dimethyl phosphorothioate; correction 29681

Notices
Pesticide applicator certification; *State plans:*
Iowa 29719

FEDERAL AVIATION ADMINISTRATION

Rules
Airworthiness directives:
Alexander Schleicher 29662
Cessna 29662
Curtiss-Wright 29663
Control zone 29663
Controlled airspace 29664
Transition areas (2 documents) 29664

Proposed Rules
Airworthiness directives:
Boeing 29714
McDonnell Douglas 29714
Transition areas 29715

FEDERAL COMMUNICATIONS COMMISSION

Rules
Cable television relay services:
Clarification of certain rules 29694
Radio broadcast services:
Table of assignments, Alaska 29681
Remote Pickup Broadcast stations:
Experimental, auxiliary, and special broadcast, and other distributional services 29681

Proposed Rules
FM broadcast stations; table of assignments; Ky 29710

Notices
Canadian broadcast stations 29744
Domestic public radio services; applications accepted for filing 29744
Land mobile communications:
Interference from spark type ignition systems 29746

Petitions for rulemaking filed, granted, denied, etc. 29743
Hearings, etc.:
Tra-Mar Communications, Inc., et al. 29746

FEDERAL DISASTER ASSISTANCE ADMINISTRATION

Notices
Authority delegations:
Assistant Secretary for Housing—Federal Housing Commissioner (2 documents) 29719
Disaster areas:
South Dakota 29719

FEDERAL ELECTION COMMISSION

Notices
Advisory opinion requests 29793

FEDERAL ENERGY ADMINISTRATION

Notices
Consent order:
Fuel Resources Development Co 29747
Meetings:
Environmental Advisory Committee 29747

FEDERAL INSURANCE ADMINISTRATION

Rules
Flood insurance programs, National:
Special hazard areas, map corrections (19 documents) 29667–29672

FEDERAL MARITIME COMMISSION

Notices
Agreements filed, etc.:
Germany-North Atlantic Ports Rate Agreement 29748
Steamship Operators Intermodal Committee 29748

FEDERAL POWER COMMISSION

Rules
Statements and reports (schedules):
Steam-electric plant air and water quality-control data, collection of steam-electric generating plant and pollution control data 29665

Notices
Meetings:
Conservation-Technical Advisory Task Force—Efficiency in use of Gas 29751
Hearings, etc.:
Algonquin Gas Transmission Co 29748
American Electric Power Service Corp 29749
Arkansas Power and Light Co 29749
Ashland Oil, Inc 29749
Carolina Power & Light Co 29749
Central Maine Power Co 29750
Clark Oil Producing Co 29750
Cleveland Electric Illuminating Co 29750
Commercial Pipeline Co., Inc 29750
Connecticut Light and Power Co. (3 documents) 29751
Detroit Edison Co. (2 documents) 29751, 29752
Diamond Shamrock Corp 29752
Ellis, William B 29762
El Paso Natural Gas Co 29752
Equitable Gas Co 29753
Florida Power & Light Co 29753
Great Lakes Gas Transmission Co., et al 29755
Hunt, H. L., et al 29756
Indiana and Michigan Electric Co 29756
McCulloch Interstate Gas Corp 29756
Midwestern Gas Transmission Co 29756
Monongahela Power Co., et al 29757
Natural Gas Pipeline Company of America (2 documents) 29757
New England Power Co 29758
Northern Electric Cooperative Association 29758
Northern Illinois Gas Co 29759
Northern Natural Gas Co 29760
Northern States Power Co 29760
Panhandle Eastern Pipe Line Co 29760
South Georgia Natural Gas Co 29761
Southern California Edison Co 29761
Texas Gas Transmission Corp 29761
Utah Power & Light Co 29761
Weatherston, Douglas and George 29752

FEDERAL REGISTER OFFICE

Notices
Freedom of information index requirements; quarterly guide to agency material 29720

FOOD AND DRUG ADMINISTRATION

Rules
Animal drugs, feeds, and related products:
Dichlorophene and toluene capsules 29667

Proposed Rules
Human drugs:
Code designations; expanded use 29709

Notices
Animal drugs:
Norden Laboratories, Inc 29740
Meetings:
Field limitation and alignment for mammography equipment 29739

FOREST SERVICE

Notices
Environmental impact statements, availability, etc.:
George Washington National Forest, Va 29737
Medicine Bow National Forest, Wyo 29737
Prescott National Forest Timber Management Program, Ariz 29737

HEALTH, EDUCATION, AND WELFARE DEPARTMENT

See Education Office; Food and Drug Administration; Health Services Administration.

HEALTH SERVICES ADMINISTRATION

Notices
Professional Standards Review Organizations; inquiry:
California 29740
Colorado 29740
Maryland 29740
Massachusetts (2 documents) 29740, 29741
Minnesota 29741
Mississippi 29741
Oregon 29741
Tennessee 29742
Utah 29742
Wyoming 29742

HOUSING AND URBAN DEVELOPMENT DEPARTMENT

See Federal Disaster Assistance Administration; Federal Insurance Administration.

INTERIOR DEPARTMENT

See also Land Management Bureau; National Park Service.

Notices
Hearings, etc.:
Idaho, southeastern, phosphate resources 29736

INTERSTATE COMMERCE COMMISSION

Proposed Rules
Tank car allowance system; investigation 29712

Notices
Fourth section application for relief 29778
Hearing assignments 29777
Motor carriers:
Temporary authority applications 29778
Transfer proceedings 29780

LAND MANAGEMENT BUREAU

Notices
Applications, etc.:
Western Slope Gas Co 29736

NATIONAL CREDIT UNION ADMINISTRATION

Proposed Rules
Incidental powers; extension of comment period 29712

NATIONAL HIGHWAY TRAFFIC SAFETY ADMINISTRATION

Rules
Motor vehicle safety standards:
Brake system standards; republication 29696

Proposed Rules
Motor vehicle safety standards:
Passenger car crash protection options, extension 29715

NATIONAL OCEANIC AND ATMOSPHERIC ADMINISTRATION

Notices
Endangered species permits; applications 29739
Marine mammal permit applications; etc.:
Aquatic Mammals Enterprises 29738
Montreal Aquarium 29739

NATIONAL PARK SERVICE

Notices

Meetings:

Fire Island National Seashore, N.Y.; general management plan ---- 29736

Stones River National Battlefield and Cemetery, Tenn.; general management plan ---- 29736

NATIONAL SCIENCE FOUNDATION

Notices

Meetings:

Advisory Group on Anticipated Advances in Science and Technology ---- 29763

Advisory Group on Contributions of Technology to Economic ---- 29763

International Decade of Ocean Exploration Proposal Review Panel ---- 29763

NAVY DEPARTMENT

Rules

Midway Island Code; civil administration of ---- 29672

NUCLEAR REGULATORY COMMISSION

Notices

Meetings:

Advisory Committee on Reactor Safeguards; Ad Hoc Working Group on Reactor Pressure Vessel Loadings ---- 29763

Advisory Committee on Reactor Safeguards; proposed for various subcommittees ---- 29764

SECURITIES AND EXCHANGE COMMISSION

Proposed Rules

Corporate disclosure; simplification ---- 29783

Notices

Self-regulatory organizations; proposed rule changes:

Boston Stock Exchange ---- 29766

Hearings, etc.:

Allegheny Power System, Inc., et al ---- 29765

Contran Corp. (2 documents) ---- 29766, 29771

Depository Trust Co ---- 29772

Diversified Industries, Inc ---- 29772

Equity Funding Corporation of America and Orion Capital Corp ---- 29773

Merrill Lynch Ready Assets Trust, et al ---- 29773

Middle South Utilities, Inc., et al ---- 29767

Midwest Securities Trust Co ---- 29775

Philadelphia Stock Exchange ---- 29775

Southern Co ---- 29775

Southwestern Electric Power Co ---- 29776

Weeden & Co ---- 29768

White, Weld & Co., Inc ---- 29770

Viking Growth Fund Systematic Investment Plans ---- 29771

SMALL BUSINESS ADMINISTRATION

Rules

Standards of conduct ---- 29656

Notices

Disaster areas:

Kansas ---- 29777

SOIL CONSERVATION SERVICE

Rules

Conservation Districts Equipment Grant Programs; termination ---- 29655

Notices

Environmental impact statements, availability, etc.:

Finn Creek Watershed, Okla ---- 29737

Mills Creek Watershed Project, Fla. ---- 29738

Meetings:

Soil and Water Conservation Public Advisory Committee ---- 29738

STATE DEPARTMENT

See Agency for International Development.

TRANSPORTATION DEPARTMENT

See also Coast Guard; Federal Aviation Administration; National Highway Traffic Safety Administration.

Rules

Organization and authority delegations:

Correction ---- 29696

TREASURY DEPARTMENT

See also Customs Service.

TREASURY DEPARTMENT

Notices

Notes, Series P-1978; auction ---- 29735

VETERANS ADMINISTRATION

Rules

Adjudication, pensions, compensation, dependency, etc.:

Aid and attendance, regular ---- 29680

"THE FEDERAL REGISTER—WHAT IT IS AND HOW TO USE IT"

Weekly Briefings at the Office of the Federal Register

(For Details, See 41 FR 22997, June 8, 1976)

RESERVATIONS: BILL SHORT, 523-5282

list of cfr parts affected in this issue

The following numerical guide is a list of the parts of each title of the Code of Federal Regulations affected by documents published in today's issue. A cumulative list of parts affected, covering the current month to date, follows beginning with the second issue of the month.

A Cumulative List of CFR Sections Affected is published separately at the end of each month. The guide lists the parts and sections affected by documents published since the revision date of each title.

1 CFR

302 29653
305 29653

7 CFR

662 29655
908 29656
1004 29656

12 CFR

PROPOSED RULES:
721 29712

13 CFR

105 29656

14 CFR

39 (3 documents) 29662, 29663
71 (4 documents) 29663, 29664

PROPOSED RULES:
39 (2 documents) 29714
71 29715
249 29709

17 CFR

11 29798

PROPOSED RULES:
240 29784
249 29784

18 CFR

141 29665

19 CFR

103 29666

21 CFR

520 29667

PROPOSED RULES:
207 29709

24 CFR

1920 (19 documents) 29667–29672

32 CFR

762 29672

33 CFR

127 29680

38 CFR

3 29680

40 CFR

180 29681

47 CFR

73 29681
74 29681
78 29694

PROPOSED RULES:
73 29710

49 CFR

1 29696
571 29696

PROPOSED RULES:
Ch. X 29712
571 29715

CUMULATIVE LIST OF PARTS AFFECTED DURING JULY

The following numerical guide is a list of parts of each title of the Code of Federal Regulations affected by documents published to date during July.

1 CFR

302 — 29653
305 — 29653

3 CFR

PROCLAMATIONS:

4445 (correction) — 29089
4446 — 27023
4447 — 27309
4448 — 27707

EXECUTIVE ORDERS:

August 23, 1895 (Revoked in part by PLO 5590) — 27836

LETTERS:

July 1, 1976 — 27709, 27711

4 CFR

410 — 27311

5 CFR

213 — 27311, 27713, 28255, 29373
352 — 27713, 28783
1001 — 28783

7 CFR

2 — 27827
26 — 27969
245 — 28783
250 — 29408
251 — 29408
271 — 27365, 28784
301 — 27371
662 — 29655
719 — 27374
908 — 27076, 27714, 28784, 29130, 29656
910 — 27376, 28286, 29408
911 — 27375, 28286, 29409
916 — 28784
917 — 27375, 28287, 28508
922 — 98785
945 — 29131
958 — 29133
980 — 27970, 29131
981 — 27827
1004 — 28785, 29656
1134 — 27077
1425 — 27077
1427 — 27078
1438 — 28287
1464 — 27080, 27376
1701 — 28289
1822 — 27970
1831 — 27971
1843 — 28509
1871 — 27081

PROPOSED RULES:

52 — 28291, 28527, 28792
225 — 28796
271 — 27388
275 — 28312
780 — 29413
905 — 28528
911 — 28295
916 — 27844
917 — 27735, 28794
944 — 28528
946 — 28295
947 — 28529, 29411

7 CFR—Continued

PROPOSED RULES—Continued

948 — 27386, 28297, 28530
958 — 27386, 27387
967 — 27972
980 — 27387, 28295
982 — 29411
984 — 28297
989 — 28979
1004 — 28308
1033 — 29412
1124 — 27844
1822 — 28795
1861 — 27851

8 CFR

100 — 27311
103 — 27312
214 — 27313
344 — 27313

PROPOSED RULES:

214 — 29149

9 CFR

73 — 29373
113 — 27714

PROPOSED RULES:

112 — 28311
303 — 28312
320 — 28312
381 — 28312

10 CFR

211 — 27953
212 — 27730

PROPOSED RULES:

2 — 27085
50 — 27085
205 — 27976
211 — 28797

11 CFR

PROPOSED RULES:

106 — 28413

12 CFR

202 — 28255
207 — 28257
220 — 28257
221 — 28258
226 — 28255, 28945
265 — 27026, 28946

PROPOSED RULES:

226 — 28313
342 — 28544
563 — 27852
563c — 28545
570 — 27852
721 — 29712

13 CFR

105 — 29652

14 CFR

21 — 27954
37 — 27955

14 CFR—Continued

39 — 27026–27069, 27715–27717, 27955, 27956, 28509, 29091–29093, 29662, 29663
71 — 27029, 27030, 27718, 27719, 27956–27958, 28510, 29091–29096, 29663, 29664
73 — 27030, 29091–29097
75 — 29092, 29097, 29098
97 — 27719, 28511, 29098
208 — 28786
221 — 28946
241 — 27827, 28268
288 — 27313
298 — 27314, 28512
310 — 28946
399 — 28946

PROPOSED RULES:

1 — 27738
39 — 27084, 27738, 27975, 27976, 29714
71 — 27084, 27085, 27739, 28533–28535, 29152, 29715
75 — 29153
91 — 28535
191 — 27738
249 — 28313, 29709
278b — 28313
373 — 29426
389 — 28313

15 CFR

30 — 29374
377 — 28258

16 CFR

13 — 27030, 27720, 27827, 27959, 29099
703 — 27828
1009 — 27960

PROPOSED RULES:

3 — 27744
447 — 27391
1201 — 27852

17 CFR

1 — 28260, 28947
10 — 28260
11 — 29798
12 — 28260
14 — 28471
140 — 27510, 28260, 28473
146 — 28260
180 — 27520
200 — 29374
240 — 27961, 28947
249 — 28947

PROPOSED RULES:

180 — 27526
240 — 28798, 29434, 29784
249 — 29784

18 CFR

2 — 27030, 27828
35 — 27829
101 — 28474
104 — 28474
141 — 28474, 29665

18 CFR—Continued

201 — 28474
204 — 28474
260 — 28474

PROPOSED RULES:

141 — 28416, 28904, 29179
250 — 29165

19 CFR

103 — 29666
152 — 28786
153 — 27843
159 — 27031, 28787
201 — 28950

PROPOSED RULES:

1 — 27962, 28517
10 — 27962

20 CFR

401 — 27314
405 — 27961

21 CFR

5 — 28261
193 — 28951
310 — 28261
510 — 28264
520 — 27722, 28264, 29667
522 — 27033, 27316, 28265
558 — 28513
561 — 28790, 28951
640 — 27034
1002 — 27316
1220 — 27316
1303 — 28514
1304 — 28514
1308 — 28515

PROPOSED RULES:

128d — 28990
207 — 29709
436 — 29413
440 — 27082
444 — 29151
448 — 29413
452 — 27083
540 — 28313

22 CFR

6 — 29100

PROPOSED RULES:

64 — 29410

23 CFR

130 — 27962
230 — 28270
655 — 28477

PROPOSED RULES:

750 — 27739
1204 — 29434

24 CFR

35 — 28876
200 — 29140
845 — 27831, 27963
1914 — 29141, 29142
1915 — 28959, 29396
1920 — 29667–29672

PROPOSED RULES:

888 — 28930
1917 — 28990
3283 — 29072

25 CFR

221 — 28266

PROPOSED RULES:

41 — 27082

26 CFR

Ch. I — 28478

PROPOSED RULES:

1 — 28517, 28523, 28792, 29411
31 — 28517
301 — 28523

27 CFR

72 — 27034

28 CFR

42 — 28478
45 — 27317

PROPOSED RULES:

16 — 27972

29 CFR

40 — 27318
95 — 29378
96 — 29378
403 — 27318
524 — 29378
1952 — 28788

PROPOSED RULES:

1910 — 27744, 29425
1928 — 27378, 28797
1952 — 28313

30 CFR

55 — 28266
56 — 28266
57 — 28266
250 — 27319
251 — 27319

31 CFR

103 — 27831
520 — 27963

32 CFR

251 — 27963
286 — 27074
296 — 27074
297 — 27074
705 — 29101
707 — 29119
711 — 27319
742 — 29119
761 — 28957
762 — 29672
765 — 29101

32A CFR

Ch. I — 27722

33 CFR

110 — 27965
117 — 27035
127 — 27035, 27036, 27377, 27965, 27966, 28478, 29378, 29680
209 — 28952

PROPOSED RULES:

40 — 28531
110 — 27974, 27975, 28532
206 — 27378
237 — 29146

35 CFR

5 — 28789
253 — 27722
255 — 29378

PROPOSED RULES:

133 — 27978

36 CFR

7 — 27723, 29120
292 — 29379

PROPOSED RULES:

7 — 28291

37 CFR

1 — 27832

38 CFR

3 — 29120, 29680

PROPOSED RULES:

3 — 27391, 29188
4 — 27086

39 CFR

111 — 28478, 29136
244 — 27353

40 CFR

35 — 27966
52 — 27833, 28491, 28492
60 — 27967
61 — 27967
86 — 29389
124 — 28493
125 — 28493
141 — 28402
180 — 27036, 27355–27358, 28790, 29121, 29681
430 — 27732
454 — 27968
459 — 29078

PROPOSED RULES:

128 — 29156
129 — 29156
141 — 28991
180 — 27741, 28804, 28998
418 — 29429
430 — 27741
454 — 27976

41 CFR

1–1 — 27723
1–2 — 27725
1–16 — 27723
1–18 — 27725
3–4 — 27834
Ch. 5A — 27037

PROPOSED RULES:

101–20 — 29188

42 CFR

54 — 29379
56b — 29379
57 — 29380
101 — 28686

PROPOSED RULES:

101 — 28690

43 CFR

419 — 29084
1720 — 29122
2110 — 29122
2530 — 29122

43 CFR—Continued

2550 — 29122
2560 — 29122
2740 — 29123
2760 — 29123
2812 — 29123
2820 — 29123
2860 — 29122
2910 — 29123
3100 — 29122
3810 — 29122
3600 — 29122

PUBLIC LAND ORDERS:

5590 — 27836
5591 — 27837
5592 — 28954
5593 — 28954

PROPOSED RULES:

6220 — 27380

45 CFR

160 — 29280
196 — 29123
250 — 27300
1006 — 28497
1061 — 29125
1067 — 27359, 28277
1160 — 29384
1602 — 27837

PROPOSED RULES:

84 — 29548
233 — 27973, 28796

46 CFR

146 — 28116
531 — 27726
536 — 27726

PROPOSED RULES:

Ch. I — 29151

47 CFR

0 — 27837
1 — 27837, 28789, 29137, 29393
43 — 29393
68 — 28694
73 — 27361–27364, 28497, 28789, 29137 28497, 28789, 29137, 29394, 29395, 29681
74 — 28266, 29681
78 — 29694
81 — 29395
83 — 27365, 27727, 29395
91 — 27727

PROPOSED RULES:

13 — 28800
15 — 28536
21 — 29432
73 — 27389–27390, 28801–28803, 29156, 29710
83 — 28800
89 — 28540, 29433

49 CFR

1 — 29696
172 — 27728
173 — 27728

49 CFR—Continued

177 — 27968
192 — 29128
325 — 28267
393 — 28268, 29130
571 — 27073, 28505, 28506, 29696
581 — 27728
1033 — 27728, 27729, 29386, 29387
1041 — 27837
1054 — 27837
1100 — 27838
1108 — 27838
1220 — 28955

PROPOSED RULES:

Ch. X — 29712
221 — 29153
571 — 27740, 29434, 29715
1090–1099 — 28317
1300 — 28799
1307 — 28317

50 CFR

20 — 29387
28 — 28503
32 — 28503
258 — 27843
285 — 27963

PROPOSED RULES:

13 — 27381, 28291
17 — 27381, 27735, 28291, 28525, 28978
20 — 27382
32 — 27844

FEDERAL REGISTER PAGES AND DATES—JULY

Pages	*Date*	*Pages*	*Date*
27023–27308	July 1	28471–28782	12
27309–27705	2	28783–28944	13
27707–27825	6	28945–29087	14
27827–27951	7	29089–29371	15
27953–28253	8	29373–29652	16
28255–28469	9	29653–29801	19

rules and regulations

This section of the FEDERAL REGISTER contains regulatory documents having general applicability and legal effect most of which are keyed to and codified in the Code of Federal Regulations, which is published under 50 titles pursuant to 44 U.S.C. 1510.

The Code of Federal Regulations is sold by the Superintendent of Documents. Prices of new books are listed in the first FEDERAL REGISTER issue of each month.

Title 1—General Provisions

CHAPTER III—ADMINISTRATIVE CONFERENCE OF THE UNITED STATES

PART 302—BYLAWS OF THE ADMINISTRATIVE CONFERENCE OF THE UNITED STATES

PART 305—RECOMMENDATIONS OF THE ADMINISTRATIVE CONFERENCE OF THE UNITED STATES

Miscellaneous Amendments

The Administrative Conference of the United States was established by the Administrative Conference Act, 5 U.S.C. 571–576, to study the efficiency, adequacy and fairness of the administrative procedure used by administrative agencies in carrying out administrative programs, and to make recommendations for improvement to administrative agencies, collectively or individually, to the President, Congress, and the Judicial Conference of the United States (5 U.S.C. 574 (1)).

The Administrative Conference of the United States at its Fourteenth Plenary Session, held June 3–4, 1976, adopted three Recommendations, amended one Recommendation adopted at the Thirteenth Plenary Session, and made a number of minor amendments of its Bylaws.

Recommendation 76–1 urges that the statute providing for mandatory retirement for Federal employees at age 70 and upon completion of 15 years of service be amended to add an exception for certain Presidential appointees. Recommendation 76–2 proposes improvements in the FEDERAL REGISTER and the "Code of Federal Regulations." Recommendation 76–3 specifies for agency consideration certain procedures for use in informal rulemaking in addition to notice and opportunity for comment. The Conference amended Recommendation 75–8 (41 FR 3985) to amplify its proposal for legislation regarding confidentiality of tax returns.

1. The following amendments are made to the Bylaws of the Administrative Conference of the United States, Part 302 of Title 1, Chapter III, CFR:

(a) In § 302.2, paragraph (c)(1) is amended to read as follows:

§ 302.2 Membership.

* * * * *

(c) *Eligibility and Replacements.* (1) A member designated by a Federal agency shall become ineligible to continue as a member of the Conference in that capacity or under that designation if he leaves the service of the agency or department. Designations and re-designations of members shall be filed with the Chairman promptly.

* * * * *

(b) The first sentence of § 302.3 is amended to read as follows:

§ 302.3 Committees.

The following shall constitute the standing committees of the Conference:

1. Committee on Agency Decisional Processes;
2. Committee on Agency Organization and Personnel;
3. Committee on Compliance and Enforcement Proceedings;
4. Committee on Grants, Benefits and Contracts;
5. Committee on Informal Action;
6. Committee on Judicial Review;
7. Committee on Licenses and Authorizations;
8. Committee on Ratemaking and Economic Regulation; and
9. Committee on Rulemaking and Public Information.

* * * * *

The first sentence of § 302.4 is amended to read as follows:

§ 302.4 Liaison arrangements.

The Chairman, with the approval of the Council, may make liaison arrangements with representatives of the Congress, the judiciary, Federal agencies which are not represented on the Conference, and professional associations.

* * * * *

2. The table of contents of Part 305 of Title 1, Chapter III, CFR, is amended to add the following sections:

Sec.
305.76–1 Exception from Mandatory Retirement for Certain Presidential Appointees (Recommendation No. 76–1).
305.76–2 Strengthening the Informational and Notice-Giving Functions of the FEDERAL REGISTER (Recommendation No. 76–2).
305.76–3 Procedures in Addition to Notice and the Opportunity for Comment in Informal Rulemaking (Recomendation No. 76–3).

3. Section 305.76–1 is added to Part 305 to read as follows:

§ 305.76–1 Exception from Mandatory Retirement for Certain Presidential Appointees (Recommendation No. 76–1).

The Civil Service Retirement Act subjects federal employees to mandatory retirement at age 70 and upon completion of 15 years service, 5 U.S.C. 8335 (1970). Under 5 U.S.C. 8335(c), the President has broad discretionary power to exempt employees from mandatory retirement.

This recommendation takes no position as to whether as a matter of personnel administration a policy of mandatory retirement for Federal employees at age 70, coupled with authority to make exceptions in appropriate cases, is desirable. However, as applied to those officers of the executive branch who are appointed by the President with the advice and consent of the Senate the provisions of section 8335 are awkward and inappropriate. Such officers serve either for an indefinite term at the pleasure of the President, for a definite term but nevertheless at the pleasure of the President, see, e.g., 28 U.S.C. 541, 561; or for definite terms under statutes which limit the President's removal power in order to preserve the officers' independence from Executive direction and control.

Where the officers serve at pleasure, the provisions of section 8335 impose a restraint, albeit minor, on the President's appointment power, and are unnecessary to his supervisory responsibility over the execution of the laws. However, they may have occasional value, where the officer's term is otherwise indefinite, in compelling consideration of the continued suitability of a longtime incumbent. Where the officer serves at pleasure but for a definite term, even this advantage largely disappears. Where the officers do not serve at pleasure, as in the case of the members of the independent regulatory commissions, the application of section 8335 is inconsistent with the goal of agency independence and a potential source of embarrassment to the officer, the agency and the President.

Recommendation[1]

Congress should amend 5 U.S.C. 8335(d), which contains exceptions to the mandatory retirement provisions, to add a new exception for employees appointed by the President with the advice and consent of the Senate to serve for a definite term of years.

4. Section 305.76–2 is added to Part 305 to read as follows:

§ 305.76–2 Strengthening the Informational and Notice-Giving Functions of the "Federal Register" (Recommendation No. 76–2).

The primary role of the FEDERAL REGISTER is the publication, as required by the Federal Register Act and the Administrative Procedure Act, of legal documents that affect people generally, such as descriptions of agencies' organization and functions, texts of substantive and procedural rules, notices of proposed rulemaking, and statements of general policy or interpretations of general applicability formulated and adopted by agencies. The Office of the Federal Reg-

[1] Separate statement of Kenneth Culp Davis filed as part of the original document.

ister serves as an official depository for the filing of these documents, and their publication in the FEDERAL REGISTER provides the public with notice of their contents. Paragraphs A and B of the Recommendation seek to strengthen this informational function of the FEDERAL REGISTER.

The secondary role of the FEDERAL REGISTER is the publication of notices pertaining to adjudicatory matters. Statutory requirements and agency practices with respect to the publication of these notices conform to no pattern but vary widely among agencies and among different types of adjudicatory proceedings. Since the establishment of the FEDERAL REGISTER, Congress has enacted a considerable number of statutes that specifically require agencies to publish in the FEDERAL REGISTER notices of applications, hearings or decisions in adjudicatory proceedings. In addition, agencies have often obtained the approval of the Director of the Federal Register to publish in the FEDERAL REGISTER notices pertaining to adjudicatory matters despite the absence of an express publication requirement. Paragraphs C and D of the Recommendation seek to define and strengthen this notice-giving function of the FEDERAL REGISTER.

RECOMMENDATION

A. *Preservation of Documents in the "Code of Federal Regulations."* The Administrative Committee of the Federal Register should require each agency to the maximum extent practicable to preserve in the "Code of Federal Regulations" documents of general applicability that are published in the FEDERAL REGISTER and are of continuing interest to the members of the public. Particularly, actions should be taken to the extent practicable in the following areas:

1. The Administrative Committee should act to preserve in the "Code of Federal Regulations" descriptions of each agency's organization and functions required to be published in the FEDERAL REGISTER under sections 552(a)(1) (A) and (B) of the Administrative Procedure Act. All agencies should inform the public of their organization and functions by publishing complete and informative descriptions in each year's edition of the "Code of Federal Regulations." Subsequent changes in an agency's description of its organization and functions should appear in the Rules and Regulations section of the FEDERAL REGISTER where the codification system adopted for use in the Code controls the order of publication and provides a useful finding aid for subsequent developments.

2. The Administrative Committee and the agencies should act to preserve in the "Code of Federal Regulations" those statements of basis and purpose (or portions thereof) accompanying the publication in the FEDERAL REGISTER of newly promulgated rules that are of continuing interest to members of the public. If the preservation of an agency's basis and purpose statements in successive editions of the "Code of Federal Regulations" is likely to become cumbersome, the texts of the statements prepared by that agency during each preceding year should be reprinted only once in that year's edition of the "Code of Federal Regulations," either at the end of the title or chapter assigned to the agency or in a special Code volume with statements from other agencies, so that subscribers to the Code are at least able to preserve the statements in composite, bound form. Additionally, the annual editions of the "Code of Federal Regulations" should supply the FEDERAL REGISTER citations to pending rulemaking proceedings that affect present regulations or add new regulations.

B. *Publication in the "Federal Register" of Statements of General Policy and Interpretations of General Applicability.* Despite the requirement of section 552(a)(1)(D) of the Administrative Procedure Act that each agency currently publish in the FEDERAL REGISTER for the guidance of the public those "statements of general policy or interpretations of general applicability formulated and adopted by the agency," surprisingly few such policy statements and interpretations are in fact published in the FEDERAL REGISTER. Each agency should review its practices and take necessary measures to insure the publication in the FEDERAL REGISTER of all agency statements of general policy and interpretations of general applicability. In addition, when an agency utilizes an adjudicatory opinion or an instruction to staff for the purpose of adopting a general policy or interpretation of general applicability, it should publish in the FEDERAL REGISTER the pertinent portion of the opinion or of the instruction, or it should promptly summarize the policy or interpretation in guideline form and publish it in the FEDERAL REGISTER. These policy statements and interpretations should be published in the Rules and Regulations section of the FEDERAL REGISTER and should be preserved in the "Code of Federal Regulations" when they are of continuing interest to the public.

C. *Standards for Publication in the Federal Register of Notices Pertaining to Adjudicatory Matters.* Congress should consider the following standards in determining whether to impose new requirements for the publication of notices pertaining to adjudicatory matters and in reviewing existing publication requirements. The Director of the FEDERAL REGISTER should also observe these standards in exercising his discretionary authority to allow the publication in the FEDERAL REGISTER of notices pertaining to adjudicatory matters that are not required by law to be published. In both instances agencies should not rely solely on the publication of notices in the FEDERAL REGISTER to afford notice to interested persons of adjudicatory matters if other forms of public notice are practicable.

1. The FEDERAL REGISTER should not routinely be used to publish the texts of agency orders and opinions in adjudicatory proceedings or notices of those decisions if there is no further opportunity available for interested persons to comment or otherwise to participate in the proceeding, except when such publication serves a necessary legal purpose. Statements of general applicability adopted by an agency in an adjudicatory opinion should be published in the FEDERAL REGISTER in accordance with paragraph B of this Recommendation. Supplementary agency publications that contain the texts of agency orders and opinions in adjudicatory proceedings should be listed in the "Code of Federal Regulations" at the head of the applicable title or chapter assigned to the agency and should be described in greater detail in the agency's regulations published in the Code.

2. The FEDERAL REGISTER should not be used to publish notices of applications, hearings and other adjudicatory matters unless the notices are public notices intended to inform interested members of the public who are not parties to the proceeding of the opportunity to comment or otherwise to participate in the proceeding. In addition, specific categories of public notices (for example, notices of applications or hearings under a specific statutory provision) should not be published if there is no substantial public interest in the proceedings or if the publication of the notices in the FEDERAL REGISTER is unlikely to inform interested persons about pending adjudicatory proceedings of which they would not otherwise receive notice.

3. The various categories of public notices of each agency should be listed and described in detail in the agency's regulations in the "Code of Federal Regulations." The descriptions should designate which public notices appear in the FEDERAL REGISTER and which do not.

D. *Format for Publication in the "Federal Register" of Notices Pertaining to Adjudicatory Matters.* 1. The Administrative Committee of the FEDERAL REGISTER should act to require that notices pertaining to adjudicatory matters that are published in the FEDERAL REGISTER adopt an appropriate public notice format. The notice that appears in the FEDERAL REGISTER should briefly inform interested persons of the nature of the proceeding, the agency's legal authority, the matters of fact and law asserted, and the opportunities available to comment or otherwise to participate in the proceeding and should designate an agency official interested persons may contact for additional information. The published notice should not ordinarily contain the text of any agency order or opinion or a detailed recitation of the legal or factual contentions of the agency or other parties to the proceeding.

2. If a notice pertaining to an adjudicatory matter is published in the FEDERAL REGISTER, it should be published as early in the proceeding as practicable (e.g., at the time an application is filed rather than solely when the agency orders a hearing on the application). An agency may also highlight specific applications or hearings where public participation is particularly important by publishing notices thereof in the FEDERAL REGISTER even though the agency does not publish notices of other applications or hearings under the same statutory provision.

5. Section 305.76-3 is added to Part 305 to read as follows:

§ 305.76-3 Procedures in Addition to Notice and the Opportunity for Comment in Informal Rulemaking (Recommendation No. 76-3).

The Conference's Recommendation 72-5 stated that in rulemaking of general applicability involving substantive rules "Congress ordinarily should not impose mandatory procedural requirements other than those required by 5 U.S.C. 553," and that "Congress should never require trial-type procedures for resolving questions of policy or of broad or general fact." Paragraph 5 of the Recommendation recognized that agencies nevertheless may sometimes appropriately utilize such procedures for resolving issues of specific fact, and it counseled that in rulemaking proceedings of general applicability "each agency should decide in the light of the circumstances of particular proceedings whether or not to provide procedural protections going beyond" the notice-and-comment requirements of Section 553, "such as opportunity for oral argument, agency consultation with an advisory committee, opportunity for parties to comment on each other's written or oral submissions, a public-meeting type of hearing, or trial-type hearing for issues of specific fact."

The present Recommendation enlarges upon paragraph 5 of Recommendation 72-5 by further specifying for agency

consideration certain procedures going beyond notice-and-comment, and by describing some of the "circumstances of particular proceedings" that should move agencies to consider such additional procedures.

The Recommendation grows out of a study of decisions, primarily of the Court of Appeals for the District of Columbia Circuit, in which rulemaking proceedings have been remanded to agencies for additional procedures, and of the responses of the affected agencies. The Recommendation implies no view as to whether those decisions were authorized by the Constitution or relevant statutes. The Recommendation is premised, however, on the view that one can learn from the insights of judges, who on the basis of their study of records reflecting "the circumstances of particular proceedings," perceived a need for procedures in addition to notice and the opportunity for comment, and from the experience of agencies required to provide such additional procedures.

RECOMMENDATIONS

1. Agencies should afford interested persons the opportunity to participate as effectively as possible in notice-and-comment rulemaking proceedings. Therefore, in order to enlarge the opportunity for public participation and increase its effectiveness, agencies in appropriate circumstances should utilize procedures such as the following, which go beyond a single notice and opportunity to comment and supplement or particularize those listed as examples in Recommendation 72-5.[2]

a. Providing from the outset for the possibility of two cycles of notice-and-comment (i) when the agency anticipates that the issues raised by the rulemaking will be unusually complex, or (ii) when it is in the public interest to utilize the initial notice of proposed rulemaking to give only a general description of the subjects and issues involved in the proceeding and to invite public comment upon these subjects and issues; provided that at the conclusion of the first cycle the agency may take any action within its powers. In addition an agency may at any time announce, as by an "advance notice of proposed rulemaking", that it intends to issue a notice of rulemaking, and in such announcement solicit comments and suggestions with respect to the contents of such notice.

b. Providing for a second cycle of notice-and-comment or by notice providing an opportunity for additional comment in any proceeding when comments filed in the proceeding, or the agency's response to such comments, present new and important issues or serious conflicts of data. An agency should consider the desirability of responding to comments as a means of exposing the agency's tentative views in order to enhance the usefulness of further comments by the public.

c. Incorporating in the notice of a notice-and-comment cycle a summation of the agency's current attitudes toward critical issues in the proceeding and a description of the data on which the agency relies, indicating where the data may be inspected.

d. Providing an explanation of the tests and other procedures followed by the agency and the significance the agency has attached to them, and allowing opportunity for comment thereon.[3]

e. Holding conferences open to the public, on adequate notice, when an opportunity for all interested groups (such as agency staff, directly affected persons, agency policymakers and public interest groups) to question one another would be effective in resolving, narrowing or clarifying the disputed issues.

f. Hearing argument and other oral presentation, when the presiding agency official or officials may ask questions, including questions submitted by interested persons.

Important circumstances tending to suggest the desirability of using such procedural devices are that (1) the scientific, technical or other data relevant to the proposed rule are complex; (2) the problem posed is so open-ended that an agency may profit from receiving diverse public views before publishing a proposed rule for final comment; and (3) the costs that errors in the rule may impose, including health, welfare and environmental losses imposed on the public and pecuniary expenses imposed on the affected industries and consumers of their products, are significant.

2. In rulemaking proceedings subject to notice-and-comment requirements agencies should give interested persons an opportunity to indicate issues of specific fact as to which they contend that cross-examination should be considered by the agency to be appropriate. Cross-examination, where permitted, should be strictly limited as to subject and duration.

3. An agency should employ any of the devices specified in paragraph 1 or permit cross-examination only to the extent that it believes that the anticipated costs (including those related to increasing the time involved and the deployment of additional agency resources) are offset by anticipated gains in the quality of the rule and the extent to which the rulemaking procedure will be perceived as having been fair.

6. Paragraph (b) of § 305.75-8 (41 FR 3985) is amended to read as follows:

§ 305.75-8 Internal Revenue Service Procedures: Tax Return Confidentiality (Recommendation No. 75-8).

* * * * *

(b) *General.* (1) Legislation should be enacted which would permit the disclosure of tax returns by the Internal Revenue Service only as authorized by express statute designating the persons to whom and the purposes for which disclosure, and limitations on use or redisclosure that shall govern such disclosure.

(2) Legislation should be enacted which would provide that tax returns pertaining to the tax liability of individuals and decedents are confidential and, except as specifically authorized by statute, shall not be disclosed by the Internal Revenue Service to the general public, or any individual member thereof, either at the initiative of the Internal Revenue Service or in response to a request for disclosure made to the Service by any member of the general public, provided that such prohibition shall not prevent disclosure by the Service of any tax return of an individual or a decedent upon a request duly made by such individual or his authorized representative or by the authorized representative of such decedent.

(3) Legislation should be enacted providing, as a general limitation on all tax return disclosure authority conferred on the Internal Revenue Service, that in making any authorized disclosure of a tax return to any person other than the taxpayer to whom the return pertains, the Service shall disclose no more information than is necessary to effectuate the purpose for which such disclosure is authorized and providing further that the Service shall establish administrative procedures designed to assure that every particular disclosure is made in strict accordance with the authority therefor and with such general limitation.

* * * * *

Dated: July 12, 1976.

RICHARD K. BERG,
Executive Secretary.

[FR Doc.76-20693 Filed 7-16-76;8:45 am]

[2] This Recommendation is addressed solely to agency process prior to the final promulgation of a rule. In addition, the agency statement of the basis and purpose of the rule incorporated in the rule when it is adopted should be clear and complete and should fully and fairly inform the public as to the basis and purpose of the rule.

[3] This may be accomplished, for example, in a public notice or by technical reports issued or relied upon by the agency and incorporated by reference in the proceeding.

Title 7—Agriculture

CHAPTER VI—SOIL CONSERVATION SERVICE, DEPARTMENT OF AGRICULTURE

SUBCHAPTER G—MISCELLANEOUS

PART 662—EQUIPMENT GRANTS TO CONSERVATION DISTRICTS

Termination of Equipment Grants Program

Notice of proposed termination of the Soil Conservation Service (SCS) equipment grants to conservation districts program was published in the FEDERAL REGISTER on January 12, 1976 (41 FR 1774).

Interested presons were invited to submit written data, views, or arguments on the proposed program termination. Pursuant to this notice, arguments were received both for and against the program termination and are summarized as follows:

A. *Against termination.* Responses were received from individuals and organizations in two states opposing termination of the program. Their arguments are summarized as follows:

1. In some areas, local contractors are not available at a reasonable cost to install soil and water conservation measures. Therefore, conservation districts must provide the needed conservation installation services to district cooperators.

2. Some local contractors will not undertake soil and water conservation work at any cost. Therefore, conservation districts are the only sources of supply for district cooperators to obtain needed conservation installation services.

3. There are some isolated areas in the nation where local contractors do not exist. It is too costly to obtain outside contractors due to the distance necessary to transport equipment and personnel. Therefore, conservation districts must provide conservation installation services

to make them available to district cooperators at a reasonable cost.

4. Granted equipment is needed to provide a source of revenue for conservation districts, thereby reducing need for additional tax revenues.

5. Conservation districts were formed on the basis of an equipment operation program. Without granted equipment, conservation districts will be forced out of business.

6. It is not fair that farmers be required to use high-priced private contractors.

7. The program should not be abolished, but extended by granting more equipment to conservation districts.

B. *For termination.* One argument was presented for terminating the program. It stated that the equipment grant program is a form of unfair government competition with the private business sector of the economy, and that termination of the program is consistent with the present national policy toward private business.

C. *SCS response.* SCS has always supported the policy that the installation of soil and water conservation measures be provided through the employment of private contractors. It was never the intent of the program to compete in any manner with private contractors and the equipment supply industry.

One of the purposes of the program since its beginning in the 1930's was to assist soil and water conservation work, where necessary, until the volume of work would support private contractors.

Nationally, the number of contractors involved in soil and water conservation work has increased to the point that the equipment grant program is virtually nonexistent in all but a few states. The program decline has been steady since the late 1950's. During fiscal year 1958, 25 SCS state offices granted equipment to districts valued at $11,370,000. During fiscal year 1975, only four state offices granted equipment valued at $324,000.

SCS revised its regulations on grants in July, 1974, to permit grants only if qualified contractors were not available, or if they were not interested in performing soil and water conservation work. Also, the revised regulations provided that grant eligibility determinations be published in local newspapers and in the FEDERAL REGISTER. Since the grant revision, the number of requests for equipment has continued to decline to the point where presently little grant activity exists. Furthermore, most of the recent grant determinations were challenged by local contractors and associations after publication. This is another indication that the program has achieved its goals. SCS experience and analysis indicates that SCS should no longer participate in an equipment grant program based on the premise that local contractors are not available, or are not interested in soil and water conservation work.

In addition, it has been the experience of SCS that there has been a reduction in the quantity and quality of federal excess equipment and materials available for grant. The availability of satisfactory grantable equipment will continue to decline in the predictable future in view of present federal property policies.

Because of the reasons stated herein, the Soil Conservation Service has determined that the equipment grant program is to be terminated effective July 1, 1976. Therefore, 7 CFR Part 662 is hereby revoked on this effective date.

Dated: July 12, 1976.

R. M. DAVIS,
Administrator.

[FR Doc.76-20725 Filed 7-16-76;8:45 am]

CHAPTER IX—AGRICULTURAL MARKETING SERVICE (MARKETING AGREEMENTS AND ORDERS; FRUITS, VEGETABLES, NUTS), DEPARTMENT OF AGRICULTURE

[Valencia Orange Reg. 535; Amdt. 1]

PART 908—VALENCIA ORANGES GROWN IN ARIZONA AND DESIGNATED PART OF CALIFORNIA

Limitation of Handling

This regulation increases the quantity of California-Arizona Valencia oranges that may be shipped to fresh market during the weekly regulation period July 9-15, 1976. The quantity that may be shipped is increased due to improved market conditions for California-Arizona Valencia oranges. The regulation and this amendment are issued pursuant to the Agricultural Marketing Agreement Act of 1937, as amended, and Marketing Order No. 908.

(a) *Findings.* (1) Pursuant to the marketing agreement, as amended, and Order No. 908, as amended (7 CFR Part 908), regulating the handling of Valencia oranges grown in Arizona and designated part of California, effective under the applicable provisions of the Agricultural Marketing Agreement Act of 1937, as amended (7 U.S.C. 601-674) and upon the basis of the recommendation and information submitted by the Valencia Orange Administrative Committee, established under the said amended marketing agreement and order, and upon other available information, it is hereby found that the limitation of handling of such Valencia oranges, as hereinafter provided, will tend to effectuate the declared policy of the act.

(2) The need for an increase in the quantity of oranges available for handling during the current week results from changes that have taken place in the marketing situation since the issuance of Valencia Orange Regulation 535 (41 FR 27970). The marketing picture now indicates that there is a greater demand for Valencia oranges than existed when the regulation was made effective. Therefore, in order to provide an opportunity for handlers to handle a sufficient volume of Valencia oranges to fill the current demand thereby making a greater quantity of Valencia oranges available to meet such increased demand, the regulation should be amended, as hereinafter set forth.

(3) It is hereby further found that it is impracticable and contrary to the public interest to give preliminary notice, engage in public rule-making procedure, and postpone the effective date of this amendment until 30 days after publication thereof in the FEDERAL REGISTER (5 U.S.C. 553) because the time intervening between the date when information upon which this amendment is based became available and the time when this amendment must become effective in order to effectuate the declared policy of the act is insufficient, and this amendment relieves restriction on the handling of Valencia oranges grown in Arizona and designated part of California.

(b) *Order, as amended.* The provisions in paragraph (b)(1) (i), and (ii) of § 908.835 (Valencia Orange Regulation 535 (41 FR 27970)) are hereby amended to read as follows:

"(i) District 1: 311,000 cartons;
"(ii) District 2: 364,000 cartons."

(Secs. 1-19, 48 Stat. 31, as amended; 7 U.S.C. 601-674)

Dated: July 14, 1976.

CHARLES R. BRADER,
Acting Director, Fruit and Vegetable Division, Agricultural Marketing Service.

[FR Doc.76-20723 Filed 7-16-76;8:45 am]

CHAPTER X—AGRICULTURAL MARKETING SERVICE (MARKETING AGREEMENTS AND ORDERS; MILK), DEPARTMENT OF AGRICULTURE

[Milk Order No. 4]

PART 1004—MILK IN THE MIDDLE ATLANTIC MARKETING AREA

Order Suspending Certain Provisions

Correction

In FR Doc. 76-20139, appearing at page 28785 in the issue of Tuesday, July 13, 1976, the following line, appearing between the second and third paragraphs, should be deleted:

§ 1004.7 [Amended]

Title 13—Business Credit and Assistance

CHAPTER I—SMALL BUSINESS ADMINISTRATION

[Revision 2]

PART 105—STANDARDS OF CONDUCT

The Small Business Administration revises 13 CFR Part 105 to read as follows:

Sec.
105.101 Purpose and scope.
105.201 Definitions.
105.301 General requirements.

RESTRICTIONS RELATING TO FORMER SBA EMPLOYEES

105.401 Acting as attorney or agent in matter previously under the official responsibility of the former employee.
105.402 Acting as attorney or agent in matter in which former employee personally participated.
105.403 Employment of former employee by person previously the recipient of SBA assistance.

Sec.
105.404 SBA assistance to person employing former SBA employee.
105.405 Cross references.

RESTRICTIONS RELATING TO PRESENT SBA EMPLOYEES

105.501 Involvement in matters in which Government has substantial interest.
105.502 Compensation relating to official duties from nongovernment source.
105.503 Gratuities from persons dealing with SBA.
105.504 Other gifts and gratuities.
105.505 Situations creating appearance of conflict of interest.
105.506 Personal interests in firms or matters having SBA involvement.
105.507 Use of Government property and supplies.
105.508 Conversion of public and other property.
105.509 Distortion of records; false statements.
105.510 Outside employment and activities.
105.511 Statements of employment and financial interests.
105.512 Political activity of employees.
105.513 Striking against the Government.
105.514 Disclosure of official information.
105.515 Duty to report irregularities.
105.516 Requirement to follow applicable rules and regulations.
105.517 Gambling.
105.518 Payment of financial obligations.
105.519 Recommendation of private person.

RESTRICTIONS RELATING TO OTHER GOVERNMENT OR QUASI-GOVERNMENT ORGANIZATIONS

105.601 Assistance to officers or employees of other Government organizations.
105.602 Assistance to employees or members of Quasi-Government organizations.
105.701 Penalties.
105.801 Standards of Conduct Committee.
105.802 Standards of Conduct Counselors.
105.901 Statutory and other regulatory provisions.

AUTHORITY: Sec. 5; 72 Stat. 385 (15 USC 634); E.O. 11222, 3 CFR 1964–65; Comp. 5 CFR 735.104.

§ 105.101 Purpose and scope.

(a) This part prescribes standards of conduct for all SBA employees relating to possible conflicts between their official duties or the public interest and their private interests.

(b) This part deals with SBA administrative standards and does not purport to be interpretative of requirements imposed by analogous criminal statutes or regulations or directions of other proper authorities. Definitive assistance with respect to such requirements can be obtained from the Department of Justice regarding criminal statutes and from the administering department regarding other statutes, regulations and directives.

§ 105.201 Definitions.

(a) "SBA" means the Small Business Administration.

(b) "Administrator" means the Administrator of the Small Business Administration.

(c) "Employee" means an officer or employee of the Small Business Administration, regardless of his grade, status or place of employment, including employees on leave with pay or on leave without pay other than those on extended military leave. Unless stated otherwise, "Employee" shall include those within the category of "Special Government Employee."

(d) "Special Government Employee" means an officer or employee of SBA, who is retained, appointed or employed to perform temporary duties on a full-time or intermittent basis, with or without compensation, for not to exceed 130 days during any period of 365 consecutive days.

(e) "Government" means the Government of the United States.

(f) "Person" means an individual, a corporation, a company, an association, a firm, a partnership, a society, a joint stock company, or any other organization or institution.

(g) "Member of household" means (1) spouse and minor children of an employee; and (2) all blood relations of the employee and of his spouse who reside in the same place of abode with the employee.

(h) The use of the masculine gender throughout this part shall mean masculine or feminine.

(i) "SBA Assistance" means financial, contractual, managerial or other aid, including size determinations, granted by SBA under the Small Business Act, as amended, the Small Business Investment Act, as amended and other relevant law. For the purposes of this part, this term shall also include an express decision to compromise or defer possible litigation or other adverse action.

(j) "Department" means any department, agency, independent establishment or wholly-owned corporation of the U.S. Government.

(k) "Standards of Conduct Committee" is that administrative body within SBA which administers and interprets standards of employee conduct. Its function and composition are explained in § 105.801 herein.

§ 105.301 General requirements.

(a) No employee in the conduct of official business shall grant preferential treatment to or discriminate against any person.

(b) In the performance of official duties, the interest of the Government is paramount and takes precedence over the private pecuniary and other interests of all employees and third parties.

(c) In the conduct of official business, the personal opinions of every employee must be subordinated to established Government policy and SBA procedures. No employee shall substitute his personal opinions or judgments for established Government policy.

(d) No employee shall engage in criminal, infamous, dishonest, immoral, disgraceful or other conduct prejudicial to the Government.

(e) Every employee shall conduct himself in such a manner that the work of SBA will be effectively and efficiently accomplished.

(f) Every employee shall observe the full requirements of courtesy, consideration and promptness in performing his official duties.

(g) No employee shall use public office to obtain or coerce private gain for himself or any other person.

(h) No employee shall make a Government decision outside official channels.

(i) No employee shall take any action which would adversely affect the confidence of the public in the integrity of the Government.

RESTRICTIONS RELATING TO FORMER SBA EMPLOYEES

§ 105.401 Acting as agent in matter previously under official responsibility of former employee.

No former employee, within one year after his employment with SBA has ceased, may appear before SBA or in any proceeding conducted by or on behalf of SBA, or in which SBA has an interest, as agent or attorney in connection with any claim, determination or other matter which was under his official responsibility within one year prior to the termination of his employment.

§ 105.402 Acting as attorney or agent in matter in which former employee personally participated.

No former employee may ever, after his employment with SBA has ceased, appear as agent or attorney before SBA or in any proceeding conducted by or on behalf of SBA, or in which SBA has an interest, in connection with any claim, determination or other specific matter in which he participated personally and substantially while an employee through decision, approval, disapproval, recommendation, the rendering of advice, investigation or otherwise.

§ 105.403 Employment of former employee by person previously the recipient of SBA assistance.

No former employee, who occupied a position involving discretion or who exercised discretion with respect to the granting of SBA assistance or the administration of such assistance, may accept or retain a position as employee, partner, agent, attorney or otherwise with a concern which has received this SBA assistance, or with a person who provides significant legal, accounting or other services to the concern for a period of two years following the date of such assistance if—

(a) The date of such assistance or such administrative act with respect thereto was within the period of the employee's term of employment, or;

(b) The date of such assistance or such administrative act with respect thereto was within one year following the termination of such employment.

Failure of a recipient of SBA assistance to comply with these provision may result, in the discretion of SBA, in the requirement for immediate repayment of SBA financial assistance, the immediate termination of other assistance involved or other appropriate action.

§ 105.404 SBA assistance to person employing former SBA employee.

(a) SBA shall not provide assistance to any person who has as an employee, owner, partner, attorney, agent, owner of stock, officer, director, creditor of debtor, any individual who, within one year prior to the request for such assistance was an SBA employee, without the prior approval of the Standards of Conduct Committee.

(b) In reviewing applications for assistance, the Sandards of Conduct Committee will consider:

(1) The relationship of the former employee with the applicant concern;

(2) The nature of the SBA assistance requested;

(3) The position held by the former employee with SBA and its relationship to the assistance requested; and

(4) The appearance of a possible conflict of interest that might arise if the assistance were granted.

§ 105.405 Cross references.

There are statutory provisions which are relevant to the obligations of and restrictions upon former employees. Some of these statutory provisions are:

(a) 18 USC 207.

(b) 15 USC 642.

RESTRICTIONS RELATING TO PRESENT SBA EMPLOYEES

§ 105.501 Involvement in matters in which Government has substantial interest.

(a) No employee, otherwise than in the proper discharge of his official duties, shall act as agent, attorney or in any other representative capacity before a Department, regardless of whether compensation is received, in connection with any matter in which the United States is a party or has a direct and substantial interest. This provision shall be applicable to a Special Government Employee only to the extent set forth in paragraph (c) of this section.

(b) No employee, or person acting on behalf of said employee, otherwise than in the proper discharge of the employee's official duties, shall receive, agree to receive or solicit compensation for services rendered or to be rendered, in connection with any matter in which the United States is a party or has a direct and substantial interest. This provision shall be applicable to a Special Government Employee only to the extent set forth in paragraph (c) of this section.

(c) A Special Government Employee is subject to the foregoing paragraphs (a) and (b) of this section in connection with a particular matter: (1) In which he has at any time participated personally and substantially or which was under his official responsibility as an employee, or (2) which is pending at SBA while he is serving as a Special Government Employee. This provision (c) (2) does not apply where the Special Government Employee has served no more than 60 days with SBA during the immediately preceding period of 365 consecutive days.

(d) Notwithstanding paragraphs (a), (b) and (c) of this section an employee:

(1) May act, with or without compensation, as agent or attorney for his parents, spouse, child or any person for whom, or any estate for which, he is serving as guardian, executor, administrator, trustee or other personal fiduciary, except in those matters in which he has participated personally and substantially or which were under his official responsibility as an employee. In order to determine the possibility of any conflict of interest and the appearances of the arrangement, this function must first be reviewed and approved by the Standards of Conduct Committee.

(2) If not inconsistent with the faithful and full performance of his duties, as determined by his supervisor, may act without compensation as agent or attorney for any individual who is the subject of disciplinary, loyalty or other personnel proceedings in connection with those proceedings.

(e) There are statutory provisions which are relevant to the restrictions upon representative functions of a Government employee not performed as part of his official duties. Some of these statutory provisions are:

(1) 18 USC 203.

(2) 18 USC 205.

§ 105.502 Compensation relating to official duties from nongovernment services.

(a) No employee shall receive any salary, contribution to or supplementation of salary, as compensation for his services to SBA as an employee from any source other than the Government, except as may be authorized by law.

(b) No employee shall receive, agree to receive, request or solicit anything of value for himself or for any other person in return for committing, or aid in committing, or to colluding in, or allowing, any fraud, or making the opportunity for the commission of any fraud, on the United States or for being induced to do or omit to do any act in violation of his official duty.

(c) No employee shall receive, agree to receive, request or solicit anything of value for himself or any other person, otherwise than as provided by law in the proper discharge of his official duties, to support or influence decisions for the hiring of any person as an employee of SBA or any other Department.

(d) Nothing in this section precludes an employee from accepting travel or subsistence expenses from persons other than the Government in connection with proper outside activities conducted on his own time when such outside activities are approved under these regulations. Such travel or subsistence expenses, however, may not be accepted in connection with official duties or activities performed at the direction of SBA, except as otherwise authorized by law.

(e) There are statutory provisions which are relevant to the obligation of and restrictions upon compensation to employees from nongovernment sources. Some of these provisions are:

(1) 18 USC 209.

(2) 18 USC 201.

(3) 18 USC 211.

(4) Decision of the Comptroller General; March 7, 1967; B-128527.

§ 105.503 Gratuities from persons dealing with SBA.

(a) Except as otherwise permitted in this section, no employee or member of his household shall receive, agree to receive, request or solicit, directly or indirectly, any gift, gratuity, favor, entertainment, loan or any other thing of monetary value from a person who:

(1) Has, or is seeking to obtain, any SBA Assistance.

(2) Is a financial institution which participates with SBA in any of its lending or other programs or is an officer, director, agent, representative or significant equity owner of such an institution.

(3) Conducts operations or activities regulated by SBA.

(4) Has interests that may be substantially affected by the performance or nonperformance of the employee's official duties.

(b) The prohibitions of paragraph (a) of this section shall not apply to:

(1) Gifts, entertainment and favors of a relatively nominal value when the circumstances make it clear that it is wholly a personal relationship rather than the business of the persons concerned which are the motivating factors.

(2) The acceptance of food and refreshments of a nominal value on infrequent occasions when reasonably related to the performance of the employee's official duties. Acceptance of such food or refreshments on a regular or routine basis is prohibited.

(3) The acceptance of loans from banks and other financial institutions on customary terms to finance usual activities of employees, such as home mortgage loans;

(4) The acceptance of unsolicited advertising or promotional material, such as pens, pencils, calendars and other items of nominal value.

(c) Generally, an employee may not accept travel or subsistence expenses from a private person while traveling on official business under SBA orders. Payment for such expenses normally is made by SBA in accordance with applicable laws and regulations relating to official travel. Employees faced with questions relating to this rule or exceptions thereto should consult the appropriate SBA Standards of Conduct Counselor.

§ 105.504 Other gifts and gratuities.

(a) No employee shall:

(1) Solicit a contribution from another employee for a gift to an official superior.

(2) Make a donation or gift to or for the benefit of an official superior.

(3) Receive a gift from an employee receiving less pay and having less rank than himself.

(b) The foregoing paragraph (a) of this section does not prohibit a voluntary gift of nominal value or donation in a

nominal amount made on a special occasion, such as marriage, illness, separation or retirement.

(c) No employee shall accept a gift, decoration or other thing from a foreign government except as authorized by statute.

(d) There are statutory provisions relevant to the question of gifts to and from employees. Some of these provisions are:

(1) 5 USC 7342.

(2) 5 USC 7351.

§ 105.505 Situations creating a conflict of interest or the appearance thereof.

(a) No employee shall engage in any action, whether or not specifically prohibited, which might result in or create the appearance of:

(1) Using public office to obtain or coerce personal gain for himself or any other person.

(2) Giving preferential treatment to any person.

(3) Impeding Government efficiency or economy.

(4) Losing independence or impartiality.

(5) Making a Government decision outside official channels.

(6) Adversely affecting the confidence of the public in the integrity of the Government.

§ 105.506 Personal interests in firms or matters having SBA involvement.

(a) Except as otherwise provided in paragraph (e) of this section, no employee or member of his household shall purchase, or direct the purchase of, directly or indirectly, any interest in the persons specified in paragraph (c) of this section.

(b) (1) Except as otherwise provided in paragraph (e) of this section, without the approval of the Standards of Conduct Committee, no employee or member of his housesold shall own or otherwise hold directly or indirectly, whether acquired prior to or during the period of his SBA employment, any interest in the persons specified in paragraph (c) of this section:

(2) Application for approval under this subsection shall be submitted to the Standards of Conduct Committee no later than 60 calendar days after entering upon SBA employment where the employee's interest in the concern arose prior to his SBA employment. Where the interest of the employee arose during the period of his SBA employment, application shall be made no later than 60 calendar days after the acquisition of such interest.

(c) Proscribed persons for the purposes of paragraphs (a) and (b) of this section:

(1) A small business investment company licensed by SBA;

(2) A person for which a small business investment company license application is pending before SBA;

(3) A person which has received SBA Assistance within the preceding 2 years;

(4) A person which presently has outstanding SBA Assistance;

(5) A person which has pending an application for SBA Assistance;

(6) Institutions which participate with SBA in any of its financial assistance programs.

(d) In reviewing applications for approval under paragraphs (b), (f) and (g) of this section, the Standards of Conduct Committee will consider all relevant factors, including:

(1) The relationship between the official SBA function of the employee and the SBA Assistance, decision or other matter in question;

(2) The significance of the employee's or other person's interest in the concern relative to his other assets and/or interests;

(3) The significance of the employee's or other person's interest in the concern relative to the other equity and/or interests in the concern;

(4) Whether the employee's or other person's interest in the concern is substantial regardless of its significance relative to his other assets and/or interests or to the other assets and/or interests of the concern.

(e) Notwithstanding other provisions herein, an employee or member of his household may purchase, direct the purchase of, own or otherwise hold, directly or indirectly, any interest in a person which owns stock or has other interests in a small business investment company licensed by SBA when:

(1) Such employee or member of his household does not participate in the management of or in the selection of investments for or by such person; and

(2) Such employee and/or member of his household does not own 1 percent or more of the equity of, or other interest in, such person; and

(3) The person has not invested more than 10 percent of its assets in small business investment companies licensed by SBA.

(f) (1) Without the prior written approval of the Standards of Conduct Committee, no employee shall participate as an SBA employee through decision, approval, disapproval, recommendation, the rendering of advice, investigation or otherwise in any claim, determination or other matter in which he, a member of his household, a partner, an organization in which he has an ownership, employment or other interest or any person with whom he has an arrangement or is arranging for prospective employment, has an interest.

(2) In reviewing applications for approval under this provision, the Standards of Conduct Committee will include as guidelines the criteria set forth in paragraph (d) of this section.

(3) In addition to the foregoing, where the interest of the employee is a financial interest, he shall not participate in the matter in question without also obtaining an advance written determination from the Administrator that such financial interest is not so substantial that it is likely to affect the integrity of the services which the Government may expect from such employee.

(4) There are statutory provisions relevant to the question of employee participation in official matters in which he has an interest. These include 18 USC 208.

(g) (1) Without the prior written approval of the Standards of Conduct Committee, no SBA assistance, other than Disaster loans under subparagraphs (1) and (2) of section 7(b) of the Small Business Act, shall be furnished to a person when the sole proprietor, partner, officer, director or significant stockholder is an SBA employee or a member of his household.

(2) In reviewing applications for approval under this provision, the Standards of Conduct Committee will include the guidelines set forth in paragraph (d) of this section.

§ 105.507 Use of Government property and supplies.

(a) No employee shall use Government property or supplies of any kind except for officially approved activities. This prohibition includes the use of a Government vehicle and the use of official penalty mail.

(b) Every employee also has a positive responsibility to protect and conserve all Government property and supplies entrusted to him.

(c) There are statutory provisions relating to the use of Government property and supplies. These include:

(1) 31 USC 638(a) relates to the use of Government vehicles.

(2) 39 USC 3202, 3203 relates to the use of official penalty mail.

§ 105.508 Conversion of public and other property.

(a) No employee shall convert or attempt to convert to his own use money or property of another coming into his possession or public monies or property.

(b) There are statutory provisions concerning embezzlement and conversion. These include:

(1) 18 USC 643.

(2) 18 USC 654.

(3) 15 USC 645.

§ 105.509 Distortion of records; false statements.

(a) No employee shall:

(1) While acting as an SBA employee, make false records or accounts.

(2) Falsify any record, account, paper or other thing filed with or relating to Government or other public business.

(3) Remove, obliterate or destroy any record, account, paper or other thing filed with or relating to Government or other public business.

(4) While acting as an SBA employee, knowingly make any false statement to the detriment of the Government or another employee.

(5) Attempt to effect any of the foregoing.

(b) There are statutory provisions concerning the distortion of public records. These include:

(1) 18 USC 2071.

(2) 18 USC 2073.

(3) 15 USC 645(a).

§ 105.510 Outside employment and activities.

(a) Except with the written approval of the Director of Personnel, no employee

shall engage in any outside business, employment or vocation. This limitation applies regardless of whether a fee, gift, salary or other compensation is received for the activity. In his discretion, the Director of Personnel may refer requests for approval to the Standards of Conduct Committee for its recommendations.

(b) In reviewing applications for approval under this section, the Director of Personnel and the Standards of Conduct Committee will consider all relevant factors, including:

(1) Where there is a fee, gift or other compensation whether it might result in, or create the appearance of, a conflict of interest;

(2) Whether the outside activity would tend to impair an employee's mental or physical capacity to perform his Government duties and responsibilities in an acceptable manner;

(3) Whether the outside activity will occur during the employee's duty hours;

(4) Whether, in the course of his outside activity, the employee might have occasion to discuss the business or affairs of any SBA applicant for or recipient of assistance;

(5) Whether the employee's name and/or his position with SBA will be used in any advertisement, promotion or letterhead in connection with the outside activity;

(6) Whether the outside activity could create the appearance of a conflict of interest or otherwise adversely affect the confidence of the public in the integrity of the Government;

(7) Whether the outside activity is otherwise not compatible with the full and proper discharge of the duties and responsibilities of his Government employment.

(c) Unless otherwise limited by law or this regulation, employees are encouraged to engage in outside teaching, lecturing and writing. Such outside activity, however, shall not be approved if it is dependent on disclosure of information obtained as a result of the employee's Government employment, unless:

(1) The information has been made available to the general public or will be made available upon request; or

(2) The Administrator of SBA makes a written determination that the use of nonpublic information is in the public interest.

(d) (1) No employee shall engage in any outside employment or activity with a state or local government except in accordance with Chapter 734 of the Federal Personnel Manual, and with the written approval of the Standards of Conduct Committee. The guidelines used by the Committee in considering such requests are set forth in paragraph (b) of this section.

(2) This subsection does not preclude an employee from:

(i) Participation in political activities not otherwise proscribed by law. Employees should, however, be aware of the limitations upon such activities set forth in Subchapter III of Chapter 73 of Title 5, United States Code and § 105.512 of these regulations.

(ii) Participation in the affairs of, including the acceptance of a public service award from, a charitable, professional, social, civic or similar organization.

§ 105.511 Statements of employment and financial interests.

(a) These statements shall be submitted by:

(1) All employees paid at Executive Levels IV and V of the Executive Schedule in Subchapter II of Chapter 53 of Title 5, United States Code.

(2) All employees, Grades GS-18 and GS-17.

(3) All Regional Directors, District Directors, and Branch Managers.

(4) All other employees who are in positions of discretion involving the granting of SBA Assistance as defined in § 105.201(i). These positions generally are those in which employees take final action on behalf of the Agency or make recommendations frequently adopted as final Agency action or take actions or make frequently adopted recommendations immediately leading to final Agency action regarding contracting, regulating or licensing small business investment companies, granting financial assistance, issuing certificates of competency or making size determinations. The determination of which positions fall within this category shall be made pursuant to paragraph (d) (1) of this section. These determinations will be reviewed by the appropriate Standards of Conduct Counselors.

(b) These statements shall:

(1) Include interests of members of an employee's household;

(2) Be submitted on the behalf of the employee by a trustee or other person where the required information is not known by the employee but is known by such trustee or other person;

(3) Contain the information required by Subchapter 4 and Appendix D of Part 735 of the Federal Personnel Manual. Agency forms may be obtained from the Office of Personnel or field administrative officers; and

(4) Include all financial and outside employment interests, except that information is not required relating to an employee's connections, as a member, with a charitable, professional, social, civic, political or similar nonbusiness enterprise. For the purposes of this provision, an educational or other organization, doing research and development or related work involving Government grants or contracts is deemed, to that extent, as a "business enterprise" and as such must be included in the employee's statement.

(c) Statements shall be submitted by an employee within 30 days after assuming a position subject to this section. In addition, an annual report is required as of June 30 of every year and shall be submitted no later than July 31 of every year. If no changes from the prior report occur, a negative report is required.

(d) (1) Determinations regarding who is required to submit a statement under paragraph (a) (4) of this section shall be made by the appropriate Associate Administrator, Assistant Administrator, Regional Director, the General Counsel, the Deputy Administrator and any other Office Director not subject to any of the foregoing office directors for those employees under their respective jurisdiction. The covered employees shall thereupon be notified by their respective office directors designated above. These determinations shall also be submitted by the office director to the appropriate SBA Standards of Conduct Counselor no later than June 30 of each year.

(2) Any employee who contends that he is improperly required to file a Statement of Employment and Financial Interests under this section may request a review of his complaint under the SBA Grievance Procedure, as set forth in SOP 37 71.

(e) Statements required by this section and determinations required under paragraph (d) of this section shall be submitted:

(1) To the SBA Standards of Conduct Counselor with respect to Central Office employees;

(2) To the Regional Standards of Conduct Counselor with respect to employees within his region except that statements required from the Regional Standards of Conduct Counselor shall be submitted to the SBA Standards of Conduct Counselor.

(f) (1) The appropriate Standards of Conduct Counselor shall review the statements submitted to him to determine the existence of any possible conflicts or appearances of possible conflicts. Where such a conflict exists or appears to exist, the Counselor shall provide the employee an opportunity to explain.

(2) In the event the real or apparent conflict cannot be resolved by the Standards of Conduct Counselor, the matter shall be submitted to the Standards of Conduct Committee. The Committee shall investigate and analyze the problem and then report the matter, together with its recommendations to the Administrator.

(3) If the Administrator determines that the employee has an interest conflicting with his official duties, he may direct remedial action which may include, but is not limited to:

(i) Changes in assigned duties;

(ii) Divestment by the employee of his conflicting interests;

(iii) Disqualification for particular assignments;

(iv) Disciplinary action.

(g) Each Statement of Employment and Financial Interests shall be held in confidence by the recipient and no information may be disclosed except as the Civil Service Commission or the Administrator may determine for good cause shown.

(h) (1) The statements required herein are not a substitute for, or in derogation of, any similar requirement imposed by law, order or regulation.

(2) The filing of a statement herein in no way permits an employee or any

other person to participate in any matter, make or hold any investment or engage in any activity prohibited or restricted by law, order or regulation.

(3) Notwithstanding the filing of a statement herein, every employee at all times shall avoid acquiring a financial interest or taking any action that could result in a conflict or otherwise in a violation of this regulation or any other law, order or regulation.

§ 105.512 Political activity of employees.

(a) No employee shall use his official authority to coerce or influence the political action of any person.

(b) No employee shall use his official authority or influence for the purpose of interfering with or affecting the result of an election or the nomination of a candidate for an election.

(c) No employee, except the Administrator, shall take an active part in political management or political campaigns within the meaning of 5 USC 7324 and 5 CFR Part 733.

(d) There are statutory provisions concerning political activity of employees. These include:

(1) Title 5, Subchapter III, Chapter 73, United States Code.

(2) 18 USC 595.

§ 105.513 Striking against Government.

(a) No employee shall strike against the Government.

(b) There are statutory provisions concerning strikes against the Government. They include:

(1) 18 USC 1918.

(2) 5 USC 7311.

§ 105.514 Disclosure of official information.

(a) No employee shall disclose any official information not authorized by law relating to trade secrets, processes, operations, statistical or income data or other confidential information of any person or firm.

(b) No employee shall disclose any unauthorized information concerning any SBA plan or action which will or might affect the value of securities.

(c) No employee shall utilize unauthorized or "inside" information to invest or speculate directly or indirectly, or otherwise to advance his or another's private interests. For the purposes of this section, "inside information" means information obtained under Government authority which has not become part of the body of public information.

(d) There are statutory provisions concerning the disclosure of official information. These include:

(1) 50 USC 783.

(2) 18 USC 1905.

(3) 15 USC 645(b).

§ 105.515 Duty to report irregularities.

(a) Every employee shall immediately report to the Director, Office of Personnel and the Director, Office of Security and Investigations any acts of malfeasance or misfeasance or other irregularities, either actual or suspected, arising in connection with the performance by SBA of any of its official functions.

§ 105.516 Applicable rules and directions.

(a) Every employee shall follow all agency rules, regulations, operating procedures, instructions and other proper directions in the performance of his official functions.

§ 105.517 Gambling.

(a) No employee, while on official duty or on Government owned or leased property, shall participate in or operate any gambling activity.

(b) This prohibition shall not apply to activities conducted by employee welfare or similar organizations if prior written approval therefor is obtained from the Director of Personnel.

§ 105.518 Payment of financial obligations.

(a) Each employee shall pay his just financial obligations in a proper and timely manner. This is especially important in the case of Federal, State and local taxes.

(b) For the purposes of this provision, "just financial obligations" means those acknowledged by the employee, reduced to judgment by a court or imposed by law such as Federal, State or local taxes. In the event of a dispute, SBA will not determine the validity or amount of a debt.

(c) For the purposes of this provision, "in a proper and timely manner" means a manner which does not reflect adversely upon SBA, the Government or the employee in his official capacity.

§ 105.519 Recommendations of private person.

(a) No employee shall recommend or suggest the use of any nongovernmental person to provide any service as agent, attorney or otherwise in connection with negotiations with or other involvement with SBA or any other Government department.

RESTRICTIONS RELATING TO OFFICERS OR EMPLOYEES OF OTHER GOVERNMENT OR QUASI-GOVERNMENT ORGANIZATIONS

§ 105.601 Assistance to officers or employees of other Government organizations.

(a) No SBA Assistance, other than Disaster loans under subparagraphs (1) and (2) of section 7(b) of the Small Business Act, shall be furnished to a person when its sole proprietor, partner, officer, director or stockholder with a 10 percent or more interest, or a member of his household, is an employee of another Government department having a grade of GS-13 or its equivalent or higher in the case of civilian employees, or the rank of major or lieutenant commander or its equivalent or higher in the case of military personnel, without a prior written statement of no objection by the pertinent department or military service.

(b) (1) Without the approval of the Standards of Conduct Committee, no SBA assistance, other than disaster loans under subparagraphs (1) and (2) of section 7(b) of the Small Business Act, shall be furnished to a person:

(i) When its officer, director or stockholder with a 10 percent or more interest, or a member of his household, is a member of Congress;

(ii) When its sole proprietor, partner, officer, director or stockholder with a 10 percent or more interest, or a member of his household, is an appointed official or employee of the legislative or judicial branch of the Government.

(2) There are statutory provisions relevant to the question of assistance to officials of the United States Government. These include:

(i) 18 USC 431.

(ii) 18 USC 433.

(iii) 41 USC 22.

§ 105.602 Assistance to employees or members of quasi-Government organizations.

(a) Without the prior written approval of the Standards of Conduct Committee, no SBA Assistance other than Disaster loans under subparagraphs (1) and (2) of section 7(b) of the Small Business Act, shall be furnished to a person when its sole proprietor, partner, officer, director or stockholder with a 10 percent or more interest, or a member of his household, is a member or employee of a Small Business Advisory Council or is a SCORE or ACE volunteer.

(b) In reviewing applications for approval under this provision, the Standards of Conduct Committee may consider, among other factors, the possibilities that the granting of the assistance might result in or create the appearance of giving preferential treatment, the loss of complete independence or impartiality or adversely affecting the confidence of the public in the integrity of the Government.

§ 105.701 Penalties.

Any employee guilty of violating any of the provisions in this regulation may be subject to disciplinary action, including dismissal or suspension from SBA employment, in addition to other penalties provided by law.

§ 105.801 Standards of Conduct Committee.

(a) The Standards of Conduct Committee shall:

(1) Advise and give direction in the administration of this regulation and any other rules, regulations or directives dealing with conflicts of interest and ethical standards of SBA employees;

(2) Make decisions on specific requests for guidance from the Director of Personnel and from others in connection with matters relating to standards of conduct;

(b) The Standards of Conduct Committee shall be comprised of:

(1) The General Counsel or, in his absence, the Deputy General Counsel, who shall act as Chairman of the Committee;

(2) The Assistant Administrator for Administration or, in his absence, the Director of Budget and Finance;

(3) The Associate Administrator for Operations or, in his absence, the Deputy Associate Administrator for Operations.

§ 105.302 Standards of Conduct Counselors.

(a) The SBA Standards of Conduct Counselor shall be the Associate General Counsel for Interagency Affairs. He shall be assisted by a Regional Standards of Conduct Counselor for each SBA Region. The Regional Counsel shall be the Regional Standards of Conduct Counselor for each Region.

(b) The SBA Standards of Conduct Counselors or their delegatees shall:

(1) Provide general advice, assistance and guidance to employees concerning these Regulations;

(2) In coordination with the Director of Personnel and his delegatees, monitor the Standards of Conduct Program within their respective areas and provide required reports thereon; and

(3) Review Statements of Employment and Financial Interests as required under Section 105.511 herein. Each Regional Standards of Conduct Counselor shall provide an annual report on filing requirements and compliance therewith within his Region to the Associate General Counsel for Interagency Affairs as of September 1 of each year.

(c) Each employee shall be periodically informed by the director of his office of the name, address and telephone number of the Standards of Conduct Counselor whom he may contact for advice and assistance.

(d) Where a specific ruling is requested by or required from an employee regarding a particular situation or set of facts, the request should be directed through the Standards of Conduct Counselor to the Standards of Conduct Committee.

§ 105.901 Statutory and other regulatory provisions.

The attention of all employees is also directed to the following statutory and other legal provisions:

(a) House Concurrent Resolution 175, 85th Congress 2nd Session, 72 Stat. B12, the "Code of Ethics for Government Service."

(b) Chapter 11 of Title 18, United States Code, relating to bribery, graft, and conflicts of interest.

(c) The prohibition against lobbying with appropriated funds (18 USC 1913).

(d) The prohibition against disloyalty and striking (5 USC 7311, 18 USC 1918).

(e) The prohibition against the employment of a member of a Communist organization (50 USC 784).

(f) The prohibitions contained in the Freedom of Information Act against failing to disclose information disclosure of which is required by that Act (5 USC 552(a)(4)(F)).

(g) The prohibitions against: (1) The disclosure of classified information (18 USC 798, 50 USC 783); (2) the disclosure of confidential information (18 USC 1905); and (3) disclosure of information which is restricted by the Privacy Act (5 USC 552a(i)(1)).

(h) The provision relating to the habitual use of intoxicants to excess (5 USC 7352).

(i) The prohibition against the misuse of a Government vehicle (31 USC 638a (c)).

(j) The prohibition against the misuse of the franking privilege (18 USC 1719).

(k) The prohibition against the use of deceit in an examination or personnel action in connection with Government employment (18 USC 1917).

(l) The prohibition against fraud or false statements in a Government matter (18 USC 1001).

(m) The prohibition against mutilating or destroying a public record (18 USC 2071).

(n) The prohibition against counterfeiting and foregoing transportation requests (18 USC 508).

(o) The prohibitions against: (1) Embezzlement of Government money or property (18 USC 641); (2) failing to account for public money (18 USC 643); and (3) embezzlement of the money or property of another person in the possession of an employee by reason of his employment (18 USC 654).

(p) The prohibitions against political activities in Subchapter III of Chapter 73 of Title 5, United States Code and 18 USC 602, 607, and 608.

(q) The prohibitions against: (1) Embezzling or misapplying funds and securities, (2) making false reports with intent to defraud, (3) receiving money or profit fraudulently through act of SBA and (4) making profit out of information about value of securities of companies receiving assistance (15 USC 645).

This Part 105 was approved by the Civil Service Commission on June 11, 1976.

Dated: July 12, 1976.

Effective Date. This Part 105 shall become effective on July 19, 1976.

MITCHELL P. KOBELINSKI,
Administrator.

[FR Doc.76-20744 Filed 7-16-76;8:45 am]

Title 14—Aeronautics and Space

CHAPTER I—FEDERAL AVIATION ADMINISTRATION, DEPARTMENT OF TRANSPORTATION

[Docket No. 15928; Amdt. 39-2674]

PART 39—AIRWORTHINESS DIRECTIVES

Alexander Schleicher Rhonlerche II Gliders

There have been reports of cracks in the welded area between the flight control horizontal torsion tube and the front control stick mount on Alexander Schleicher Rhonlerche II gliders that could result in separation of the front control stick from the horizontal torsion tube and loss of control of the glider. Since this condition is likely to exist or develop in other gliders of the same type design, an airworthiness directive is being issued to require an inspection and reinforcement of the welded area between the flight control horizontal torsion tube and the front control stick mount on Alexander Schleicher Rhonlerche II gliders.

Since a situation exists that requires the immediate adoption of this regulation, it is found that notice and public procedure hereon are impracticable and good cause exists for making this amendment effective in less than 30 days.

This amendment is made under the authority of sections 313(a), 601, and 603 of the Federal Aviation Act of 1958 (49 U.S.C. 1354(a), 1421, and 1423) and of section 6(c) of the Department of Transportation Act (49 U.S.C. 1655(c)).

In consideration of the foregoing and pursuant to the authority delegated to me by the Administrator (14 CFR 11.89), § 39.13 of Part 39 of the Federal Aviation Regulations is amended by adding the following new airworthiness directive:

ALEXANDER SCHLEICHER. Applies to Rhonlerche II gliders, all serial numbers, certificated in all categories.

Compliance is required as indicated, unless already accomplished.

To detect cracks in the welded area between the flight control horizontal torsion tube and the front control stick mount and to prevent front control stick separation from the mount, accomplish the following:

(a) Within the next 10 hours time in service after the effective date of this AD visually inspect with a 5 power magnifier the welded area between the flight control horizontal torsion tube and the front control stick mount in accordance with Alexander Schleicher Technical Note No. 13, page 1, dated June 23, 1975, and page 2, dated July 1, 1975, or an FAA-approved equivalent.

(b) If a crack is found in performing the inspection required by paragraph (a) of this AD, prior to further flight, repair cracks and reinforce the torsion tube-mount area in accordance with Alexander Schleicher Technical Note No. 13, page 1, dated June 23, 1975, and page 2, dated July 1, 1975, or an FAA-approved equivalent.

(c) If no crack is found in performing the inspection required by paragraph (a) of this AD, within the next 100 hours time in service after the effective date of this AD, reinforce the torsion tube-mount area in accordance with Alexander Schleicher Technical Note No. 13, page 1, dated June 23, 1975, and page 2, dated July 1, 1975, or an FAA-approved equivalent.

This amendment becomes effective August 2, 1976.

Issued in Washington, D.C. on July 12, 1976.

J. A. FERRARESE,
Acting Director,
Flight Standards Service.

[FR Doc.76-20678 Filed 7-16-76;8:45 am]

[Docket No. 76-CE-23-AD; Amdt. 39-2671]

PART 39—AIRWORTHINESS DIRECTIVES

Cessna Models 177B and 177RG Airplanes

An Airworthiness Directive (AD) was adopted on June 28, 1976, and made effective immediately by air mail letter to all known owners of certain serial numbers of Cessna Models 177B and 177RG airplanes. This AD was issued because there have been three known incidents in which the horizontal stabilator trim tab actuator bolt which attaches the P/N 1260074-5 actuator to the P/N 1712142-1 bellcrank did not have a retaining nut installed. This condition, if not corrected, may result in loss of the bolt and subsequent adverse effect on air-

craft pitch control. In order to assure that the aforementioned retaining nut is properly installed, the directive requires a visual inspection of the -27 horizontal stabilator trim tab actuator bolt (see Figure 1 attached) and installation of a new bolt, nut, washer and cotter pin if the retaining nut is loose or missing.

Since it was found that immediate corrective action was required, notice and public procedure hereon were impracticable and contrary to the public interest and good cause existed for making this AD effective immediately to the owners of certain serial numbers of Cessna Models 177B and 177RG airplanes. These conditions still exist and the AD is hereby published in the FEDERAL REGISTER as an amendent to § 39.13 of Part 39 of the Federal Aviation Regulations to make it effective as to all persons who did not receive the letter notification.

In consideration of the foregoing and pursuant to the authority delegated to me by the Administrator 14 CFR 11.89 (31 FR 13697), § 39.13 of Part 39 of the Federal Aviation Regulations is amended by adding the following new AD.

CESSNA. Applies to Model 177B (Serial Numbers 17702255 through 17702484, 17702486, 17702489, 17702492 and 17702494) and Model 177RG (Serial Numbers 177RG0700 through 177RG0883, 177RG0885 through 177RG0916, 177RG0919, 177RG0920, 177RG0922, 177RG0923, 177RG0925 through 177RG0928, 177RG0930, 177RG0933, 177RG0935 and 177RG0937) airplanes.

Compliance: Required as indicated, unless already accomplished.

To assure proper attachment of the stabilator trim tab actuator to the trim tab linkage, accomplish the following prior to next flight:

A. Remove round access panels located near the stabilator leading edge on the right and left side of the aircraft to gain access to the horizontal stabilator trim tab actuator.

B. 1. Visually inspect the -27 bolt which attaches the P/N 1260074-5 stabilator trim tab actuator to the P/N 1712142-1 bellcrank (refer to Figure 1) to determine if there is a nut installed on the end of the bolt.

NOTE.—The -27 bolt must have a head on one end and a nut on the other end (refer to Figure 1).

2. If the -27 bolt has a nut installed (castellated nut with a cotter pin or a self-locking nut) and nut is not loose, reinstall the access panels and accomplish Paragraph C below.

NOTE.—Except for those aircraft utilized in air carrier service, Paragraphs A, B.1., B.2. and C. may be accomplished by the holder of a pilot certificate issued under Part 61 of the Federal Aviation Regulations on any aircraft owned and operated by that person.

3. If the nut is loose or missing a certificated mechanic or certificated agency must install an AN3-6 bolt, AN960-10 washer, AN310-3 nut and MS24665-134 cotter pin in accordance with data in applicable Cessna maintenance manuals; reinstall the access panels; and accomplish Paragraphs C and D.

C. Make an entry in the permanent maintenance records to be retained and transferred with the aircraft which includes: Identification of the AD, method of compliance, date of compliance, and name, signature and certificate number of the pilot and/or mechanic or agency accomplishing the AD.

D. Within 48 hours after compliance with Paragraph B.3., notify in writing the Chief, Engineering and Manufacturing Branch, FAA, Central Region, Federal Building, 601 East 12th Street, Kansas City, Missouri 64106, of any missing or loose nuts, aircraft serial number, total aircraft time in service and date of last annual or 100-hour inspection on the airplane. (Reporting approved by the Office of Management and Budget under OMB No. 04-R0174.)

E. Any alternate means of compliance with this AD must be approved by the Chief, Engineering and Manufacturing Branch, FAA, Central Region.

Cessna Service Letter No. SE76-14 or later approved revisions covers the subject matter of this AD.

This amendment becomes effective July 22, 1976, to all persons except those to whom it was made effective earlier by air mail letters issued June 28, 1976.

(Secs. 313(a), 601 and 603 of the Federal Aviation Act of 1958 (49 U.S.C. 1354(a), 1421, and 1423), and of sec. 6(c) of the Department of Transportation Act (49 U.S.C. 1655 (c)).

Issued in Kansas City, Missouri, on July 8, 1976.

C. R. MELUGIN, Jr.,
Director, Central Region.

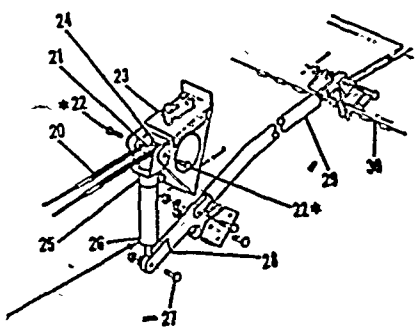

FIGURE 1

[FR Doc.76-20568 Filed 7-16-76;8:45 am]

[Docket No. 76-EA-37, Amdt. 39-2672]

PART 39—AIRWORTHINESS DIRECTIVE

Curtiss-Wright

The Federal Aviation Administration is amending § 39.13 of Part 39 of the Federal Aviation Regulations so as to issue an airworthiness directive applicable to Curtiss-Wright C632S type propellers.

There has been a report that a propeller blade had separated from the propeller, causing damage to the engine. It was determined that the blade separated as a result of a crack which had developed along the leading edge and underneath the blade deicing element. This area is not a normal area for inspection of the blades.

Since this deficiency can exist or develop in propeller blades of similar type design, an airworthiness directive is being issued which will require inspections of the area after removal of the heating element.

In view of the foregoing and because the deficiency is one which affects air safety, notice and public procedure hereon are impractical and good cause exists for making the amendment effective in less than 30 days.

In consideration of the foregoing and pursuant to the authority delegated to me by the Administrator, 14 CFR 11.89 [31 FR 13697] § 39.13 of Part 39 of the Federal Aviation Regulations is amended by issuing a new airworthiness directive, as follows:

CURTISS-WRIGHT: Applies to C632S type propeller equipped with 744-6C2-( ) series hollow steel blades installed on but not limited to Douglas DC-6 aircraft.

Compliance required within 300 hours in service after the effective date of this AD, unless previously accomplished within 1700 hours in service prior to the effective date of this AD, and every 2000 hours in service thereafter.

To preclude the possibility of blade failure due to an undetected crack, accomplish the following in accordance with the propeller manufacturer's instructions contained in FAA approved Curtiss-Wright Corporation Service Publications S-242A-550 dated December 1, 1961, S-3B3-550 dated March 1, 1962, Chapter 63.2-2 as revised to May 1, 1962, and Chapter 63.2-4 as revised to November 1, 1964, or equivalent procedures and methods for inspection approved by the Chief, Engineering and Manufacturing Branch, FAA Eastern Region:

(a) Remove propeller from aircraft and remove blades from hub.

(b) Remove the electrical de-icing heating elements or fluid anti-icing shoes.

(c) Inspect the entire blade surface and the entire internal blade shank area for cracks using the magnetic particle inspection method. When inspecting the internal blade area, visually examine the entire accessible bondline for cracks or separations using a borescope device or a mirror and light combination.

(d) Reject blades with "Indications" as defined in Curtiss-Wright Corporation Service Publication Chapter 63.2-4, paragraph 6. Replace with blades which have been inspected pursuant to this airworthiness directive.

(e) Reassemble acceptable blades and return to service. Upon submission of substantiating data through an FAA Maintenance Inspector, the Chief, Engineering and Manufacturing Branch, FAA Eastern Region, may adjust the repetitive inspection interval specified in this AD.

This amendment is effective July 23, 1976.

(Secs. 313(a), 601, and 603 of the Federal Aviation Act of 1958 [49 U.S.C. 1354(a), 1421, and 1423] and sec. 6(c) of the Department of Transportation Act [49 U.S.C. 1655(c)].)

Issued in Jamaica, N.Y., on July 8, 1976.

L. J. CARDINALI,
Acting Director,
Eastern Region.

[FR Doc.76-20565 Filed 7-16-76;8:45 am]

[Airspace Docket No. 76-WE-19]

PART 71—DESIGNATION OF FEDERAL AIRWAYS, AREA LOW ROUTES, CONTROLLED AIRSPACE, AND REPORTING POINTS

Alteration of Control Zone

The purpose of this amendment to Part 71 of the Federal Aviation Regulations is to alter the description of the

Marysville, California (Beale AFB), Control Zone.

The Department of the Air Force has advised that they plan to decommission the Beale Air Force Base, California VOR on or about July 15, 1976. Since the description of the control zone is based in part on the Beale AFB VOR, regulatory action is required to alter the description of the control zone using the Beale AFB TACAN as a reference for the control zone extensions. The control zone will be modified so as to reduce the control zone extension to the north and add a small control zone extension to the south. The overall modification will result in a reduction to the total control zone airspace.

Since this change is minor in nature and imposes no additional burden on any person, compliance with the notice and public procedure hereon is unnecessary and the amendment may be effective in less than 30 days.

In consideration of the foregoing, Part 71 of the Federal Aviation Regulations is amended effective 0901 G.m.t., July 15, 1976, as hereinafter set forth.

In § 71.171 (41 FR 355) the description of Marysville, California (Beale AFB) control zone is amended to read as follows:

MARYSVILLE, CALIFORNIA (BEALE AFB)

Within a 5-mile radius of Beale AFB (latitude 39°08'10" N, longitude 121°26'05" W), within 1.5 miles each side of the Beale TACAN 347 degree radial extending from the 5-mile radius zone to six miles north of the TACAN; and within 1.5 miles each side of the Beale TACAN 157 degree radial extending from the 5-mile radius zone to 6.5 miles south of the TACAN.

(Sec. 307(a) of the Federal Aviation Act of 1958, as amended (49 U.S.C. 1348(a)), and of sec. 6(c) of the Department of Transportation Act (49 U.S.C. 1655(c)).)

Issued in Los Angeles, California on July 6, 1976.

LYNN L. HINK,
Acting Director, Western Region.

[FR Doc.76-20569 Filed 7-16-76;8:45 am]

[Airspace Docket No. 75-AL-12]

PART 71—DESIGNATION OF FEDERAL AIRWAYS, AREA LOW ROUTES, CONTROLLED AIRSPACE, AND REPORTING POINTS

Alteration and Designation of Controlled Airspace

On December 12, 1975, a notice of proposed rule making (NPRM) was published in the FEDERAL REGISTER (40 FR 57811) stating that the Federal Aviation Administration (FAA) was considering an amendment to Part 71 of the Federal Aviation Regulations that would: (1) Add a west extension to the Nome, Alaska, control zone; (2) realign the east extension of the Nome, Alaska, control zone; (3) reconfigure the lateral limits of the 700-foot Nome, Alaska, transition area.

Interested persons were afforded an opportunity to participate in the proposed rule making through the submission of comments. Several commentators objected to the proposed rule. They based their objection to the west control zone extension on lack of radio coverage in that particular area and the long distance involved to control SVFR operations. The FAA agrees with those comments, and accordingly the proposed west extension to the Nome, Alaska, control zone is not adopted in this amendment.

One commentator suggested that the transition area should, as at present, be delineated by segments of circles based on VOR radials and DME distances from the Nome VORTAC. The FAA concurs with the recommendation and the transition area is described accordingly.

Full and careful consideration, concerning realignment of the east extension of the Nome, Alaska, control zone, was given to all written comments received. The FAA does not agree with the suggestions to reduce the eastern portion of the Nome, Alaska, control zone, any further than that proposed in FAA's proposal.

In consideration of the foregoing, Part 71 of the Federal Aviation Regulations is amended, effective 0901 G.m.t., September 9, 1976, as hereinafter set forth.

In § 71.171 (41 FR 355) the Nome, Alaska, control zone is amended to read:

Within a 5-mile radius of the Nome Airport (Lat. 64°30'46" N., Long. 165°26'31" W.); and within 3 miles north and 4 miles south of the Nome VORTAC 107° and 287° radials, extending from the 5-mile radius zone to 8.5 miles east of the VORTAC.

In § 71.181 (41 FR 440) the Nome, Alaska, transition area is amended to read:

That airspace extending upward from 700 feet above the surface within a 26-mile radius of the Nome VORTAC, extending clockwise from the 277° radial to the 313° radial; and within a 12-mile radius of the Nome VORTAC, extending clockwise from the 313° radial to the 134° radial; and that airspace extending upward from 1,200 feet above the surface within a 25-mile radius of the Nome VORTAC.

(Sec. 307(a) of the Federal Aviation Act of 1958 (49 U.S.C. 1348(a)) and sec. 6(c) of the Department of Transportation Act (49 U.S.C. 1655(c)).)

Issued in Washington, D.C., on July 9, 1976.

EDWARD J. MALO,
Acting Chief, Airspace and Air Traffic Rules Division.

[FR Doc.76-20567 Filed 7-16-76;8:45 am]

[Airspace Docket No. 76-RM-12]

PART 71—DESIGNATION OF FEDERAL AIRWAYS, AREA LOW ROUTES, CONTROLLED AIRSPACE, AND REPORTING POINTS

Alteration of Transition Area

On June 3, 1976, a notice of proposed rule making was published in the FEDERAL REGISTER (41 FR 22370) stating that the Federal Aviation Administration was considering an amendment to Part 71 of the Federal Aviation Regulations that would alter the transition area at Jackson, Wyoming.

Interested persons were given 30 days in which to submit written comments, suggestions or objections. No objections have been received and the proposed amendment is hereby adopted without change.

Effective date: This amendment shall be effective 0901 G.m.t., November 4, 1976.

(Sec. 307(a) of the Federal Aviation Act of 1958, as amended (49 U.S.C. 1348(a)), and of sec. 6(c) of the Department of Transportation Act (49 U.S.C. 1655(c)).)

Issued in Aurora, Colorado, on July 9, 1976.

ISAAC H. HOOVER,
Deputy Director, Rocky Mountain Region.

In FAR 71.181 (41 FR 440) amend the description of the 1200 foot transition area to read as follows:

* * * and that airspace extending upward from 1200 feet above the surface within 8 miles west and 12 miles east of the Jackson VOR 020° radial extending from the VOR to 38.5 miles north of the VOR; within 5 miles each side of the Jackson VOR 107° radial extending from the VOR to 15 miles east of the VOR; and within 6 miles north and 9 miles south of the Dunoir, Wyoming, VOR 102° and 282° radials extending from 8 miles east to 21 miles west of the Dunoir VOR.

[FR Doc.76-20677 Filed 7-16-76;8:45 am]

[Airspace Docket No. 76-GL-18]

PART 71—DESIGNATION OF FEDERAL AIRWAYS, AREA LOW ROUTES, CONTROLLED AIRSPACE, AND REPORTING POINTS

Alteration of Transition Area

On page 20704 of the FEDERAL REGISTER dated May 20, 1976, the Federal Aviation Administration published a notice of proposed rule making which would amend § 71.181 of Part 71 of the Federal Aviation Regulations so as to alter the transition area at Milwaukee, Wisconsin.

Interested persons were given thirty days to submit written comments, suggestions, or objections regarding the proposed amendment.

No objections have been received and the proposed amendment is hereby adopted without change and is set forth below.

This amendment shall be effective 0901 G.m.t., September 9, 1976.

(Sec. 307(a) of the Federal Aviation Act of 1958 (49 U.S.C. 1348), and of sec. 6(c) of the Department of Transportation Act (49 U.S.C. 1655(c)).)

Issued in Des Plaines, Illinois on July 1, 1976.

JOHN M. CYROCKI,
Director, Great Lakes Region.

In § 71.181 (41 FR 440), the following transition area is amended to read:

MILWAUKEE, WISCONSIN

That airspace extending upward from 700 feet above the surface within a 9-mile radius of General Mitchell Field (latitude 42°56'51" N., longitude 87°53'58" W.); within an 8-mile radius of the Horlick-Racine Airport (latitude 42°45'45" N., longitude 87°49'00" W.);

within an 8-mile radius of the Timmerman Airport (latitude 43°06'40" N., longitude 88°02'00" W.); within a 6½-mile radius of the Waukesha County Airport (latitude 43°02'25" N., longitude 88°14'00" W.); and within 3 miles each side of the 274° bearing from the Waukesha County Airport extending from the 6½-mile radius area to 7½ miles west of the airport.

[FR Doc.76-20566 Filed 7-16-76;8:45 am]

Title 18—Conservation of Power and Water Resources

CHAPTER I—FEDERAL POWER COMMISSION

SUBCHAPTER D—APPROVED FORMS, FEDERAL POWER ACT

[Docket No. R-465; Order No. 552]

PART 141—STATEMENTS AND REPORTS (SCHEDULES)

Steam-Electric Plant Air and Water Quality Control Data—Collection of Steam-Electric Generating Plant Pollution Control Data

JULY 13, 1976.

This order directs additions in the information which is to be reported annually to the Commission on Form No. 67. The Form, as presently constituted, was promulgated by the Commission in Order No. 412, issued October 22, 1970, 44 FPC 1291, 35 FR 16831 as amended by Order No. 492 issued September 26, 1973, 50 FPC 873, 38 FR 27605.

REASONS FOR COLLECTING THE PROPOSED DATA.

Declining supplies of natural gas available for electric utility boiler use, electric utility industry inability to develop nuclear power plant capacity in accordance with previously published schedules and the national need to decrease our dependence upon foreign oil imports have led to increased industry reliance upon coal as a fuel source. Inadequate supplies of high-quality coal have resulted in increased electric utility consumption and utilization of high-sulfur, high-ash coal, necessitating the installation of efficient particulate matter and sulfur oxides emission control and disposal equipment by electric utilities at existing plants in order to comply with National Ambient Air Quality Standards and State Implementation Plans on a timely basis. Strategies must be planned so that utilities will be able to meet air quality standards at existing plants in the future as regulations become increasingly strict, as well as to enable utilities to meet all such regulations at plants which are built in the future.

A review of information gathered from various diverse sources suggests that the information currently available on the existence, operation and cost of such equipment and planning is incomplete, thereby underscoring the need for development of a comprehensive source of information and body of data to examine future utility emissions control plans and costs. In addition to the Commission, the Environmental Protection Agency, the Federal Energy Administration, and other Federal, State and local government agencies will have full access to information submitted in response to all parts of FPC Form 67, encompassing all steam-electric plants of at least 25 megawatts capacity and which are presently in operation or will commence operation before May 1, 1983.

HISTORY OF DOCKET NO. R-465

Form No. 67 is an annual report form designed to gather steam-electric plant air and water quality control data, § 141.59, Part 141—Statements and Reports, Subchapter D, Approved Forms, Federal Power Act, Chapter I, Title 18, Code of Federal Regulations. Reporting started with the calendar year 1969; reports through 1974 have been filed with the Commission. The Commission has published a statistical summary for each of the first four years and a similar summary for 1973 is ready for publication. The data collected are used by the Commission and other Federal agencies to evaluate the effect of utility plant operations on air and water quality in the United States.

The additions adopted were proposed, along with certain changes not adopted, as set forth in the notice of proposed rulemaking issued February 21, 1975, 40 FR 12620, 12818 and in the renotice of proposed rulemaking issued November 12, 1975, 40 FR 54828.

More than one hundred responses to the notice of proposed rulemaking were received. Fifty-five utilities and branches of government agencies and one private individual submitted written responses. Twenty-three other utilities submitted completed copies of the proposed Form for various plants. Twenty-two additional utilities filed comments to the effect that the proposed Form would not apply to them. The Tennessee Valley Authority, in response to a request by the Assistant Chief, Bureau of Power, completed a set of forms for each of its fossil-fueled steam-electric plants in order to assist the Commission in establishing the clarity of the questionnaire.

The substantive comments in the responses to the Notice emphasized three themes: (1) That the new schedules be submitted once, at the time new equipment is installed, rather than reporting the information annually; (2) that the information required by Form 67 requires a large expenditure of time and money and therefore is a significant burden on utilities; and (3) that some of the information requested is already reported to state and other Federal agencies, and other information requested is not available at all. In addition, many respondents had suggestions on improving the technical aspects of designing the Form.

The members of the East Central Area Reliability Coordination Agreement (ECAR), through their coordination organization and individually, requested that a public conference be scheduled with the Commission Staff. Due to the importance of the written comments received previously, staff granted the Conference. A Notice of Public Conference was issued on July 3, 1975, 40 FR 29305. Conferences were held on July 24, 1975 at the Commission's Headquarters in Washington, D.C. and on July 31, 1975 at the Commission's Regional Office in the Federal Building, Chicago, Illinois. The most important points made in the two conferences were: (1) Some of the data requested duplicates information already being supplied to the Commission or other government agencies and therefore it becomes an intolerable burden to submit it again on Form 67; (2) it is not the utilities' duty, in most cases, to monitor ambient air quality and, therefore, utilities should not be required to obtain data from one government agency (often a state agency) simply to report it to a second agency; and (3) the Form, as proposed, requires extensive revision in format and substance so that the information desired will be reported completely and without ambiguity.

After consideration of the detailed and extensive written responses to the notice of proposed rulemaking, of the sample forms completed by the Tennessee Valley Authority, and of the excellent discussions and suggestions offered at the two public conferences, the Commission decided to delete three entire schedules on "Boiler Data for Existing Fossil-Fueled Boilers," on "Present and Planned Monitoring System Installations," and on "Ambient Air Quality Data in Vicinity of Plant." Other schedules were altered, or completely redrafted, or given new titles. Because of the extensive changes to the proposed questionnaire, the Commission decided to issue a renotice of the proposed rulemaking (November 12, 1975) and to invite additional comments.

Eighteen utilities, ECAR, the Edison Electric Institute and one private individual submitted written responses to the Renotice. Of the twenty-one respondents only five expressed reservations as to the usefulness of the redrafted questionnaire; the remainder submitted specific comments for further improvement of the questionnaire. The substantive comments in the responses emphasized the following themes: (1) The Form, as proposed, should be used only once rather than being established as an annual report; (2) the information to be collected is already reported to state and other Federal agencies; and (3) the seven year forecasts will provide information of little value because regulations and business conditions are constantly changing, therefore summaries of this information will be highly speculative, misleading and illusory. Some specific comments were narrow in scope and dealt with the reporting problems of individual companies. However, numerous other comments were useful and were incorporated in the final version of the questionnaire attached herewith.

One comment to the Renotice proposed another conference with the Commission's Staff prior to Commission consideration of the additions to Form 67 because of the excellent exchanges accomplished at the earlier conferences. However, in the Commission's judgment all substantive issues had been resolved

through appropriate changes in the questionnaire and, therefore, the Commission finds that such a conference would not serve a useful purpose. Hence, the request for a conference is denied.

CONTENTS OF PART IV

The additions in the data to be collected consist in adding Part IV—"Plans and Costs for Meeting Air Pollution Standards"—to the Form. Part IV consists of six schedules: Schedule A—Boiler Data for New Fossil-Fueled Boilers; Schedule B—Particulate Matter Emission Standards Applicable at Plant and Strategy for Compliance; Schedule C—Sulfur Oxides Emission Standards Applicable at Plant and Strategy for Compliance; Schedule D—Stack Gas Equipment to Remove Particulate Matter; Schedule E—Stack Gas Equipment to Remove Sulfur Oxides; and Schedule F—Plant Data on the Feasibility and Cost of Meeting Ambient Air Quality Standards by Intermittent Control Systems. Part IV is attached hereto, as Appendix A.[1]

The changes in Form 67, as adopted in this Order prescribe the periodic reporting of boiler data for new fossil-fueled boilers (or those under construction) not already reported, detailed information on the particulate and sulfur oxides emissions standards applicable at a plant and the strategies which will be used to achieve compliance with those standards, detailed information on the stack gas equipment installed to remove particulate matter and sulfur oxides and the costs of installation, and detailed information on the feasibility and cost of installing intermittent control systems as a method of meeting ambient air quality standards. That reporting is to be made for the calendar year 1975 initially, and every year thereafter.

The Commission finds further that: (1) The public notice and opportunity to participate in this proceeding with respect to the matters presently before the Commission in the manner described above are consistent and in accordance with all procedural requirements as prescribed in section 553 of Subchapter II of Chapter 5, Title 5 of the United States Code.

(2) It is necessary and appropriate and in the public interest in administering the Federal Power Act, 16 U.S.C. 791(a) et seq., to make additions to Form 67 and to order all reporting entities to complete the new Form for the reporting (calendar) year 1975 and thereafter, all as provided herein.

(3) Good cause exists that the amendments adopted herein become effective upon issuance of this order.

The Commission, acting pursuant to the provisions of the Federal Power Act, as amended, particularly sections 304, 309 and 311 thereof (49 Stat. 855–856, 858–859; 16 U.S.C. 825c(b), 825c(c), 825h, 825j), orders: (A) Section 141.59, Part 141, Statements and Reports (Schedules), Subchapter D—Approved Forms, Federal Power Commission, Chapter I, Title 18, Code of Federal Regulations, is hereby amended to read as follows:

§ 141.59 Form No. 67, Steam-Electric Plant Air and Water Quality Control Data.

This form is designed to obtain detailed information on the generating and emissions control equipment at steam-electric plants 25 megawatts or greater, the present and future cost and operation of such equipment, the present and future disposition of waste materials from the plants, and general information on fuel quality. Data relating to plant and equipment is required every fifth year (see General Instruction #5), with the following exception: Part I, Schedule E, Section 1A shall be reported for 1975 if it was not reported in 1974, again in 1979 and then every fifth year thereafter, unless equipment is altered, or retired prior to the expiration of such periods. Part IV shall be reported for 1975 and for every year thereafter. The initial filing for calendar year 1975 is due four months from the date this order issues. In the future, Part IV will be made an integral part of Form 67.

(B) The schedule entitled Steam-Electric Plant Air Quality Control Data: Plans and Costs for Meeting Air Pollution Standards prescribed by § 141.59 in Chapter I, Title 18 of the Code of Federal Regulations, is revised as set out in Attachment A hereto. Form 67, as prescribed by Commission Order No. 492, and 18 CFR 141.59 is hereby revised so as to (1) include the six schedules as described in the recitals supra, and attached to this Order as Appendix A and (2) modify the first sentence in General Instruction (5) to read as follows (new wording italicized):

(5) Part I, Schedules A, B, C, and D, Part II, Schedules A and B, Part III *and Part IV* should be reported in full each year.

(C) The amendments adopted herein shall become effective upon issuance of this Order.

(D) The Secretary shall cause prompt publication of this Order to be made in the FEDERAL REGISTER.

By the Commission.

[SEAL] KENNETH F. PLUMB, *Secretary.*

[FR Doc.76-20749 Filed 7-16-76;8:45 am]

[1] Filed as part of the original document.

Title 19—Customs Duties

CHAPTER I—UNITED STATES CUSTOMS SERVICE, DEPARTMENT OF THE TREASURY

[T.D. 76-198]

PART 103—AVAILABILITY OF INFORMATION

Vessel Manifest Information; Public Access

On April 21, 1976, a notice of proposed rulemaking was published in the FEDERAL REGISTER (41 FR 16659) which proposed to amend §§ 103.10(d) and 103.11 of the Customs Regulations (19 CFR 103.10(d), 103.11) to permit the public to have greater access to specified information contained in vessel manifests. The notice also proposed to permit the press to copy the names of shippers from outward vessel manifests unless the shippers request that their names be withheld from disclosure.

Section 103.11(a) of the Customs Regulations currently permits accredited representatives of the press to examine and publish specific items of information contained in vessel manifests and summary statistical reports of imports and exports. The names of shippers appearing on outward vessel manifests are not currently available for disclosure.

Section 103.11(c) of the Customs Regulations currently permits accredited representatives of certain trade associations to obtain information from vessel manifests which relates to merchandise of the kind or class in which the association has an interest. However, associations are not permitted to examine vessel manifests. Section 103.11(c) also excludes attorneys, agents, or customhouse brokers acting on behalf of individual importers from the access granted associations. Under § 103.10(d) of the Customs Regulations, however, certain individuals or their representatives are permitted to examine particular vessel manifests in which they have a proper and legal interest as principal or agent.

The proposed amendments were the result of efforts by the United States Customs Service to reconcile possible inconsistencies existing between the provisions of the Customs Regulations and the amendments made to 5 U.S.C. 552 in 1967 by Pub. L. 90-23 (popularly known as the Freedom of Information Act). These efforts included the solicitation of comments from the public through the publication of an advance notice of proposed rulemaking in the FEDERAL REGISTER on November 4, 1975 (40 FR 51201). The comments received in response to that advance notice, the statutory requirements, and the interests of both the public and the Customs Service were considered in preparing the proposed amendments.

Under the proposed amendments, members of the press would be permitted to copy and publish the names of shippers from the outward vessel manifests they are presently permitted to examine pursuant to § 103.11(a) of the Customs Regulations. However, the proposed amendments would not permit the disclosure of the name of any shipper who had previously requested in writing that his name not be disclosed. Importers and consignees presently are permitted under § 103.11(d) to make a similar request that their names be withheld from disclosure. In addition, the general public (including associations) would be permitted to obtain from vessel manifests the same information made available to the press, but would not be permitted to examine the manifests. However, importers and exporters or their duly authorized brokers, attorneys, or agents would continue to be permitted to examine manifests in which they have a proper and legal interest as principal or agent.

Interested persons were given 30 days from the date of publication of the notice of proposed rulemaking to submit relevant data, views, or arguments regarding the proposal. A substantial number of comments were received and were overwhelmingly in favor of the amendments as proposed. After consideration of all the comments received, it was determined that no changes in the proposed amendments were required.

Accordingly, §§ 103.10(d) and 103.11 of the Customs Regulations (19 CFR 103.10(d), 103.11) are amended as set forth below. (The amendment originally proposed to the third and fourth sentences of paragraph (d) of § 103.10 is now set forth as an amendment to § 103.10(d)(2), in accordance with the recent restructuring of § 103.10(d) by T.D. 76-165 (41 FR 22936)).

Effective date: These amendments shall become effective August 18, 1976.

VERNON D. ACREE,
Commissioner of Customs.

Approved: July 12, 1976.

DAVID R. MACDONALD,
Assistant Secretary of the Treasury.

Paragraph (d)(2) of § 103.10 is amended to read as follows:

§ 103.10 Classes of Customs documents exempt from disclosure.

* * * * *

(d) * * *

(1) * * *

(2) Information contained in vessel manifests and summary statistical reports of importations and exportations may be disclosed to the extent permitted by § 103.11.

* * * * *

The title to § 103.11 is amended to read as follows:

§ 103.11 Information on vessel manifests and summary statistical reports.

Paragraph (a)(1) of § 103.11 is amended by inserting after the words "name of vessel," in the first sentence thereof the words "names of shippers,".

Paragraph (a)(2) of § 103.11 is amended by substituting the word "consignees" for the words "shippers and consignees".

Paragraph (c) of § 103.11 is amended to read as follows:

* * * * *

(c) *Disclosure to the public.* Members of the public shall be permitted to obtain information from, but not examine, vessel manifests, subject to the rules set forth in paragraphs (a) and (b) of this section. However, importers and exporters or their duly authorized brokers, attorneys, or agents may be permitted to examine manifests with respect to any consignment of goods in which they have a proper and legal interest as principal or agent, but shall not be permitted to make any general examination of manifests or make any copies or notations from them except with reference to the particular importation or exportation in which they have a proper and legal interest.

Paragraph (d)(1) of § 103.11 is amended to read as follows:

(d) *Suspension of disclosure.* (1) Except as provided in § 103.14, upon written application of a shipper, consignee, or importer, access to the name of such shipper, consignee, or importer, on a manifest will thereafter be refused.

(R.S. 251, as amended, sec. 624, 46 Stat. 759, sec. 501, 65 Stat. 290, as amended (5 U.S.C. 552, 19 U.S.C. 66, 1624))

[FR Doc.76-20694 Filed 7-16-76;8:45 am]

Title 21—Food and Drugs

CHAPTER I—FOOD AND DRUG ADMINISTRATION, DEPARTMENT OF HEALTH, EDUCATION, AND WELFARE

SUBCHAPTER E—ANIMAL DRUGS, FEEDS, AND RELATED PRODUCTS

PART 520—ORAL DOSAGE FORM NEW ANIMAL DRUGS NOT SUBJECT TO CERTIFICATION

Dichlorophene and Toluene Capsules

The Food and Drug Administration has evaluated a new animal drug application (102-020V) filed by Hart-Delta, Inc., 5055 Choctaw Dr., Baton Rouge, LA 70805, proposing safe and effective use of dichlorophene/toluene capsules for the treatment of dogs and cats for certain helminth infections. The application is approved, effective July 19, 1976.

The Commissioner of Food and Drugs is amending § 520.580 (21 CFR 520.580) to reflect this approval.

In accordance with § 514.11(e)(2)(ii) (21 CFR 514.11(e)(2)(ii)) of the animal drug regulations, a summary of the safety and effectiveness data and information submitted to support the approval of this application is released publicly. The summary is available for public examination at the office of the Hearing Clerk, Rm. 4-65, 5600 Fishers Lane, Rockville, MD 20852, Monday through Friday from 9 a.m. to 4 p.m., except on Federal legal holidays.

Therefore, under the Federal Food, Drug, and Cosmetic Act (sec. 512(i), 82 Stat. 347 (21 U.S.C. 360b(i))), and under authority delegated to the Commissioner (21 CFR 5.1) (recodification published in the FEDERAL REGISTER of June 15, 1976 (41 FR 24262)), Part 520 is amended by revising paragraph (c)(1) of § 520.580 to read as follows:

§ 520.580 Dichlorophene and toluene capsules.

* * * * *

(c)(1) *Sponsor.* Nos. 000010, 000856, 010290, 011519, 011536, 011614 and 015563 in § 510.600(c) of this chapter.

* * * * *

Effective date: This amendment shall be effective July 19, 1976.

(Sec. 512(i), 82 Stat. 347 (21 U.S.C. 360b(i)).)

Dated: June 13, 1976.

C. D. VAN HOUWELING,
Director, Bureau of Veterinary Medicine.

[FR Doc.76-20710 Filed 7-16-76;8:45 am]

Title 24—Housing and Urban Development

CHAPTER X—FEDERAL INSURANCE ADMINISTRATION, DEPARTMENT OF HOUSING AND URBAN DEVELOPMENT

SUBCHAPTER B—NATIONAL FLOOD INSURANCE PROGRAM

[Docket No. FI-410]

PART 1920—PROCEDURE FOR MAP CORRECTION

Letter of Map Amendment for Anne Arundel County, Maryland

On November 29, 1974, in 39 FR 41504, the Federal Insurance Administrator published a list of communities with special hazard areas which included Anne Arundel County, Maryland. Map No. H 240008 70 indicates that a parcel of land known as 8 Shore Walk being Lot 11, Sylvan Shores, Anne Arundel County, Maryland, as recorded in Platbook 7, Folio 28 in the office of Land Records of Anne Arundel County, Maryland is in its entirety within the Special Flood Hazard Area. It has been determined by the Federal Insurance Administration, after further technical review of the above map in light of additional, recently acquired flood information, that the above property is not within the Special Flood Hazard Area. Accordingly, Map No. H 240008 70 is hereby corrected to reflect that the above property is not within the Special Flood Hazard Area identified on November 15, 1974.

(National Flood Insurance Act of 1968 (Title XIII of Housing and Urban Development Act of 1968), effective January 23, 1969 (33 FR 17804, November 28, 1968), as amended, 42 U.S.C. 4001-4128; and Secretary's delegation of authority to Federal Insurance Administrator 34 FR 2680, February 27, 1969, as amended by 39 FR 2787, January 24, 1974).

Issued: June 30, 1976.

J. ROBERT HUNTER,
Acting Federal Insurance Administrator.

[FR Doc.76-20315 Filed 7-16-76;8:45 am]

[Docket No. FI-410]

PART 1920—PROCEDURE FOR MAP CORRECTION

Letter of Map Amendment for Anne Arundel County, Maryland

On November 29, 1974, in 39 FR 41504, the Federal Insurance Administrator published a list of communities with special hazard areas which included Anne Arundel County, Maryland. Map No. H 240008 35 indicates that Lot 114 of Plat No. 2 Royal Beach on the Magothy River, being 167 River Road, Pasadena, Anne Arundel County, Maryland, recorded as Plat No. 594 in Book No. 10, Folio 49, in the office of the Clerk of the Circuit Court of Anne Arundel County, Maryland, is in its entirety within the Special Flood Hazard Area. It has been determined by the Federal Insurance Administration, after further technical review of the above map in light of additional, recently acquired flood information, that the existing structure on the above property is not within the Special Flood Hazard Area. Accordingly, Map No. H 240008 35 is hereby corrected to reflect that the

structure on the above property is not within the Special Flood Hazard Area identified on November 15, 1974.

(National Flood Insurance Act of 1968 (Title XIII of Housing and Urban Development Act of 1968), effective January 28, 1969 (33 FR 17804, November 28, 1968), as amended, 42 U.S.C. 4001–4128; and Secretary's delegation of authority to Federal Insurance Administrator 34 FR 2680, February 27, 1969, as amended by 39 FR 2787, January 24, 1974).

Issued: June 21, 1976.

H. B. CLARK,
Acting Federal Insurance Administrator.

[FR Doc.76-20816 Filed 7-16-76;8:45 am]

[Docket No. FI-365]

PART 1920—PROCEDURE FOR MAP CORRECTION

Letter of Map Amendment for Brazoria County, Texas

On January 8, 1976, in 41 FR 1476, the Federal Insurance Administrator published a list of communities with special hazard areas which included Brazoria County, Texas. Map No. H 485458A 08 indicates that these three tracts of land located in Brazoria County, Texas, at the City of Pearland-Brazoria County Line, as recorded in Volume 1228, Pages 477, 458, and 467, respectively, in the office of the Clerk of the Court of Brazoria County, Texas, and a portion of a fourth tract recorded in Volume 1228, Page 484, which can be further described as follows:

Commencing at an iron pipe in the west line of Lot 3, Section 83, H. T. & B.R.R. Company Survey, Abstract No. 761, and east line of the Franklin Hooper Survey, Abstract No. 198, said iron rod being located N 0°09' E, 190.79 feet from the southwest corner of Lot 3 and northwest corner of Lot 4, Section 83, H. T. & B.R.R. Company Survey and N 0°09' E, 1,702.74 feet from the southwest corner of said Section 83; thence S 89°11'30" E, approximately 1,545 feet to a point on the City of Pearland-Brazoria County Line, also being the point of beginning; thence N 15° E, along said City of Pearland-Brazoria County Line, approximately 3,430 feet; thence N 68° E, approximately 200 feet to a point on the east line of Lot 1 and west line of Lot 2, Section 83, H. T. & B.R.R. Company Survey; thence S 0°02' W, approximately 3,350 feet along the east line of Lots 1 and 3 and the west line of Lots 2 and 5 in said Section 83 to an iron pipe at a fence corner located N 0°02' E, 153.55 feet from the southeast corner of Lot 3 and the northeast corner of Lot 4; thence N 89°11'30" W, approximately 1,070 feet to the point of beginning.

are in their entirety within the Special Flood Hazard Area. It has been determined by the Federal Insurance Administration, after further technical review of the above map in light of additional, recently acquired flood information, that the above property is within Zone C, and not within the Special Flood Hazard Area. The map amendment is not based on the placement of fill on the above named property after the effective date of the Flood Insurance Rate Map of the community. Accordingly, Map No. H 485458A 08 is hereby corrected to reflect that the above property is not within the Special Flood Hazard Area identified on January 9, 1974.

(National Flood Insurance Act of 1968 (Title XIII of Housing and Urban Development Act of 1968), effective January 18, 1969 (33 FR 17804, November 28, 1968), as amended, 42 U.S.C. 4001–4128; and Secretary's delegation of authority to Federal Insurance Administrator 34 FR 2680, February 27, 1969, as amended by 39 FR 2787, January 24, 1974).

Issued: June 30, 1976.

J. ROBERT HUNTER,
Acting Federal Insurance Administrator.

[FR Doc.76-20822 Filed 7-16-76;8:45 am]

[Docket No. FI-2228]

PART 1920—PROCEDURE FOR MAP CORRECTION

Letter of Map Amendment for the City of Atlanta, Georgia

On January 8, 1976, in 41 FR 1473, the Federal Insurance Administrator published a list of communities with Special Flood Hazard Areas which included the City of Atlanta, Georgia. Map No. H 135157 11 indicates that Lot 11, Nancy Creek Bluffs, Atlanta, Georgia, as recorded in Plat Book 98, Page 71, in the office of the Clerk of the Superior Court of Fulton County, Georgia, is in its entirety within the Special Flood Hazard Area. It has been determined by the Federal Insurance Administration, after further technical review of the above map in light of additional, recently acquired flood information, that the above mentioned property is within Zone C, and is not within the Special Flood Hazard Area. The map amendment is not based on the placement of fill on the above named property after the effective date of the Flood Insurance Rate Map of the community. Accordingly, Map No. H 135157 11 is hereby corrected to reflect that the above property is not within the Special Flood Hazard Area identified on October 8, 1971.

(National Flood Insurance Act of 1968 (Title XIII of Housing and Urban Development Act of 1968), effective January 28, 1969 (33 FR 17804, November 28, 1968), as amended, 42 U.S.C. 4001–4128; and Secretary's delegation of authority to Federal Insurance Administrator 34 FR 2680, February 27, 1969, as amended by 39 FR 2787, January 24, 1974).

Issued: June 30, 1976.

J. ROBERT HUNTER,
Acting Federal Insurance Administrator.

[FR Doc.76-20814 Filed 7-16-76;8:45 am]

[Docket No. FI-279]

PART 1920—PROCEDURE FOR MAP CORRECTION

Letter of Map Amendment for the City of Brownsville, Texas

On June 3, 1974, in 39 FR 19465, the Federal Insurance Administrator published a list of communities with special hazard areas which included the City of Brownsville, Texas. Map No. H 480103 07 indicates that portions of Units E, F and J, of Amigoland, Section 2, Brownsville, Texas, as recorded in Volume 27, Pages 37–49, and Volume 28, Pages 1–6 of Record Plats, in the office of the Clerk of Cameron County, Texas, are in their entirety within the Special Flood Hazard Area. It has been determined by the Federal Insurance Administration, after further technical review of the above map in light of additional, recently acquired flood information, that with the exception of the "Resaca Easement" and the portion of Units E and F between the Rio Grande and the 60 foot wide Levee Easement the above property is not within the Special Flood Hazard Area. Accordingly Map No. H 480103 07 is hereby further corrected to reflect that the above property is not within the Special Flood Hazard Area identified on May 24, 1974. Map No. H 480103 07 is further corrected to reflect that the remaining portions of Units E, F, and J, and all of Units G, H, I, and K, recorded as cited above, are within the corporate limits of the City of Brownsville, Texas, and that, with the exception of the "Resaca Easement" and the portion of Units E and F between the Rio Grande and the recorded 60 foot wide Levee Easement, are not within the special Flood Hazard Area.

(National Flood Insurance Act of 1968 (Title XIII of Housing and Urban Development Act of 1968), effective January 18, 1969 (33 FR 17804, November 28, 1968), as amended, 42 U.S.C. 4001–4128; and Secretary's delegation of authority to Federal Insurance Administrator 34 FR 2680, February 27, 1969, as amended by 39 FR 2787, January 24, 1974).

Issued: June 30, 1976.

J. ROBERT HUNTER,
Acting Federal Insurance Administrator.

[FR Doc.76-20823 Filed 7-16-76;8:45 am]

[Docket No. FI-893]

PART 1920—PROCEDURE FOR MAP CORRECTION

Letter of Map Amendment for the City of Catoosa, Oklahoma

On March 19, 1976, in 41 FR 11490, the Federal Insurance Administrator published a list of communities with Special Flood Hazard Areas which included the City of Catoosa, Oklahoma. Map No. H 400185A 01 indicates that property in Catoosa, Oklahoma, as recorded in Book 268, Page 83, in the office of the County Clerk of Rogers County, Oklahoma, is in its entirety within the Special Flood Hazard Area. This property is more particularly described as follows:

Beginning at the Northeast corner of the West Half of the Northeast Quarter of said Section 29; thence South along the East boundary of said West Half a distance of 2196.87 feet to a point on the Northerly boundary of the Oklahoma Turnpike Authority right-of-way; thence South 44°55' West along said boundary a distance of 460.6 feet; thence Southwesterly along said boundary on a curve to the left having a radius of 43,171.9 feet a distance of 979.5 feet; thence along said boundary South 43°37' West a distance of 206.2 feet; thence along said boundary North

46°23' West a distance of 100.0 feet; thence along said boundary South 43°37' West a distance of 75 feet; thence along said boundary South 04°57' West a distance of 160.1 feet; thence South 43°37' West along said boundary a distance of 625.2 feet to a point on the South boundary of the Northeast Quarter of the Southeast Quarter of said Section 29; thence West along said South boundary a distance of 563.26 feet; thence North 45°28'17" West a distance of 373.63 feet; thence North 29°58'09" East a distance of 319.66 feet; thence South 48°10'40" East a distance of 111.50 feet; thence North 84°31'11" East a distance of 122.65 feet; thence North 03°49'-32" East a distance of 697.60 feet; thence North 22°51'19" East a distance of 178.01 feet; thence North 59°36'36" East a distance of 93.99 feet; thence South 33°42'32" East a distance of 232.78 feet; thence South 68°44'10" East a distance of 303.93 feet; thence North 38°01'41" West a distance of 230.21 feet; thence North 39°36'08" West a distance of 166.08 feet; thence North 08°51'-24" West a distance of 140.80 feet; thence North 68°20'26" East a distance of 440.44 feet; thence North 64°40'24" West a distance of 296.24 feet; thence South 61°20'22" West a distance of 226.58 feet; thence South 52°-28'56" West a distance of 167.52 feet; thence North 44°21'52" West a distance of 110.00 feet; thence North 11°44'40" East a distance of 123.30 feet; thence North 08°54'04" West a distance of 244.36 feet; thence North 36°-09'03" West a distance of 118.50 feet; thence North 03°27'23" West a distance of 65.50 feet; thence North 39°04'32" East a distance of 106.42 feet; thence North 14°49'29" West a distance of 126.69 feet; thence North 73°06'-03" East a distance of 463.37 feet; thence North 14°55'58" East a distance of 253.01 feet; thence North 03°18'08" East a distance of 263.97 feet; thence North 55°59'18" East a distance of 229.43 feet; thence North 33°24'-45" West a distance of 142.72 feet; thence North 90°00'00" East for a distance of 199.30 feet to a point on the West line of the Northeast Quarter of said Section 29; thence North along the said West line a distance of 162.36 feet to a point on the Southerly right-of-way line of U.S. Highway 66; thence North 49°34'-08" East a distance of 0.00 feet; thence Northeasterly along said Southerly right-of-way on a curve to the left having a radius of 5829.6 feet a distance of 583.57 feet; thence North 43°50' East along said right-of-way a distance of 144.05 feet to a point on the North line of said Section 29; thence East along said North line a distance of 800.4 feet to the point of Beginning, containing 132.837 Acres, more or less.

It has been determined by the Federal Insurance Administration, after further technical review of the above map in light of additional, recently acquired flood information, that the above mentioned property is not within the Special Flood Hazard Area. Accordingly, Map No. H 400185A 01 is hereby corrected to reflect that the above property is not within the Special Flood Hazard Area identified on September 6, 1974.

(National Flood Insurance Act of 1968 (Title XIII of Housing and Urban Development Act of 1968), effective January 28, 1969 (33 FR 17804, November 28, 1968), as amended, 42 U.S.C. 4001–4128; and Secretary's delegation of authority to Federal Insurance Administrator 34 FR 2680, February 27, 1969, as amended by 39 FR 2787, January 24, 1974).

Issued: June 30, 1976.

J. ROBERT HUNTER,
Acting Federal Insurance Administrator.

[FR Doc.76-20820 Filed 7-16-76;8:45 am]

[Docket No. FI-701]

PART 1920—PROCEDURE FOR MAP CORRECTION

Letter of Map Amendment for the City of Dumas, Arkansas

On October 3, 1975, in 40 FR 45807, the Federal Insurance Administrator published a list of communities with special hazard areas which included the City of Dumas, Arkansas. Map No. H 050067A 01 indicates that Lots 14 and 19, Henry Addition, Dumas, Arkansas, as recorded in Volume 144, Page 301 in the office of the Clerk of the Circuit Court of Desha County, Arkansas; and a parcel of land in Desha County, Arkansas, as recorded in Record Book 170, Pages 500 through 504 in the office of the Clerk of the Circuit Court and Recorder of Desha County, Arkansas, are in their entirety within the Special Flood Hazard Area. It has been determined by the Federal Insurance Administration, after further technical review of the above map in light of additional, recently acquired flood information, that the above property is not within the Special Flood Hazard Area. Accordingly, Map No. H 050067A 01 is hereby corrected to reflect that the above property is not within the Special Flood Hazard Area identified on May 10, 1974.

(National Flood Insurance Act of 1968 (Title XIII of Housing and Urban Development Act of 1968), effective January 28, 1969 (33 FR 17804, November 28, 1968), as amended, 42 U.S.C. 4001–4128; and Secretary's delegation of authority to Federal Insurance Administrator 34 FR 2680, February 27, 1969, as amended by 39 FR 2787, January 24, 1974).

Issued: June 25, 1976.

J. ROBERT HUNTER,
Acting Federal Insurance Administrator.

[FR Doc.76-20311 Filed 7-16-76;8:45 am]

[Docket No. FI-294]

PART 1920—PROCEDURE FOR MAP CORRECTION

Letter of Map Amendment for the City of Duncanville, Texas

On February 13, 1974, in 39 FR 5500, the Federal Insurance Administrator published a list of communities with special hazard areas which included the City of Duncanville, Texas. Map No. H 480173 05 indicates that Lots 16, 17, 18, 21, 22, 25 and 26, Block F of Dannybrook Estates, Installment 4, Duncanville, Texas, as recorded in Volume 71129, Page 1681 of the Map Records in the office of the Clerk of Dallas County, Texas, are in their entirety within the Special Flood Hazard Area. It has been determined by the Federal Insurance Administration, after further technical review of the above map in light of additional, recently acquired flood information, that the existing structures on the above property are not within the Special Flood Hazard Area. Accordingly, Map No. H 480173 05 is hereby corrected to reflect that the structures on the above property are not within the Special Flood Hazard Area identified on February 8, 1974.

(National Flood Insurance Act of 1968 (Title XIII of Housing and Urban Development Act of 1968), effective January 28, 1969 (33 FR 17804, November 28, 1968), as amended, 42 U.S.C. 4001–4128; and Secretary's delegation of authority to Federal Insurance Administrator 34 FR 2680, February 27, 1969, as amended by 39 FR 2787, January 24, 1974).

Issued: June 30, 1976.

J. ROBERT HUNTER,
Acting Federal Insurance Administrator.

[FR Doc.76-20824 Filed 7-16-76;8:45 am]

[Docket No. FI-640]

PART 1920—PROCEDURE FOR MAP CORRECTION

Letter of Map Amendment for the City of Florissant, Missouri

On July 25, 1975, in 40 FR 31221, the Federal Insurance Administrator published a list of communities with Special Flood Hazard Areas which included the City of Florissant, Missouri. Map No. H 290352A 04 indicates that 100 St. Francois Street, Florissant, Missouri, as recorded in Book 6799, Page 1604, in the office of the Recorder of Deeds of St. Louis County, Missouri, is in its entirety within the Special Flood Hazard Area. It has been determined by the Federal Insurance Administration, after further technical review of the above map in light of additional, recently acquired flood information, that the existing structure on the above mentioned property is not within the Special Flood Hazard Area. Accordingly, Map No. H 290352A 04 is hereby corrected to reflect that the structure on the above property is not within the Special Flood Hazard Area identified on September 5, 1975.

(National Flood Insuance Act of 1968 (Title XIII of Housing and Urban Development Act of 1968), effective January 28, 1969 (33 FR 17804, November 28, 1968), as amended, 42 U.S.C. 4001–4128; and Secretary's delegation of authority to Federal Insurance Administrator 34 FR 2680, February 27, 1969, as amended by 39 FR 2787, January 24, 1974.)

Issued: June 25, 1976.

J. ROBERT HUNTER,
Acting Federal Insurance Administrator.

[FR Doc.76-20318 Filed 7-16-76;8:45 am]

[Docket No. FI-440]

PART 1920—PROCEDURE FOR MAP CORRECTION

Letter of Map Amendment for the City of Houston, Texas

On January 10, 1975, in 40 FR 2190, the Federal Insurance Administrator published a list of communities with special hazard areas which included the City of Houston, Texas. Map No. H 480296 45 indicates that Blocks 1 through 10, Fawndale Center, Houston, Texas, as recorded in Volume 201, Page 15 in the office of the Clerk of the Court of Harris County, Texas; and a portion of Lots 1, 2, 3, Block D, and Lot 27, Block C of Hahl's Suburban Farms Subdivision G, Houston, Texas, as recorded in Volume 334, Page

134 in the Deed Records of Harris County, Texas, which can be described as follows:

Beginning at the Southwest corner of said Lot One (1), Block "D", said corner also being the intersection of the East right-of-way line of Guhn Road, 40 feet wide, with the North right-of-way line of Fawndale Road, 40 feet wide; thence continuing along the East right-of-way line of Guhn Road, N 2°16'52" W, 617.70 feet to an iron rod; thence continuing along the East right-of-way line of Guhn Road N 2°16'52" W, 105.43 feet to an iron rod set at the intersection of the East right-of-way line of Guhn Road with the Southerly right-of-way line of U.S. Highway No. 290, as described in Volume 4887, Page 288 of the Deed Records of Harris County, Texas; thence along the Southerly right-of-way line of said U.S. Highway No. 290, S 58°48'27" E, 190.72 feet to an iron rod; thence continuing along the Southerly right-of-way of said U.S. Highway No. 290, S 58°48'27" E, 259.94 feet to an iron rod; thence continuing along the Southerly right-of-way line of said U.S. Highway No. 290, S 58°48'27" E, 857.45 feet to an iron rod in the North right-of-way line of Fawndale Road; thence along the North right-of-way line of Fawndale Road S 87°37'58" W, 715.23 feet; thence continuing along the North right-of-way line of Fawndale Road S 87°37'58" W, 375.92 feet to the point of beginning.

are in their entirety within the Special Flood Hazard Area. It has been determined by the Federal Insurance Administration, after further technical review of the above map in light of additional, recently acquired flood information, that the above property is not within the Special Flood Hazard Area. Accordingly, Map No. H 480296 45 is hereby corrected to reflect that the above property is not within the Special Flood Hazard Area identified on December 27, 1974.

(National Flood Insurance Act of 1968 (Title XIII of Housing and Urban Development Act of 1968), effective January 28, 1969 (33 FR 17804, November 28, 1968), as amended, 42 U.S.C. 4001–4128; and Secretary's delegation of authority to Federal Insurance Administrator 34 FR 2680, February 27, 1969, as amended by 39 FR 2787, January 24, 1974).

Issued: June 25, 1976.

J. ROBERT HUNTER,
Acting Federal Insurance Administrator.

[FR Doc.76-20825 Filed 7-16-76;8:45 am]

[Docket No. FI-2229]

PART 1920—PROCEDURE FOR MAP CORRECTION

Letter of Map Amendment for the City of Lakewood, Colorado

On January 8, 1976, in 41 FR 1472, the Federal Insurance Administrator published a list of communities with Special Flood Hazard Areas which included the City of Lakewood, Colorado. Map No. H 085075 06 indicates that Lot 30, Block 11, Meadowlark Hills, Lakewood, Colorado, as recorded in Book 12, Page 2, in the office of the Clerk and Recorder of Jefferson County, Colorado, is in its entirety within the Special Flood Hazard Area. It has been determined by the Federal Insurance Administration, after further technical review of the above map in light of additional, recently acquired flood information, that the above mentioned property is within Zone C, and is not within the Special Flood Hazard Area. The map amendment is not based on the placement of fill on the above named property after the effective date of the Flood Insurance Rate Map of the community. Accordingly, Map No. H 085075 06 is hereby corrected to reflect that the above property is not within the Special Flood Hazard Area identified on January 4, 1974.

(National Flood Insurance Act of 1968 (Title XIII of Housing and Urban Development Act of 1968), effective January 28, 1969 (33 FR 17804, November 28, 1968), as amended, 42 U.S.C. 4001–4128; and Secretary's delegation of authority to Federal Insurance Administrator 34 FR 2680, February 27, 1969, as amended by 39 FR 2787, January 24, 1974).

Issued: June 11, 1976.

R. W. KRIMM,
Acting Federal Insurance Administrator.

[FR Doc.76-20812 Filed 7-16-76;8:45 am]

[Docket No. FI-2230]

PART 1920—PROCEDURE FOR MAP CORRECTION

Letter of Map Amendment for the City of Lakewood, Colorado

On January 8, 1976, in 41 FR 1472, the Federal Insurance Administrator published a list of communities with Special Flood Hazard Areas which included the City of Lakewood, Colorado. Map No. H 085075 11 indicates that Lot 15, Block 8, Calahan Homes—Unit One, Lakewood, Colorado, as recorded in Book 15, Page 53, in the office of the Clerk and Recorder of Jefferson County, Colorado, is in its entirety within the Special Flood Hazard Area. It has been determined by the Federal Insurance Administration, after further technical review of the above map in light of additional, recently acquired flood information, that the existing structure on the above mentioned property is within Zone B, and is not within the Special Flood Hazard Area. The map amendment is not based on the placement of fill on the above named property after the effective date of the Flood Insurance Rate Map of the community. Accordingly, Map No. H 085075 11 is hereby corrected to reflect that the structure on the above property is not within the Special Flood Hazard Area identified on January 4, 1974.

(National Flood Insurance Act of 1968 (Title XIII of Housing and Urban Development Act of 1968), effective January 28, 1969 (33 FR 17804, November 28, 1968), as amended, 42 U.S.C. 4001–4128; and Secretary's delegation of authority to Federal Insurance Administrator, 34 FR 2680, February 27, 1969, as amended by 39 FR 2787, January 24, 1974).

Issued: June 25, 1976.

J. ROBERT HUNTER,
Acting Federal Insurance Administrator.

[FR Doc.76-20813 Filed 7-16-76;8:45 am]

[Docket No. FI-340]

PART 1920—PROCEDURE FOR MAP CORRECTION

Letter of Map Amendment for the City of Longview, Texas

On August 21, 1975, in 40 FR 36564, the Federal Insurance Administrator published a list of communities with special hazard areas which included the City of Longview, Texas. Map No. H 480264A 03 indicates that Lots 5, 6, 7, 8, 9 and 10, Block 948 and Lot 26, Block 947 of Lake View Park, Longview, Texas, as recorded in Volume 702, Page 422 of Deed Records in the office of the Clerk of the County Court of Gregg County, Texas are in their entirety within the Special Flood Hazard Area. It has been determined by the Federal Insurance Administration, after further technical review of the above map in light of additional, recently acquired flood information, that the above property is not within the Special Flood Hazard Area. Accordingly, Map No. H 480264A 03 is hereby corrected to reflect that the above property is not within the Special Flood Hazard Area identified on October 10, 1975.

(National Flood Insurance Act of 1968 (Title XIII of Housing and Urban Development Act of 1968), effective January 28, 1969 (33 FR 17804, November 28, 1968), as amended, 42 U.S.C. 4001–4128; and Secretary's delegation of authority to Federal Insurance Administrator 34 FR 2680, February 27, 1969, as amended by 39 FR 2787, January 24, 1974).

Issued: June 29, 1976.

J. ROBERT HUNTER,
Acting Federal Insurance Administrator.

[FR Doc.76-20826 Filed 7-16-76;8:45 am]

[Docket No. FI-690]

PART 1920—PROCEDURE FOR MAP CORRECTION

Letter of Map Amendment for the City of Parkersburg, West Virginia

On September 17, 1975, in 40 FR 42870, the Federal Insurance Administrator published a list of communities with Special Flood Hazard Areas which included the City of Parkersburg, West Virginia. Map No. H 540214A 03 indicates that property in Parkersburg, West Virginia, as recorded in Deed Book 253, Page 233, in the office of the Clerk of the Court of Wood County, West Virginia, is in its entirety within the Special Flood Hazard Area. It has been determined by the Federal Insurance Administration, after further technical review of the above map in light of additional, recently acquired flood information, that the above mentioned property is not within the Special Flood Hazard Area. Accordingly, Map No. H 540214A 03 is hereby corrected to reflect that the above property is not within the Special Flood Hazard Area identified on September 19, 1975.

(National Flood Insurance Act of 1968 (Title XIII of Housing and Urban Development Act of 1968), effective January 28, 1969

(33 FR 17804, November 28, 1968), as amended, 42 U.S.C. 4001–4128; and Secretary's delegation of authority to Federal Insurance Administrator 34 FR 2680, February 27, 1969, as amended by 39 FR 2787, January 24, 1974).

Issued: June 30, 1976.

J. ROBERT HUNTER,
Acting Federal Insurance Administrator.

[FR Doc.76-20827 Filed 7-16-76;8:45 am]

[Docket No. FI-2227]

PART 1920—PROCEDURE FOR MAP CORRECTION

Letter of Map Amendment for the City of Tulsa, Oklahoma

On August 17, 1971, in 36 FR 15532, the Federal Insurance Administrator published a list of communities with Special Flood Hazard Areas which included the City of Tulsa, Oklahoma. Map No. H & I 405381 11 indicates that Lot 5, Block 2, and Lot 1, Block 3, Wolf Point Industrial Parkway West, as recorded on Plat No. 3132; and Lots 8 and 9, Block 1, Lot 1, Block 2, and Lots 2 and 3, Block 3, of a resubdivision of Lots 3 and 4, Block 2, and Lots 1 through 8 inclusive and lot 16, Block 4, Wolf Point Industrial Parkway West, as recorded on Plat No. 3279, on file in the office of the County Clerk of Tulsa County, Oklahoma, are in their entirety within the Special Flood Hazard Area. It has been determined by the Federal Insurance Administration, after further technical review of the above map in light of additional, recently acquired flood information, that all of the above mentioned property, with the exception of the areas shown as Easements on Lot 8, Block 1, on Plat No. 3279 cited above, is within Zone B, and is not within the Special Flood Hazard Area. The map amendment is not based on the placement of fill on the above named property after the effective date of the Flood Insurance Rate Map of the community. Accordingly, Map No. H & I 405381 11 is hereby corrected to reflect that the above property is not within the Special Flood Hazard Area identified on August 17, 1971.

(National Flood Insurance Act of 1968 (Title XIII of Housing and Urban Development Act of 1968), effective January 28, 1969 (33 F.R. 17804, November 28, 1968), as amended, 42 U.S.C. 4001–4128; and Secretary's delegation of authority to Federal Insurance Administrator 34 F.R. 2680, February 27, 1969, as amended by 39 F.R. 2787, January 24, 1974).

Issued: May 21, 1976.

J. ROBERT HUNTER,
Acting Federal Insurance Administrator.

[FR Doc.76-20821 Filed 7-16-76;8:45 am]

[Docket No. FI-326]

PART 1920—PROCEDURE FOR MAP CORRECTION

Letter of Map Amendment for the Town of Dennis, Massachusetts

On August 7, 1974, in 39 FR 28425, the Federal Insurance Administrator published a list of communities with Special Flood Hazard Areas which included the Town of Dennis, Massachusetts. Map No. H 250005 11 indicates that Lot B, as shown on Plan 16908 [B], Dennis, Massachusetts, as recorded in Book 234, Page 49, in the Barnstable County Registry of Deeds, Massachusetts, is in its entirety within the Special Flood Hazard Area. It has been determined by the Federal Insurance Administration, after further technical review of the above map in light of additional, recently acquired flood information, that the existing structure on the above mentioned property is not within the Special Flood Hazard Area. Accordingly, Map No. H 250005 11 is hereby corrected to reflect that the structure on the above property is not within the Special Flood Hazard Area identified on July 26, 1974.

(National Flood Insurance Act of 1968 (Title XIII of Housing and Urban Development Act of 1968), effective January 28, 1969 (33 FR 17804, November 28, 1968), as amended, 42 U.S.C. 4001–4128; and Secretary's delegation of authority to Federal Insurance Administrator 34 FR 2680, February 27, 1969, as amended by 39 FR 2787, January 24, 1974).

Issued: June 30, 1976.

J. ROBERT HUNTER,
Acting Federal Insurance Administrator.

[FR Doc.76-20817 Filed 7-16-76;8:45 am]

[Docket No. FI-259]

PART 1920—PROCEDURE FOR MAP CORRECTION

Letter of Map Amendment for the Town of Kearny, Arizona

On November 29, 1973, in 38 FR 32924, the Federal Insurance Administrator published a list of communities with special hazard areas which included the Town of Kearny, Arizona. Map No. H 040085 01 indicates that a portion of Elks Lodge Lot, Pinal County, Arizona, as recorded in Docket 770, Page 418 in the office of the Recorder of Pinal County, Arizona, which can be further described as follows:

Beginning at the northeast corner of the above referenced property, said point also being a point on the south line of Airport Road; thence S 36°41'00" W, approximately 425 feet to a point; thence N 20°49' W, approximately 219 feet to a point on the west lot line of subject property; thence N 27°26'30" E, approximately 238 feet to a point; thence N 27°30' E, approximately 65 feet to a point on the south line of Airport Road; thence S 53°19' W, approximately 80 feet along said street line to a point; thence along a curve to the left of radius 368.27 feet a distance of 105.70 feet to the point of beginning.

is within the Special Flood Hazard Area. Map No. H 040085 01 also indicates that a portion of the property in the East ½ Section 28, T4S, R 14E, G, and SRBM, Pinal County Arizona, recorded in Docket 203, Page 465 in the office of the Recorder of Pinal County, Arizona, which can be further described as follows:

Beginning at the southeast corner of a Parcel C-2, recorded in Docket 803, Page 382; thence along the north line of Airport Road along a curve to the left having an angle 7°00'48" a distance of 62.23 feet to a point; thence N 75°19'00" W, 131.65 feet to a point; thence along a curve to the right having an angle of 20°00'00" and a radius of 308.27 feet for a distance of 107.61 feet to a point; thence N 55°19'00" W, 44.39 feet to a point; thence N 36°41'00" E, approximately 54 feet to a point; thence N 64°41' E, approximately 194 feet to a point; thence N 36°41'00" E, approximately 137 feet to a point on the west right-of-way line of the Southern Pacific Railroad; thence southeasterly along said railroad right-of-way line an arc distance of approximately 258.33 feet to a point; thence S 36°41'00" W, 173.30 feet to the point of beginning.

is within the Special Flood Hazard Area. It has been determined by the Federal Insurance Administration, after further technical review of the above map in light of additional, recently acquired flood information, that the above properties are not within the Special Flood Hazard Area. Accordingly, Map. No. H 040085 01 is hereby corrected to reflect that the above properties are not within the Special Flood Hazard Area identified on November 30, 1973.

(National Flood Insurance Act of 1968 (Title XIII of Housing and Urban Development Act of 1968), effective January 28, 1969 (33 FR 17804, November 28, 1968), as amended, 42 U.S.C. 4001–4128; and Secretary's delegation of authority to Federal Insurance Administrator 34 FR 2680, February 27, 1969, as amended by 39 FR 2787, January 24, 1974).

Issued: June 25, 1976.

J. ROBERT HUNTER,
Acting Federal Insurance Administrator.

[FR Doc.76-20810 Filed 7-16-76;8:45 am]

[Docket No. FI-196]

PART 1920—PROCEDURE FOR MAP CORRECTION

Letter of Map Amendment for the Village of Ridgewood, New Jersey

On August 24, 1973, in 38 FR 22776, the Federal Insurance Administrator published a list of communities with Special Flood Hazard Areas which included the Village of Ridgewood, New Jersey. Map No. H 340067 04 indicates

that 705 Witthill Road, Ridgewood, New Jersey, as recorded in Book 5130, Pages 217 and 218, in the office of the Clerk of Bergen County, New Jersey, is in its entirety within the Special Flood Hazard Area. It has been determined by the Federal Insurance Administration, after further technical review of the above map in light of additional, recently acquired flood information, that the above mentioned property is not within the Special Flood Hazard Area. Accordingly, Map No. H 340067 04 is hereby corrected to reflect that the above property is not within the Special Flood Hazard Area identified on August 31, 1973.

(National Flood Insurance Act of 1968 (Title XIII of Housing and Urban Development Act of 1968), effective January 28, 1969 (33 FR 17804, November 28, 1968), as amended, 42 U.S.C. 4001–4128; and Secretary's delegation of authority to Federal Insurance Administrator 34 FR 2680, February 27, 1969, as amended by 39 FR 2787, January 24, 1974).

Issued: June 25, 1976.

J. ROBERT HUNTER,
Acting Federal Insurance Administrator.

[FR Doc.76-20819 Filed 7-16-76;8:45 am]

[Docket No. FI-450]

PART 1920—PROCEDURE FOR MAP CORRECTION

Letter of Map Amendment for Wood County, West Virginia

On January 24, 1975, in 40 FR 3782, the Federal Insurance Administrator published a list of communities with Special Flood Hazard Areas which included Wood County, West Virginia. Map No. H 540213 05 indicates that property is Parkersburg, West Virginia, as recorded in Deed Book 253, Page 233, in the office of the Clerk of the Court of Wood County, West Virginia, is in its entirety within the Special Flood Hazard Area. It has been determined by the Federal Insurance Administration, after further technical review of the above map in light of additional, recently acquired flood information, that the above mentioned property is not within the Special Flood Hazard Area. Accordingly, Map No. H 540213 05 is hereby corrected to reflect that the above property is not within the Special Flood Hazard Area identified on January 17, 1975.

(National Flood Insurance Act of 1968 (Title XIII of Housing and Urban Development Act of 1968), effective January 28, 1969 (33 FR 17804, November 28, 1968), as amended, 42 U.S.C. 4001–4128; and Secretary's delegation of authority to Federal Insurance Administrator 34 FR 2680, February 27, 1969, as amended by 39 FR 2787, January 24, 1974).

Issued: June 30, 1976.

J. ROBERT HUNTER,
Acting Federal Insurance Administrator.

[FR Doc.76-20828 Filed 7-16-76;8:45 am]

Title 32—National Defense

CHAPTER VI—DEPARTMENT OF THE NAVY

PART 762—MIDWAY ISLANDS CODE

On page 34352 of the FEDERAL REGISTER of August 15, 1975, there was published proposed regulations that would establish a Part 762 of 32 CFR entitled, "Midway Island Code." Interested persons were given 45 days in which to submit written data, views, comments, and arguments regarding the proposed regulations. The 45 day time limit has long since expired and no written objections, comments or arguments have been received. Accordingly, pursuant to the authority conferred under the Act of July 12, 1960, Pub. L. No. 86-824, section 48, 74 Stat. 424; 3 U.S.C. 301; and Exec. Order No. 11,048, 3 CFR, 1959-1963 comp., p. 632 (1962), the Secretary of the Navy adopted the Midway Islands Code on June 7, 1976. A new Part 762 of 32 CFR is therefore established. This part provides for the civil administration of the Midway Islands by vesting judicial and executive powers and duties in appropriate officers of the United States and by adopting and instituting certain civil laws and criminal provisions and penalties. Moreover, Part 762 provides a method for resolving civil disputes and establishes criminal jurisdiction over civilians on the Midway Island.

Therefore, title 32, CFR, is hereby amended by adding a new Part 762, provided as follows:

Subpart A—General

Sec.
762.1 Applicability.
762.3 Purpose.
762.4 Scope.

Subpart B—Executive Authority; Authorized Powers; Emergency Authority

762.6 Executive authority; duration.
762.8 Authorized functions, powers, and duties.
762.10 Emergency authority.

Subpart C—Criminal Law; Petty Offenses; Penalties

762.15 General.
762.16 Adoption of certain criminal provisions of the Hawaii Revised Statutes.
762.17 Conflicts of laws.
762.18 Time limitations.
762.19 Petty offenses; general.
762.20 Breach of the peace offenses.
762.22 Offenses against property.
762.24 Moral offenses.
762.26 Alcoholic beverages offenses.
762.28 Vehicle offenses.
762.30 Weapons offenses.
762.32 Offenses against the environment.
762.34 Miscellaneous offenses.
762.35 Attempt.
762.40 Penalties for petty offenses.
762.42 Penalties for motor vehicle violations.
762.44 Contempt.

Subpart D—Midway Islands Court; Rules of Criminal Procedure

762.50 Establishment; members; sessions.
762.52 Attorney for the United States.
762.54 Criminal jurisdiction.
762.55 Venue.
762.56 Rules of criminal procedure.
762.58 Release prior to trial and bail.
762.62 Information.
762.64 Motions and pleas.
762.66 Trial.
762.68 Sentence.
762.70 Subpoenas.
762.72 Appeals.
762.74 New trial.

Subpart E—Warrants; Arrests; Special Procedures

762.80 Warrants.
762.82 Arrests.
762.84 Citation in place of arrest.
762.86 Abatement of nuisance.

Subpart F—Registration and Permit Regulations

762.90 Registration of certain property.
762.92 Permits.
762.94 Expiration of permits.
762.96 Revocation or suspension of permits.

Subpart G—Civil Small Claims Law

762.100 Applicable law and jurisdiction over small claims.
762.102 Small claims procedure; complaint and service.
762.104 Time limitations.
762.106 Cost and fees; waiver.
762.108 Set-off or counterclaim; pleading; retention of jurisdiction.
762.109 Jury trial; demand.
762.110 Pre-trial settlement.
762.112 Trial.
762.114 Judgments.
762.116 Award of costs.
762.118 No appeal.
762.120 Judgment creditors and remedies.
762.126 Parties.
762.128 Forms and public information.

Subpart H—Savings Clause

762.130 Severability of subparts, sections, paragraphs, or provisions.

AUTHORITY: Sec. 48, 74 Stat. 424; 3 U.S.C. 301; Exec. Order No. 11,048, 3 CFR, 1959-1963 Comp., p. 632; (1962).

Subpart A—General

§ 762.1 Applicability.

(a) The local criminal and civil laws of the Midway Islands consist of this Part 762, the provisions of the laws of the State of Hawaii adopted pursuant to § 762.16(a) and § 762.112(a), applicable provisions of the laws of the United States, and those laws made applicable under the special maritime jurisdiction contained in the Act of June 15, 1950 (ch. 253, 64 Stat. 217).

(b) For the purposes of this Part 762, the Midway Islands include all public lands on, and all territorial waters and the contiguous zone adjacent to or surrounding, the Midway Islands, Hawaiian Group, between the parallels of 28°5′ and 28°25′ North Latitude, and between the meridians of 177°10′ and 177°30′ West Longitude, as were placed under the jurisdiction and control of the Navy Department by the provisions of Executive Order No. 199-A of January 20, 1903, as superseded by Executive Order No. 11,048 of September 5, 1962.

§ 762.3 Purpose.

The purpose of this Part 762 is to provide:

(a) For the civil administration of the Midway Islands;

(b) For vesting powers and duties in appropriate officers of the United States for the civil administration of the Midway Islands, including judicial and executive functions;

(c) Certain criminal provisions applicable to the Midway Islands not otherwise provided for, and penalties for their violations;

(d) A judicial system for the Midway Islands not otherwise provided for; and

(e) Certain civil laws for the Midway Islands not otherwise provided for.

§ 762.4 Scope.

(a) This Part 762 is applicable to all civilian and nonmilitary persons, and to all military personnel for matters involving civil administration, civil law, or criminal offenses not otherwise covered by the Uniform Code of Military Justice, while such persons are on the Midway Islands.

(b) In no event shall the provisions of this Part 762 supersede federal law, or the Uniform Code of Military Justice, nor shall the provisions of this part derogate the inherent or delegated authority, responsibility, and powers of the Commanding Officer, U.S. Naval Station, Midway Island, under U.S. Navy Regulations, 1973, the Uniform Code of Military Justice, other pertinent Navy directives, and federal law.

Subpart B—Executive Authority; Authorized Powers; Emergency Authority

§ 762.6 Executive authority; duration.

The executive authority at the Midway Islands is vested in the Secretary of the Navy. The Commanding Officer, U.S. Naval Station, Midway Island, is the agent of the Secretary or his designee in carrying out any function, power, or duty under this Part 762. The Commanding Officer's authority commences upon his assumption of command of U.S. Naval Station, Midway Island, and continues until he is relieved of that command by replacement. In the event of the absence, disability, or death of the Commanding Officer, the Acting Commanding Officer of U.S. Naval Station, Midway Island, is vested with the authority prescribed in this Part 762 for the Commanding Officer and shall remain so vested until the return, recovery, or replacement of the Commanding Officer.

§ 762.8 Authorized functions, powers, and duties.

The Commanding Officer may, personally or through his staff:

(a) Issue citations for violations of Subpart C of this Part 762;

(b) Abate any public nuisance upon the failure of the person concerned to comply with a removal notice;

(c) Make sanitation and fire-prevention inspections;

(d) Perform marriages, and maintain records of vital statistics, including birth, marriage, and death certificates;

(e) Inspect vehicles, including bicycles, for roadworthiness, and boats for seaworthiness;

(f) Confiscate property used in committing a crime;

(g) Investigate accidents and suspected crimes;

(h) Move unlawfully parked vehicles, boats, or aircraft;

(i) Take possession of lost or abandoned property and dispose of it under the provisions of 10 U.S.C. 2575 and applicable Navy directives;

(j) Delay or restrict the departure of any aircraft for reasonable cause;

(k) Impose quarantines;

(l) Impound and destroy unsanitary food, fish, or beverages;

(m) Evacuate any person from a hazardous area;

(n) Establish and maintain a facility for the lawful restraint or confinement of persons and provide for their care;

(o) Remove any person from the Midway Islands for cause;

(p) Issue traffic regulations that are not inconsistent with this Part 762, and post traffic signs;

(q) Perform any other acts, not inconsistent with this Part 762 or other applicable laws or regulations, that he considers necessary for protecting the health and safety of persons and property on the Midway Islands; and

(r) Issue any order or notice necessary to implement this section.

§ 762.10 Emergency authority.

During the imminence and duration of any emergency, the Commanding Officer may perform any acts necessary to protect life and property.

Subpart C—Criminal Law; Petty Offenses; Penalties

§ 762.15 General.

In addition to any act made criminal in this Part 762, any act committed on Midway Islands which would be a violation of the laws of the United States; or of the provisions of Title 37, "Hawaii Revised Statutes," as they now appear or as they may be amended or recodified; or any act committed on the Midway Islands that would be criminal if committed on board a merchant vessel or other vessel belonging to the United States, is a criminal offense and shall be punished, respectively, according to this part; the laws of the United States; Title 37, "Hawaii Revised Statutes," as it now appears or as it may be amended or recodified; or according to the laws applicable on board United States vessels on the high seas. [The Act of June 15, 1950 (ch. 253, 64 Stat. 217).]

§ 762.16 Adoption of certain criminal provisions of the Hawaii Revised Statutes.

(a) *Offenses adopted.* Whoever on the Midway Islands is guilty of any act or omission, which, although not made punishable by an enactment of Congress or under §§ 762.20 through 762.39, would be punishable if committed within the State of Hawaii by the laws thereof at the time of such act or omission, shall be guilty of a like offense and subject to a like punishment.

(b) *Jurisdiction over such offenses.* The United States District Court for the District of Hawaii shall have jurisdiction to try all such offenses except those which are subject, under Title 37, "Hawaii Revised Statutes," as it now appears or as it may be amended or recodified, to a penalty of imprisonment for six months or less or a fine of not more than $500, or both. Those offenses falling within the above-stated exception shall be tried in the Midway Islands Court.

§ 762.17 Conflicts of laws.

In no event shall the provisions of this Part 762 supersede the Uniform Code of Military Justice when the latter is applicable. Any adopted provisions of Title 37, "Hawaii Revised Statutes," as they now appear or as they may be amended or recodified, which duplicate or conflict with any other provisions of this Part 762, shall be of no effect.

§ 762.18 Time limitations.

(a) A prosecution for any petty offense under this Part 762 must be commenced within two years after it is committed.

(b) An offense is committed either when every element occurs, or, if a legislative purpose to prohibit a continuing course of conduct plainly appears, at the time when the course of conduct or the defendant's complicity therein is terminated. Time starts to run on the day after the offense is committed.

(c) A prosecution is commenced either when an information is filed, or when an arrest warrant or other process is issued, provided that such warrant or process is executed without unreasonable delay.

(d) The period of limitation does not run:

(1) During any time when the accused is absent from the Midway Islands or has no reasonably ascertainable place of abode or work within the Midway Islands, but in no case shall this provision extend the period of limitation otherwise applicable by more than three years; or

(2) During any time when a prosecution against the accused for the same conduct is pending in the Midway Islands Court.

(e) Except those offenses which are subject, under title 37 of the "Hawaii Revised Statutes," as they now appear or as they may be amended or recodified, to a penalty of imprisonment for six months or less or a fine of not more than $500, or both, offenses charged and treated under § 762.16 (a) and (b), shall be subject to the appropriate time-limitation rules set forth in section 108, Title 37, "Hawaii Revised Statutes," as it now appears or as it may be amended or recodified.

§ 762.19 Petty offenses; general.

All offenses contained in §§ 762.20 through 762.39 and those offenses adopted under § 762.16(a), as they now appear or as they may be amended or recodified, which are subject, under Title 37, "Hawaii Revised Statutes," to a penalty of imprisonment for six months or less or a fine of not more than $500, or both, shall be termed "Petty Offenses" and subject to the penalties set forth in §§ 762.40 through 762.49.

§ 762.20 Breach of the peace offenses.

It shall be unlawful for any person, while on the Midway Islands:

(a) With intent to cause public inconvenience, annoyance, or alarm, or recklessly creating a risk thereof, to engage in fighting, threatening, or other violent

or tumultuous behavior; or to make unreasonable noise or offensively coarse utterances, gestures, or displays, or address abusive language to any person present; or to create a hazardous or physically offensive condition by any act which is not performed under any authorized license or permit;

(b) Having no legal privilege to do so, knowingly or recklessly to obstruct any roadway, alley, runway, private driveway, or public passage, or interfere with or unreasonable delay any emergency vehicle or equipment or authorized vehicle, boat, vessel, or plane, or any peace officer, fireman, or other public official engaged in or attempting to discharge any lawful duty or office, whether alone or with others. "Obstruction" as used in this paragraph means rendering impassable without unreasonable inconvenience or hazard;

(c) When in a gathering, to refuse to obey a reasonable request or order by a peace officer, fireman, or other public official to move;

(1) To prevent an obstruction of any public road or passage;

(2) To maintain public safety by dispersing those gathered in dangerous proximity to a public hazard. An order to move under this subsection addressed to a person whose speech or other lawful behavior attracts an obstructing audience, is not reasonable if the obstruction can be readily remedied by police control;

(d) To be substantially intoxicated on any street, road, beach, theater, club, or other public place from the voluntary use of intoxicating liquor, drugs, or other substance. As used in this paragraph, "substantially intoxicated" is defined as an actual and considerable disturbance of mental or physical capacities;

(e) With intent to arouse or gratify sexual desire of any other person, to expose one's genitals to a person to whom one is not married under circumstances in which one's conduct is likely to cause affront or alarm; or

(f) Who is a minor under the age of 18 years, except a person in the military, to loiter about or otherwise be on any street, road, beach or other public place or in any theater, club, or other facility between the hours of 12:00 midnight and 5:30 a.m. unless accompanied by an adult over the age of 21 years and with the express permission of such minor's parent or legal guardian; and for any parent, guardian, or other person having the legal care, custody, or control of any minor under the age of 18 years, except a person in the military, to allow or permit such minor to violate this ordinance.

§ 762.22 Offenses against property.

It shall be unlawful for any person, while on the Midway Islands:

(a) To loiter, prowl, or wander upon or near the assigned living quarters and adjacent property of another without lawful purpose, or, while being upon or near the assigned living quarters and adjacent property of another, to peek in any door or window of any inhabited building or structure located thereon without lawful purpose;

(b) To enter upon any assigned residential quarter or areas immediately adjacent thereto, without permission of the assigned occupant;

(c) Who is a male to enter any area, building, or quarter reserved for women, except in accordance with established visiting procedures;

(d) Who is a female to enter any area, building, or quarter reserved for men, except in accordance with established visiting procedures;

(e) To enter or remain in, without lawful purpose, any office building, warehouse, plant, theater, club, school, or other building after normal operating hours for that building;

(f) To enter or remain in any area or building designated and posted as "restricted" unless authorized by proper authority to be there; or

(g) To steal any services or property of a value of less than $50 belonging to or property of another.

§ 762.24 Moral offenses.

It shall be unlawful for any person, while on the Midway Islands:

(a) To engage in prostitution. "Prostitution" means the giving or receiving of the body for sexual intercourse for hire or for indiscriminate sexual intercourse with or without hire; or

(b) To do any lewd act in a public place which is likely to be observed by others who would be affronted or alarmed. "Lewd Act" includes any indecent or obscene act.

§ 762.26 Alcoholic beverages offenses.

It shall be unlawful for any person, while on the Midway Islands:

(a) To sell any alcoholic beverages to any person who, because of age, would be prohibited from purchasing that beverage in a civilian establishment in Hawaii. It shall not be unlawful, however, for persons authorized to sell alcoholic beverages to sell beer with an alcoholic content of not more than 3.2 percent by weight to military personnel regardless of age; or

(b) To present or have in his possession any fraudulent evidence of age for the purpose of obtaining alcoholic beverages in violation of § 762.26(a).

§ 762.28 Vehicle offenses.

It shall be unlawful for any person, while on the Midway Islands:

(a) To operate or use intentionally any automobile, truck, bicycle, motorcycle or other vehicle, aircraft, or boat or other vessel, for any purpose, without consent of the owner thereof or his authorized agent;

(b) To operate any bicycle that has not been properly registered with the Security Department, U.S. Naval Station, Midway Island, within one week after entering U.S. Naval Station, Midway Island, with such bicycle, or within 72 hours after ownership or possession thereof has been obtained on the Midway Islands;

(c) To operate any automobile, truck, bicycle, motorcycle or other vehicle, aircraft, or boat or other vessel, without due regard for safety of others;

(d) To operate any automobile, truck, bicycle, motorcycle, or other vehicle and disregard or disobey any traffic regulation, sign, or marking erected, inscribed, or placed by competent authority on the Midway Islands, including, but not limited to, "Stop," "Yield," "Speed," and "No Parking" signs;

(e) To operate a United States Government vehicle without holding a current United States Government operator's license for that type of vehicle;

(f) To operate a privately owned automobile, truck, motorcycle, or like motor vehicle without holding a valid operator's license from some State or territory of the United States;

(g) To operate any automobile, truck, bicycle, motorcycle, or other vehicle, aircraft, or boat or other vessel, or other means of conveyance while under the influence of alcoholic beverages, narcotic drugs, central nervous system stimulants, hallucinogenic drugs or barbituates; or

(h) To exceed the speed limit for automobiles, trucks, bicycles, motorcycles, or other vehicles. Unless otherwise posted, the speed limit throughout the Midway Islands is 15 miles per hour.

§ 762.30 Weapons offenses.

It shall be unlawful for any person, while on the Midway Islands:

(a) Other than a security patrolman or shore patrolman or other duly appointed official in the performance of an official duty, to carry a concealed pistol or other concealed firearm, or a concealed knife with a blade more than four inches long or with a blade capable of being opened by a mechanical device, commonly known as a switchblade knife; or

(b) Without proper authority, to keep or use in any place any dangerous weapons including rifles, shotguns, pistols, airguns, CO_2 guns, pellet guns, and BB guns.

§ 762.32 Offenses against the environment.

It shall be unlawful for any person, while on the Midway Islands:

(a) Knowingly to place, throw, drop, or allow to drop any litter on any property or in any waters or beach. "Litter" means rubbish, refuse, and debris of whatever kind or description, whether or not it is of value;

(b) To grossly waste potable water; or

(c) To remove, injure, or destroy any wild bird, egg, or seal, or for any owner of a dog or other pet to allow knowingly such dog or other pet to remove, injure, or destroy any wild bird, egg, or seal, or for the parent or legal guardian of any minor child to allow knowingly such minor child to remove, injure, or destroy any wild bird, egg, or seal.

§ 762.34 Miscellaneous offenses.

It shall be unlawful for any person, while on the Midway Islands:

(a) To engage in a trade, business, or other commercial activity on Midway Islands without first obtaining written permission from the Commanding Officer, U.S. Naval Station, Midway Island;

(b) To smoke or ignite any fire in any designated and posted "No Smoking" area, or in the immediate proximity of any aircraft, fueling pit, or ordnance or pyrotechnic storage areas;

(c) Knowingly to report or cause to be reported to the Security Department, Fire Department, or any official thereof, or to any other public official, or willfully to activate, or cause to be activated, any alarm, that an emergency exists, knowing that such report or alarm is false. "Emergency," as used herein, includes any condition which results, or could result, in the response of a public official in an emergency vehicle, or any condition which jeopardizes, or could jeopardize, public lives or safety, or results or could result in the evacuation of an area, building, structure, vehicle, aircraft, or boat or other vessel, or any other place by its occupants; or

(d) Intentionally to report to any shore patrolman, security patrolman, fireman, officer of the day, junior officer of the day, or other public official authorized to issue a warrant of arrest or make an arrest, that a crime has been committed, or make any oral or written statement to any of the above officials concerning a crime or alleged crime or other matter, knowing such report or statement to be false.

§ 762.35 Attempt.

(a) A person is guilty of attempt to commit a crime if he commits an act, done with the specific intent to commit an offense, amounting to more than mere preparation and tending, even though failing, to effect its commission.

(b) It shall be unlawful for any person, while on the Midway Islands to attempt to violate any section of Subpart C, including all offenses adopted from Title 37, "Hawaii Revised Statutes," as they now appear or as they may be amended or recodified. Any person convicted of an attempt to commit an offense shall be subject to the same appropriate penalties authorized under §§ 762.40 through 762.49 for the commisison of the offense attempted, except that attempts of all offenses adopted under § 762.16, except those which are subject, under Title 37, "Hawaii Revised Statutes," as it now appears or as it may be amended or recodified, to a penalty of imprisonment of six months or less or a fine of not more than $500, shall be punished as directed by appropriate sections of title 37, "Hawaii Revised Statutes," as they now appear or as they may be amended or recodified.

§ 762.40 Penalties for petty offenses.

Whoever is found guilty of a violation of any petty offense under this subpart, other than § 762.28(b) through (h), is subject to a fine of not more than $500 or imprisonment for not more than six months, or both.

§ 762.42 Penalties for motor vehicle violations.

Whoever is found guilty of a violation of any one of § 762.28 (b) through (h), is subject to a fine of not more than $100, imprisonment of not more than 30 days, or suspension or revocation of his privilege to drive a motor vehicle aboard U.S. Naval Station, Midway Island, or any combination of, or all of, these punishments.

§ 762.44 Contempt.

Judges of the Midway Islands Court may, in any criminal case or proceeding, punish any person for disobedience of any order of the court, or for any contempt committed in the presence of the court, by a fine of not more than $100, or imprisonment of not more than 30 days, or both.

Subpart D—Midway Islands Court; Rules of Criminal Procedure

§ 762.50 Establishment; members; sessions.

(a) There is created a "Midway Islands Court" which is vested with the judicial authority provided in this Part 762. The court shall consist of such Navy judge advocates as are designated by the Commanding Officer, U.S. Naval Station, Midway Island, or such other command as may be designated by the Commander in Chief, U.S. Pacific Fleet. In the absence of an appointment to the contrary, the most senior in date of rank of those appointed shall act as senior judge.

(b) The Senior Judge shall appoint someone under his authority to act as Clerk of the Court who will be responsible for maintaining a public docket containing such information as the Senior Judge may prescribe.

(c) Sessions of the court are held on the Midway Islands at times and places designated by the Senior Judge.

(d) Normally, not more than one judge shall be required to hear any individual case.

§ 762.52 Attorney for the United States.

The Senior Judge may appoint any judge advocate or attorney to represent the United States in any criminal case in the Midway Islands Court or on appeal to the Commandant, Fourteenth Naval District, or such other command as may be designated by the Commander in Chief, U.S. Pacific Fleet.

§ 762.54 Criminal jurisdiction.

The Midway Islands Court has jurisdiction over all petty offenses and other minor violations of this Part 762. The United States District Court for the District of Hawaii shall have jurisdiction over all other offenses adopted under § 762.16, over offenses against the laws of the United States, and over those offenses committed within the special maritime jurisdiction contained in the Act of June 15, 1950 (ch. 253, 64 Stat. 217).

§ 762.55 Venue.

Trial of all offenses under the jurisdiction of the Midway Islands Court shall be had at the U.S. Naval Station, Midway Island; trial of all other offenses shall be in the United States District Court for the District of Hawaii.

§ 762.56 Rules of criminal procedure.

(a) Sections 762.56 through 762.79 govern the procedure in criminal proceedings in the Midway Islands Court. They shall be construed to ensure simplicity in procedure and fairness in administration, and to eliminate unjustifiable expenses and delay.

(b) The judge of the court who presides at any trial or other criminal proceeding is responsible for the making of an appropriate record of the proceeding.

§ 762.58 Release prior to trial and bail.

(a) The release of any person arrested on the Midway Islands for a violation of this Part 762 shall be in accordance with 18 U.S.C. 3146 as it now appears or as it may be amended or recodified.

(b) When an offense has been charged by a citation issued by a security patrolman, shore patrolman, or other duly designated peace officer or the Commanding Officer, U.S. Naval Station, Midway Island, bail shall be set in the amount prescribed by the Senior Judge for the violation. The bail shall be paid in cash to the Clerk of the Court. The bail may be forfeited by the accused and the proceedings thereby terminated in the case of a violation of § 762.28 that does not involve a moving vehicle collision or intoxication while driving, or with permission of the court in the case of any other offense charged by citation pursuant to § 762.84.

§ 762.62 Information.

(a) Any petty offense may be prosecuted by a written information signed by the attorney charged with prosecuting the case. If, however, the offense is one for which issue of a citation is authorized by this Part 762 and a citation for the offense has been issued, the citation serves as the information. Offenses against the laws of the United States, offenses committed against the laws made applicable by the Act of June 15, 1950 (ch. 253, 64 Stat. 217), and offenses adopted under § 762.16, except those which are subject, under Title 37, "Hawaii Revised Statutes," as it now appears or as it may be amended or recodified, to a penalty of imprisonment for six months or less or a fine of not more than $500, or both, shall be referred to the United States Attorney, Hawaii, for appropriate disposition.

(b) A copy of the information shall be delivered to the accused or his counsel as soon as practicable after it is filed.

(c) Each count of an information may charge one offense only and must be particularized sufficiently to identify the place, the time, and the subject matter of

the alleged offense. It shall refer to the provision of law under which the offense is charged, but any error in this reference or its omission may be corrected by leave of court at any time before sentence and is not grounds for reversal of a conviction if the error or omission did not mislead the accused to his prejudice.

§ 762.64 Motions and pleas.

(a) Upon motion of the accused at any time after filing of the information or copy of citation, the court may order the prosecutor to allow the accused to inspect and copy or photograph designated books, papers, documents, or tangible objects obtained from or belonging to the accused, or obtained from others by seizure or process, upon a showing that the items sought may be material to the preparation of his defense and that the request is reasonable.

(b) When the court is satisfied that it has jurisdiction to try the accused as charged, it shall require the accused to identify himself and state whether or not he has counsel. If he has no counsel, but desires counsel, the court shall give him a reasonable opportunity to procure counsel. If he cannot afford counsel or is unable to procure counsel after reasonable efforts have been expended, the court shall advise him of his right to have counsel appointed, and shall appoint a judge advocate or other lawyer counsel for the accused unless the accused shall have made a voluntary and intelligent waiver of his right to counsel.

(c) When both sides are ready for arraignment, or when the court determines that both sides have had adequate opportunity to prepare for arraignment, the court shall read the charges to the accused, explain them (if necessary), and, after the reading or stating of each charge in court, ask the accused whether he pleads "guilty" or "not guilty." The court shall enter in the record of the case the plea made to each charge.

(d) The accused may plead "guilty" to any or all of the charges against him, except that the court may at its discretion refuse to accept a plea of guilty, and may not accept a plea without first determining that the plea is made voluntarily and with understanding of the nature of the charge.

(e) The accused may plead "not guilty" to any or all of the charges against him. The court shall enter a plea of not guilty if the answer of the accused to any charge is such that it does not clearly amount to a plea of guilty or not guilty.

(f) The accused may, at any stage of the trial, with the consent of the court, change a plea of not guilty to one of guilty. The court shall then proceed as if the accused had originally pleaded guilty.

(g) Nothing contained in this subpart shall be construed to diminish any additional rights afforded military personnel under the Uniform Code of Military Justice.

§ 762.66 Trial.

(a) If the accused pleads not guilty or if a plea of guilty is not accepted by the court and a consequent plea of not guilty entered, the accused is entitled to a trial on the charges in accordance with the procedures prescribed in the Rules of Criminal Procedure for the United States District Courts, 18 U.S.C., except as otherwise provided in this Part 762. There is no trial by jury for petty offenses.

(b) All persons shall give their testimony under oath or affirmation. The Senior Judge shall prescribe the oath and affirmation that may be administered by any judge or the Clerk of the Court.

(c) Upon completion of the trial, the court shall enter a judgment consisting of a finding or findings and sentence or sentences, or discharge of the accused.

§ 762.68 Sentence.

(a) If the court accepts a plea of guilty to any charge or charges, it shall make a finding of guilty on that charge.

(b) After a finding of guilty is made, either by virtue of an accepted plea of guilty or as the verdict of the court after trial, the court:

(1) May delay sentencing pending receipt of any presentencing report ordered by it;

(2) Shall, before imposing sentence, hear such statements, whether written or oral, by the prosecution and defense, if any, in regards to mitigation, extenuation, previous good character of the accused, matters in aggravation, and permissible evidence of bad character of the accused. In this regard, the accused or his counsel may introduce any reasonable statement he wishes in mitigation or extenuation or any evidence of previous good character. The prosecution may introduce evidence in aggravation including prior federal, state, or Midway Islands convictions. The prosecution may introduce evidence of previous bad character only if the accused has introduced evidence of previous good character; and

(3) Shall thereafter impose any lawful sentence, including, a suspended or partially suspended sentence; revocation or suspension of any Midway Islands automobile, truck, motorcycle, or other motor vehicle, or boat or other vessel permit in cases involving violations of § 762.28; or placement of accused on probation.

§ 762.70 Subpoenas.

(a) The Clerk of the Court shall issue subpoenas for the attendance of witnesses. The subpoena must include the name of the court and the title, if any, of the proceeding, and shall command each person to whom it is directed to attend and give testimony at the time and place specified therein. The clerk shall issue a subpoena to a party requesting it, setting forth the name of the witness subpoenaed.

(b) The clerk may also issue a subpoena commanding the person to whom it is directed to produce the books, papers, documents, or other objects designated therein. The court may direct that books, papers, and documents designated in the subpoena be produced before the court at a time before the trial or before the time when they are to be offered in evidence. It may, upon their production, allow the books, papers, documents, or objects or portions thereof to be inspected by the parties and their representatives.

(c) Any peace officer or any other person who is not a party and who is at least 18 years of age may serve a subpoena. Service of a subpoena shall be made by delivering a copy thereof to the person named.

(d) This section shall in no way be construed to limit federal subpoena powers, laws, or rules.

§ 762.72 Appeals.

(a) The defendant in any criminal case may appeal from any judgment of the Midway Islands Court to the Commandant, Fourteenth Naval District, or such other command as may be designated by the Commander in Chief, U.S. Pacific Fleet, by filing a notice of appeal with the Senior Judge, and serving a copy on the attorney or judge advocate who represented the United States at trial.

(b) The notice must be served and filed within 15 days after the judgment of the Midway Islands Court.

(c) Upon receiving a notice of appeal, with proof of service on the attorney or judge advocate who represented the United States at trial, the Senior Judge shall forward the record of the case to the Commandant, Fourteenth Naval District.

(d) The appellant must serve and file a memorandum with the Commandant, Fourteenth Naval District, within 10 days after filing notice of appeal setting forth the grounds for appeal. The attorney or judge advocate who represented the United States at trial may file a reply memorandum within 10 days thereafter.

(e) The Commandant, Fourteenth Naval District, may affirm, dismiss, or modify the order of the court, or exercise any of the other powers of the court. The judgment of the Commandant, Fourteenth Naval District, is final.

(f) Cases tried in the United States District Court for the District of Hawaii shall be subject to federal laws and rules applicable to appeals.

§ 762.74 New trial.

A judge of the court may order a new trial as required in the interest of justice, or vacate any judgment and enter a new one, on motion made within a reasonable time after discovery by the moving party of matters constituting the grounds upon which the motion for a new trial or vacation of judgment is made.

Subpart E—Warrants; Arrests; Special Procedures

§ 762.80 Warrants.

(a) *Arrest warrants.* (1) Any judge of the Midway Islands Court may issue a warrant for arrest if, upon complaint, it appears that there is probable cause to believe an offense has been committed and that the person named in the warrant has committed it. Probable cause, as used herein, means that there exist facts which are sufficient to lead a reasonably prudent and cautious man to a natural

conclusion that the person to be arrested committed the offense for which he is to be arrested. The issuing officer shall:

(i) Place the name of the person charged with the offense in the warrant, or, if his name is not known, any name or description by which he can be identified with reasonable certainty;

(ii) Sign the warrant;

(iii) Describe in the warrant the offense charged;

(iv) Issue the warrant to a security patrolman, shore patrolman, or other duly designated peace officer for execution; and

(v) Place in the warrant a command that the person charged with the offense be arrested and brought before him.

(2) Each person making an arrest on the Midway Islands shall take the arrested person, without unnecessary delay, before the Commanding Officer, U.S. Naval Station, Midway Island, or a judge of the Midway Islands Court, as appropriate.

(3) The official before whom an arrested person is brought shall inform him of the complaint against him. The official shall also advise the arrested person that he has the right to remain silent and make no statement; that any statement made, whether oral or written, may be used against him, that he has the right to consult with a lawyer and to have a lawyer with him during questioning and to seek advice before answering any questions; that he may employ civilian counsel of his own choice and at his own expense; that if he cannot afford a lawyer, or is a service member, the court will appoint one for him if he so desires; and that, if he decides to answer questions, he has the right to stop answering at any time and terminate the interrogation. Before any security patrolman, shore patrolman, or other duly designated peace officer questions any person arrested, he must advise the arrested person of his rights, as set forth above, whether such questioning occurs before or after the arrested person is brought before the appropriate official as designated above in this section. No warnings need be given, however, prior to general on-the-scene questioning or identification inquiries.

(b) *Search warrants.* (1) Any judge of the Midway Islands Court may issue a warrant for search and seizure, if, after dispassionate and impartial consideration of all evidence, information, and circumstances involved, probable cause is deemed to exist. Probable cause, as used herein, means reliable information that would lead a reasonably prudent and cautious man to a natural belief that:

(i) An offense probably is about to be, is being, or has been committed;

(ii) Specific fruits or instrumentalities of the crime, contraband, or evidence exist; and

(iii) Such fruits, instrumentalities, contraband, or evidence are probably in a certain place.

(2) If, after considering all information, the judge shall decide to issue a search warrant, such warrant shall specifically include the following information:

(i) The time and date the warrant was requested;

(ii) The name and capacity of the person, official, security patrolman, shore patrolman, or other duly designated peace officer requesting the warrant;

(iii) The name and address of the person(s) suspected and the specific offense(s) of which he is suspected;

(iv) The address, place, or structure which is to be searched;

(v) The general nature of the items intended to be seized;

(vi) The information presented or reasons for suspecting the suspected person(s) in general; and

(vii) An authorization to search the described place for the property specified and, if the property is found there, to seize it, followed by the date, time, capacity, and signature of the judge issuing such warrant.

(3) A search warrant must be executed and returned to the issuing authority within five days after date of issuance. A search warrant executed within the five-day period shall be deemed to have been timely executed and no further showing of timeliness need be made.

(4) Security patrolmen, shore patrolmen, and other duly designated peace officers or other designated personnel conducting searches shall do so in accordance with the issued warrant.

(5) Any property seized as a result of a search or in connection with an alleged offense (unless property is highly perishable) is to be retained in a secure place pending trial in accordance with the orders of the court. All seized property shall be securely tagged with the following information:

(i) Date seized;

(ii) Property searched and location of seized article(s) when so seized;

(iii) Person ordering search and warrant number;

(iv) Signatures of person searching and witness; and

(v) Place where property is now located and names and addresses of any persons who have had custody thereof prior to deposit in the secure place required by this paragraph. A complete chain of custody record is to be kept.

(6) The property must be produced in court, if practicable. At the termination of the trial, the court shall restore the property or the funds resulting from the sale of the property to the owner, or make such other proper order as may be required and incorporate its order in the record of the case.

(c) *Sanitation and fire prevention inspection.* (1) Any judge of the Midway Islands Court may issue a warrant to inspect property on the Midway Islands for purposes of maintaining sanitation and fire prevention.

(2) Such warrant shall indicate:

(i) The time and date the warrant was requested;

(ii) The name and capacity of the person requesting the warrant;

(iii) Property description or address of place or structure to be inspected;

(iv) General purpose of inspection;

(v) Date and time inspection intended to be made; and

(vi) An authorization to inspect the described place for the purpose specified, followed by the date, time, capacity, and signature of judge issuing the warrant.

§ 762.82 Arrests.

(a) Any person may make an arrest on the Midway Islands, without a warrant, for any crime (including a petty offense) that is committed in his presence.

(b) Any security patrolman, shore patrolman, or other duly designated peace officer may, without a warrant, arrest any person on the Midway Islands who violates any provision of this Part 762 or commits a crime that is a violation of the laws of the United States or the laws made applicable to the Midway Islands under the Act of June 15, 1950 (ch. 253, 64 Stat. 217), in his presence, or that he has probable cause to believe that person to have committed.

(c) In making an arrest, a security patrolman, shore patrolman, or other duly designated peace officer must display a warrant, if he has one, or otherwise clearly advise the person arrested of the violation alleged, and thereafter require him to submit and be taken before the appropriate official on the Midway Islands.

(d) In making an arrest, a security patrolman, shore patrolman, or other duly designated peace officer may use only the degree of force needed to effect submission, and may remove any weapon in the possession of the person arrested.

(e) A security patrolman, shore patrolman, or other duly designated peace officer may, whenever necessary to enter any building, vehicle, aircraft, or vessel to execute a warrant of arrest, force an entry after verbal warning.

(f) A security patrolman, shore patrolman, or other duly designated peace officer may force an entry into any building, vehicle, aircraft, or vessel whenever:

(1) It appears necessary to prevent serious injury to persons or damage to property, and time does not permit the obtaining of a warrant;

(2) To effect an arrest when in hot pursuit; or

(3) To prevent the commission of a crime which he reasonably believes is being committed or is about to be committed.

§ 762.84 Citation in place of arrest.

In any case in which a security patrolman, shore patrolman, or other duly designated peace officer may make an arrest without a warrant, he may, under such limitations as the Commanding Officer may impose, issue and serve a citation, or serve a citation issued by the Commanding Officer, on a person in place of arresting him if the officer considers that the public interest does not require an arrest. The citation must briefly describe the offense charged and direct the accused to appear before the

Midway Islands Court at a designated time and place.

§ 762.86 Abatement of nuisance.

Whenever the Commanding Officer determines that, on any premises on the Midway Islands, a condition exists that is unsanitary or hazardous, that may be injurious to the public, or is otherwise a nuisance, he may order the condition abated. If the legal custodian of the premises concerned does not take action to abate the nuisance within 30 days after the order is issued, the Commanding Officer may enter on the premises and abate the nuisance for, and at the expense of, the custodian.

Subpart F—Registration and Permit Regulations

§ 762.90 Registration of certain property.

(a) Each person who has custody of any of the following on the Midway Islands shall register it with the Commanding Officer:

(1) A privately owned motor vehicle;

(2) A privately owned boat;

(3) An animal;

(4) Any device, weapon, or instrument designed for inflicting bodily injury, including a gun, pistol, or other firearm operated by air, gas, spring, or otherwise;

(5) Any narcotic or dangerous drug not obtained on prescription, and all poisons other than commonly used household poisons or toxic substances; or

(6) Any known explosive.

(b) Each person who obtains custody of an article described in paragraphs (a) (4), (5), or (6) of this section shall register it immediately upon obtaining custody. Each person who obtains custody of any other article described in paragraph (a) of this section shall register it within 10 days after obtaining custody.

§ 762.92 Permits.

Subject to reasonable restrictions and conditions that he considers appropriate, the Commanding Officer, U.S. Naval Station, Midway Island, may require a Midway Islands permit for the following:

(a) Any business, commercial, or recreational activity conducted for profit, including a trade, profession, calling, or occupation, or an establishment where food or beverage is prepared, offered, or sold for human consumption (except for personal or family use);

(b) The practice of any medical profession, including dentistry, surgery, osteopathy, and chiropractic;

(c) The erection of any structure or sign, including a major alteration or enlargement of an existing structure;

(d) The discharge of explosives or fireworks or of firearms, guns, or pistols operated by air, gas, spring, or otherwise, or any other weapon;

(e) The burial of any human or animal remains, except that fish and bait scrap may be buried at beaches where fishing is permitted without obtaining a permit;

(f) Keeping or maintaining any animal, including dogs;

(g) All vehicles (including bicycles), and operators thereof, except aircraft. The operator of a vehicle shall display his permit or permit number on the vehicle in a place and manner prescribed by the Commanding Officer;

(h) Boats and boat operators. The operator of a boat or other vessel shall display his permit or permit number on or in the vessel in a place and manner prescribed by the Commanding Officer;

(i) Food handlers;

(j) Drugs and narcotics not obtained on prescription, and poisons other than commonly used household poisons or toxic substances; or

(k) Building construction.

§ 762.94 Expiration of permits.

(a) Each Midway Islands permit expires on the earliest of the following dates:

(1) Two years after the date it is issued;

(2) The date specified on the permit;

(3) In the case of a motor vehicle, boat, or other vessel, or firearm, the date its custody is transferred to any person other than the holder of the permit therefor; or

(4) The date it is revoked by the Commanding Officer.

(b) Notwithstanding paragraph (a) (1) of this section, the Commanding Officer may issue a permit for a period longer than two years to coincide with the terms of any agreement between the Department of the Navy and the permit holder, applicable to the Midway Islands.

§ 762.96 Revocation or suspension of permits.

(a) The Commanding Officer may, after notifying the holder of a Midway Islands permit and giving him an opportunity to be heard, order the permit suspended or revoked for cause, including:

(1) Lack of physical fitness required to hold the permit;

(2) Lack of roadworthiness of a vehicle, or of seaworthiness of a boat or other vessel;

(3) Lack of need for the permit;

(4) Breach of any term or condition of the permit; or

(5) Conviction for violation of any regulation of this Part 762 where the violation is related to activities conducted under the permit.

(b) In any case in which he determines that an emergency exists requiring immediate action, the Commanding Officer may issue an order of suspension or revocation, effective immediately, without notice. However, the permit holder may, within 10 days after the suspension or revocation, request a hearing. If he so requests a hearing, he is entitled to it. The emergency order is not stayed pending hearing.

Subpart G—Civil Small Claims Law

§ 762.100 Applicable law and jurisdiction over small claims.

(a) The Midway Islands Court shall have jurisdiction over civil cases for the recovery of money only where the amount claimed does not exceed $500 exclusive of the interest and costs except as provided by § 762.108.

(b) The court's jurisdiction is further limited in that no such claim cognizable under paragraph (a) of this section shall be within the court's jurisdiction unless:

(1) The claim arises or has arisen on the Midway Islands;

(2) All plaintiffs and all defendants reside, at the time of trial, on the Midway Islands; and

(3) The claim does not fall within the special maritime jurisdiction under the Act of June 15, 1950 (ch. 253, 64 Stat. 217).

(c) Actions shall be commenced and maintained in the Midway Islands Court under the procedures set out below and conducted in such a manner as to do substantial justice and equity between the parties. When acting on such actions, the court shall be termed the Small Claims Court.

§ 762.102 Small claims procedure; complaint and service.

(a) Actions shall be commenced in the court by the filing of a statement of claim, in concise form and free of technicalities. All claims shall be verified by the claimant, whether as a party plaintiff or counterclaimant, or by his agent, by oath or affirmation in the form herein provided, or its equivalent. The Clerk of the Court shall, at the request of an individual, prepare the statement of claim and other papers required to be filed in an action in the court, but his services shall not be available to a corporation, partnership, or association, or to any individual proprietorship in the preparation of the statements or other papers. A copy of the statement of claim and verification shall be made a part of the notice to be served upon the defendant named therein. The mode of service shall be by personal service, by registered mail, or by certified mail with return receipt.

(b) When notice is to be served by registered mail or by certified mail, the clerk shall enclose a copy of the statement of claim, verification, and notice in an envelope addressed to the defendant, prepay the postage with funds obtained from plaintiff, and mail the papers forthwith, noting on the records the day and hour of mailing. When the receipt is returned with the signature thereon of the party to whom addressed, the clerk shall attach it to the original statement of claim, and it shall constitute prime facie evidence of personal service upon the defendant.

(c) When notice is served personally, the server shall make proof of service by affidavit sworn to before the Clerk of the Court or before any notary public, showing the time and place of the service.

(d) The actual cost of service shall be taxable as costs.

(e) The statement of claim, verification, and notice shall be in the following or equivalent form:

IN THE MIDWAY ISLANDS SMALL CLAIMS COURT

_____
(Plaintiff)

(Address)

vs. _____)

_____
(Defendant)

STATEMENT OF CLAIMS

(Here the claimant, whether as party plaintiff or counterclaimant, or at his request the clerk, will insert a concise statement of the plaintiff's claim, and the original, to be filed with the clerk, may, if action is on a contract, express or implied, be verified by the plaintiff or his agent, as follows:

THE MIDWAY ISLANDS SS

_____being first duly sworn on oath says the foregoing is a just and true statement of the amount owing by defendant to claimant, whether as party plaintiff or counterclaimant, exclusive of all set-offs and just grounds of defense.)_____
[Plaintiff (or agent)]

Subscribed and sworn to before me this ____ day of _____, 19____.

_____
Clerk (or notary public)

NOTICE

To:_____
Defendant

_____
Home address

_____
Business address

You are hereby notified that _____ has made a claim and is requesting judgment against you in the sum of _____ dollars ($_____), as shown by the foregoing statement. The court will hold a hearing upon this claim on _____ at _____ m. in the Small Claims Court at _____
(address of court)

You are required to be present at the hearing in order to avoid judgment by default.

If you have witnesses, books, receipts, or other writings bearing on this claim, you should bring them with you at the time of the hearing.

If you wish to have witnesses summoned, see clerk at once for assistance.

If you admit the claim, but desire additional time to pay, you must come to the hearing in person and state the circumstances to the court.

You may come with or without an attorney.

(Seal) _____
Clerk of the Court
Midway Islands Court

(f) The foregoing verification entitles the plaintiff to a judgment by default, without further proof, upon failure of defendant to appear, if the claim of the plaintiff is for a liquidated amount. If the amount is unliquidated, the plaintiff shall be required to present proof of his claim.

(g) The clerk shall furnish the plaintiff with a notice of the day and hour set for the hearing. The hearing shall not be less than 15 days nor more than 30 days from the date of the filing of the action unless a continuance is granted by the judge for good cause shown. All actions filed in the court shall be made returnable therein.

§ 762.104 Time limitations.

All claims must be commenced as set out in § 762.102, within two years after the claim arises. A claim for money arises when it is due, owing, and unpaid.

§ 762.106 Costs and fees; waiver.

The fee for issuing summons and copies, trial, judgment, and satisfaction in an action in the Small Claims Court shall be not more than $5. Other fees shall be as the court prescribes. The judge may waive the prepayment of costs or the payment of costs accruing during the action upon the sworn statement of the plaintiff or upon other satisfactory evidence of his inability to pay the costs. When costs are so waived the notation to be made on the records of the court shall be "Prepayment of costs waived" or "Costs waived." The terms "pauper" or "in forma pauperis" may not be employed in the court. If a party fails to pay accrued costs, though able to do so, the judge may deny him the right to file a new case in the court while the costs remain unpaid, and likewise deny him the right to proceed further in any case pending in the court.

§ 762.108 Set-off or counterclaim; pleading; retention of jurisdiction.

If the defendant, in an action in the Small Claims Court, asserts a set-off or counterclaim, the judge may require a formal and concise plea of set-off to be filed, or may waive the requirement. If the plaintiff requires time to prepare his defense against the counterclaim or set-off, the judge may continue the case for that purpose. When the set-off or counterclaim is for more than the jurisdictional limit of the Small Claims Court, as provided by § 762.100, but is for less than $1000, the action shall remain in the Small Claims Court and be tried therein in its entirety. No set-off or counterclaim for an amount greater than $1000 may be asserted in the Small Claims Court.

§ 762.109 Jury trial; demand.

In a case filed or pending in the Midway Islands Court under § 762.100 in which a party entitled to a trial by jury under amendment VII, United States Constitution, files a demand therefor, the case shall be assigned to and tried in the United States District Court for the District of Hawaii under the procedure provided for jury trials in that court.

§ 762.110 Pre-trial settlement.

On the return day specified by § 762.102(g), or at such later time as the judge sets, the trial shall be had. Immediately prior to the trial of a case, the judge shall make an earnest effort to settle the controversy by conciliation. If no settlement is effected, the judge shall proceed with the hearing on the merits pursuant to § 762.112.

§ 762.112 Trial.

(a) The parties and witnesses shall be sworn. In any case in which the civil rights, powers, and duties of any person on the Midway Islands are not otherwise prescribed by the laws of the United States or the laws made applicable under the Act of June 1950 (ch. 253, 64 Stat. 217), the judge shall conduct the trial in such manner as to do substantial justice between the parties according to the rules of substantive law, as contained in the "Hawaii Revised Statutes," as they now appear or as they may be amended or recodified, and Hawaii case law. In this regard, the judge is not bound by statutory provisions or rules of practice, procedure, pleading, or evidence, except provisions related to privileged communications.

(b) If the defendant fails to appear, judgment shall be entered for the plaintiff by default as provided by § 762.102(f), or under rules of court, or on ex-parte proof. If the plaintiff fails to appear, the action may be dismissed for want of prosecution, or a nonsuit may be ordered, or defendant may proceed to trial on the merits, or have default judgment entered in his favor on any counterclaim filed in the manner provided herein for a plaintiff, or the case may be continued or returned to the files for further proceedings on a later date, as the judge directs. If both parties fail to appear, the judge may return the case to the files, or order the action dismissed for want of prosecution or make any other disposition thereof as justice requires.

(c) Notwithstanding any provision of law requiring the licensing of practitioners, any person may, with the approval of the court, appear on behalf of himself or another in the Small Claims Court. The services of an unlicensed person appearing under this paragraph shall be without compensation, either by way of direct fee, contingent fee, or otherwise.

(d) The judge of the court who presides at any trial is responsible for the making of an appropriate record of the proceeding.

§ 762.114 Judgments.

After trial, the judge may immediately render his decision and enter judgment or take the case under submission. In all cases, the judge should render a decision and enter appropriate judgment within 20 days after the close of the trial.

§ 762.116 Award of costs.

In any action pursuant to this subpart the award of costs is in the discretion of the court, which may include therein the reasonable cost of bonds and undertakings, and other reasonable expenses incident to the action, incurred by either party. No attorneys' fees or commissions shall be allowed or awarded by any judgment of the Small Claims Court.

§ 762.118 No appeal.

There shall be no appeal from a judgment of the court, but the court may alter or set aside any judgment upon application of either party after review of the record.

§ 762.120 Judgment creditors and remedies.

(a) After any final judgment is rendered by the court, the judgment debtor concerned may deposit the sum adjudged owed with the court for payment of the claim, pay the judgment creditor directly, or make such other fair and reasonable agreement for payment or settlement of the claim with the judgment creditor. Payment, in full or by agreement or settlement between the parties after final judgment has been rendered, shall satisfy the judgment and extinguish the claim.

(b) If voluntary payment is not made by the judgment debtor after final judgment is rendered, in an action pursuant to §§ 762.100 through 762.113, the judge shall, upon motion of the party obtaining judgment, order the appearance of the party against whom the judgment has been entered, but not more often than once each week for four consecutive weeks, for oral examination under oath as to his financial status and his ability to pay the judgment, and the judge shall make such supplementary orders as seems just and proper to effectuate the payment of the judgment upon reasonable terms.

(c) Any final judgment of the Small Claims Court shall upon order of the court become a statutory lien upon any and all personal property owned by the judgment debtor concerned and located on the Midway Islands. Such lien may be enforced by attachment, levy, judicial sale, or as the court may otherwise direct.

§ 762.126 Parties.

Wherever the term party or parties appears herein, or any reference is made to individuals desiring to present a claim, then such term or terms of reference shall mean and include a party defendant having a counterclaim, offset, or crossclaim to present in the action.

§ 762.128 Forms and public information.

The Midway Islands Court shall cause to be published an information booklet or sheet describing, in language readily understandably by a layman, the procedures of the Small Claims Court, the remedies available upon judgment in the Small Claims Court, and such other information as will facilitate the utilization of the small claims procedure; and shall also cause to be made and printed such standardized forms as may be utilized throughout the small claims procedure prior to, upon, and after judgment.

Subpart H—Savings Clause

§ 762.130 Severability of subparts, sections, paragraphs, or provisions.

In the event that any subpart, section, paragraph, or provision of this Part 762 shall be declared unconstitutional or superseded by applicable federal legislation, the remainder shall nevertheless remain valid and shall be applied so as to be consistent with such constitutional provisions or overriding legislation.

Dated: July 9, 1976.

JOHN S. JENKINS,
Captain, JAGC, U.S. Navy, Assistant Judge Advocate General.

[FR Doc.76-20681 Filed 7-16-76;8:45 am]

Title 33—Navigation and Navigable Waters

CHAPTER I—COAST GUARD, DEPARTMENT OF TRANSPORTATION

[CGD 3-76-14]

PART 127—SECURITY ZONES

Establishment of Security Zone, Penns Landing, Delaware River, Philadelphia, Pennsylvania

Notice is hereby given that K. G. WIMAN, Captain, United States Coast Guard, Captain of the Port, Philadelphia, Pa., has issued the following order establishing a Security Zone at Penns Landing, Delaware River, Philadelphia, Pennsylvania:

This amendment to the Coast Guard's Security Zone Regulations, establishes the West German Destroyer *Hessen* and the navigable waters within 50 yards thereof as a security zone. This security zone is established in conjunction with the West German Chancellor's visit aboard the West German Destroyer *Hessen*.

This amendment is issued without publication of a notice of proposed rule making and this amendment is effective in less than 30 days from the date of publication, because this security zone involves a foreign affairs function of the United States.

In consideration of the foregoing, Part 127 of Title 33 of the Code of Federal Regulations is amended by adding § 127.348, to read as follows:

§ 127.348 Penns Landing, Delaware River, Philadelphia, Pennsylvania.

The waters within the following boundary is a security zone. The area within 50 yards of the West German Destroyer *Hessen*.

(40 Stat. 220, as amended, 1, 63 Stat. 503, 6(b), 80 Stat, 937, 50 U.S.C. 191, 14 U.S.C. 91, 49 U.S.C. 1655(b). E.O. 10173, E.O. 10277, E.O. 10352, E.O. 11249. 3 CFR, 1949-1953 Comp. 356; 778, 873, 3 CFR, 1964-1965 Comp. 349, 33 CFR Part 6, 49 CFR 1.46(b).)

Effective date: This amendment is effective from 11:30 a.m. July 17, 1976 to 1:30 p.m. July 17, 1976.

Dated: July 13, 1976.

A. F. FUGARO,
Rear Admiral, U.S. Coast Guard, Chief, Office of Marine Environment and Systems.

NOTE.—This document is republished without change from the issue of Friday, July 16, 1976.

[FR Doc.76-20788 Filed 7-15-76;8:45 am]

Title 38—Pensions, Bonuses, and Veterans' Relief

CHAPTER I—VETERANS ADMINISTRATION

PART 3—ADJUDICATION

Pension, Compensation, and Dependency and Indemnity Compensation; Aid and Attendance

On pages 19353 and 19354 of the FEDERAL REGISTER of May 12, 1976, there was published a notice of proposed regulatory development to change provisions in Part 3 of Title 38, Code of Federal Regulations, relating to claims for additional benefits based on the claimant's need for regular aid and attendance. Interested persons were given 30 days in which to submit comments, suggestions, or objections regarding the proposed regulation.

Two written comments on the proposed change were received. One favored the proposed change. The other comment did not relate to the proposed change but suggested that the aid and attendance allowance not be reduced during hospitalization and that either all or part of the aid and attendance allowance be paid to the individual or nursing home actually furnishing the aid and attendance services. This suggestion cannot be adopted in the absence of statutory change.

Therefore, the proposed amendment is hereby adopted without change and is set forth below.

Effective date. Section 3.352 is effective July 13, 1976.

Approved: July 13, 1976.

R. L. ROUDEBUSH,
Administrator.

1. Section 3.352 is revised to read as follows:

§ 3.352 Determination of permanent need for regular aid and attendance and "permanently bedridden".

(a) *Basic criteria.* The following will be accorded consideration in determining the need for regular aid and attendance (§ 3.351(c)(3)): inability of claimant to dress or undress himself (herself), or to keep himself (herself) ordinarily clean and presentable; frequent need of adjustment of any special prosthetic or orthopedic appliances which by reason of the particular disability cannot be done without aid (this will not include the adjustment of appliances which normal persons would be unable to adjust without aid, such as supports, belts, lacing at the back, etc.); inability of claimant to feed himself (herself) through loss of coordination of upper extremities or through extreme weakness; inability to attend to the wants of nature; or incapacity, physical or mental, which requires care or assistance on a regular basis to protect the claimant from hazards or dangers incident to his or her daily environment. "Bedridden" will be a proper basis for the determination. For the purpose of this paragraph "bedridden" will be that condition which,

through its essential character, actually requires that the claimant remain in bed. The fact that claimant has voluntarily taken to bed or that a physician has prescribed rest in bed for the greater or lesser part of the day to promote convalescence or cure will not suffice. It is not required that all of the disabling conditions enumerated in this paragraph be found to exist before a favorable rating may be made. The particular personal functions which the claimant is unable to perform should be considered in connection with his or her condition as a whole. It is only necessary that the evidence establish that the claimant is so helpless as to need regular aid and attendance, not that there be a constant need. Determinations that the claimant is so helpless, as to be in need of regular aid and attendance will not be based solely upon an opinion that the claimant's condition is such as would require him or her to be in bed. They must be based on the actual requirement of personal assistance from others.

(b) *Attendance by relative.* The performance of the necessary aid and attendance service by a relative of the beneficiary or other member of his or her household will not prevent the granting of the additional allowance.

2. In § 3.353, paragraph (b) is revised to read as follows:

§ 3.353 Determinations of incompetency and competency.

* * * * *

(b) *Authority.* Rating agencies are authorized to make official determinations of competency and incompetency for the purpose of existing laws, VA regulations and VA instructions. Such determinations will be controlling for purposes of insurance (38 U.S.C. 722), the discontinuance and payment of amounts withheld because of an estate in excess of $1,500 (§ 3.557(b)), and, subject to § 13.56 of this chapter, direct payment of current benefits. Where the veteran is rated incompetent the Veterans Services Officer of jurisdiction will be informed of the possible necessity for the appointment or recognition of a fiduciary. The Veterans Services Officer will develop information as to the veteran's social, economic and industrial adjustment. If the Veterans Services Officer upon review of this evidence concurs in the rating of incompetency he or she will proceed to effect the appointment of a fiduciary, or if the veteran is married, to recommend release of payments to the veteran's wife (husband) as provided in § 13.57 of this chapter, or recommend payment in accordance with § 13.56 of this chapter. The recommendation will be effectuated. If the Veterans Services Officer is of the opinion that the veteran is capable of administering the funds payable without limitation, the evidence on which that opinion is based will be referred to the rating agency with a statement as to his or her conclusion. The rating agency will consider this evidence together with all other evidence of record in determining whether its prior decision should be revised or continued. Reexamination may be requested as provided in § 3.327(d) if necessary to properly evaluate the extent of disability.

* * * * *

[FR Doc.76-20738 Filed 7-16-76;8:45 am]

Title 40—Protection of Environment

CHAPTER I—ENVIRONMENTAL PROTECTION AGENCY

SUBCHAPTER E—PESTICIDE PROGRAMS

[FRL 583-2; PP 5F1643 and 5F1644/R103]

PART 180—TOLERANCES AND EXEMPTIONS FROM TOLERANCES FOR PESTICIDE CHEMICALS IN OR ON RAW AGRICULTURAL COMMODITIES

S-[2-(Ethylsulfinyl)ethyl] O,O-Dimethyl Phosphorothioate

Correction

In FR Doc. 76-20347, appearing at page 28790 in the issue of Tuesday, July 13, 1976, the following changes should be made to the tabular material in the third column of page 28971:

1. The word "Plumbs" should read "Plums".

2. The following should be inserted after the entry for "Sheep, fat":

Sheep, mbyp	0.01

Title 47—Telecommunication

CHAPTER I—FEDERAL COMMUNICATIONS COMMISSION

[RM-2603, RM-2645]

PART 73—RADIO BROADCAST SERVICES

Table of Assignments, FM Broadcast Stations (Petersburg and Wrangell, Alaska)

JULY 9, 1976.

In the Order in the above-entitled proceeding, Mimeo No. 41258, which was released on June 25, 1976, and published in the FEDERAL REGISTER on June 30, 1976 (41 FR 26911), the amendments to the FM Table of Assignments, § 73.202 (b) of the Commission's rules, appearing in paragraph 9 of the *Order* should be amended to read as follows:

City	*Channel No.*
Alaska:	
Petersburg	*265A
Wrangell	*269A

FEDERAL COMMUNICATIONS COMMISSION,
VINCENT J. MULLINS,
Secretary.

[FR Doc.76-20729 Filed 7-16-76;8:45 am]

[Docket No. 20189; FCC 76-624]

PART 74—EXPERIMENTAL, AUXILIARY, AND SPECIAL BROADCAST, AND OTHER PROGRAM DISTRIBUTIONAL SERVICES

Remote Pickup Broadcast Stations

In the matter of amendment of Part 74, Subpart D (Remote Pickup Broadcast Stations) of the Commission's rules and regulations.

1. In its continuing effort concerning reregulation of the broadcasting service, the Commission released a notice of proposed rule making September 18, 1974, to amend in its entirety, Subpart D of Part 74 of the rules and regulations for Remote Pickup Broadcast Stations. The notice was based in part on a petition for rule making filed by the National Association of Broadcasters (NAB) (RM-1735).

2. Publication was made in the FEDERAL REGISTER on September 26, 1974. By order released on November 19, 1974, the dates for filing comments and reply comments were extended to January 20, 1975, and February 21, 1975, respectively.

3. The notice of proposed rule making looked toward amendments in nearly all aspects of licensing, frequency allocations, technical specifications, operating procedures, and administrative details of the operation of Remote Pickup Broadcast Stations, including Low Power Auxiliary Stations. Comments were filed by 26 parties, of which six represented non-broadcast interests, primarily licensees in the industrial radio services who were requesting that portions of the bands used for Remote Pickup Stations be reallocated to other services. There were four parties who submitted reply comments (see Appendix A).

ALLOCATION OF FREQUENCIES

4. The most controversial issue in the notice was the proposed subdivision of existing remote pickup frequency channels to obtain more channels with less bandwidth. These proposals drew dissenting comments from several broadcast licensees who believed the 100 kHz channels should be retained for "high fidelity" remote pickup stations since higher costs and poor quality of leased common carrier line circuits impede the transmission of live concert programs in high fidelity stereo. On the other hand, the non-broadcast parties submitting comments concur that not only should the existing remote pickup frequency bands be subdivided as proposed, but should be further subdivided and that all or portions of these bands should be reallocated to the land mobile services. The contentions of non-broadcasters can be combined and summarized as follows:

(A) Very few, if any, remote pickup frequencies are used for "high fidelity" music broadcasts so as to justify retention of 50 kHz channels for this exclusive purpose.

(B) Most of the communications on remote pickup frequencies are operational in nature such as dispatching news crews, similar to normal business station communications.

(C) Most of the "on air" program material other than helicopter traffic reports are carried or sent to the station by telephone circuits.

(D) "High fidelity" circuits are not required for on-the-spot news reports or many other types of remote talk programming. 25 kHz channels similar to those used in the land mobile services are adequate for these types of transmissions.

(E) Because of the large amount of spectrum allocated to broadcasting, remote pickup stations could be accommodated on a shared non-interference ba-

sis in other portions of the broadcast spectrum.

(F) Remote pickup stations are authorized to use several frequencies permitting licensees to switch channels to avoid interference. Industrial licensees are usually permitted to use only one assigned channel.

(G) Broadcast stations must also obtain frequencies in the business radio service for use in non-program related dispatching thus causing additional congestion on the industrial frequencies.

(H) For the most part, existing remote pickup frequencies are used primarily in the major population centers where there is a concentration of broadcast stations. In many parts of the nation, the remote pickup frequencies remain unused and only a small amount of the existing band allocations are actually necessary to accommodate broadcasters in a more than adequate manner.

5. On the other hand, the broadcast interests state that congestion on the existing remote pickup frequencies has reached a critical stage, particularly in the major cities. Interest in on-the-scene news reports, traffic reporting, and increased news and public affairs programming, requires that additional frequencies be made available. Major news events are covered by many broadcast stations having in simultaneous operation many remote pickup transmitters. Broadcasters claim they do attempt to maintain a higher quality of audio signal from their remote pickup stations than can be provided by narrow band equipment used in the land mobile services. Frequency sharing by remote pickup stations used by different licensees cannot be accomplished in the same manner as frequency sharing in the land mobile services.

6. It is the contention of NABER that the frequency occupancy records of the Commission for remote pickup stations are inadequate indications of actual channel overcrowding since each station may be licensed to use several frequencies even though it can transmit on only one frequency during a particular operation. NABER also believes that demands for new stations for remote pickup use is very small in proportion for the number of broadcast stations in operation and that the growth rate in the business radio services far exceeds that in the remote pickup broadcast service. The non-broadcast respondents to the notice are essentially stating that broadcast stations do not need all the spectrum allocated for remote pickup stations, and that a portion of that spectrum should be reallocated for use by other services.

7. The specific issue of spectrum reallocation for any bands now used either on a shared or exclusive use by broadcast auxiliary stations was not directly addressed in the notice, and was completely beyond the purpose of this proceeding. All suggestions or requests for reallocation in the comments would be more appropriate for a proceeding specifically addressed to that issue.[1] Therefore, it is inappropriate for use to either reallocate portions of the spectrum designated for remote pickup stations to other services, or reserve channels for future reallocation with this report and order.

8. Our experience in attempting to meet the continuing requests for new licenses for remote pickup stations, together with our action in this proceeding of extending eligibility for licensing of these stations to broadcast network entities and relaxation of certain existing restrictions on the use of these stations does not warrant any delay in providing additional frequency by splitting existing channels entirely within bands presently allocated exclusively for broadcast auxiliary stations. We are not, as suggested by Marti, making additional frequencies available for broadcast use by channel splitting in those bands shared with stations in the Industrial Radio Services. In fact, we are discouraging additional use of these frequencies by broadcasters through restrictions on new licensing.

9. There was general agreement among all respondents that dividing the existing remote pickup frequency 450 and 455 MHz bands into additional channels was desirable in order to make additional frequencies available for this service. Most broadcasters or their representatives told us that they were essentially in agreement with the changes as proposed, however, Mountain and others did question the need to allocate 50 kHz channels for operational communications or when narrow band land mobile type equipment is used by broadcasters. Many broadcasters are now using equipment designed for 25 kHz channels because it is readily available. WHME, Wheatstone, and Mountain also requested that we retain some wide band 100 kHz channels in the UHF bands to meet the needs of FM stations desiring to use remote facilities to broadcast the highest quality of high fidelity stereophonic programs. In this connection, there has been some interest in transmitting a composite stereophonic signal directly from the point of program origination to achieve the most faithful reproduction of the program at the listeners' homes. Consideration of this particular technique is not being considered in this proceeding because of its large channel requirements and other segments of the broadcast spectrum may be a more appropriate place for this purpose. However, we are preserving at this time, even if on a temporary basis, two 100 kHz channels in Group R for high fidelity programming. Also, the information before us in this proceeding does indicate that there is justification to allocate a number of general purpose UHF channels of 25 kHz bandwidth. In doing so we can increase the overall number of new available frequencies for assignment to 36. The twenty-four 25 kHz channels will be ideally suited for all operational communications or for transmission of voice programming where full audio fidelity is not essential. Since we are also expanding the definition of operational communications to include program related transmissions and extending licensing eligibility to networks as discussed in paragraphs 12 and 14, we believe that the allocation of some 25 kHz channels as well as 50 kHz channels for broadcast quality audio programming is desirable.

10. The changes being adopted will require that two frequencies now being used in the 450 and 455 MHz bands be vacated to accommodate the two 100 kHz channels, the eight 10 kHz channels, and the twenty-four 25 kHz channels being established. Licensees using the frequencies to be vacated may, without further authority from the Commission, select and use substitute frequencies of their choice within the same group by submitting a notice to the Commission reporting the alternate frequencies. Shift to the frequencies listed in Section 74.402 is to be completed within two years after the effective date of the amended rules.

FREQUENCY COORDINATION

11. SIRSA is concerned that applicants for remote pickup broadcast stations requesting use of frequencies primarily allocated to the Industrial Radio Services, are not required to follow the established frequency coordination procedures which must be followed by industrial license applicants. (See § 91.8(a) of the Commission's rules for the Industrial Radio Services). SIRSA points out that the new Industrial Stations will not be licensed to operate at a location less than 10 miles from an adjacent-channel station 15 kHz removed, and further contends that the 60 kHz wide bandwidth operation of remote pickup stations can cause harmful interference over as many as three to five 15 kHz assignments in the Industrial Services. We believe that there is some justification in SIRSA's request that consideration should be given to a more effective coordination for use of these shared frequencies. Remote pickup stations are permitted to use the 152 and 153 MHz frequencies only on the condition that no harmful interference is caused to the primary industrial users of those frequencies. The frequency coordination procedures required for the Industrial Services may not be appropriate for the broadcast services since such procedures are intended to avoid mutual interference between co-equal users. Broadcasters use these frequencies on a secondary basis and cannot cause inter-

[1] The Commission does have before it other proceedings looking toward reallocation of certain frequencies or additional sharing between the various classes of broadcast auxiliary and stations in the industrial services, including the use of wireless microphones in TV broadcast channels. See Dockets 20005, 20027, 20195, and RM-2475.

ference to the primary industrial stations using the same frequencies. Coordination procedures imply some degree of protection for stations requesting the use of a particular frequency which, in the case of secondary users, cannot be given. However, with the additional frequencies that are being made available in the 450 and 455 MHz bands for remote pickup station use, we do believe that it would be appropriate to no longer authorize new stations to utilize 60 kHz channels on frequencies designated primarily for use by other services. Consideration of a schedule for compulsory reduction in the authorized bandwidth, or changes in frequency assignments as well as appropriate frequency coordination procedures could be addressed in proceedings specifically covering these matters. In order to minimize interference to the Group K_1 frequencies, low power, auxiliary broadcast stations will not be authorized to use K_1 frequencies, nor will stations licensed to network entities. License applicants requesting the use of these frequencies for remote pickup stations must include with their applications statements showing what procedures will be taken to insure that interference will not be caused to stations in the industrial radio services.

ELIGIBILITY FOR LICENSING

12. Mutual points out that under existing and proposed eligibility rules for licensing of remote pickup stations to broadcast station licensees, Mutual is not eligible to have comparable facilities for originating program material for its affiliated stations as those networks owning broadcast stations. The other national networks use the remote pickup facilities of their owned stations in connection with production of programming for network distribution. Mutual must rely entirely on common carrier facilities or non-broadcast radio services. It would be most helpful to Mutual if it could also use remote pickup and low power auxiliary stations for remote news and sports programs. National Public Radio (NPR) previously has also requested special waivers to permit it to become a licensee of remote pickup stations. In restricting remote pickup licensing eligibility to licensees of broadcast stations it was our intention to prevent independent producers of specialized programs from adding additional congestion to the available frequencies. We must insure that frequencies would be available for use by broadcasters for all types of programming origination. We do believe that some consideration for the remote pickup needs of networks not owning stations is justified and that some mechanism can be provided to meet those needs. In doing so, however, it is necessary that we clearly define at this time those network entities that would be eligible as networks for licensing in the remote pickup services. We believe that this could be accommodated under the following criteria:

(A) The entity must produce daily programming for simultaneous transmission by ten or more broadcast stations.

(B) The network distribution circuits must be in continuous service to the affiliated stations at least twelve hours of each day.

(C) Transmissions of stations in the remote pickup services licensed to network entities must be in direct connection with their program production activities.

(D) To avoid additional congestion and possible interference to existing stations, such network entities will not be available for licensing to use frequencies in Group K.

PERMISSIBLE SERVICE

13. Cullum, Schuett, and ABES are particularly concerned about restrictions on permissible service in "operational communications." Schuett believes that we should permit remote pickup broadcast stations to be used for any communication related to the technical and administrative or other activities of the broadcast station. This would be similar to the uses permitted to licensees located outside the contiguous United States. Schuett says that the rules for the priority use of communications directly related to programming are sufficient to prevent interference. Cullum and ABES are concerned that the proposed rules appear to prohibit the use of remote pickup stations to dispatch a messenger to pick up program related materials which is permissible under the present rule. Cullum further contends that the proposed rules permit remote pickup stations to be used for the dispatching of broadcast crews to the location of an event only if an actual broadcast occurs. There may be some reason why the broadcast may not materialize. We agree that the proposed rules were not intended to indicate that the broadcast material must in fact materialize for every dispatch communications on a remote pickup station, and paragraph (d) will be modified by changing the words "* * * to be broadcast" to "* * * at which broadcast programming may originate."

14. We did not intend to restrict a remote broadcast station from being used in connection with bona fide programming functions. It would be difficult and even unnecessary for us to clearly define the differences between communications directly related to remote programming such as transporting personnel and equipment to the site of a broadcast from program related communications as dispatching a vehicle to pick up news film at a processing service. The changes recommended by Cullum are being made to clarify that all remotely originated transmissions may not necessarily be broadcast. We are further expanding the definition of operation communications to include programming activities of the licensee. We cannot remove all restriction on the use of remote pickup stations because of the limited frequencies that are currently available for this service, and the use of remote pickup stations for the other business and administrative activities (e.g. dispatching of salesmen and personal paging) not directly related to programming remain prohibited.

SPECIAL TEMPORARY AUTHORIZATIONS

15. NBC and NAB were concerned with the proposed § 74.433(f), which states that special temporary authority will not normally be granted to applicants for remote pickup stations so that the stations may be operated prior to the granting of the requested authorization. NAB suggests that the wording of the proposed rule be changed to show that special temporary authority may be granted pending Commission action on an application for regular authority upon a showing that there is a need for immediate operation (emphasis added). NBC supports the position of NAB and further states that if application processes should be unduly delayed, as occurs from time to time, the public is not served by forcing an applicant to delay initiation of a new service for lack of Commission authorization, even though it may be on a temporary basis. Although there may have been some misunderstanding that the proposed rule would be overrestrictive in the granting of special authorizations when there is need to meet an unforeseen circumstance, we do not agree that such authorizations should be routinely issued simply upon showing a "need" for immediate operation. The rule as proposed was to curtail the practice of license applicants routinely requesting special temporary authority to operate stations while the license application was being processed. As NBC points out, the system licensing procedures being adopted will hopefully shorten the application processing time, thus reducing the desire of applicants to request temporary authorization. However, such requests do add to the staff workload and interfere with the normal processing procedures. Nearly all applicants for licenses could make some showing for a need for immediate operation, even if it were for the routine programming activities of the applicant's broadcast station. The proposed rule stated that temporary authorizations will not normally be granted to begin operations prior to the issue date of the regular license. This certainly does not mean that a temporary authorization will not be granted to an applicant for an emergency situation or unforeseen situation for which the use of the requested authorization would be of benefit to the public safety or interest.

SYSTEM LICENSING AND APPLICATION PROCEDURES

16. In reviewing the comments of many respondents, we realized that although an applicant could obtain one or more remote pickup station or system licenses, it was not clear that each station or system would be licensed for the use of a single group of frequencies as designated in § 74.402. It would be difficult for frequency management purposes to issue a single license that covered several stations operating in widely differing segments of the frequency spectrum. To clarify this procedure, the first sentence

in paragraph (c) of § 74.432 is being modified to read "Remote pickup broadcast stations and systems will be licensed for use of a specific frequency group as designated in § 74.402 as follows:."

17. The changes in procedures for licensing a group remote pickup stations under a single system license will require that application FCC Form 313, renewal application FCC Form 313-R, and the license certificate FCC Form 356 be revised to accommodate multiple transmitter listings. Until such time as the revised application forms are available, applicants should submit attachments listing the transmitting equipment that is to be licensed as a system. Renewal applications should also list the units that are now individually licensed that are to be combined under a single system license.

18. NAB has questioned the requirement that a vertical plan sketch be submitted with certain requests for special temporary authority to operate remote pickup stations with antennas that extend more than 20 feet above any natural formation or man-made structure on which they may be mounted. NAB contends that this requirement could, in the instances of a complex antenna or tower system place an undue burden upon the applicant. The purpose of this requirement is to facilitate a more rapid determination on whether or not the antenna may be a hazard to air navigation or if obstruction marking or lighting may be required. A vertical plan sketch will frequently clarify the written description of the antenna installation. The sketch does not need to be a detailed engineering scale drawing. We therefore believe that the change requested by NAB should not be made.

19. Atlantic is concerned that all program material transmitted by a remote pickup broadcast station must be used by the associated broadcast station. Atlantic states that it participates in presenting helicopter traffic report broadcasts in the Philadelphia area that are carried by several local stations. The remote pickup facilities used are licensed to one of the broadcast stations using the reports; however, not every helicopter reports is used by all the participating broadcast stations, including the licensee of the remote pickup station. The proposed rule would have prohibited the use of remote pickup facilities licensed to network owned stations for use in programming unless it was actually carried by the associated broadcast station. The purpose of the Commission's proposed restriction was to prevent broadcasters from monopolizing remote pickup frequencies by leasing their facilities to other stations, for independent program production activities, or for originating programs intended for the exclusive use of others. Although keeping this purpose in mind, a limited change in the rule is being made so that it would not be necessary for all of the program transmissions of the remote pickup station to be transmitted by the licensee's broadcast station.

20. NBC, Atlantic, and NAB find objection to the restricitons on the sharing with other stations the programming from remote pickup stations. As proposed, other broadcast stations could also use, with permisison, remote pickup transmissions, but only if the other users were in the same operating area as the originating licensee. NBC is particularly concerned that this would appear to prohibit the network distribution of any program material received via a remote pickup station. The proposed rule would also appear to prevent a local station covering a major news event by remote pickup equipment from providing the same coverage to distant stations. We believe that NBC's point is well taken, and are removing the words "in the area." from the amended rule.

21. NBC also objects to the proposed requirement that prior Commission authorization is required for out-of-area operations, particularly if there are no stations using the frequencies where the remote pickup stations are to be operated. Sinclair, on the other hand, is concerned that a network may come into a local area with large quantities of remote pickup equipment and disrupt the regular use of the frequencies by local broadcast stations. We believe that prior authorization from the Commission may not actually provide the protection from interference Sinclair is requesting nor, as NBC points out, any useful purpose when the operation will be in an isolated area. We are therefore modifying the proposed rules so that prior Commission authorization or notification will not be required when licensees wish to use their remote pickup stations outside of their home area, but they may do so on a non-interference basis of the primary use of frequencies by broadcasters operating in their "home" area. Further, we are deleting the requirement that notices be sent to the Engineer in Charge of the radio district in which out-of-area operation will occur. It will be the "visiting" broadcaster's responsibility to coordinate the use of frequencies if necessary. These changes will relieve both the licensee and the Commission staff of the burden of filing and processing out-of-area authorization requests and notifications. Licensees are cautioned to remember that there are certain areas of the United States where the frequencies 166.25 and 170.15 may not be used by Remote Pickup Stations, and therefore must avoid using their mobile equipment on those frequencies in the restricted areas.

Low Power Auxiliary Broadcast Stations

22. Vega believes that there may be some confusion between §§ 74.435(d) and 74.431(a) in reference to the permissible operating location of Remote Pickup stations and low power auxiliary stations. Vega tells us we have, in essence, combined rules for two classes of auxiliary broadcast services in Subpart D that results in confusion and possible conflict. To assist in clarification of the rules we will retitle Subpart D as "Remote Pickup and Low Power Auxiliary Broadcast Stations," and that we are making numerous editorial changes in the text to clearly distinguish between the two types of operation. Section 74.431 will not apply to the low power auxiliary transmitters, and will be retitled "Special rules applicable to remote pickup stations." Vega's concern that the authorized bandwidth restrictions in § 74.462 will apply to all low power auxiliary stations used as wireless microphones is without basis, since the requirements of paragraph (g) in § 74.435 prevail.

Operating Logs and Records

23. Nearly all of the broadcast station licensees responding to the notice in this proceeding questioned the need for requiring that operating logs be kept with detailed entries for each transmission or use of remote pickup stations. The required entries have served no useful purpose to the licensees, or to the Commission in carrying out its regulatory responsibilities. The Commission's Field Operations Bureau staff also indicates that these logs have not been useful in resolving interference problems or in connection with any of its other field activities. Log requirements for the routine communications operations of stations in the land mobile services were deleted several years ago without any significant problems. Since the operation of remote pickup station equipment is very similar to the operation of stations in the land mobile services, we are therefore deleting the requirements for the logging of routine operations of these stations. The Commission may, in the case of a particular problem or need, require licensees to maintain a log or record of the station operations for a specified period of time.

Antenna Installations

24. Several respondents indicated that there may have been an error or unintended requirement in the proposed paragraph (h) of § 74.432 which would require prior authority to erect a temporary antenna which requires notification to the FAA or which will be in existence for more than ten days. The rule, if adopted as written, would have required all antennas used with mobile or portable stations at the some location even if the unit was within a building at basement level. We clearly intended that the word "and" be used in lieu of the word "or" but that notification should be required for antennas of potential hazard to air navigation will be installed for a period of more than two days. This will conform to the requirements of § 74.631(a), Television Auxiliary Stations. Commission experience indicates that there are very few instances where remote pickup station mobile or portable antennas will require FAA notification.

Type Acceptance Requirements

25. WHME doubts that enough type-accepted equipment will be available to meet the needs of Part 74 requirements in an economical manner within one year. Sinclair and WHME both suggest that we permit remote pickup stations to

use transmitting equipment that has been type-accepted for use in the land mobile services and that would also meet the technical specifications of Part 74. The Office of the Chief Engineer concurs with this procedure since it would make available for auxiliary broadcast use a large variety of equipment presently type accepted, and also relieve the manufacturers and Commission of the work of preparing and processing additional applications for type acceptance listings for Part 74 stations. Manufacturers may, however, submit requests for type-acceptance listings for stations licensed under Part 74 of the rules in accordance with the procedures given in Part 2 of the rules.

OPERATING POWER LIMITATIONS

26. Cullum believes that the 15 watt output power limitation for remote pick-up stations operated on board aircraft may, in some circumstances, prevent satisfactory operations. Mountain also discusses this issue by stating that while in many cases only a few watts of power are necessary for transmissions from aircraft, there are special operating conditions where more than 15 watts may be required. Cullum states that as an aircraft banks or turns, the effectiveness of the antenna mounted on an aircraft changes, and that in some circumstances even 35 watts is not adequate to provide reliable transmissions for broadcast. Generally, line-of-sight communications between aircraft and ground locations can be achieved with well under 15 watts using adequate antenna installations. We therefore do not believe it is necessary to set the limitation at a higher level for routine operations, since we are concerned about the potential interference that airborne transmitters can cause over large areas. On the other hand, we believe that authorizations for use of higher powered transmitters could be granted upon an adequate showing of need and of the steps that will be taken to avoid harmful interference to stations in surrounding communities, or in other radio services.

OUTPUT POWER LIMITATIONS

27. WBEN believes that the Commission failed to consider the possible uses of hand carried remote pickup transmitters that will be used in association with a mobile relay station. WBEN states that the proposed limitation on output power of one watt for hand carried units that will be relayed is too low to provide adequate service from within large buildings or sites of large areas where remote programming may originate. WBEN requests that we increase the permissible output power of these units to four watts, and that the mobile repeater station be equipped with the same automatic monitoring controls that are required for fixed repeater stations. WBEN suggests that the Commission recognized the need for using hand carried transmitters with higher output by specifying the output level as one watt rather than the input power as one watt maximum of the existing rules. Although the proposed rule would have effectively doubled the permissible output power for these stations, this was not the reason the change was proposed. It is much easier and more practical, from a technical standpoint, to measure the output power rather than input power. Other respondents in this proceeding did not request an increase in power, however, we do note that stations licensed in the public safety and other land mobile radio services permit mobile relay units to be used with hand carried transmitters with output power up to 2.5 watts. Since this power is the acceptable standard for such use, commercial equipment is being marketed according to this standard, and we have no data indicating that higher power is required, we are increasing the 1 watt limit to 2.5 watts. We do not believe that it would be practical or necessary to require that mobile stations used as repeaters for hand carried units be equipped with the same automatic monitoring controls as fixed repeater installations as suggested by WBEN. We do not prohibit the use of mobile stations when under manual operator control from relaying the transmission of other remote pickup stations to meet the requirements of the licensee.

OTHER REQUESTED CHANGES IN THE PROPOSED RULES

28. Marti, Mountain, NAB, Sinclair, Wheatstone, and WHME, among others, submitted various comments or suggestions for special designations on the use of specific frequencies, adjustments in the authorized bandwidths, or other technical and administrative matters. For example, Marti requests that we restrict the five 161 MHz band frequencies to the transmission of program material, and that the use of these frequencies and those of Group N not be permitted for airborne stations. Mountain requests that we permit the transmission of teleprinter signals using Frequency Shift Keying or Audio Frequency Shift Keying (F1, or F2 emissions) between a station and a place of remote programming for providing wire service news copy, program schedules, commercial copy, etc. Sinclair believes that transmitting antennas should not be permitted to exceed 200 feet in height. NAB suggests we increase the transmitter output power limit for certain required measurements from 3 to 5 watts. These various suggestions, except for the preservation of two 100 kHz channels for wideband high fidelity programming, were not supported with sufficient operating data to warrant the changes requested at this time. We believe that the greatest degree of flexibility in the use of facilities should be permitted. If broadcasters find that operating problems and interference can only be resolved by further designating frequencies for specific uses or in other station specifications, consideration of these matters can be given at a later date.

29. We conclude that, for the reasons set forth above, adoption of these amendments will serve the public interest. Accordingly, *it is ordered*, That effective August 31, 1976, Subpart D, Part 74 of the Commission's rules and regulations is amended as set forth below pursuant to the authority contained in sections 4(i), 303(a), (b), (g), (q) and (r) and 307(b) of the Communications Act of 1934, as amended.

30. *It is further ordered*, That this proceeding is terminated.

Adopted: June 29, 1976.

Released: July 12, 1976.

(Secs. 4, 303, 307, 48 Stat., as amended, 1066, 1082, 1083; 47 U.S.C. 154, 303, 307.)

FEDERAL COMMUNICATIONS COMMISSION,
VINCENT J. MULLINS,
Secretary.

1. Section 74.15(b) is amended to read as follows:

§ 74.15 License period.

* * * * *

(b) Licenses for stations or systems in the Auxiliary Broadcast Service held by a licensee of a broadcast station will be issued for a period running concurrently with the license of the associated broadcast station with which it is licensed. Licenses held by eligible networks for the purpose of providing program services to affiliated stations will be issued for a period running concurrently with the normal licensing period for broadcast stations located in the same area of operation.

* * * * *

2. Part 74, Subpart D—Remote Pick-up Broadcast Stations, is amended in its entirety and, as amended, will read as follows:

Subpart D—Remote Pickup and Low Power Auxiliary Broadcast Stations

DEFINITIONS AND ALLOCATION OF FREQUENCIES

Sec.
74.401 Definitions.
74.402 Frequent assignment.
74.403 Frequency selection to avoid interference.
74.404 Use of FCC Form 425.
74.405 Special provisions relating to Land Mobile Spectrum Management in Chicago region.

ADMINISTRATIVE PROCEDURE

74.411 Cross reference.

LICENSING POLICIES AND GENERAL OPERATING REQUIREMENTS

74.431 Special rules applicable to remote pickup stations.
74.432 Licensing requirements and procedures.
74.433 Temporary authorizations.
74.434 Remote control operation.
74.435 Special rules relating to low power broadcast auxiliary stations.
74.436 Special requirements for automatic relay stations.

EQUIPMENT

74.451 Type acceptance of equipment.
74.452 Equipment changes.

TECHNICAL OPERATION AND OPERATORS

74.461 Transmitter power.
74.462 Authorized bandwidth and emissions.

Sec.
74.463 Modulation requirements.
74.464 Frequency tolerance.
74.465 Frequency monitors and measurements.
74.466 Station inspections.
74.467 Posting of licenses.
74.468 Operator requirements.
74.469 Painting and lighting of antenna structures.
74.470 Additional orders.

OTHER OPERATING REQUIREMENTS

74.481 Logs and records.
74.482 Station identification.

AUTHORITY: Secs. 4, 303, 307, 48 Stat., as amended, 1066, 1082, 1083; 47 U.S.C. 154, 303, 307.

Subpart D—Remote Pickup and Low Power Auxiliary Broadcast Stations

DEFINITIONS AND ALLOCATION OF FREQUENCIES

§ 74.401 Definitions.

Associated broadcasting station(s). The broadcasting station or stations with which a remote pickup broadcast station or system is licensed as an auxiliary and with which it is principally used.

Authorized bandwidth. The occupied or necessary bandwidth, whichever is greater, authorized to be used by a station.

Automatic relay station. A remote pickup broadcast base station which is actuated by automatic means and is used to relay transmissions between remote pickup broadcast base and mobile stations, between remote pickup broadcast mobile stations and from remote pickup broadcast mobile stations to broadcasting stations. (Automatic operation is not operation by remote control.)

Carrier power. The average power at the output terminals of a transmitter (other than a transmitter having a suppressed, reduced or controlled carrier) during one radio frequency cycle under conditions of no modulation.

Low power broadcast auxiliary station. An aural auxiliary broadcast station authorized and operated pursuant to the special provisions set forth in § 74.435 of this Subpart.

Mean power. The power at the output terminals of a transmitter during normal operation, averaged over a time sufficiently long compared with the period of the lowest frequency encountered in the modulation. A time of 1/10 second during which the mean power is greatest will be selected normally.

Necessary bandwidth. For a given class of emission, the minimum value of the occupied bandwidth sufficient to ensure the transmission of information at the rate and with the quality required for the system employed, under specified conditions. Emissions useful for the good functioning of the receiving equipment, as for example, the emission corresponding to the carrier of reduced carrier systems, shall be included in the necessary bandwidth.

Network entity. An organization which produces programs available for simultaneous transmission by 10 or more affiliated stations, and having distribution facilities or circuits available to such affiliated stations in service at least 12 hours each day.

Occupied bandwidth. The frequency bandwidth such that, below its lower and above its upper frequency limits, the mean powers radiated are each equal to 0.5 percent of the total mean power radiated by a given emission.

Operational communications. Communications concerning the technical and programming operation of a broadcast station and its auxiliaries.

Remote control operation. Operation of a base station by a properly designated person on duty at a control position from which the transmitter is not visible but that position is equipped with suitable controls so that essential functions can be performed therefrom.

Remote pickup broadcast base station. A remote pickup broadcast station authorized for operation at a specified location.

Remote pickup broadcast mobile station. A remote pickup broadcast station authorized for use while in motion or during halts at unspecified locations. (As used in this Subpart, mobile stations include hand-carried, pack-carried and other portable transmitters.)

Remote pickup broadcast stations. A term used in this Subpart to include both remote pickup broadcast base stations and remote pickup broadcast mobile stations.

Station. As used in this Subpart, each remote pickup broadcast transmitter, and its associated accessory equipment necessary to the radio communication function, constitutes a separate station.

Studio. Any room or series of rooms equipped for the regular production of broadcast programs of various kinds. A broadcasting booth at a stadium, convention hall, church, or other similar place is not considered to be a studio.

System. A complete remote pickup broadcast facility consisting of one or more mobile stations and/or one or more base stations authorized pursuant to a single license.

§ 74.402 Frequency assignment.

(a) The following frequencies may be assigned for use by remote pickup broadcast stations:

(1) *Group A* (kHz): 1606,[1] 1622, 1646.

(2) *Group D* (MHz): 25.87,[2] 26.15, 26.25, 26.35.

Group E (MHz): 25.91,[2] 26.17, 26.27, 26.37.

Group F (MHz): 25.95; [2] 26.19; 26.29; 26.39.

Group G (MHz): 25.99; [2] 26.21; 26.31; 26.41.

Group H (MHz): 26.03; [2] 26.23; 26.33; 26.43.

(3) *Group I* (MHz): 26.07; [2] 26.11; 26.45.

Group J (MHz): 26.09; [2] 26.13; 26.47.

(4) *Group K_1*[3] (MHz): 152.87[3], 152.93[3], 152.99[3], 153.05[3], 153.11[3], 153.17[3], 153.23[3], 153.29[3], 153.35[3].

Group K_2[3] (MHz): 161.64[6]; 161.67[5]; 161.70[6]; 161.73[6]; 161.76[6].

(5) *Group L* (MHz); 166.25[4].

Group M (MHz); 170.15[4].

(6) *Group N_1* (MHz); 450.050; 450.150; 450.250; 450.350; 450.450; 450.550; 455.050; 455.150; 455.250; 455.350; 455.450; 455.550.

Group N_2 (MHz); 450.0875; 450.1125; 450.1875; 450.2125; 450.2875; 450.3125; 450.3875; 450.4125; 450.4875; 450.5125; 450.5875; 450.6125; 455.0875; 455.1125; 455.1875; 455.2125; 455.2875; 455.3125; 455.3875; 455.4125; 455.4875; 455.5125; 455.5875; 455.6125.

(7) *Group P* (MHz); 450.01[6]; 450.03[6]; 450.98[6]; 450.99[6]; 455.01[6]; 455.02[6]; 455.98[6]; 455.99[6].

(8) *Group R* (MHz): 450.650,[7] 450.700,[7] 450.750,[7] 450.800,[7] 450.850,[7] 455.650,[7] 455.700,[7] 455.750,[7] 455.800,[7] 455.850.[7]

Group S (MHz): 450.925,[7] 455.925.[7]

(9) *Group T* (MHz): 947[9]–952 MHz.

(b) The following frequencies are allocated for assignment to remote pickup broadcast stations in Puerto Rico and the Virgin Islands only:

160.89 MHz, 160.95 MHz, 160.01 MHz, 161.07 MHz, 161.13 MHz, 161.19 MHz, 161.25 MHz, 161.31 MHz, 161.37 MHz.

NOTE.—These frequencies are shared with the Land Transportation Radio Service.

(c) More than one frequency within a group may be assigned for use by each system. The frequencies which will be assigned to any one licensee for use in a single area, however, shall be limited to the extent that: frequencies will not be assigned from more than one group in Groups D through H; frequencies will be assigned from either Group L or M, but not both. This limitation does not

[1] Subject to the condition that no harmful interference is caused to the reception of standard broadcasting stations.

[2] Subject to the condition that no harmful interference is caused to stations in the broadcasting service.

[3] Subject to the condition that no harmful interference is caused to stations operating in accordance with the Table of Frequency Allocations set forth in Part 2 of the Commission's Rules and Regulations. Applications for licenses to use frequencies in this group must include statements showing what procedures will be taken to insure that interference will not be caused to stations in the industrial radio services.

[4] Operation on the frequencies 166.25 MHz and 170.15 MHz is not authorized (i) within the area bounded on the west by the Mississippi River, on the north by the parallel of latitude 37°30′ N., and on the east and south by the arc of the circle with center at Springfield, Ill., and radius equal to the airline distance between Springfield, Ill., and Montgomery, Alabama, subtended between the foregoing west and north boundaries; (ii) within 150 miles of New York City; and (iii) in Alaska or outside the continental United States; and is subject to the condition that no harmful interference is caused to government radio stations in the band 162–174 MHz.

[5] These frequencies may not be used by remote pickup stations in Puerto Rico or the Virgin Islands. In other areas, certain existing stations in the Public Safety and Land Transportation Radio Services have been permitted to continue operation on these frequencies on condition that no harmful interference is caused to remote pickup broadcast stations.

[6] The use of these frequencies is limited to operational communications, including tone and signalling transmissions.

[7] The use of these frequencies is limited to the transmission of program material and cues and orders immediately necessary thereto.

[8] Frequencies in Groups K_1 and K_2 will not be licensed to network entities. Frequencies in Group K_1 will not be authorized to new stations for use on board aircraft.

[9] The use of this frequency band is limited to low power auxiliary broadcast stations.

preclude assignment of additional frequencies from Groups A, K_1, K_2 N_1, N_2, P, R, or S. Applications shall request assignment of only those frequencies necessary for satisfactory operation. A licensee may operate a remote pickup broadcast system only if the system is equipped to operate on all such specified frequencies.

(d) Remote pickup broadcast stations or systems will not be granted exclusive frequency assignment; the same frequency or frequencies may be assigned to other licensees in the same area. Applicants for licenses should select the frequencies closest to the lower band edges within a group that will meet their requirements to promote the orderly and efficient use of the allocated frequencies.

NOTE.—Stations currently assigned to use 450.95 and 455.95 MHz must comply with the frequency assignment allocation specified in paragraph (a) by August 31, 1978. A notification shall be sent to the Commission in Washington, D.C. reporting the beginning of use of frequencies the licensee substitutes for those that must be vacated.

§ 74.403 Frequency selection to avoid interference.

(a) Where two or more remote pickup broadcast station licensees are authorized to operate on the same frequency or group of frequencies in the same area and when simultaneous operation is contemplated, the licensees shall endeavor to select frequencies or schedule operation in such manner as to avoid mutual interference. If mutual agreement to this effect cannot be reached the Commission shall be notified and it will specify the frequency or frequencies on which each station is to be operated.

(b) The following order of priority of transmissions shall be observed on all frequencies except those listed in §74.402 (a)(3), (a)(7) and (a)(8):

(1) Communications during an emergency or pending emergency directly related to the safety of life and property.

(2) Program material to be broadcast.

(3) Cues, orders, and other related communications immediately necessary to the accomplishment of a broadcast.

(4) Operational communications.

(5) Tests or drills to check the performance of stand-by or emergency circuits.

§ 74.404 Use of FCC Form 425.

(a) Applicants proposing to operate on the frequencies specified in paragraph (c) of this section and who propose to operate in the Chicago, Illinois, Regional Area defined in paragraph (d) of this section, shall make application on FCC Form 425 in lieu of FCC Form 313. Form 425 shall be used to apply for new facilities or to apply for modification, renewal or assignment of existing authorizations.

(b) Applications on FCC Form 425 shall be submitted to the Commission's Chicago Regional Office at 1550 Northwest Highway, Park Ridge, Illinois 60068.

(c) FCC Form 425 must be used to file for the following frequencies in the Chicago Regional Area:

Group D (MHz): 26.15, 26.25, 26.35.
Group E (MHz): 26.17, 26.27, 26.37.
Group F (MHz): 26.19, 26.29, 26.39.
Group G (MHz): 26.21, 26.31, 26.41.
Group H (MHz): 26.23, 26.33, 26.43.
Group I (MHz): 26.11, 26.45.
Group J (MHz): 26.13, 26.47.
Group K_1 (MHz): 152.87, 152.93, 152.99, 153.05, 153.11, 153.17, 153.23, 153.29, 153.35.

(d) The Chicago, Illinois, Region is defined to consist of the counties listed below:

ILLINOIS

1. Boone
2. Bureau
3. Carroll
4. Champaign
5. Christian
6. Clark
7. Coles
8. Cook
9. Cumberland
10. De Kalb
11. De Witt
12. Douglas
13. Du Page
14. Edgar
15. Ford
16. Fulton
17. Grundy
18. Henry
19. Iroquois
20. Jo Daviess
21. Kane
22. Kankakee
23. Kendall
24. Knox
25. Lake
26. La Salle
27. Lee
28. Livingston
29. Logan
30. Macon
31. Marshall
32. Mason
33. McHenry
34. McLean
35. Menard
36. Mercer
37. Moultrie
38. Ogle
39. Peoria
40. Piatt
41. Putnam
42. Rock Island
43. Sangamon
44. Shelby
45. Stark
46. Stephenson
47. Tazewell
48. Vermilion
49. Warren
50. Whiteside
51. Will
52. Winnebago
53. Woodford

INDIANA

1. Adams
2. Allen
3. Benton
4. Blackford
5. Boone
6. Carroll
7. Cass
8. Clay
9. Clinton
10. De Kalb
11. Delaware
12. Elkhart
13. Fountain
14. Fulton
15. Grant
16. Hamilton
17. Hancock
18. Hendricks
19. Henry
20. Howard
21. Huntington
22. Jasper
23. Jay
24. Kosciusko
25. Lake
26. LaGrange
27. La Porte
28. Madison
29. Marion
30. Marshall
31. Miami
32. Montgomery
33. Morgan
34. Newton
35. Noble
36. Owen
37. Parke
38. Porter
39. Pulaski
40. Putnam
41. Randolph
42. St. Joseph
43. Starke
44. Steuben
45. Tippecanoe
46. Tipton
47. Vermilion
48. Vigo
49. Wabash
50. Warren
51. Wells
52. White
53. Whitley

IOWA

1. Cedar
2. Clinton
3. Dubuque
4. Jackson
5. Jones
6. Muscatine
7. Scott

MICHIGAN

1. Allegan
2. Barry
3. Berrien
4. Branch
5. Calhoun
6. Cass
7. Clinton
8. Eaton
9. Hillsdale
10. Ingham
11. Ionia
12. Jackson
13. Kalamazoo
14. Kent
15. Lake
16. Mason
17. Mecosta
18. Montcalm
19. Muskegon
20. Newaygo
21. Oceana
22. Ottawa
23. St. Joseph
24. Van Buren

OHIO

1. Defiance
2. Mercer
3. Paulding
4. Van Wert
5. Williams

WISCONSIN

1. Adams
2. Brown
3. Calumet
4. Columbia
5. Dane
6. Dodge
7. Door
8. Fond du Lac
9. Grant
10. Green
11. Green Lake
12. Iowa
13. Jefferson
14. Juneau
15. Kenosha
16. Kewaunee
17. Lafayette
18. Manitowoc
19. Marquette
20. Milwaukee
21. Outagamie
22. Ozaukee
23. Racine
24. Richland
25. Rock
26. Sauk
27. Sheboygan
28. Walworth
29. Washington
30. Waukesha
31. Waupaca
32. Waushara
33. Winnebago

§ 74.405 Special provisions relating to Land Mobile Spectrum Management Program in Chicago region.

(a) The licensing policies, general operating requirements, equipment, technical, and other operating requirements of this Subpart will govern for all licensees and applicants for Remote Pickup Broadcast Stations who must file on FCC Form 425 in the Chicago region. Limitations for the service in which licensee eligibility is established will govern the use of a station even though the frequency assigned may not be from the service in which eligibility was established; except in the case of automatic relay stations which will only be permitted on frequencies previously available for automatic relay use.

(b) The Table below reflects the basic frequency assignment methodology for use in the Chicago region. Category I consists of the police and fire radio service and their present frequencies. Category II consists of other radio services and their frequencies:

CATEGORY I

Police radio service.
Fire radio.

CATEGORY II

GROUP A

Forestry-conservation radio service.
Highway maintenance radio service.
Local government radio service.
Special emergency radio service.

GROUP B

Power radio service.
Telephone maintenance radio service.
Railroad radio service.

GROUP C

Petroleum radio service.
Forest products radio service.
Manufacturers radio service.
Special industrial radio service.
Motor carrier radio service.
Automobile emergency radio service.
Business radio service.
Taxicab radio service.
Motion picture radio service.
Relay press radio service.
Remote pickup broadcast stations.

GROUP D

Domestic public land mobile radio service.[2]

[2] These frequencies will not be shared with private systems in the Chicago region at this time.

GROUP E

Citizens radio service (Class A).

(c) Frequencies in Category I are available only to those who establish eligibility in that category. Frequencies in Category II are available to persons who establish eligibility in Category II; and are also available to Category I eligibles on a secondary basis.

(d) To the extent practicable, frequencies from the service within which an applicant has established eligibility will be assigned to that applicant. If no suitable frequency is available, then a search will be made of frequencies of other services in the same group as the applicant. Access to the frequencies of a different group will be permitted only on a case-by-case basis and only when no suitable frequency is available in the group in which eligibility is established.

(e) Where services which presently share frequencies are in different categories or groups, the shared frequencies will only be available to the lower priority category or group.

(f) The Chicago Land Mobile Spectrum Management District consists of the following counties in the States noted:

ILLINOIS

1. Boone	11. Kendall
2. Bureau	12. Lake
3. Cook	13. La Salle
4. DeKalb	14. Lee
5. DuPage	15. Livingston
6. Ford	16. McHenry
7. Grundy	17. Ogle
8. Iroquois	18. Putnam
9. Kane	19. Will
10. Kankakee	20. Winnebago

INDIANA

1. Benton	9. LaPorte
2. Carroll	10. Marshall
3. Cass	11. Newton
4. Elkhart	12. Porter
5. Fulton	13. Pulaski
6. Jasper	14. St. Joseph
7. Kosciusko	15. Starke
8. Lake	16. White

MICHIGAN

1. Allegan	3. Cass
2. Berrien	4. Van Buren

WISCONSIN

1. Jefferson	5. Rock
2. Kenosha	6. Walworth
3. Milwaukee	7. Waukesha
4. Racine	

ADMINISTRATIVE PROCEDURE

§ 74.411 Cross reference.

See §§ 74.11 to 74.16

LICENSING POLICIES AND GENERAL OPERATING REQUIREMENTS

§ 74.431 Special rules applicable to remote pickup stations.

(a) Remote pickup broadcast mobile stations may be used for the transmission of material from the scene of events which occur outside a studio and for the transmission of cues and orders and other related communications which are necessary to accomplish the broadcast. The program material transmitted by the remote pickup mobile station shall be intended or available for use by the licensee's associated broadcast stations or network affiliated stations. The program material may also be transmitted to any other broadcast station. Editing or rearranging of the program material to meet the needs of the broadcast station is not precluded.

(b) A remote pickup broadcast mobile station may communicate with the broadcasting station or stations with which it is operating and with other remote pickup broadcast stations of its licensee. It may also relay the transmissions of other remote pickup broadcast stations of its licensee.

(c) In cases where a remote pickup broadcast mobile station is taken to the scene of an event to be broadcast and the operator-reporter wishes to leave the location of the transmitter in order to move about freely at the scene with a hand-carried or pack-carried transmitter in order to conduct interviews, obtain a better vantage point to view the scene or otherwise more effectively cover the event, the mobile station may be operated as a temporarily unattended automatic relay station subject to the following conditions:

(1) The output power of the hand-carried or pack-carried transmitter shall not exceed 2.5 watts.

(2) The unattended mobile station shall be so equipped that it will be activated by the carrier of the hand-carried or pack-carried transmitter and will transmit only when relaying the transmission of the hand-carried or pack-carried transmitter or when relaying the transmission of an associated base station operating on the same frequency as the hand-carried or pack-carried transmitter and directed to the operator-reporter at the scene of the event.

(3) Unless the operator-reporter is equipped to continuously monitor use of the frequency on which the unattended transmitter operates, while moving about at the scene of the event, he shall make an observation on the frequency before leaving the location of the mobile transmitter to ascertain whether it is in use so as to avoid interference to other users.

(d) A remote pickup broadcast mobile station may be operated in other areas for a period of 30 days or less without prior authority of the Commission: *Provided*, That, no interference is caused to the programming operations of stations licensed in the area of intended operations. It shall be the responsibility of the licensee desiring to operate in other areas to coordinate for the utilization of frequencies with any licensees authorized to use those same frequencies in such other areas.

(e) A remote pickup broadcast base station may be used for the transmission of cues, orders, and instructions to remote pickup broadcast mobile stations in its system for the purpose of dispatching them to the scene where broadcasters may originate and directing their operation on the scene: Cueing may include brief transmissions of program material to the remote pickup broadcast mobile station, if necessary. A remote pickup broadcast base station may also be used to relay transmissions, either directly or via an automatic relay station, to and from remote pickup broadcast mobile stations in its system. Remote pickup broadcast base stations operating pursuant to § 74.432 (c)(2) and (c)(5) may communicate with other remote pickup broadcast base stations.

(f) Remote pickup broadcast base and mobile stations in Alaska, Guam, Hawaii, Puerto Rico and the Virgin Islands may be used for any purpose related to the programming or technical operation of a broadcasting station, except for transmissions intended for direct reception by the general public.

(g) Remote pickup broadcast base and mobile stations may be used for operational communications: *Provided*, That, such use is consistent with the priority requirements of § 74.403(b) and: *Provided further*, Operational communications may not be conducted on frequencies listed in § 74.402(a)(8). Operational communications shall be construed to include the transmission of alerting tones of short duration and special signals used for telemetry or control.

(h) In the event of damage or impairment of the regular communication and program circuits of a broadcasting station due to storms, floods, fires, strikes, equipment failures, or other similar causes, authorized remote pickup broadcast base and mobile stations may be used to provide such temporary circuits as may be needed to continue the broadcasting operation, pending the restoration of the regular circuits for a period not exceeding 30 days without further authority from the Commission.

(i) Remote pickup broadcast base and mobile stations associated with broadcasting stations participating in the Emergency Broadcast System, or a similar emergency survival communication system, may be used: (1) To transmit, for broadcasting station use, warnings, instructions, and information relating to war, threat of war, a state of public peril or disaster, or other national, state, or local emergency constituting a threat to the safety of life or property; (2) for coordination of effort in connection with such broadcasts; and (3) for periodic tests or drills to ascertain the reliability of the circuit. Drills should not be conducted more than once a week and should be completed as quickly as possible. Individual transmitters may be turned on for alignment, adjustment, and repair whenever necessary. The conduct of a test or drill is subject to the condition that no interference will be caused to remote pickup broadcast base or mobile stations engaged in the transmission of program material, the preparation for such transmission, or other authorized operation.

(j) A licensee may operate two or more authorized remote pickup broadcast stations simultaneously on different authorized frequencies.

(k) Remote pickup broadcast base and mobile stations operated by one licensee may communicate with remote pickup

broadcast base and mobile stations operated by another licensee, either directly or via an automatic relay station:

(1) For the purpose of scheduling the use of shared remote pickup broadcast frequencies, in order to minimize potential interference;

(2) When engaged in a pooled remote pickup operation.

(e) Automatic relay stations may be used to relay any authorized transmissions of other remote pickup broadcast stations operating on authorized remote pickup broadcast frequencies, except transmissions of another automatic relay station. Normally such transmissions will originate from remote pickup broadcast stations operated by the licensee of the automatic relay station. However, transmissions of remote pickup broadcast stations operated by other licensees on a frequency occupied by an automatic relay station may be relayed for monitoring purposes to avoid interference which might be caused by actuating the automatic relay station when the frequency on which it would operate is occupied. Operation of the automatic relay station for monitoring observations shall be confined to the brief period necessary to determine whether the monitored frequency is in use.

§ 74.432 Licensing requirements and procedures.

(a) A license for a remote pickup broadcast station will be issued only to the licensee of an AM, FM, noncommercial FM, television, or international broadcast station, or to an eligible network entity. To be eligible, a network entity must provide a program service for simultaneous transmission by 10 or more stations through circuit facilities available for program distribution to each affiliated station at least 12 hours of each day.

(b) A broadcasting station licensee is not limited with respect to the number of remote pickup broadcast stations or systems which may be licensed for operation in a single area.

(c) Remote pickup broadcast stations and systems will be licensed for use of a specified frequency group as designated in § 74.402 as follows:

(1) Base stations may be licensed as automatic relay stations and, as such, will be separately licensed. An automatic relay station will be licensed to operate only on frequencies listed in § 74.402(a) 6, 7 and 8. Each automatic relay station shall be operated in accordance with the provisions of § 74.436. A licensee may be authorized to operate more than one automatic relay station; however, no more than two frequencies will be assigned a licensee for use by such stations in any single area. Automatic relay stations operating on a frequency listed in § 74.402 (a) (6) shall operate in accordance with the priorities prescribed in § 74.403(b).

(2) Base stations may be authorized to provide one-way or two-way voice communications between the studio and transmitter of a broadcasting station, the licensee of which is also licensee of an aural or television broadcast STL station used for program transmission between the same two points, or to provide such voice communications between the point of origin and the determination of an aural or television intercity relay system. A single station or paired stations operated for these purposes will be licensed as a system and a single license will be issued for each such system. Automatic relay stations will not be authorized for use with these systems. Operation of these systems shall be limited to the frequencies listed in frequency Groups I and J of § 74.402(a).

(3) Remote pickup broadcast mobile stations and the principal base station or base stations with which they communicate, excluding automatic relay stations, will be licensed as a system and a single license will be issued for each such system. Any of the frequencies listed in § 74.402, as available to the location, may be assigned for use by stations in these systems.

(4) In the event a broadcasting station licensee wishes to operate one or more remote pickup broadcast mobile stations only, such station or stations will be licensed as a system and a single license will be issued for each such system. Any of the frequencies listed in § 74.402, as available to the location, may be assigned for use by stations in these systems.

(5) Base stations may be authorized to provide standby program circuits from places where official broadcasts may be made during a war, threat of war, or state of public peril or disaster or other national, state, or local emergency constituting a threat to the safety of life or property; and circuits to interconnect broadcasting stations participating in the Emergency Broadcast System or a similar emergency survival communication system. Each such station will be licensed separately. An applicant may request the assignment of any of the frequencies listed in § 74.402 as available to the location for these purposes.

(6) In Alaska, Guam, Hawaii, Puerto Rico, or the Virgin Islands, base stations may be licensed to provide program circuits between the studio and transmitter or to relay programs between broadcasting stations. Except in emergencies, such uses are not permitted within the 48 contiguous United States or the District of Columbia. Each station licensed for these purposes shall be licensed separately. Any of the frequencies listed in § 74.402 as available in the above places may be requested by an applicant. A base station operated pursuant to this subparagraph may be operated unattended: *Provided,* Such operation is conducted in accordance with the following:

(i) In the case where the station retransmits another station's signals received directly "off-the-air," the transmitter shall be equipped with automatic circuits that will cause it to cease radiating within 1 minute at times when no signal is being received from the station which it is relaying.

(ii) The transmitter shall be provided with adequate safeguards to prevent improper operation of the equipment.

(iii) The transmitter installation shall be adequately protected against tampering by unauthorized persons.

(iv) Whenever an unattended station is in operation, a person designated by and under control of the licensee shall be on duty at the receiving end of the circuit. The designated person need not be a licensed operator under Part 13 (Commercial Radio Operators) of the Commission's rules. The designated person on duty at the receiving end of the circuit shall observe circuit performance and initiate corrective action when required.

(v) It shall be the responsibility of the licensee to insure that any repairs or adjustments that may be necessary are made by a person technically qualified to do so.

(d) Remote pickup system licenses will specify the minimum and maximum number of mobile units that may be operated within that system as follows:

from 1 to 5 stations
from 4 to 12 stations
from 10 to 24 stations
from 20 to 50 stations
45 or more stations.

Licensees shall have installed and maintain in operating condition the minimum number of mobile units authorized within 120 days following the grant date of the license.

(e) The Commission will assign a separate call sign for each station or system separately licensed. The licensee of a remote pickup broadcast system shall assign an individual unit designator to each station in the system.

(f) An application for a new or renewal remote pickup station license shall specify the frequency or frequencies desired. Only those frequencies necessary for satisfactory operation shall be requested.

(g) An application for a remote pickup broadcast station or system shall specify the broadcasting station or stations (where more than one broadcasting station is specified, all such broadcasting stations shall be licensed to the applicant and to the same community) with which the remote pickup broadcast facility is to be principally used and the licensed area of operation for a system which includes mobile stations shall be the area considered to be served by the associated broadcasting station or stations. Mobile stations may be operated outside the licensed area of operation pursuant to § 74.431(d). Where the applicant for remote pickup broadcast facilities is the licensee of more than one class of broadcasting station (standard, FM, TV), all licensed to the same community, designation of one or more such stations as the associated broadcasting station or stations will not preclude use of the remote pickup broadcast facilities with those broadcasting stations not included in the designation and such additional use shall be at the discretion of the licensee.

(h) Each remote pickup broadcast station operated by a licensee shall be made available for inspection upon request by any authorized representative of the Commission. In cases where a series of

broadcasts are to be made from the same location, portable or mobile transmitters may be left at such location for the duration of the series of broadcasts: *Provided*, The transmitting apparatus is properly secured so that it may not be operated by unauthorized persons when unattended. Prior Commission authority shall be obtained for the installation of any transmitting antenna which requires notification to the FAA, pursuant to § 17.7 of the Commission's rules and regulations, and which will be in existence for more than 2 days.

(i) The location of each remote pickup broadcast base station will be specified in the station or system license and such stations may not be operated at any other location without prior authority of the Commission.

(j) A remote pickup broadcast station or system may be authorized solely for operational communications provided such operation is confined to the frequencies listed in § 74.402(a)(7).

(k) In case of permanent discontinuance of operation of a station or system licensed under this Subpart, the licensee shall forward the station or system license to the issuing authority for cancellation. For purposes of this section, a station which is not operated for a period of one year, or is incapable of being operated within the time period specified in (§ 74.432(d) is considered to have been permanently discontinued.

(l) Applications for renewal of authority to operate remote pickup broadcast stations filed after August 31, 1976, shall include information which identifies the stations to be included in each system designated by the licensee in each system designated by the licensee in accordance with procedures set forth in this section.

§ 74.433 Temporary authorizations.

(a) Special temporary authority may be granted for: operation of a remote pickup broadcast station licensed to another broadcasting station licensee; operation, as a remote pickup broadcast station, of equipment licensed to another class of station or service, or, operation of equipment of suitable design not heretofore licensed. Such authority will normally be granted only for special operations of a temporary nature.

(b) A request for special temporary authority for the operation of a remote pickup broadcast station may be made by informal application, which shall be filed with the Commission at least 10 days prior to the date of the proposed operation: *Provided*, That, an application filed within less than 10 days of the proposed operation may be accepted upon a satisfactory showing of the reasons for the delay in submitting the request.

(c) An informal request for special temporary authority shall be addressed to the Commission in Washington, D.C., or the Commission's Chicago Regional Office, as appropriate (see § 74.404), and shall set forth full particulars including: licensee's name, call letters of associated broadcasting station or stations, name and address of individual designated to receive return telegram, call letters of remote pickup station if assigned, type and manufacturer of equipment, power output, emission, frequency or frequencies proposed to be used, commencement and termination date and location of proposed operation, and purpose for which request is made including any particular justification. In the event that the proposed antenna installation will increase the height of any natural formation or existing man-made structure by more than 20 feet, a vertical plan sketch showing the height above ground of any existing structure, the elevation of the site above mean sea level, and the geographic coordinates of the proposed site, shall be submitted with the application.

(d) A request for special temporary authority shall specify a frequency or frequencies consistent with the provisions of § 74.402: *Provided*, That, in the case of events of wide-spread interest and importance which cannot be transmitted successfully on these frequencies, frequencies assigned to other services may be requested upon a showing that operation thereon will not cause interference to established stations: *And provided further*, In no case will operation of a remote pickup broadcast station be authorized on frequencies employed for the safety of life and property.

(e) An applicant requesting special temporary authority to operate, as a remote pickup broadcast station, equipment authorized for use by another class of station, shall, if the equipment to be used is not licensed to the applicant, submit a statement to show that temporary control of the transmissions therefrom has been secured for the duration of the special operation proposed.

(f) Special temporary authority to permit operation of remote pickup broadcast stations or systems pending Commission action on an application for regular authority will not normally be granted.

§ 74.434 Remote control operation.

(a) Remote control operation is permitted for remote pickup broadcast base stations only and such operation shall be in accordance with the following conditions:

(1) The transmitter shall be equipped with a device which will automatically prevent modulation in excess of the limits set forth in this Subpart or the control position shall be equipped with a percentage modulation indicator or calibrated program level meter.

(2) The person at the control position designated to operate the transmitter shall have on-and-off control of the transmitter output.

(3) The transmitter shall be inaccessible to other than duly authorized persons.

§ 74.435 Special rules relating to low power broadcast auxiliary stations.

(a) Where requirements set forth in this section differ from those set forth elsewhere in this Subpart, the licensing and operation of low power broadcast auxiliary stations shall conform with requirements of this section.

(b) The devices which will be licensed under this section are those which are normally intended to transmit over distances not in excess of a few hundred feet and will normally fall into two general categories: Cue and control signal transmitters and wireless microphones.

(c) A license authorizing operation of one or more lower power broadcast auxiliary stations will be issued only to the licensee of a standard, commercial FM, noncommercial educational FM, commercial television, noncommercial educational television broadcasting station or to an eligible network entity and low power broadcast auxiliary stations will be licensed for use with a specific broadcasting station or combination of broadcasting stations licensed to the same licensee and to the same community. Licensing of low power broadcast auxiliary stations for use with a specific broadcasting station or combination of such stations does not preclude their use with other broadcasting stations of the same or a different licensee at any location. Such additional use is permitted without further authority of the Commission: *Provided*, However, operation of low power broadcast auxiliary stations shall, at all times, be in accordance with the requirements of paragraph (1) of this section: *And provided further*, A low power broadcast auxiliary station that is being used with a broadcasting station or network other than one with which it is licensed shall, in addition to meeting the requirements in paragraph (i) of this section, not cause harmful interference to another low power broadcast auxiliary station which is being used with the broadcast station(s) or network with which it is licensed.

(d) The license for a low power broadcast auxiliary station authorizes the transmission of cues and orders to production personnel and participants in broadcast programs and in the preparation therefor, the transmission of program material by means of a wireless microphone worn by a performer or other participant in a program during rehearsal and during the actual broadcast, or the transmission of comments, interviews, and reports from the scene of a remote broadcast. Low power auxiliary stations operating in the 947–952 MHz band may, in addition, transmit synchronizing signals and various control signals to portable or hand-carried TV cameras which employ low power radio signals in lieu of cable to deliver picture signals to the control point at the scene of a remote broadcast.

(e) An application for new low power broadcast auxiliary stations or for a change in an existing authorization shall specify the broadcasting station, combination of such stations or network with which the low power broadcast auxiliary facilities are to be principally used, as set forth in paragraph (c) of this section. A single application, filed in duplicate on FCC Form 313 or FCC Form 425, as appropriate, may be used in applying for authority to operate one or more low power broadcast auxiliary units and the application shall specify the number of units to be operated and the frequency bands which will be used.

(f) Low power broadcast auxiliary stations will be authorized to operate in the frequency bands 26.10–26.48 MHz, 161.625–161.775 MHz (except in Puerto Rico or the Virgin Islands), 450–451 MHz, 455–456 MHz and 947–952 MHz. Transmitting units may be operated on any frequency within the band of frequencies for which the station is licensed.

(g) The occupied bandwidth of a low power broadcast auxiliary station shall not be greater than that necessary for satisfactory transmission and, in no event, an emission appearing on any discrete frequency outside the authorized band shall be attenuated, at least, 46+10 $\log_{10}$ (mean output power, in watts) decibels below the mean output power of the transmitting unit.

(h) Low power broadcast auxiliary stations shall be operated so that no harmful interference is caused to any other station operating in accordance with Commission rules and regulations and with the Table of Frequency Allocations in Part 2 thereof.

(i) The maximum transmitter power which will be authorized for low power broadcast auxiliary stations is 1 watt. Licensees may accept the manufacturer's power rating; however, it is the licensee's responsibility to observe specified power limits. Unusual transmitting antennas or antenna elevations shall not be used to deliberately extend the range of such stations beyond the limited areas defined in paragraph (d) of this section.

(j) If a low power broadcast auxiliary station employs amplitude modulation, the transmitting unit shall be equipped so as to automatically limit the instantaneous peak voltage of the radio frequency carrier to a value not exceeding twice the unmodulated carrier peak voltage.

(k) A low power broadcast auxiliary station may be operated only by a person designated by and under the control of the licensee and need not be a licensed operator under Part 13 (Commercial Radio Operators) of the Commission's rules and regulations. Any adjustments or repairs that could affect the proper operation of transmitting units shall be made by or under the immediate supervision of an operator holding a valid first- or second-class radiotelephone license.

(l) Call signs will not be assigned for low power broadcast auxiliary stations. In lieu thereof, an announcement shall be made at the beginning and end of each period of operation at a single location, over the transmitting unit being operated, identifying the transmitting unit designator, its location, and the call sign of the broadcasting station or name of the network with which it is being used. A period of operation may consist of a continuous transmission or intermittent transmissions pertaining to a single event.

(m) Each licensee of low power broadcast auxiliary stations shall maintain an accurate record, which may be kept at the main studio or transmitter of a broadcasting station with which the auxiliary is licensed or at the location where records for remote pickup broadcast facilities are kept, listing the current location of all such low power broadcast auxiliary stations. These records shall be retained for a period of two years.

(n) The license for one or more low power broadcast auxiliary stations shall be posted with the license for any broadcasting station with which the auxiliary is licensed. The licenses held by an eligible network entity shall be kept in the licensee's files at the address shown on the authorization.

§ 74.436 Special requirements for automatic relay stations.

An automatic relay station installation shall, in addition to the relay transmitter, include a monitor receiver, a control unit, and one or more relay receivers.

(a) Monitor receiver: A receiver tuned to the frequency assigned to the automatic relay station and connected to the transmitting antenna used by the automatic relay station shall be in operation at the automatic relay station site at all times when the relay transmitter is capable of being turned on automatically. The monitor receiver shall comply with the following requirements:

(1) The receiver shall be equipped with a "lock-out" control circuit which will prevent the relay transmitter from being turned on automatically whenever a signal other than the signal of the relay transmitter is being received.

(2) The sensitivity of the monitor receiver shall be such that a signal of 2 microvolts or more across the antenna input terminals will actuate the "lock-out" control which prevents the transmitter from being turned on automatically.

(3) The "lock-out" control shall be so designed that if the monitor receiver is inoperative the relay transmitter cannot be turned on automatically.

(b) Control unit: The control unit may be an integral part of the relay receiver or may be a separate unit into which the output of one or more relay receivers is fed. The control unit shall meet the following requirements:

(1) The control unit shall be so designed that it will turn the relay transmitter on only upon receipt of a predetermined coded signal consisting of at least two tones which may be transmitted either simultaneously or sequentially, or a series of at least three dissimilar pulse combinations transmitted sequentially. In lieu of the coded signal, the control unit may be designed so that the transmitter will remain operative only when receiving a continuous single tone superimposed on the material being relayed.

(2) The control unit shall be capable of turning the transmitter off upon receipt of an appropriate signal. The complexity of the signal used to turn off the relay transmitter is left to the discretion of the licensee.

(3) The control unit shall also be designed so that the absence of a signal from the relay receiver either due to cessation of operation of the station being relayed or failure of the relay receiver or control unit, will automatically place the relay transmitter in an inoperative condition. A suitable time-delay factor may be incorporated to prevent actuation of the automatic cut-off due to momentary failures of the incoming signals.

(c) Relay receiver: One or more receivers tuned to frequencies used by the stations which are to be relayed by the automatic relay station, may be installed at the automatic relay station site. The receivers shall be installed so that they will turn the relay transmitter on and off only through the control unit. The choice of receivers and receiving antennas is left to the discretion of the licensee.

(d) The automatic relay station may accomplish the retransmission of the incoming signals by simple heterodyne frequency conversion or by modulating the transmitter with aural signals obtained by demodulation of the incoming signal. If the relay transmitter is to be modulated with aural signals the transmitter or the receiver or both shall be equipped with automatic controls which will prevent overmodulation of the relay transmitter.

(e) The transmitting apparatus and control equipment shall be adequately protected against tampering by unauthorized persons.

(f) An application for authority to construct an automatic relay station shall include a satisfactory showing as to the manner of compliance with the requirements of this section.

EQUIPMENT

§ 74.451 Type acceptance of equipment.

(a) Applications for new remote pickup broadcast stations or systems or for changing equipment which are tendered after (one year following the effective date of these rules) will not be accepted unless the equipment specified therein has been type accepted for use pursuant to provisions of this Subpart, or which has been type-accepted for licensing by stations under Parts 21, 89, 91, or 93 of the rules and which does not exceed the output power.

(b) Any manufacturer of a transmitter to be used in this service may apply for type acceptance for such transmitter following the type acceptance procedure set forth in Part 2 of the Commission's rules and regulations. Attention is also directed to Part 1 of the Commission's rules and regulations which specifies the fees required when filing an application for type acceptance.

(c) An applicant for a remote pickup or low power auxiliary broadcast station or system may also apply for type acceptance for an individual transmitter by following the type acceptance procedure set forth in Part 2 of the Commission's rules and regulations. The application for type acceptance must be accompanied by the proper fees as prescribed in Part 1 of the Commissions' rules and regulations. Individual transmitters which are type accepted will not normally be included in the Commission's "Radio Equipment List."

(d) All transmitters marketed after August 31, 1977 shall be type accepted

by the Federal Communications Commission for use under this Subpart. (Refer to Subpart I of Part 2 of the Commission's rules and regulations.)

(e) Remote pickup and low power auxiliary broadcast station equipment authorized to be used pursuant to an application accepted for filing prior to (one year following the effective date of these rules) may continue to be used by the licensee or its successors or assignees: *Provided, however,* If operation of such equipment causes harmful interference due to its failure to comply with the technical standards set forth in this Subpart, the Commission may, at its discretion, require the licensee to take such corrective action as is necessary to eliminate the interference.

(f) Each instrument of authority which permits operation of a remote pickup broadcast station or system using equipment which has not been type accepted will specify the particular transmitting equipment which the licensee is authorized to use.

§ 74.452 Equipment changes.

(a) Prior Commission approval is required for any change in the overall height of an antenna structure, except where notice to the Federal Aviation Administration is specifically not required under § 17.14(b) of the Commission's rules and regulations.

(b) The licensee of a remote pickup or low power auxiliary broadcast station may, except as set forth in paragraph (d) of this section, make any other changes in the equipment that are deemed desirable or necessary, including replacement with type accepted equipment, without prior Commission approval: *Provided,* The proposed changes will not depart from any of the terms of the station or system authorization or the Commission's technical rules governing this service: *And provided further,* That any changes made to type accepted transmitting equipment shall be in compliance with the provisions of Part 2 of the Commission's rules and regulations concerning modification to type accepted equipment.

(c) Any equipment changes made pursuant to paragraph (b) of this section shall be set forth in the next application for renewal of license.

(d) Prior to August 31, 1977, Commission approval must be obtained before replacing an authorized transmitter with a transmitter which has not been type accepted for use in the remote pickup broadcast service. Transmitters initially installed after August 31, 1977, must be type accepted for use in this service.

TECHNICAL OPERATION AND OPERATORS

§ 74.461 Transmitter power.

(a) Transmitter power is the power at the transmitter output terminals and delivered to the antenna, antenna transmission line, or any other impedance-matched, radio frequency load. For the purpose of this Subpart, the transmitter power is the carrier power.

(b) The authorized transmitter power for a remote pickup broadcast station shall be limited to that necessary for satisfactory service and, in any event, shall not be greater than 100 watts, except that a station to be operated aboard an aircraft shall normally be limited to a maximum authorized power of 15 watts. Specific authorization to operate stations on board aircraft with an output power exceeding 15 watts will be issued only upon an adequate engineering showing of need, and of the procedures that will be taken to avoid harmful interference to other licensees. Authorization to use power exceeding 15 watts will not be authorized for stations using frequencies in Group K_1.

§ 74.462 Authorized bandwidth and emissions.

(a) Each authorization for a new remote pickup broadcast station or system issued pursuant to an application accepted after (one year following the effective date of these rules) shall require the use of type accepted equipment and such equipment shall be operated in accordance with emission specifications included in the type acceptance grant and as prescribed in paragraphs (b), (c), and (d) of this section.

(b) The maximum authorized bandwidth of emissions corresponding to the types of emissions specified below, and the maximum authorized frequency deviation in the case of frequency or phase modulated emission, shall be as follows:

Frequencies (megahertz)	Authorized bandwidth (*Kilohertz*)	Maximum frequency deviation [1] (*Kilohertz*)	Type of emission [2] [3]
25.87 to 26.03	40	10	A3, F3, F9
26.07 to 26.47	20	5	A3, F3, F9
152.89 to 153.35 [4]	30-60	5-10	A3, F3, F9
160.89 to 161.37	60	10	A1, A2, A3, F1, F2, F3, F9
161.64 to 161.75	30	5	A1, A2, A3, F1, F2, F3, F9
166.25 to 170.15	25	5	A1, A2, A3, F1, F2, F3, F9
450.01 to 455.99 (10 kHz channels)	10	1.5	A1, A2, A3, F1, F2, F3, F9
450.0375 to 455.6125 (25 kHz channels)	25	5	A1, A2, A3, F1, F2, F3, F9
450.95 to 455.85 (50 kHz channels)	50	10	A1, A2, A3, F1, F2, F3, F9
450.925 and 455.925 (100 kHz channels)	100	35	A1, A2, A3, F1, F2, F3, F9

[1] Applies where class F1, F2, F3, or F9 emission is used.
[2] Stations operating above 450 MHz shall show a need for employing A1, A2, F1, or F2 emission.
[3] Emission designators shall be established in accordance with provisions of subpt. C of pt. 2 of the Commission's rules and regulations. For transmitting equipment which is type accepted, emission designators will appear in the Commission's radio equipment list.
[4] New or modified licenses for use of the frequencies will not be granted to utilize transmitters on board aircraft, or to use a bandwidth in excess of 30 kHz and maximum deviation exceeding 5 kHz.

(c) The mean power of emissions shall be attenuated below the mean output power of the transmitter in accordance with the following schedule:

(1) On any frequency removed from the assignment frequency by more than 50 percent up to and including 100 percent of the authorized bandwidth: at least 25 decibles:

(2) On any frequency removed from the assigned frequency by more than 100 percent up to and including 250 percent of the authorized bandwidth: at least 35 decibels;

(3) On any frequency removed from the assigned frequency by more than 250 percent of the authorized bandwidth: at least 46 plus 10 $\log_{10}$ (mean output power, in watts) decibels.

(d) In the event a station's emissions outside its authorized channel cause harmful interference, the Commission may, at its discretion, require the licensee to take such further steps as may be necessary to eliminate the interference.

(e) The maximum authorized bandwidth for stations operating on 1606, 1622, or 1646 kHz shall be 10 kHz and operations on these frequencies shall be limited to A3 emission only.

NOTE.—All stations, regardless of date of original licensing must meet the Authorized Bandwidth and maximum frequency deviation specifications contained in paragraph (b) by August 31, 1978.

§ 74.463 Modulation requirements.

(a) Each new remote pickup broadcast station authorized pursuant to an application accepted for filing after August 31, 1977, and authorized to operate with a power output in excess of 3 watts shall be equipped with a device which will automatically prevent modulation in excess of the limits set forth in this Subpart.

(b) If amplitude modulation is employed, modulation shall not exceed 100 percent on negative peaks.

(c) If frequency modulation is employed, emission shall conform to the requirements specified in § 74.462.

§ 74.464 Frequency tolerance.

The licensee of a remote pickup broadcast station or system shall maintain the operating frequency of each such station in accordance with the following:

Frequency range	Tolerance (percent)	
	Base station	Mobile station
1.6 to 2 MHz:		
200 W or less	0.01	0.02
Over 200 W [1]	.005	.02
25 to 30 MHz:		
3 W or less	.002	.005
Over 3 W	.002	.002
30 to 300 MHz:		
3 W or less	.0005	.005
Over 3 W	.0005	.0005
300 to 500 MHz, all powers	.00025	.0005

[1] The listing of tolerances for power over 200 W is in accordance with treaty values and shall not be construed as a finding that such power will be authorized.

§ 74.465 Frequency monitors and measurements.

(a) The licensee of a remote pickup broadcast station or system shall provide the necessary means to assure that all operating frequencies are maintained within the allowed tolerances. The date and time of each frequency check, the frequency as measured, a description or identification of the method employed and identification of the transmitter on which the measurement is made shall be entered in the operating log.

(b) Frequency measurements for each transmitter shall be made as often as necessary to assure proper operation. In any event, the frequency of a station authorized to operate with output power in excess of 3 watts shall be measured when the transmitter is initially installed and at intervals once each calendar year at intervals no more than 14 months apart.

§ 74.466 Station inspections.

The licensee of each remote pickup or low power auxiliary broadcast station or system shall make such station or system available for inspection by representatives of the Commission at any reasonable hour.

§ 74.467 Posting of licenses.

(a) The license for a remote pickup broadcast station or system and any other instrument of authorization or individual order concerning the construction of the equipment or manner of operation shall be posted with the license of any associated broadcasting station. Licenses issued to eligible network entities shall be retained in the licensees files at the address shown on the authorization.

(b) At the operating position for each transmitter there shall be displayed an identification label, provided by the licensee, showing the call sign, frequency(ies) and the unit designator, if any, of the station, the name and address of the licensee, the call letters of the associated broadcasting station or stations or name of the network, and, if appropriate, any condition set forth in the station or system license which is necessary to assure that the equipment is operated properly.

(c) If the station is authorized to operate as an automatic relay station, and is operated at an unattended site, the call sign and location of the associated broadcasting station or stations or network, together with the legend "Automatic Relay Station," shall be displayed at the relay transmitter site. The required display shall be affixed to the transmitter housing or antenna supporting structure so as to be visible to a person standing on the group at the transmitter site, or if the transmitting facilities are installed on the roof of a building the required display must be visible to a person standing on the roof. The display shall be prepared so as to withstand normal weathering for a reasonable period of time and shall be maintained in a legible condition by the licensee.

§ 74.468 Operator requirements.

(a) Except under the circumstances specified in paragraph (d) of this section, a remote pickup or low power auxiliary broadcast station may be operated by any person designed by and under control of the station licensee. That person need not be a licensed operator under Part 13 (Commercial Radio Operators) of the Commission' rules and regulations.

(b) Automatic relay stations authorized pursuant to the provisions of § 74.432 (c)(1) may be operated unattended.

(c) The provisions of this section authorizing unlicensed persons to operate remote pickup or low power auxiliary broadcast stations, or authorizing unattended operation of such stations in certain circumstances, shall not be construed to change or diminish in any respect the responsibility of a station licensee to have and to maintain control over the stations licensed to it or for the proper functioning and operation of those stations in accordance with the terms of the station or system license and pertinent Commission rules and regulations.

(d) All transmitter repairs or adjustments which may affect the proper operation of a remote pickup broadcast station shall be made by or under the immediate supervision of a person holding a first or second-class commercial radiotelephone operator's license.

(e) The person operating a remote pickup broadcast station may, at the discretion of the licensee, be employed for other duties, including operation of another station or stations in accordance with the rules and regulations governing operation of such other stations: *Provided*, The additional duties shall in no way interfere with the duties connected with the operation of the remote pickup broadcast station.

§ 74.469 Painting and lighting of antenna structures.

The painting and lighting of antenna structures employed by the stations licensed under this Subpart, where required, will be specified in the authorization issued by the Commission. Part 17 of the Commission's Rules and Regulations set forth the conditions under which painting and lighting will be required and the responsibility of the licensee with regard thereto.

§ 74.470 Additional orders.

In case the rules contained in this part do not cover all phases of operation or experimentation with respect to external effects, the Commission may make supplemental or additional orders in each case as may be deemed necessary.

OTHER OPERATING REQUIREMENTS

§ 74.481 Logs and records.

(a) The licensee of a remote pickup broadcast station system shall, for each station or system separately licensed, maintain an operating log in which entries shall be made in accordance with the following:

(1) If the instrument of authorization requires painting and lighting of an antenna structure, entries required by § 17.49 of the Commission's rules and regulations. Such entries shall be made whether or not the transmitter is used.

(2) An entry of frequency measurements made pursuant to § 74.465.

(3) An entry when service or maintenance is performed on any transmitter, if such service or maintenance could affect proper operation. The entry shall include a description of the work performed, the date and the signature and license serial number of the operator performing the service or maintenance duties or under whose supervision such duties have been performed.

(4) Entries as specifically requested by the Commission.

(b) Entries in the operating log shall be made by a person having knowledge of the facts entered. That person shall sign and date the log but the licensee shall not, thereby, be relieved of its responsibility to maintain complete and accurate logs and records.

(c) No provision of this section shall be construed as prohibiting the recording or other automatic maintenance of data required for the station or system log. However, where such automatic logging is used, the licensee shall comply with the following requirements:

(1) The licensee, when employing automatic logging must be able to accurately furnish the Commission with all information required to be logged.

(2) Each recording shall bear a statement, signed and dated by the licensee or a duly authorized agent of the licensee, attesting to the accuracy and completeness of the recorded information. Any information required to be logged which cannot be incorporated in the automatic process shall be similarly authenticated.

(3) The licensee shall extract any required information from the recording as requested by the Commission or its duly authorized representative and submit it in written log form.

(d) The licensee of a remote pickup broadcast system shall maintain a record of unit designators and the stations to which each designator has been assigned.

(e) Each licensee authorized to operate low power broadcast auxiliary stations shall maintain a record listing the current location of all such devices, pursuant to § 74.435(n).

(f) Licensees in Alaska, Guam, Hawaii, Puerto Rico, or the Virgin Islands, operating remote pickup broadcast base stations unattended pursuant to § 74.432 (c)(6), shall maintain an operating log for each circuit in which such stations are operated. The operating log shall identify the station(s) being operated unattended, indicate the time and date of the beginning and end of each period of operation, identify the designed person on duty at the receiving end of the circuits and include notations, as appropriate, pertaining to operation of the station or stations included in the circuit.

(g) Remote pickup broadcast station or system logs and records may be kept at any location convenient to the licensee: *Provided,* Such log and records shall be readily available for inspection by a duly authorized representative of the Commission upon request. Logs and records shall be retained for a period of two years.

§ 74.432 Station identification.

(a) Except for stations licensed pursuant to § 74.435, the Commission will assign a call sign for each remote pickup broadcast station or system and, for systems, the licensee shall assign a unit designator to each station in the system. The station or system call sign, and unit designator where appropriate, shall be transmitted by the station at the beginning and end of each period of operation. A period of operation may consist of a single continuous transmission or a series of intermittent transmissions pertaining to a single event.

(b) In cases where a period of operation is of more than one hour duration identification of remote pickup broadcast stations participating in the operation shall be made at approximately one-hour intervals. Identification transmissions during operation need not be made when to make such transmission would interrupt a single consecutive speech, play, religious service, symphony, concert, or any type of production. In such cases, the identification transmissions shall be made at the first interruption in the program continuity and at the conclusion thereof. Hourly identification may be accomplished either by transmission of the station or system call sign and unit designator assigned to the individual station or identification of an associated broadcasting station or network with which the remote pickup broadcast station is being used.

(c) In cases where an automatic relay station is a part of the circuit, the call sign of the relay transmitter may be transmitted automatically by the relay transmitter or by the remote pickup broadcast base or mobile station that actuates the automatic relay station.

APPENDIX A

COMMENTS

Sinclair Stations (Sinclair)
A. Earl Cullum, Jr. and Associates (Cullum)
Readex Electronics, Inc. (Readex)
Vega Division of Setco (Vega)
National Association of Manufacturers (NAM)
Atlantic Richfield Co. (Atlantic)
WHME Broadcasting (WHME)
Wheatstone Bridge Engineering Co. (Wheatstone)
Tall Texas Radio (KOKE)
Comrex Corp. (Comrex)
Paul Schuett (Schuett)
Association of Federal Communications Consulting Engineers (AFCCE)
Marti Electronics, Inc. (Marti)
Mountain Broadcasting, Inc. (Mountain)
National Association of Business and Educational Radio (NABER)
American Broadcasting Companies, Inc. (ABC)
National Broadcasting Co. (NBC)
Association for Broadcast Engineering Standards, Inc. (ABES)
Special Industrial Radio Service Associations, Inc. (SIRSA).
Utilities Telecommunications Council (UTC)
Central Committee of The American Petroleum Institute (Central Committee)
WBEN, Inc. (WBEN)
CBS, Inc. (CBS)
National Association of Broadcasters (NAB)
The Hearst Corp. (WBAL-TV)
Mutual Boradcasting System, Inc. (Mutual)

REPLY COMMENTS

National Association of Business and Educational Radio (NABER)
CBS, Inc. (CBS)
Utilities Telecommunications Council (UTC)
Central Committee of the American Petroleum Institute (Central Committee)

[FR Doc.76-20538 Filed 7-16-76;8:45 am]

PART 78—CABLE TELEVISION RELAY SERVICES

Cable Television Relay Service (CARS)

By the Executive Director: 1. A review of the Cable Television Relay Service (CARS) Rules, Part 78 of the Commission's rules and regulations, has disclosed that several requirements can properly be relaxed and that certain clarifications are appropriate.

2. In establishing procedures to implement the National Environmental Policy Act of 1969, we did not deem it necessary to repeat the text of such procedures throughout all of our rules governing construction of radio stations. We consider it appropriate, however, to direct the attention of applicants for CARS construction permits to the procedures contained in Subpart I of Part 1 of the Commission's rules, and we are amending § 78.15 accordingly.

3. CARS licensees using antenna structures which require air navigation markings must comply with the provisions of Part 17 of the Rules (Construction, Marking, and Lighting of Antenna Structures). Sections 78.63 and 78.69 refer a CARS licensee to the requirements contained in Part 17. For the convenience of station licensees and to eliminate unnecessary cross-references, we are amending §§ 78.63 and 78.69 to include therein the pertinent requirements of Part 17 concerning antenna structures used by CARS stations.

4. Presently, § 78.69 of the rules requires CARS licensees to record the date and time of the beginning and end of each period of operation of each transmitter. The rule is burdensome for those licensees whose stations operate unattended, pursuant to § 78.53. To remove this unnecessary burden, we are amending § 78.69 to eliminate this recordkeeping requirement at stations which are operated unattended.

5. We are also amending the rules as to equipment changes which require prior Commission authorization. Presently, pursuant to § 78.109, a CARS licensee or permittee must file a formal application to replace a station's transmitter, except for replacement with an identical transmitter. Since transmitters made by different manufacturers often have nearly the same emission characteristics, we believe that a licensee or permittee may change transmitters and still maintain proper operation of the station. Accordingly, we shall allow CARS licensees and permittees to replace a transmitter provided that there is no change in the type of modulation or in the authorized operating power (antenna input power), and further provided that the emission bandwidth is not increased beyond the authorized bandwidth. Licensees and permittees are reminded, however, that the Commission must be notified of such changes pursuant to § 78.109(b), and that a transmitter must meet the requirements of § 78.107(b).

6. Section 78.109 also requires a formal application to change a CARS station's transmitter control system. We believe that this procedure is unnecessary and that a notification prior to the change is all that is needed. Accordingly, we shall not require a formal application for a change in a CARS station's control system, and we are deleting such requirement from § 78.109. However, we believe that prior notice is appropriate, and we are therefore amending §§ 78.51 and 78.53 of the rules to require notification to the Commission at least ten days prior to a change in a station's control system to either remote control or unattended operation. Such notification must include the presently required showing as to how the licensee or permittee will comply with the requirements of §§ 78.51 or 78.53. We are retaining the right to notify a licensee or permittee not to make a change in a station's control system, or to cancel, suspend, or change the date of commencement of such remote control or unattended operation, when such action appears to be in the public interest, convenience, or necessity.

7. The Commission has received a number of informal inquires as to whether a change in polarization of an emitted signal requires prior Commission authorization. The polarization of signals has a significant effect on the potential interference between stations, and, in issuing CARS authorizations, we specifically designate the polarization for each channel. Thus, a change in a signal's polarization is, in fact, a change in the assigned frequency. To clarify this point, we are amending § 78.109(a)(7) to include a change in polarization as a change which requires prior Commission authorization.

8. Section 78.113 requires CARS licensees to make frequency measurements to insure compliance with our frequency tolerance requirements, with the measurements being made at intervals of no more than one month. The requirement of a monthly measurement is more stringent than similar requirements in the Broadcast Auxiliary Service and in the Private Operational-Fixed Service, which provide for annual measurements. We no longer believe that a monthly test is needed to insure compliance with our frequency tolerance requirements. Accordingly, we are amending § 78.113 to require frequency measurements upon initial installation of a transmitter, on an annual basis thereafter, and when any change is made in a transmitter which may affect the carrier frequency or the stability thereof.

9. Authority for the attached amendments is contained in 47 U.S.C. 151, 152, 301, 303, and 307; and in § 0.231(d) of the Commission's rules. Inasmuch as the amendments ordered are nonsubstantive editorial revisions of the Commission's rules and regulations, impose no new requirements, and are intended only to relax or clarify existing requirements, compliance with the prior notice, procedural and effective date provisions of the Administrative Procedure Act, 5 U.S.C. 553, would serve no useful purpose and is unnecessary.

10. Accordingly, *It is ordered,* That effective July 29, 1976, Part 78 of the Commission's rules and regulations is amended as set forth below.

(Secs. 1, 2, 301, 303, 307, 48 Stat., as amended, 1064, 1081, 1082, 1083; 47 U.S.C. 151, 152, 301, 303, 307)

Adopted: July 14, 1976.

Released: July 16, 1976.

FEDERAL COMMUNICATIONS COMMISSION,
R. D. LICHTWARDT,
Executive Director.

Part 78 of Chapter I of Title 47 of the Code of Federal Regulations is amended in the following manner:

1. Section 78.15 is revised by adding paragraph (c) to read as follows:

§ 78.15 Contents of applications.

* * * * *

(c) CARS applicants for construction permits or modifications of construction permits must follow the procedures prescribed in Subpart I of Part 1 of this chapter (§§ 1.1301 through 1.1319) unless Commission action authorizing construction of a CARS station would be a minor action within the meaning of Subpart I of Part 1.

2. Section 78.15(a) is revised and (c) is added to read as follows:

§ 78.51 Remote control operation.

(a) A CARS station may be operated by remote control: *Provided,* That such operation is conducted in accordance with the conditions listed below: *And provided further,* That the Commission, in Washington, D.C., is notified at least 10 days prior to the beginning of such operation and that such notification is accompanied by a detailed description showing the manner of compliance with the following conditions:

* * * * *

(c) The Commission may notify the licensee or permittee not to commence remote control operation, or to cancel, suspend, or change the date of the beginning of such operation as and when such action may appear to be in the public interest, convenience, or necessity.

3. Section 78.53(a) is revised and (c) is added to read as follows:

§ 78.53 Unattended operation.

(a) A CARS station other than a CARS pickup station may be operated unattended: *Provided,* That such operation is conducted in accordance with the conditions listed below: *And provided further,* That the Commission, in Washington, D.C., is notified at least 10 days prior to the beginning of such operation and that such notification is accompanied by a detailed description showing the manner of compliance with the following conditions:

* * * * *

(c) The Commission may notify the licensee or permittee not to commence unattended operation, or to cancel, suspend, or change the date of the beginning of such operation as and when such action may appear to be in the public interest, convenience, or necessity.

4. Section 78.63, headnote and text, are revised to read as follows:

§ 78.63 Inspection and maintenance of tower marking and associated control equipment.

The licensee or permittee of any CARS station which has an antenna structure required to be painted or illuminated pursuant to the provisions of section 303(q) of the Communications Act of 1934, as amended, and/or Part 17 of this chapter, shall operate and maintain the tower marking and associated control equipment in accordance with the following:

(a) The tower lights shall be observed at least once each 24 hours, either visually or by observing an automatic and properly maintained indicator designed to register any failure of such lights, to insure that all such lights are functioning properly as required; or, alternatively, there shall be provided and properly maintained an automatic alarm system designed to detect any failure of the tower lights and to provide indication of such failure to the licensee.

(b) Any observed or otherwise known failure of a code or rotating beacon light or top light not corrected within thirty minutes, regardless of the cause of such failure, shall be reported immediately by telephone or telegraph to the nearest Flight Service Station or office of the Federal Aviation Administration. Further notification by telephone or telegraph shall be given immediately upon resumption of the required illumination.

(c) All automatic or mechanical control devices, indicators, and alarm systems associated with the tower lights shall be inspected at intervals not to exceed three months, to insure that such apparatus is functioning properly.

(d) Red obstruction lighting shall be exhibited from sunset to sunrise unless otherwise specified in the instrument of station authorization.

(e) All towers shall be cleaned or repainted as often as is necessary to maintain good visibility.

5. Section 78.69, headnote and text, are revised to read as follows:

§ 78.69 Station records.

Each licensee or permittee of a CARS station shall maintain records showing the following:

(a) For all attended or remotely controlled stations, the date and time of the beginning and end of each period of transmission of each channel;

(b) For all stations, the date and time of any unscheduled interruptions to the transmissions of the station, the duration of such interruptions, and the causes thereof;

(c) For all stations, the results and dates of the frequency measurements made pursuant to § 78.113 and the name of the person or persons making the measurements;

(d) For all stations, when service or maintenance duties are performed, which may affect a station's proper operation, the responsible operator shall sign and date an entry in the station's records, giving:

(1) Pertinent details of all transmitter adjustments performed by the operator or under the operator's supervision;

(2) The operator's name and address and the class, serial number, and expiration date of the operator's license. This information, so long as it remains unchanged, is not required to be repeated in the case of a person who is regularly employed as operator on a full-time basis at the station.

(e) When a station in this service has an antenna structure which is required to be illuminated, appropriate entries shall be made as follows:

(1) The time the tower lights are turned on and off each day, if manually controlled.

(2) The time the daily check of proper operation of the tower lights was made, if an automatic alarm system is not employed.

(3) In the event of any observed or otherwise known failure of a tower light:

(i) Nature of such failure.

(ii) Date and time the failure was observed or otherwise noted.

(iii) Date, time, and nature of the adjustments, repairs, or replacements made.

(iv) Identification of Flight Service Station (Federal Aviation Administration) notified of the failure of any code or rotating beacon light not corrected within 30 minutes, and the date and time such notice was given.

(v) Date and time notice was given to the Flight Service Station (Federal Aviation Administration) that the required illumination was resumed.

(4) Upon completion of the 3-month periodic inspection required by § 78.63 (c):

(i) The date of the inspection and the condition of all tower lights and associated tower lighting control devices, indicators, and alarm systems.

(ii) Any adjustments, replacements, or repairs made to insure compliance with the lighting requirements and the date such adjustments, replacements, or repairs were made.

(f) For all stations, station record entries shall be made in an orderly and legible manner by the person or persons competent to do so, having actual knowledge of the facts required, who shall sign the station record when starting duty and again when going off duty.

(g) For all stations, no station record or portion thereof shall be erased, obliterated, or willfully destroyed within the period of retention required by rule. Any necessary correction may be made only by the person who made the original entry who shall strike out the erroneous portion, initial the correction made, and show the date the correction was made.

(h) For all stations, station records shall be retained for a period of not less than 2 years. The Commission reserves the right to order retention of station records for a longer period of time. In cases where the licensee or permittee has notice of any claim or complaint, the station record shall be retained until such claim or complaint has been fully satisfied or until the same has been barred by statute limiting the time for filing of suits upon such claims.

6. Section 78.109(a) is amended by revising paragraphs (a)(1), (a)(5), and (a)(7) to read as follows:

§ 78.109 Equipment changes.

(a) * * *

(1) Any increase in emission bandwidth beyond that authorized;

* * * * *

(5) Any change in the type of modulation;

* * * * *

(7) Any change in frequency assignment, including polarization;

* * * * *

7. Section 78.113 is amended by revising paragraph (a) to read as follows:

§ 78.113 Frequency monitors and measurements.

(a) The licensee or permittee of each station shall employ a suitable procedure to determine that the carrier frequency of each transmitter is maintained within the tolerance prescribed in § 78.111 at all times. This determination shall be made, and the results thereof entered in the station records: when a transmitter is initially installed; when any change is made in a transmitter which may affect the carrier frequency or the stability thereof; or in any case at intervals not exceeding one year.

* * * * *

[FR Doc.76-20730 Filed 7-16-76;8:45 am]

Title 49—Transportation

SUBTITLE A—OFFICE OF THE SECRETARY OF TRANSPORTATION

[OST Docket No. 1, Amdt. I-113]

PART 1—ORGANIZATION AND DELEGATION OF POWERS AND DUTIES

Correction

In FR Doc. 75-25436, appearing at page 43901, in the issue for Wednesday, September 24, 1975, and corrected at page 20172, in the issue for Monday, May 17, 1976, "§ 1.47(k)", should be "§ 1.47(j)".

CHAPTER V—NATIONAL HIGHWAY TRAFFIC SAFETY ADMINISTRATION

[Docket Nos. 75-07; 75-16; Notices 03, 09]

PART 571—FEDERAL MOTOR VEHICLE SAFETY STANDARDS

Republication of Brake System Standards

STANDARD NOS. 105-75 AND 121

This notice republishes in their entirety Standard No. 105-75, *Hydraulic Brake Systems*, and Standard No. 121, *Air Brake Systems*, because the number and complexity of recent amendments to these standards may have created confusion for some interested persons.

Standard No. 105-75 (49 CFR 571.105-75) was issued September 1972 (37 FR 17970, September 2, 1972) and has been amended numerous times since issuance. Although an up-to-date and complete text of the standard appears each year in the republished Code of Federal Regulations, several complex amendments have been made to the standard in the past year that are not reflected in the most recent up-to-date text. To assist interested persons who must be certain of the text's provisions, the agency herewith publishes the standard in its entirety. Interested persons are advised that amendments of Standard No. 105-75 may occur in the future, although no proposals are outstanding at this time.

In a related matter, General Motors Corporation has brought to the agency's attention an inadvertent deletion of one sentence from one section of Standard No. 105-75. A statement was added to the text of S5.1.5.2(a)(2) to permit an interim increase in permissible control force for the fifth wet recovery stop (40 FR 24525, June 9, 1975). Inadvertently, this sentence was deleted from S5.1.5.2(a)(2) in a subsequent rulemaking action (40 FR 42872, September 17, 1975), although the preamble to the notice made clear that "The new wording in no way modifies the meaning of S5.1.4(a)(2) and S5.1.5.2(a)(2)." To correct this omission, the sentence appears in this publication. It has been moved to S5.1.5.2(a)(1) because it concerns the maximum pedal force limit in that section, rather than the minimum pedal force limit in S5.1.5.2(a)(2) where it appeared in the past.

Standard No. 121 (49 CFR 571.121) was issued in February 1971 (36 FR 3817, February 27, 1971) and has also been amended numerous times since issuance. Several amendments have occurred since the most recent publication of the standard in its entirety. For the reasons cited with regard to Standard No. 105-75, the agency herewith publishes the standard in its entirety. Interested persons are advised that three proposals to amend the standard are outstanding (40 FR 45200, October 1, 1975) (40 FR 56920, December 5, 1975) (41 FR 20706, May 20, 1976) and that amendments to the text of the standard may be made in the future.

It has also been noted that a clarification could be made to the language of S3 of the standard that excludes until September 1, 1977, vehicles that combine with other vehicles to form auto transporters. The temporary exclusion was added to the standard in January 1975 (40 FR 1246, January 7, 1975). To make the effect of that action more clear, the language in the second sentence of the text "or to any vehicle which" is changed in this republication to read "or that". This modification of the language has no effect on the requirements of this standard and notice and opportunity to comment are therefore found to be unnecessary.

In consideration of the foregoing, Standard No. 105-75 (49 CFR 571.105-75) and Standard No. 121 (49 CFR 571.121) are republished to read as set forth below.

(Sec. 103, 119, Pub. L. 89-563, 80 Stat. 718 (15 U.S.C. 1392, 1407); delegations of authority at 49 CFR 1.50 and 49 CFR 501.8.)

Issued on June 30, 1976.

ROBERT L. CARTER,
Associate Administrator, Motor Vehicle Programs.

§ 571.105-75 Standard No. 105-75; Hydraulic brake systems (Effective Jan. 1, 1976).

S1. *Scope.* This standard specifies requirements for hydraulic service brake and associated parking brake systems.

S2. *Purpose.* The purpose of this standard is to insure safe braking performance under normal and emergency conditions.

S3. *Application.* This standard applies to passenger cars equipped with hydraulic service brake systems, and to school buses manufactured on and after October 12, 1976, with hydraulic service brake systems.

S4. *Definitions.* "Antilock system" means a portion of a service brake system that automatically controls the degree of rotational wheel slip at one or more road wheels of the vehicle during braking.

"Backup system" means a portion of a service brake system, such as a pump, that supplies energy, in the event of a primary brake power source failure.

"Brake power assist unit" means a device installed in a hydraulic brake system that reduces the operator effort required to actuate the system, and that if inoperative does not prevent the operator from braking the vehicle by a continued application of muscular force on the service brake control.

"Brake power unit" means a device installed in a brake system that provides the energy required to actuate the brakes, either directly or indirectly through an auxiliary device, with the operator action consisting only of modulating the energy application level.

"Hydraulic brake system" means a system that uses hydraulic fluid as a medium for transmitting force from a service brake control to the service brake, and that may incorporate a brake power assist unit, or a brake power unit.

"Initial brake temperature" means the average temperature of the service

brakes on the hottest axle of the vehicle 0.2 mi before any brake application.

"Lightly loaded vehicle weight" means:

(a) For vehicles with a GVWR of 10,000 lb or less, unloaded vehicle weight plus 300 lb. (including driver and instrumentation);

(b) For vehicles with a GVWR greater than 10,000 lb, unloaded vehicle weight plus 500 lb (including driver and instrumentation).

"Parking mechanism" means a component or subsystem of the drive train that locks the drive train when the transmission control is placed in a parking or other gear position and the ignition key is removed.

"Pressure component" means a brake system component that contains the brake system fluid and controls or senses the fluid pressure.

"Skid number" means the frictional resistance of a pavement measured in accordance with American Society for Testing and Materials (ASTM) Method E-274-70 (as revised July, 1974) at 40 mph, omitting wate rdelivery as specified in paragraphs 7.1 and 7.2 of that method.

"Snub" means the braking deceleration of a vehicle from a higher reference speed to a lower reference speed that is greater than zero.

"Speed attainable in 2 mi" means the speed attainable by accelerating at maximum rate from a standing start for 2 mi on a level surface.

"Spike stop" means a stop resulting from the application of 200 lbs of force on the service brake control in 0.08 s.

"Split service brake system" means a brake system consisting of two or more subsystems actuated by a single control designed so that a leakage-type failure of a pressure component in a single subsystem (except structural failure of a housing that is common to two or more subsystems) shall not impair the operation of any other subsystem.

"Stopping distance" means the distance traveled by a vehicle from the point of application of force to the brake control to the point at which the vehicle reaches a full stop.

"Variable proportioning brake system" means a system that automatically adjusts the braking force at the axles to compensate for vehicle static axle loading and/or dynamic weight transfer between axles during deceleration.

S5 *Requirements.*

S5.1 *Service brake system.* Each vehicle shall be capable of meeting the requirements of S5.1.1 through S5.1.6, under the conditions specified in S6, when tested according to the procedures and in the sequence set forth in S7. Except as noted in S5.1.1.2 and S5.1.1.4, if a vehicle is incapable of attaining a speed specified in S5.1.1, S5.1.2, S5.1.3, or S5.1.6, its service brakes shall be capable of stopping the vehicle from the multiple of 5 mph, that is 4 to 8 mph less than the speed attainable in 2 miles, within distances that do not exceed the corresponding distances specified in table II. If a vehicle is incapable of attaining a speed specified in S5.1.4 in the time or distance interval set forth, it shall be tested at the highest speed attainable in the time or distance interval specified.

S5.1.1 *Stopping distance.* The service brakes shall be capable of stopping each vehicle in four effectiveness tests within the distances, and from the speeds specified below.

S5.1.1.1 In the first (preburnished) effectiveness test, the vehicle shall be capable of stopping from 30 mph and 60 mph within the corresponding distances specified in column I of table II.

S5.1.1.2 In the second effectiveness test, the vehicle shall be capable of stopping from 30 and 60 mph within the corresponding distances specified in column II of table II. If the speed attainable in 2 miles is not less than 84 mph, a passenger car shall also be capable of stopping from 80 mph within the correspondent distance specified in column II of table II.

S5.1.1.3 In the third effectiveness test the vehicle shall be capable of stopping at lightly loaded vehicle weight from 60 mph within the corresponding distance specified in column III of table II.

S5.1.1.4 In the fourth effectiveness test, a vehicle with a GVWR of 10,000 pounds or less shall be capable of stopping from 30 and 60 mph within the corresponding distances specified in Column I of Table II. If the speed attainable in 2 miles is not less than 84 mph, a passenger car shall also be capable of stopping from 80 mph within the corresponding distance specified in Column I of Table II.

If the speed attainable in 2 miles is not less than 99 mph, a passenger car shall, in addition, be capable of stopping from the applicable speed indicated below, within the corresponding distance specified in Column I of Table II.

Speed attainable in 2 miles (mph)	*Required to stop from (mph)*
Not less than 99 but less than 104	95
104 or more	100

S5.1.2 *Partial failure.* S5.1.2.1 In vehicles manufactured with a split service brake system, in the event of a rupture or leakage type of failure in a single subsystem, other than a structural failure of a housing that is common to two or more subsystems, the remaining portion(s) of the service brake system shall continue to operate and shall be capable of stopping a vehicle from 60 mph within the corresponding distance specified in Column IV of Table II.

S5.1.2.2 In vehicles not manufactured with a split service brake system, in the event of any one rupture or leakage type of failure in any component of the service brake system the vehicle shall, by operation of the service brake control, be capable of stopping 10 times consecutively from 60 mph within the corresponding distance specified in Column IV of Table II.

S5.1.3 *Inoperative brake power assist unit or brake power unit.* A passenger car equipped with one or more brake power assist units shall meet the requirements of either S5.1.3.1, S.5.1.3.2, or S5.1.3.4 (chosen at the option of the manufacturer), and a passenger car equipped with one or more brake power units shall meet the requirements of either S5.1.3.1, S.5.1.3.3, or S5.1.3.4 (chosen at the option of the manufacturer). A vehicle other than a passenger car shall meet the requirements of S5.1.3.1.

S5.1.3.1 The service brakes on a vehicle equipped with one or more brake power assist units or brake power units, with one such unit inoperative and depleted of all reserve capability, shall be capable of stopping a vehicle from 60 mph within the corresponding distance specified in column IV of table II.

S5.1.3.2 *Brake power assist units.* The service brakes on a vehicle equipped with one or more brake power assist units, with one such unit inoperative, shall be capable of stopping a vehicle from 60 mph:

(a) In six consecutive stops at an average deceleration for each stop that is not lower than that specified in column I of table III, when the inoperative unit is not initially depleted of all reserve capability; and

(b) In a final stop, at an average deceleration that is not lower than 7 fpsps (equivalent stopping distance 554 feet) when the inoperative unit is depleted of all reserve capability.

S5.1.3.3 *Brake power units.* The service brakes of a vehicle equipped with one or more brake power units with an accumulator-type reserve system, with any one failure in any one unit shall be capable of stopping the vehicle from 60 mph—

(a) In 10 consecutive stops at an average deceleration for each stop that is not lower than that specified in column II of table III, when the unit is not initially depleted of all reserve capability; and

(b) In a final stop, at an average deceleration that is not lower than 7 fpsps (equivalent stopping distance 554 feet) when the failed element of the unit is depleted of all reserve capability.

S5.1.3.4 *Brake power assist and brake power units.* The service brakes of a vehicle equipped with one or more brake power assist units or brake power units with a backup system, with one brake power assist unit or brake power unit inoperative and depleted of all reserve capability and with only the backup system operating in the failed subsystem, shall be capable of stopping the vehicle from 60 mph in 15 consecutive stops at an average deceleration for each stop that is not lower than 12 fpsps (equivalent stopping distance 323 feet).

S5.1.4 *Fade and recovery.* The service brakes shall be capable of stopping each vehicle in two fade and recovery tests as specified below.

S5.1.4.1 The control force used for the baseline check stops or snubs shall be not less than 10 pounds, nor more than 60 pounds, except that the control force for a vehicle with a GVWR of 10,000 pounds or more may be between 10 pounds and 90 pounds.

S5.1.4.2 (a) Each vehicle with GVWR of 10,000 lbs or less shall be capable of making 5 fade stops (10 fade stops on the second test) from 60 mph at a deceleration not lower than 15 fpsps for each stop, followed by 5

fade stops at the maximum deceleration attainable from 5 to 15 fpsps.

(b) Each vehicle with a GVWR greater than 10,000 pounds shall be capable of making 10 fade snubs (20 fade snubs on the second test) from 40 mph to 20 mph at 10 fpsps for each snub.

S5.1.4.3(a) Each vehicle with a GVWR of 10,000 pounds or less shall be capable of making five recovery stops from 30 mph at 10 fpsps for each stop, with a control force application that falls within the following maximum and minimum limits:

(1) A maximum for the first four recovery stops of 150 pounds, and for the fifth stop, of 20 pounds more than the average control force for the baseline check; and

(2) A minimum of—

(A) The average control force for the baseline check minus 10 pounds, or

(B) The average control force for the baseline check times 0.60,

whichever is lower (but in no case lower than 5 pounds).

(b) Each vehicle with a GVWR of more than 10,000 pounds shall be capable of making five recovery snubs from 40 mph to 20 mph at 10 fpsps for each snub, with a control force application that falls within the following maximum and minimum limits:

(1) A maximum for the first four recovery shubs of 150 pounds, and for the fifth snub, of 20 pounds more than the average control force for the baseline check (but in no case more than 100 pounds); and

(2) A minimum of—

(A) The average control force for the baseline check minus 10 pounds, or

(B) The average control force for the baseline check times 0.60, whichever is lower (but in no case lower than 5 pounds).

S5.1.5 *Water recovery.* The service brakes shall be capable of stopping each vehicle in a water recovery test, as specified below.

S5.1.5.1 The control force used for the baseline check stops or snubs shall be not less than 10 pounds, nor more than 60 pounds, except that the control force for a vehicle with a GVWR of 10,000 pounds or more may be between 10 and 90 pounds.

S5.1.5.2(a) After being driven for 2 minutes at a speed of 5 mph in any combination of forward and reverse directions through a trough having a water dept of 6 inches, each vehicle with a GVWR of 10,000 pounds or less shall be capable of making five recovery stops from 30 mph at ten fpsps for each stop with a control force application that falls within the following maximum and minimum limits:

(1) A maximum for the first four recovery stops of 150 pounds, and for the fifth stop, of 45 pounds more than the average control force for the baseline check (but in no case more than 90 pounds, except that the maximum control force for the fifth stop in the case of a vehicle manufactured before September 1, 1976, shall be not more than plus 60 pounds of the average control force for the baseline check (but in no case more than 110 pounds).

(2) A minimum of—

(A) The average control force for the baseline check minus 10 pounds, or

(B) The average control force for the baseline check times 0.60,

whichever is lower (but in no case lower than 5 pounds).

(b) After being driven for 2 minutes at a speed of 5 mph in any combination of forward and reverse directions through a trough having a water depth of 6 inches, each vehicle with a GVWR of more than 10,000 pounds shall be capable of making five recovery stops from 30 mph at 10 fpsps for each stop with a control force application that falls within the following maximum and minimum limits:

(1) A maximum for the first four recovery stops of 150 pounds, and for the fifth stop, of 60 pounds more than the average control force for the baseline check (but in no case more than 110 pounds); and

(2) A minimum of—

(A) The average control force for the baseline check minus 10 pounds, or

(B) The average control force for the baseline check times 0.60, whichever is lower (but in no case lower than 5 pounds).

S5.1.6 *Spike stops.* Each passenger car shall be capable of making 10 spike stops from 30 mph, followed by 6 effectiveness (check) stops from 60 mph, at least one of which shall be within a corresponding stopping distance specified in column I of table II.

S5.2 *Parking brake system.* Each vehicle shall be manufactured with a parking brake system of a friction type with a solely mechanical means to retain engagement, which shall under the conditions of S6, when tested according to the procedures specified in S7, meet the requirements specified in S5.2.1, S5.2.2, or S5.2.3 as appropriate, with the system engaged—

(a) In the case of a passenger car, with a force applied to the control not to exceed 125 pounds for a foot-operated system and 90 pounds for a hand-operated system; and

(b) In the case of a school bus, with a force applied to the control not to exceed 150 pounds for a foot-operated system and 125 pounds for a hand-operated system.

S5.2.1 Except as provided in S5.2.2, the parking brake system on a vehicle with a GVWR of 10,000 pounds or less shall be capable of holding the vehicle stationary (to the limit of traction on the braked wheels) for 5 minutes in both a forward and reverse direction on a 30 percent grade.

S5.2.2 A vehicle of a type described in S5.2.1 at the option of the manufacturer may meet the requirements of S5.2.2.1, S5.2.2.2, and S5.2.2.3 instead of the requirements of S5.2.1 if:

(a) The vehicle has a transmission or transmission control which incorporates a parking mechanism, and

(b) The parking mechanism must be engaged before the ignition key can be removed.

S5.2.2.1 The vehicle's parking brake and parking mechanism, when both are engaged, shall be capable of holding the vehicle stationary (to the limit of traction of the braked wheels) for 5 minutes, in both forward and reverse directions, on a 30 percent grade.

S5.2.2.2 The vehicle's parking brake, with the parking mechanism not engaged, shall be capable of holding the vehicle stationary for 5 minutes, in both forward and reverse directions, on a 20 percent grade.

S5.2.2.3 With the parking mechanism engaged and the parking brake not engaged, the parking mechanism shall not disengage or fracture in a manner permitting vehicle movement, when the vehicle is impacted at each end, on a level surface, by a barrier moving at 2½ mph.

S5.2.3 The parking brake system on a vehicle with a GVWR greater than 10,000 pounds shall be capable of holding the vehicle stationary for 5 minutes, in both forward and reverse directions, on a 20 percent grade.

S5.3 *Brake system indicator lamp.* Each vehicle shall have one or more brake system indicator lamps, mounted in front of and in clear view of the driver, which meet the requirements of S5.3.1 through S5.3.5. However, the options provided in S5.3.1(a) shall not apply to a vehicle manufactured without a split service brake system; such a vehicle shall, to met the requirements of S5.3.1(a), be equipped with a warning indicator that activates under the conditions specified in S5.3.1(a)(4). This warning indicator shall, instead of meeting the requirements of S5.3.2. through S5.3.5, activate (while the vehicle remains capable of meeting the requirements of S5.1.2.2 and the ignition switch is in the "on" position) a continuous or intermittent audible signal and a flashing warning light, displaying the words "STOP—BRAKE FAILURE" in block capital letters not less than one-quarter of an inch in height.

S5.3.1 An indicator lamp shall be activated when the ignition (start) switch is in the "on" ("run") position and whenever any of conditions (a), (c), or (d) occur, or, at the option of the manufacturer, whenever any of conditions (b), (c), or (d) occur:

(a) A gross loss of pressure (such as caused by rupture of a brake line but not by a structural failure of a housing that is common to two or more subsystems) due to one of the following conditions (chosen at the option of the manufacturer):

(1) Before or upon application of a differential pressure of not more than 225 lb/in^2 between the active and failed brake system measured at a master cylinder outlet or a slave cylinder outlet.

(2) Before or upon application of 50 pounds of control force upon a fully manual service brake.

(3) Before or upon application of 25 pounds of control force upon a service brake with a brake power assist unit.

(4) When the supply pressure in a brake power unit drops to a level not less than one-half of the normal system pressure.

(b) A drop in the level of brake fluid in any master cylinder reservoir compartment to less than the recommended safe level specified by the manufacturer or to one-fourth of the fluid capacity of that reservoir compartment, whichever is greater.

(c) A total functional electrical failure in an antilock or variable proportioning brake system.

(d) Application of the parking brake.

S5.3.2 All indicator lamps shall be activated as a check of lamp function either when the ignition (start) switch is turned to the "on" (run) position when the engine is not running, or when the ignition (start) switch is in a position between "on" (run) and "start" that is designated by the manufacturer as a check position. However, in vehicles equipped with an automatic transmission, the activation as a check of lamp function is not required when the transmission shift lever is in a forward- or reverse drive position.

S5.3.3 Each indicator lamp activated due to a condition specified in S.5.3.1 shall remain activated as long as the condition exists, whenever the ignition (start) switch is in the "on" (run) position, whether or not the engine is running.

S5.3.4 When an indicator lamp is activated it may be steady burning or flashing.

S5.3.5 Each indicator lamp shall have a lens labeled in letters not less than ⅛-inch high, which shall be legible to the driver in daylight when lighted. The lens and the letters shall have contrasting colors, one of which is red. If a single common indicator is used, the lens shall be labeled "Brake". If separate indicator lamps are used for one or more of the various functions described in S5.3.1(a) to S5.3.1(d), the lens shall include the word "Brake" and appropriate additional labeling (use "Brake Pressure," "Brake Fluid" for S.5.3.1(a) and S5.3.1 (b)) except that if a separate parking indicator lamp is provided, the single word "Park" may be used. An anti-lock system may have a separate lens labeled "Antilock", in letters not less than one-eighth of an inch high, which shall be legible to the driver in daylight when lighted, if the indicator is used only for the antilock system. The lens and the letters shall have contratsing colors, one of which is yellow.

S5.4 *Reservoirs.*

S5.4.1 *Master cylinder reservoirs.* A master cylinder shall have a reservoir compartment for each service brake subsystem serviced by the master cylinder. Loss of fluid from one compartment shall not result in a complete loss of brake fluid from another compartment.

S5.4.2 *Reservoir capacity.* Reservoirs, whether for master cylinders or other type systems, shall have a total minimum capacity equivalent to the fluid displacement resulting when all the wheel cylinders or caliper pistons serviced by the reservoirs move from a new lining, fully retracted position (as adjusted initially to the manufacturer's recommended setting) to a fully worn, fully applied position, as determined in accordance with S7.18(c) of this standard. Reservoirs shall have completely separate compartments for each subsystem except that in reservoir systems utilizing a portion of the reservoir for a common supply to two or more subsystems, individual partial compartments shall each have a minimum volume of fluid equal to at least the volume displaced by the master cylinder piston servicing the subsystem, during a full stroke of the piston. Each brake power unit reservoir servicing only the brake system shall have a minimum capacity equivalent to the fluid displacement required to charge the system piston(s) or accumulator(s) to normal operating pressure plus the displacement resulting when all the wheel cylinders or caliper pistons serviced by the reservoir or accumulator(s) move from a new lining fully retracted position (as adjusted initially to the manufacturer's recommended setting) to a fully worn, fully applied position.

S5.4.3 *Reservoir labeling.*—Each vehicle shall have a brake fluid warning statement that reads as follows, in letters at least one-eighth of an inch high: "WARNING, Clean filler cap before removing, Use only _____ fluid from a sealed container". (Inserting the recommended type of brake fluid as specified in 49 CFR 571.116, e.g. "DOT 3"). The lettering shall be—

(a) Permanently affixed, engraved, or embossed;

(b) Located so as to be visible by direct view, either on or within 4 inches of the brake fluid reservoir filler plug or cap; and

(c) Of a color that contrasts with its background, if it is not engraved or embossed.

S5.5 *Antilock and variable proportioning brake systems.* In the event of failure (structural or functional) in an antilock or variable proportioning brake system the vehicle shall be capable of meeting the stopping distance requirements specified in S5.1.2 for service brake system partial failure.

S5.6 *Brake system integrity.* Each vehicle shall be capable of completing all performance requirements of S5 without—

(a) Detachment or fracture of any component of the braking system, such as brake springs and brake shoe or disc pad facing, other than minor cracks that do not impair attachment of the friction facing. All mechanical components of the braking system shall be intact and functional. Friction facing tearout (complete detachment of lining) shall not exceed 10 percent of the lining on any single frictional element.

(b) Any visible brake fluid or lubricant on the friction surface of the brake, or leakage at the master cylinder or brake power unit reservoir cover, seal and filler openings.

S6. *Test conditions.* The performance requirements of S5 shall be met under the following conditions. Where a range of conditions is specified, the vehicle shall be capable of meeting the requirements at all points within the range.

S6.1 *Vehicle weight.*

S6.1.1 Other than tests specified at lightly loaded vehicle weight in S7.7, S7.8, and S7.9, the vehicle is loaded to its GVWR such that the weight on each axle as measured at the tire-ground interface is in proportion to its GAWR, except that the fuel tank is filled to any level from 100 percent of capacity (corresponding to full GVWR loading) to 75 percent of capacity. However, if the weight on any axle of a vehicle at lightly loaded vehicle weight exceeds the axle's proportional share of the gross vehicle weight rating, the load required to reach GVWR is placed so that the weight on that axle remains the same as a lightly loaded vehicle weight.

S6.1.2 For the applicable tests specified in S7.7, S7.8, and S7.9, vehicle weight is lightly loaded vehicle weight, with the added weight distributed in the front passenger seat area in passenger cars and in the area adjacent to the driver's seat in buses.

S6.2 [Reserved]

S6.3 *Tire inflation pressure.* Tire inflation pressure is the pressure recommended by the vehicle manufacturer for the GVWR of the vehicle.

S.6.4 *Transmission selector control.* For S7.3, S7.5, S7.8, S7.15, S7.17, S7.11.1.2, S7.11.2.2, S7.11.3.2, and as required for S7.13, the transmission selector control is in neutral for all decelerations. For all other tests during all decelerations, the transmission selector is in the control position, other than overdrive, recommended by the manufacturer for driving on a level surface at the applicable test speed. To avoid engine stall during tests required to be run in gear a manual transmission may be shifted to neutral (or the clutch disengaged) when the vehicle speed decreases to 20 mph.

S6.5 *Engine.* Engine idle speed and ignition timing settings are according to the manufacturer's recommendations. If the vehicle is equipped with an adjustable engine speed governor, it is adjusted according to the manufacturer's recommendation.

S6.6 *Vehicle openings.* All vehicle openings (doors, windows, hood, trunk, convertible top, cargo doors, etc.) are closed except as required for instrumentation purposes.

S6.7 *Ambient temperature.* The ambient temperature is any temperature between 32° F. and 100° F.

S6.8 *Wind velocity.* The wind velocity is zero.

S6.9 *Road surface.* Road tests are conducted on a 12-foot-wide, level roadway having a skid number of 81. Burnish stops are conducted on any surface. The parking brake test surface is clean, dry, smooth Portland cement concrete.

S6.10 *Vehicle position.* The vehicle is alined in the center of the roadway at the start of each brake application. Stops, other than spike stops, are made without any part of the vehicle leaving the roadway. Except as noted below,

stops are made without lockup of any wheel at speeds greater than 10 mph. There may be controlled lockup on an antilock-equipped axle, and lockup of not more than one wheel per vehicle, uncontrolled by an antilock system. Locked wheels at speeds greater than 10 mph are allowed during spike stops (but not spike check stops), partial failure stops and inoperative brakepower or power assist unit stops.

S6.11 *Thermocouples.* The brake temperature is measured by plug-type thermocouples installed in the approximate center of the facing length and width of the most heavily loaded shoe or disc pad, one per brake, as shown in figure 1. A second thermocouple may be installed at the beginning of the test sequence if the lining wear is expected to reach a point causing the first thermocouple to contact the metal rubbing surface of a drum or rotor. For center-grooved shoes or pads, thermocouples are installed within one-eighth of an inch to one-quarter inch of the groove and as close to the center as possible.

S6.12 *Initial brake temperature.* Unless otherwise specified the brake temperature is 150° F. to 200° F.

S6.13 *Control forces.* Unless otherwise specified, the force applied to a brake control is not less than 15 lb and not more than 150 lb.

S7. *Test procedures and sequence.* Each vehicle shall be capable of meeting all the requirements of S5 when tested according to the procedures and in the sequence set forth below, without replacing any brake system part or making any adjustments to the brake system other than as permitted in burnish and reburnish procedures and in S7.9 and S7.10. Automatic adjusters may be locked out, according to the manufacturer's recommendation, when the vehicle is prepared for testing. If this option is selected, adjusters must remain locked out for entire sequence of tests. A vehicle shall be deemed to comply with the stopping distance requirements of S5.1 if at least one of the stops at each speed and load specified in each of S7.3, S7.5, S7.8, S7.9, S7.10, S7.15, or S7.17 (check stops) is made within a stopping distance that does not exceed the corresponding distance specified in table II. When the transmission selector control is required to be in neutral for a deceleration, a stop or snub shall be obtained by the following procedures: (1) Exceed the test speed by 4 to 8 mph; (2) close the throttle and coast in gear to approximately 2 mph above the test speed; (3) shift to neutral; and (4) when the test speed is reached, apply the service brakes.

S7.1 *Brake warming.* If the initial brake temperature for the first stop in a test procedure (other than S7.7 and S7.16) has not been reached, heat the brakes to the initial brake temperature by making not more than 10 snubs from not more than 40 to 10 mph, at a deceleration not greater than 10 fpsps.

S7.2 *Pretest instrumentation check.* Conduct a general check of instrumentation by making not more than 10 stops from a speed of not more than 30 mph, or 10 snubs from a speed of not more than 40 to 10 mph, at a deceleraton of not more than 10 fpsps. If instrument repair, replacement, or adjustment is necessary, make not more than 10 additional stops or snubs after such repair, replacement, or adjustment.

S7.3 *Service brake system—first (pre-burnish) effectiveness test.* Make six stops from 30 mph. Then make six stops from 60 mph.

S7.4 *Service brake system—burnish procedure.*

S7.4.1 *Vehicles with GVWR of 10,000 lb or less.*

S7.4.1.1 *Burnish.* Burish the brakes by making 200 stops from 40 mph at 12 fpsps (the 150 lb control force limit does not apply here). The interval from the start of one service brake application to the start of the next shall be either the time necessary to reduce the initial brake temperature to beween 230° F. and 270° F., or the distance of 1 mile, whichever occurs first. Accelerate to 40 mph after each stop and maintain that speed until making the next stop.

S7.4.1.2 *Brake adjustment — post burnish.* After burnishing, adjust the brakes manually in accordance with the manufacturer's recommendation if the brake systems are manual or if the automatic adjusters are locked out, or by making stops as recommended by the manufacturer if the automatic adjusters are operative.

S7.4.2 *Vehicles with GVWR greater than 10,000 lb.*

S7.4.2.1 *Burnish.* Burnish the brakes by making 500 snubs at 10 fpsps in the sequence specified in Table IV and within the speed ranges indicated. After each brake application accelerate to the next speed specified and maintain that speed until making the next brake application at a point 1 mi from the initial point of the previous brake application. If a vehicle cannot attain any speed specified in 1 mi, continue to accelerate until the speed specified is reached or until a point 1.5 mi from the initial point of the previous brake application is reached, whichever occurs first. If during any of the brake applications specified in Table IV the hottest brake reaches 500°F. make the remainder of the 500 applications from that snub condition, except that a higher or lower snub condition shall be followed (up to the 60 mph initial speed) as necessary to maintain a temperature of 500° F. ±50°F.

TABLE IV

Series	Snubs	Snub conditions (highest speed indicated, miles per hour)
1	175	40-20
2	25	45-20
3	25	50-20
4	25	55-20
5	250	60-20

S7.4.2.2 *Brake adjustment — post burnish.* After burnishing, adjust the brakes manually in accordance with the manufacturer's recommendation if the brake systems are manual or if the automatic adjusters are locked out, or by making stops as recommended by the manufacturer if the automatic adjusters are operative.

S7.5 *Service brake system—second effectiveness test.* Repeat S7.3. Then (for passenger cars) make four stops from 80 mph if the speed attainable in 2 miles is not less than 84 mph.

S7.6 *First reburnish.* Repeat S7.4, except make 35 burnish stops or snubs. Reburnish a vehicle whose brakes are burnished according to S7.4.2.1 by making 35 snubs from 60 mph to 20 mph, but if the hottest brake reaches 500°±50° F. make the remainder of the 35 applications from such initial speed divisible by five but less than 60 mph as necessary to maintain a temperature of 500° F±50° F.

S7.7 *Parking brake test.* The parking brake tests for any vehicle on different grades, in different directions, and for different loads may be conducted in any order. The force required for actuation of a hand-operated brake system shall be measured at the center of the hand grip area or at a distance of 1½ inches from the end of the actuation lever, as illustrated in Figure II.

S7.7.1 *Test procedure for requirements of S5.2.1.*

S7.7.1.1 Condition the parking brake friction elements so that the temperature at the beginning of the test is at any level not more than 150° F. (when the temperature of components on both ends of an axle are averaged).

S7.7.1.2 Drive the vehicle, loaded to GVWR, onto the specified grade with the longitudinal axis of the vehicle in the direction of the slope of the grade, stop the vehicle and hold it stationary by application of the service brake control, and place the transmission in neutral.

S7.7.1.3 With the vehicle held stationary by means of the service brake control, apply the parking brake by a single application of the force specified in (a) or (b), except that a series of applications to achieve the specified force may be made in the case of a parking brake system design that does not allow the application of the specified force in a single application:

(a) In the case of a passenger car, not more than 125 pounds for a foot-operated system, and not more than 90 pounds for a hand-operated system; and

(b) In the case of a school bus, not more than 150 pounds for a foot-operated system, and not more than 125 pounds for a hand-operated system.

S7.7.1.4 Following the application of the parking brake in accordance with S7.7.1.3, release all force on the service brake control and commence the measurement of time if the vehicle remains stationary. If the vehicle does not remain stationary, reapplication of the service brake to hold the vehicle stationary, with reapplication of a force to the parking brake control at the level specified in S7.7.1.3 (a) or (b) as appropriate for the vehicle being tested (without re-

lease of the ratcheting or other holding mechanism of the parking brake) may be used twice to attain a stationary position.

S7.7.1.5 Following observation of the vehicle in a stationary condition for the specified time in one direction, repeat the same test procedure with the vehicle orientation in the opposite direction on the specified grade.

S7.7.1.6 Check the operation of the parking brake application indicator required by S5.3.1(d).

S7.7.2 *Test procedure for requirements of S5.2.2.* (a) Check that transmission must be placed in park position to release key;

(b) Test as in S7.7.1, except in addition place the transmission control to engage the parking mechanism; and

(c) Test as in S7.7.1 except on a 20 percent grade, with the parking mechanism not engaged.

S7.7.3 *Lightly loaded vehicle.* Repeat S7.7.1 or S.7.7.2 as applicable except with the vehicle at lightly loaded vehicle weight.

S7.7.4 *Non-service brake type parking brake systems.* For vehicles with parking brake systems not utilizing the service brake friction elements, burnish the friction elements of such systems prior to parking brake tests according to the manufacturer's published recommendations as furnished to the purchaser. If no recommendations are furnished, run the vehicle in an unburnished condition.

S7.8 *Service brake system—lightly loaded vehicle (third effectiveness) test.* Make six stops from 60 mph with vehicle at lightly loaded vehicle weight.

S7.9 *Service brake system test-partial failure.*

S7.9.1 With the vehicle at lightly loaded vehicle weight, alter the service brake system to produce any one rupture or leakage type of failure, other than a structural failure of a housing that is common to two or more subsystems. Determine the control force, pressure level, or fluid level (as appropriate for the indicator being tested) necessary to activate the brake system indicator lamp. Make four stops if the vehicle is equipped with a split service brake system, or 10 stops if the vehicle is not so equipped, each from 60 mph, by a continuous application of the service brake control. Restore the service brake system to normal at completion of this test.

S7.9.2 Repeat S7.9.1 for each of the other subsystems.

S7.9.3 Repeat S7.9.1 and S7.9.2 with vehicle at GVWR. Restore the service brake system to normal at completion of this test.

S7.9.4 (For vehicles with antilock and/or variable proportioning brake systems). With vehicle at GVWR, disconnect functional power source, or otherwise render antilock system inoperative. Disconnect variable proportioning brake system. Make four stops, each from 60 mph. If more than one antilock or variable proportioning brake subsystem is provided, disconnect or render one subsystem inoperative and run as above. Restore system to normal at completion of this test. Repeat for each subsystem provided.

Determine whether the brake system indicator lamp is activated when the electrical power source to the antilock or variable proportioning unit is disconnected.

S7.10 *Service brake system—inoperative brake power unit or brake power assist unit test.* (For vehicles equipped with brake power unit or brake power assist unit.)

S7.10.1 *Regular procedure.* (This test need not be run if the option in S7.10.2 is selected.) On vehicles with brake power assist units, render the brake power assist unit inoperative, or one of the brake power assist unit subsystems if two or more subsystems are provided, by disconnecting the relevant power supply. Exhaust any residual brake power reserve capability of the disconnected system. On vehicles with brake power units, disconnect the primary source of power. Make four stops, each from 60 mph by a continuous application of the service brake control. Restore the system to normal at completion of this test. For vehicles equipped with more than one brake power unit or brake power assist unit, conduct tests of each in turn.

S7.10.2 *Optional Procedures—passenger cars only.* On vehicles with brake power assist units, the unit is charged to maximum prior to start of test. (Engine may be run up in speed, then throttle closed quickly to attain maximum charge on vacuum assist units.) Brake power units shall also be charged to maximum accumulator pressure prior to start of test. No recharging is allowed after start of test.

(a) (For vehicles with brake power assist units.)

Disconnect the primary source of power. Make six stops each from 60 mph, to achieve the average deceleration for each stop as specified in table III. Apply the brake control as quickly as possible. Maintain control force until vehicle has stopped.

At the completion of the stops specified above, deplete the system of any residual brake power reserve capability. Make one stop from 60 mph at an average deceleration of not lower than 7 fpsps for passenger cars (equivalent stopping distance 554 feet), or 6 fpsps for vehicles other than passenger cars (equivalent stopping distance 646 feet) and determine whether the control force exceeds 150 pounds.

(b) (For vehicles with brake power units with accumulator type systems) Test as in S7.10.2(a), except make 10 stops instead of 6 and, at the completion of the 10 stops, deplete the failed element of the brake power unit of any residual brake power reserve capability before making the final stop.

(c) (For vehicles with brake power assist or brake power units with backup systems.) If the brake power or brake power assist unit operates in conjunction with a backup system and the backup system is activated automatically in the event of a primary power failure, the backup system is operative during this test. Disconnect the primary source of power of one subsystem. Make 15 stops, each from 60 mph, with the backup system activated for the failed subsystem, to achieve an average deceleration of 12 fpsps for each stop.

(d) Restore systems to normal at completion of these tests. For vehicles equipped with more than one brakepower assist or brakepower unit, conduct tests of each in turn.

S7.11 *Service brake system—first fade and recovery test.*

S.7.11.1 *Baseline check stops or snubs.*

S.7.11.1.1 *Vehicles with GVWR of 10,000 lb or less.* Make three stops from 30 mph at 10 fpsps for each stop. Control force readings may be terminated when vehicle speed falls to 5 mph. Average the maximum brake control force required for the three stops.

S7.11.1.2 *Vehicles with GVWR greater than 10,000 pounds.* With transmission in neutral (or declutched), make three snubs from 40 to 20 mph at 10 fpsps for each snub. Average the maximum brake control force required for the three snubs.

S7.11.2 *Fade stops or snubs.*

S7.11.2.1 *Vehicles with GVWR of 10,000 pounds or less.* Make 5 stops from 60 mph at 15 fpsps followed by 5 stops at the maximum attainable deceleration between 5 and 15 fpsps for each stop. Establish an initial brake temperature before the first brake application of 130° to 150°F. Initial brake temperatures before brake applications for subsequent stops are those occurring at the distance intervals. Attain the required deceleration within 1 second and, as a minimum, maintain it for the remainder of the stopping time. Control force readings may be terminated when vehicle speed falls to 5 mph. Leave an interval of 0.4 mi between the start of brake applications. Accelerate immediately to the initial test speed after each stop. Drive 1 mi at 30 mph after the last fade stop, and immediately follow the recovery procedure specified in S7.11.3.1.

S7.11.2.2 *Vehicles with GVWR greater than 10,000 lb.* With transmission in neutral (or declutched) make 10 snubs from 40 to 20 mph at 10 fpsps for each snub. Establish an initial brake temperature before the first brake application of 130° F. to 150° F. Initial brake temperatures before brake application for subsequent snubs are those occurring in the time intervals specified below. Attain the required deceleration within 1 s and maintain it for the remainder of the snubbing time. Leave an interval of 30 s between snubs (start of brake application to start of brake application). Accelerate immediately to the initial test speed after each snub. Drive for 1.5 mi at 40 mph after the last snub and immediately follow the recovery procedure specified in S7.11.3.2.

S7.11.3 *Recovery stops or snubs.*

S7.11.3.1 *Vehicles with GVWR of 10,000 lb or less.* Make five stops from 30 mph at 10 fpsps for each stop. Control force readings may be terminated

when vehicle speed falls to 5 mph. Allow a braking distance interval of 1 mi. Immediately after each stop accelerate at maximum rate to 30 mph and maintain that speed until making the next stop. Record the maximum control force for each stop.

S7.11.3.2 *Vehicles with GVWR greater than 10,000 lb.* With transmission in neutral (or declutched) make five snubs from 40 to 20 mph at 10 fpsps for each snub. After each snub, accelerate at maximum rate to 40 mph and maintain that speed until making the next brake application at a point 1.5 mi from the point of the previous brake application. Record the maximum control force for each snub.

S7.12 *Service brake system—second reburnish.* Repeat S7.6.

S7.13 *Service brake system—second fade and recovery test.* Repeat S7.11 except in S7.11.2 run 15 fade stops or 20 snubs instead of 10.

S7.14 *Third reburnish.* Repeat S7.6.

S7.15 *Service brake system—fourth effectiveness test.* Repeat S7.5. Then (for passenger cars) make four stops from either 95 mph if the speed attainable in 2 mi is 99 to (but not including) 104 mph, or 100 mph if the speed attainable in 2 mi is 104 mph or greater.

S7.16 *Service brake system—water recovery test.*

S7.16.1 *Baseline check stop.* Make three stops from 30 mph at 10 fpsps for each stop. Control force readings may be terminated when vehicle speed falls to 5 mph. Average the maximum brake control force required for the three stops.

S7.16.2 *Wet brake recovery stops.* With the brakes fully released at all times, drive the vehicle for 2 min at a speed of 5 mph in any combination of forward and reverse directions, through a trough having a water depth of 6 in. After leaving the trough, immediately accelerate at a maximum rate to 30 mph without a brake application. Immediately upon reaching that speed make five stops, each from 30 mph at 10 fpsps for each stop. After each stop (except the last), accelerate the vehicle immediately at a maximum rate to a speed of 30 mph and begin the next stop.

S7.17 *Spike stops.* Make 10 successive spike stops from 30 mi/h with the transmission in neutral, with no reverse stops. Make spike stops by applying a control force of 200 lb while recording control force versus time. Maintain control force until vehicle has stopped. At completion of 10 spike stops, make six effectiveness stops from 60 mi/h.

S7.18 *Final inspection.* Inspect—

(a) The service brake system for detachment or fracture of any components, such as brake springs and brake shoes or disc pad facing.

(b) The friction surface of the brake, the master cylinder or brake power unit reservoir cover and seal and filler openings, for leakage of brake fluid or lubricant.

(c) The master cylinder or brake power unit reservoir for compliance with the volume and labeling requirements of S5.4.2 and S5.4.3. In determining the fully applied worn condition assume that the lining is worn to: (1) Rivet or bolt heads on riveted or bolted linings, or (2) within one thirty-seconds of an inch of shoe or pad mounting surface on bonded linings, or (3) the limit recommended by the manufacturer, whichever is larger relative to the total possible shoe or pad movement. Drums or rotors are assumed to be at nominal design drum diameter or rotor thickness. Linings are assumed adjusted for normal operating clearance in the released position.

(d) The brake system indicator light(s), for compliance with operation in various key positions, lens color, labeling, and location, in accordance with S5.3.

S7.19 *Moving barrier test.* (Only for vehicles that have been tested according to S7.7.2.) Load the vehicle to GVWR, release parking brake, and place the transmission selector control to engage the parking mechanism. With a moving barrier as described in paragraph 3.3 of SAE recommended practice J972 "Moving Barrier Collision Tests," November 1966, impact the vehicle from the front at 2½ mi/h. Keep the longitudinal axis of the barrier parallel with the longitudinal axis of the vehicle. Repeat the test, impacting the vehicle from the rear.

NOTE.—The vehicle used for this test need not be the same vehicle that has been used for the braking tests.

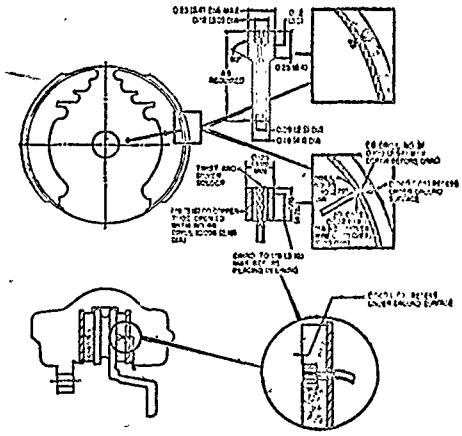

FIGURE 1 • TYPICAL PLUG THERMOCOUPLE INSTALLATIONS

Note: The second thermocouple shall be installed at .020 inch depth within 1 inch circumferentially of the thermocouple installed at .040 inch depth.

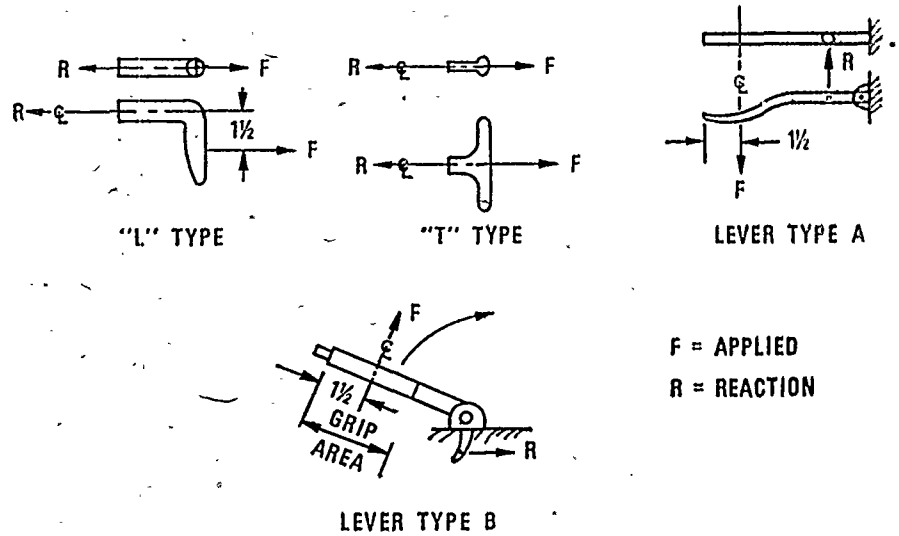

LOCATION FOR MEASURING BRAKE APPLICATION FORCE (HAND BRAKE)

FIGURE II

TABLE I—BRAKE TEST PROCEDURE

SEQUENCE AND REQUIREMENTS

No:	Sequence	Test load: Light	Test load: GVWR	Test procedure	Requirements
1	Instrumentation check			S7.2	
2	First (preburnish) effectiveness test		X	S7.3	S5.1.1.1
3	Burnish procedure		X	S7.4	
4	Second effectiveness		X	S7.5	S5.1.1.2
5	First reburnish		X	S7.6	
6	Parking brake	X	X	S7.7	S5.2
7	Third effectiveness (lightly loaded vehicle)	X		S7.8	S5.1.1.3
8	Partial failure	X	X	S7.9	S5.1.2
9	Inoperative brake power and power assist units		X	S7.10	S5.1.3
10	First fade and recovery		X	S7.11	S5.1.4
11	Second reburnish		X	S7.12	
12	Second fade and recovery		X	S7.13	S5.1.4
13	Third reburnish		X	S7.14	
14	Fourth effectiveness		X	S7.15	S5.1.1.4
15	Water recovery		X	S7.16	S5.1.5
16	Spike stops		X	S7.17	S5.1.6
17	Final inspection			S7.18	S5.6
18	Moving barrier test		X	S7.19	S5.2.2.3

TABLE II.—*Stopping distances*

Vehicle test speed (miles per hour)	Stopping distance in feet for tests indicated: I, 1st (preburnish) and 4th effectiveness; spike effectiveness check			II, 2d effectiveness			III, 3d (lightly loaded vehicle) effectiveness			IV, Inoperative brake power and power assist unit; partial failure		
	(a)	(b)	(c)	(a)	(b)	(c)	(a)	(b)	(c)	(a)	(b)	(c)
30	[1] 57	[1] 69(1st) [1] 65(4th)	[1] 88	[1] 54	[1] 65	[1] 81	51	65	81	114	194	218
35	74	110	132	70	110	132	67	110	132	155	264	312
40	96	144	173	91	144	173	87	144	173	202	345	383
45	121	182	218	115	182	218	110	182	218	257	436	490
50	150	225	264	142	225	264	135	225	264	317	538	605
55	181	272	326	172	272	326	163	272	326	383	651	732
60	[1] 216	[1] 323	[1] 388	[1] 204	[1] 323	[1] 388	[1] 194	[1] 323	[1] 388	[1] 456	[1] 775	[1] 872
80	[1] 405	(2)	(2)	[1] 383	(2)	(2)	(2)	(2)	(2)	(2)	(2)	(2)
95	607	(2)	(2)	(2)	(2)	(2)	(2)	(2)	(2)	(2)	(2)	(2)
100	673											

[1] Distances for specified tests.
[2] Not applicable.

NOTE.—(a) Passenger cars: (b) vehicles other than passenger cars with GVWR of 10,000 lb or less; (c) vehicles other than passenger cars with GVWR greater than 10,000 lb.
(39 F.R. 25945—July 15, 1975)

TABLE III.—*Inoperative brake power assist and brake power units*

[Passenger cars]

Stop No.	Average deceleration, FPSPS: Col. 1 Brake power assist	Col. 2 Brake power unit	Equivalent stopping distance, feet: Col. 3 Brake power assist	Col. 4 Brake power unit
1	16	16	242	242
2	12	13	323	298
3	10	12	388	323
4	9	11	431	352
5	8	10	484	388
6	7.5	9.5	517	409
7	(Depleted) 7.0	9.0	554	431
8	N.A.	8.5	N.A.	456
9	N.A.	8.0	N.A.	484
10	N.A.	7.5	N.A.	517
11	N.A.	(Depleted) 7.0	N.A.	554

§ 571.121 Standard No. 121; Air Brake Systems.

S1 *Scope.* This standard establishes performance and equipment requirements for braking systems on vehicles equipped with air brake systems.

S2 *Purpose.* The purpose of this standard is to insure safe braking performance under normal and emergency conditions.

S3 *Application.* This standard applies to trucks, buses, and trailers equipped with air brake systems. However, it does not apply to a fire fighting vehicle manufactured before June 1, 1976, or a heavy hauler trailer manufactured before September 1, 1977, or to any vehicle manufactured before September 1, 1977, that has a gross axle weight rating (GAWR) for any axle of 24,000 pounds or more, two or more front steerable axles with a GAWR of 16,000 pounds or more for each axle, or that, in combination with another vehicle, constitutes a part of an "auto transporter" as defined in S4. In addition, the standard does not apply to any trailer whose unloaded vehicle weight is not less than 95 percent of its GVWR, or any vehicle that meets any one of criteria (a) through (d), as follows:

(a) An overall vehicle width of 108 inches or more;

(b) An axle that has a GAWR of 29,000 pounds or more;

(c) A speed attainable in 2 miles of not more than 33 mph; or

(d) (1) A speed attainable in 2 miles of not more than 45 mph; and

(2) An unloaded vehicle weight that is not less than 95 percent of the vehicle GVWR; and

(3) No passenger-carrying capacity.

S4 *Definitions.*

"Air brake system" means a system that uses air as a medium for transmitting pressure or force from the driver control to the service brake, but does not include a system that uses compressed air or vacuum only to assist the driver in applying muscular force to hydraulic or mechanical components.

"Antilock system" means a portion of a service brake system that automatically controls the degree of rotational wheel slip at one or more road wheels of the vehicle during braking.

"Heavy hauler trailer" means a trailer with one or more of the following characteristics:

(1) Its brake lines are designed to adapt to separation or extension of the vehicle frame; or

(2) Its body consists only of a platform whose primary cargo-carrying surface is not more than 40 inches above the ground in an unloaded condition, except that it may include sides that are designed to be easily removable and a permanent "front-end structure" as that term is used in § 393.106 of this title.

"Auto transporter" means a truck and a trailer designed for use in combination to transport motor vehicles, in that the towing vehicle is designed to carry cargo at a location other than the fifth wheel and to load this cargo only by means of the towed vehicle.

"Speed attainable in 2 miles" means the speed attainable by accelerating at maximum rate from a standing start for 2 miles on a level surface.

"Skid number" means the frictional resistance of a pavement measured in accordance with American Society for Testing and Materials Method E-274-65T at 40 m.p.h., omitting water delivery as specified in paragraph 7.1 of that method.

S5 *Requirements.* Each vehicle shall meet the following requirements under the conditions specified in S6.

S5.1 *Required equipment—trucks and buses.* Each truck and bus shall have the following equipment:

S5.1.1 *Air compressor.* An air compressor of sufficient capacity to increase air pressure in the supply and service reservoirs from 85 pounds per square inch (p.s.i.) to 100 p.s.i. when the engine is operating at the vehicle manufacturer's maximum recommended r.p.m. within a time, in seconds, determined by the quotient

$$\frac{\text{Actual reservoir capacity} \times 25}{\text{Required reservoir capacity}}.$$

S5.1.2 *Reservoirs.* One or more service reservoir systems, from which air is delivered to the brake chambers, and either an automatic condensate drain valve for each service reservoir or a supply reservoir between the service reservoir system and the source of air pressure.

S5.1.2.1 The combined volume of all service reservoirs and supply reservoirs shall be at least 12 times the combined volume of all service brake chambers at maximum travel of the pistons or diaphragms.

S5.1.2.2 Each reservoir shall be capable of withstanding an internal hydrostatic pressure of five times the compressor cutout pressure or 500 p.s.i., whichever is greater, for 10 minutes.

S5.1.2.3 Each service reservoir system shall be protected against loss of air pressure due to failure or leakage in the system between the service reservoir and the source of air pressure, by check valves or equivalent devices whose proper functioning can be checked without disconnecting any air line or fitting.

S5.1.2.4 Each reservoir shall have a condensate drain valve that can be manually operated.

S5.1.3 *Towing vehicle protection system.* If the vehicle is intended to tow another vehicle equipped with air brakes, a system to protect the air pressure in the towing vehicle from the effects of a loss of air pressure in the towed vehicle.

S5.1.4 *Pressure gauge.* A pressure gauge in each service brake system, readily visible to a person seated in the normal driving position, that indicates the service reservoir system air pressure. The accuracy of the gauge shall be within plus or minus 7 percent of the compressor cut-out pressure.

S5.1.5 *Warning signal.* A signal, other than a pressure gage, that gives a continuous warning to a person in the normal driving position when the ignition is in the "on" or "run" position and the air pressure in the service reservoir system is below 60 p.s.i. The signal shall be either visible within the driver's forward field of view, or both audible and visible.

S5.1.6 *Antilock warning signal.* A signal on each vehicle equipped with an antilock system that gives a continuous warning to a person in the normal driving position when the ignition is in the "on" or "run" position in the event of a total electrical failure of the antilock system. The signal shall be either visible within the driver's forward field of view or both audible, for a duration of at least 10 seconds, and continuously visible. The signal shall operate in the specified manner each time the ignition is returned to the "on" or "run" position.

S5.1.7 *Service brake stop lamp switch.* A switch that lights the stop lamps when the service brake control is statistically depressed to a point that produces a pressure of 6 p.s.i. or less in the service brake chambers.

S5.2 *Required equipment—trailers.* Each trailer shall have the following equipment:

S5.2.1 *Reservoirs.* One or more reservoirs to which the air is delivered from the towing vehicle.

S5.2.1.1 A reservoir shall be provided that is capable, when pressurized to 90 p.s.i., of releasing the vehicle's parking brakes at least once and that is unaffected by a loss of air pressure in the service brake system.

S5.2.1.2 Total service reservoir volume shall be at least eight times the combined volume of all service brake chambers at maximum travel of the pistons or diaphragms.

S5.2.1.3 Each reservoir shall be capable of withstanding an internal hydrostatic pressure of 500 p.s.i. for 10 minutes.

S5.2.1.4 Each reservoir shall have a condensate drain valve that can be manually operated.

S5.2.1.5 Each service reservoir shall be protected against loss of air pressure due to failure or leakage in the system between the service reservoir and its source of air pressure by check valves or equivalent devices.

S5.3 *Service brakes—road tests.* The service brake system on each truck and bus shall, under the conditions of S6.1, meet the requirements of S5.3.1, S5.3.3, and S5.3.4 when tested without adjustments other than those specified in this standard. The service brake system on each trailer shall, under the conditions of S6.1, meet the requirements of S5.3.2, S5.3.3, and S5.3.4 when tested without adjustments other than those specified in this standard. However, the truck and trailer portions of an auto transporter (if both are manufactured after September 1, 1976), shall, in combination, meet the requirements of S5.3.1 as they apply to a single unit truck or bus, in place of the requirements of S5.3.2 as they apply to the trailer portion, and in place of the requirements of S5.3.1 as they apply to the truck portion in the loaded condition.

S5.3.1 *Stopping distance—trucks and buses.* Except for a bus manufactured before January 1, 1977, and except as provided in S5.3.1.2 and S5.3.1.3, when stopped six times for each combination of weight, speed, and road condition specified in S5.3.1.1, in the sequence specified in Table I, the vehicle shall stop at least once in not more than the distance specified in Table II, measured from the point at which movement of the service brake control begins, without any part of the vehicle leaving the roadway and without lockup of any wheel at speeds above 10 mph except for:

(a) Controlled lockup of wheels allowed by an antilock system, or

(b) Lockup of wheels on nonsteerable axles other than the two rearmost nonliftable, nonsteerable axles on a vehicle with more than two nonsteerable axles.

TABLE I—STOPPING SEQUENCE

1. Burnish.
2. Control trailer service brake stops at 60 mi/h (for truck-tractors tested with a control trailer in accordance with S6.1.10.6).
3. Control trailer emergency brake stops at 60 mi/h (for truck-tractors tested with a control trailer in accordance with S6.1.10.7).
4. Stops with vehicle at gross vehicle weight rating:
(a) 20 mi/h service brake stops on skid number of 75.
(b) 60 mi/h service brake stops on skid number of 75.
(c) 20 mi/h service brake stops on skid number of 30.
(d) 20 mi/h emergency brake stops on skid number of 75.
(e) 60 mi/h emergency brake stops on skid number of 75.
5. Parking brake test with vehicle loaded to gross vehicle weight rating.
6. Stops with vehicle at unloaded weight plus 500 lb:
(a) 20 mi/h service brake stops on skid number of 75.
(b) 60 mi/h service brake stops on skid number of 75.
(c) 20 mi/h service brake stops on skid number of 30.
(d) 20 mi/h emergency brake stops on skid number of 75.
(e) 60 mi/h emergency brake stops on skid number of 75.
7. Parking brake test with vehicle at unloaded weight plus 500 lb.

S5.3.1.1 Stop the vehicle from 60 m.p.h. and 20 m.p.h. on a surface with a skid number of 75, and from 20 m.p.h. on a wet surface with a skid number of 30, with the vehicle (a) loaded to its gross vehicle weight rating, and (b) at its unloaded vehicle weight plus 500 pounds (including driver and instrumentation). If the speed attainable in 2 miles is less than 60 m.p.h., the vehicle shall stop from a speed in Table II that is 4 to 8 m.p.h. less than the speed attainable in 2 miles.

S5.3.1.2 When stopped in accordance with S5.3.1, with its brakes fully applied, a truck manufactured before September 1, 1977, that has a front steerable non-driving axle with a GAWR of 16,000 pounds or more, or a front steerable drive axle with a GAWR of less than 18,000 pounds, and a truck manufactured before September 1, 1975, that has a front steerable drive axle of any GAWR, need not meet the requirement that it stop in the distance specified in Table II for stops on a surface with a skid number of 75 if the brakes on its front axle conform to the retardation formula and Column 1 values of S5.4.1. These vehicles must nevertheless meet the requirements of staying within the 12-foot lane and those relating to wheel lock-up.

TABLE II.—*Stopping distance in feet*

Vehicle speed in miles per hour	Service brake		Emergency brake, skid No. 75	
	Skid No. 75	Skid No. 30		
	(1)	(2)	(3)	(4)
20	35	60	83	85
25	53	----------	123	131
30	75	----------	170	180
35	101	----------	225	250
40	131	----------	288	325
45	165	----------	358	400
50	203	----------	435	504
55	246	----------	520	608
60	293	----------	613	720

S5.3.2 *Stopping capability — trailers.* When tested at each combination of weight, speed, and road condition specified in S5.3.2.1, in the sequence specified in Table I, with air pressure of 90 p.s.i. in the control line and service reservoir system and with no application of the towing vehicle's brakes, a trailer shall stop without any part of the trailer leaving the roadway and without lockup of any wheel at speeds above 10 mph, except for

(a) Controlled lockup of wheels allowed by an antilock system, or

(b) Lockup of wheels on nonsteerable axles other than the two rearmost nonliftable, nonsteerable axles on a trailer with more than two nonsteerable axles.

S5.3.2.1 Stop the vehicle from 60 m.p.h. and 20 m.p.h. on a surface with skid number of 75, and from 20 m.p.h. on a wet surface with a skid number of 30, with the vehicle (a) loaded to its gross vehicle weight rating, and (b) at its unloaded vehicle weight plus 500 pounds (including instrumentation).

S5.3.3 *Brake actuation time.* With an initial service reservoir system air pressure of 100 psi, the air pressure in each brake chamber shall, when measured from the first movement of the service brake control, reach 60 psi in not more than 0.45 seconds in the case of trucks and buses, 0.35 seconds in the case of trailer converter dollies, and 0.30 seconds in the case of trailers other than trailer converter dollies. A vehicle designed to tow a vehicle equipped with air brakes shall be capable of meeting the above actuation time requirement with a 50-cubic-inch test reservoir connected to the control line coupling. A trailer, including a trailer converter dolly, shall meet the above actuation time requirement with its brake system connected to the test rig shown in Figure 1.

S5.3.4 *Brake release time.* With an initial service brake chamber air pressure of 95 psi, the air pressure in each brake chamber shall, when measured from the first movement of the service brake control, fall to 5 psi in not more than 0.55 seconds in the case of trucks and buses, and fall to 5 psi in not more than 0.65 seconds in the case of trailers, including trailer converter dollies. A vehicle designed to tow another vehicle equipped with air brakes shall be capable of meeting the above release time requirement with a 50-cubic-inch test reservoir connected to the control line coupling. A trailer, including a trailer converter dolly, shall meet the above release time requirements with its brake system connected to the test rig shown in Figure 1.

FIGURE 1

TRAILER TEST RIG

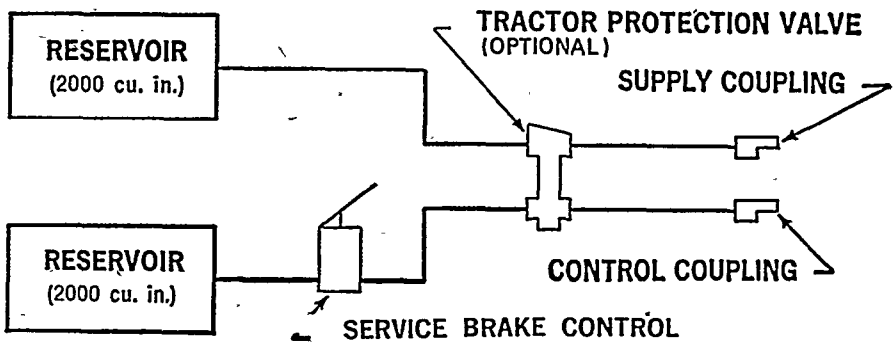

S5.4 *Service brake system—dynamometer tests.* When tested without prior road testing, under the conditions of S6.2, each brake assembly shall meet the requirements of S5.4.1, S5.4.2, and S5.4.3 when tested in sequence and without adjustments other than those specified in the standard. For purposes of the requirements of S5.4.2 and S5.4.3, an average deceleration rate is the change in velocity divided by the deceleration time measured from the onset of deceleration.

S5.4.1 *Brake retardation force.* The sum of the retardation forces exerted by the brakes on each vehicle designed to be towed by another vehicle equipped with air brakes shall be such that the quotient

$$\frac{\text{sum of the brake retardation forces}}{\text{sum of GAWR's}}$$

relative to brake chamber air pressure, shall have values not less than those shown in Column 1 of Table III. Retardation force shall be determined as follows:

TABLE III

BRAKE RETARDATION FORCE

Brake retardation force, GAWR Col. 1	Brake chamber pressure, psi, Col. 2
0.05	20
0.12	30
0.18	40
0.25	50
0.31	60
0.37	70
0.41	80

S5.4.1.1 After burnishing the brake pursuant to S6.2.6, retain the brake assembly on the inertia dynamometer. With an initial brake temperature between 125° F. and 200° F., conduct a stop from 50 m.p.h., maintaining brake chamber air pressure at a constant 20 p.s.i. Measure the average torque exerted by the brake from the time the specified air pressure is reached until the brake stops and divide by the static loaded tire radius specified by the tire manufacturer to determine the retardation force. Repeat the procedure six times, increasing the brake chamber air pressure by 10 p.s.i. each time. After each stop, rotate the brake drum or disc until the temperature of the brake falls to between 125° F. and 200° F.

S5.4.2 *Brake power.* When mounted on an inertia dynamometer, each brake shall be capable of making 10 consecutive decelerations at an average rate of 9 f.p.s.p.s. from 50 m.p.h. to 15 m.p.h., at equal intervals of 72 seconds, and shall be capable of decelerating to a stop from 20 m.p.h. at an average deceleration rate of 14 f.p.s.p.s. 1 minute after the 10th deceleration. The series of decelerations shall be conducted as follows:

S5.4.2.1 With an initial brake temperature between 150° F. and 200° F. for the first brake application, and the drum or disc rotating at a speed equivalent to 50 m.p.h., apply the brake and decelerate at an average deceleration rate of 9 f.p.s.p.s. to 15 m.p.h. Upon reaching 15 m.p.h., accelerate to 50 m.p.h. and apply the brake for a second time 72 seconds after the start of the first application. Repeat the cycle until 10 decelerations have been made. The service line air pressure shall not exceed 100 p.s.i. during any deceleration.

S5.4.2.2 One minute after the end of the last deceleration required by S5.4.2.1 and with the drum or disc rotating at a speed of 20 m.p.h., decelerate to a stop at an average deceleration rate of 14 f.p.s.p.s.

S5.4.3 *Brake recovery.* Starting 2 minutes after completing the tests required by S5.4.2, the brake of a vehicle other than either front axle brake of a truck-tractor shall be capable of making 20 consecutive stops from 30 mph at an average deceleration rate of 12 ft/s/s, at equal intervals of 1 minute measured from the start of each brake application. The service line air pressure needed to attain a rate of 12 ft/s/s shall be not more than 85 lb/in², and not less than 20 lb/in² for a brake not subject to the control of an antilock system, or 12 lb/in² for brake subject to the control of an antilock system.

S5.5 *Antilock system.*

S5.5.1 *Antilock system failure.* On a vehicle equipped with an antilock system, electrical failure of any part of the antilock system shall not increase the actuation and release times of the service brakes.

S5.5.2 *Antilock system power—trailers.* On a trailer equipped with an antilock system that requires electrical power for operation, the power shall be obtained from the stop lamp circuit. Additional circuits may also be used to obtain redundant sources of electrical power.

S5.6 *Parking brake system.* Each vehicle other than a trailer converter dolly shall have a parking brake system that under the conditions of S6.1 meets the requirements of S5.6.1 or S5.6.2, at the manufacturer's option, and the require-

ments of S5.6.3 and S5.6.4. However, a trailer manufactured before June 30, 1976, that is designed to transport bulk agricultural commodities in off-road harvesting sites and to a processing plant or storage location, as evidenced by skeletal construction that accommodates harvest containers, a maximum length of 28 feet, and an arrangement of air control lines and reservoirs that minimizes damage in field operations, shall meet the requirements of this section or, at the option of the manufacturer, the requirements of § 393.43 of this title.

S5.6.1 *Static retardation force.* With all other brakes rendered inoperative, during a static drawbar pull in a forward or rearward direction, the static retardation force produced by the application of the parking brakes shall be:

(a) In the case of a vehicle other than a truck-tractor that is equipped with more than two axles, such that the quotient

$$\frac{\text{static retardation force}}{\text{GAWR}}$$

is not less than 0.28 for any axle other than a steerable front axle; and

(b) In the case of a truck-tractor that is equipped with more than two axles, such that the quotient

$$\frac{\text{static retardation force}}{\text{GVWR}}$$

is not less than 0.14.

S5.6.2 *Grade holding.* With all parking brakes applied, the vehicle shall remain stationary facing uphill and facing downhill on a smooth, dry portland cement concrete roadway with a 20-percent grade, both (a) when loaded to its gross vehicle weight rating, and (b) at its unloaded vehicle weight plus 500 pounds (including driver and instrumentation).

S5.6.3 *Application and holding.* The parking brakes shall be applied by an energy source that is not affected by loss of air pressure or brake fluid pressure in the service brake system. Once applied, the parking brakes shall be held in the applied position solely by mechanical means.

S5.6.4 *Parking brake control—trucks and buses.* The parking brake control shall be separate from the service brake control. It shall be operable by a person seated in the normal driving position. The control shall be identified in a manner that specifies the method of control operation. The parking brake control shall control the parking brakes of the vehicle and of any air braked vehicle that it is designed to tow.

S5.7 *Emergency brake system-trucks and buses.* Each vehicle shall be equipped with an emergency brake system which, under the conditions of S6.1, conforms to the requirements of S5.7.1 through S5.7.3. The emergency brake system may be a part of the service brake system or incorporate portions of the service brake and parking brake systems.

S5.7.1 *Emergency brake system performance.* When stopped six times for each combination of weight and speed specified in S5.3.1.1 on a road surface with a skid number of 75 with a single failure in the service brake system of a part designed to contain compressed air or brake fluid (except failure of a common valve, manifold, brake fluid housing, or brake chamber housing), the vehicle shall stop at least once in not more than the distance specified in Column 3 of Table II, measured from the point at which movement of the service brake control begins, without any part of the vehicle leaving the roadway, except that a truck-tractor tested at its unloaded vehicle weight plus 500 pounds shall stop at least once in not more than the distance specified in Column 4 of Table II.

S5.7.2 *Emergency brake system operation.* The emergency brake system shall be applied and released, and be capable of modulation, by means of the service brake control.

S5.7.3 *Towing vehicle emergency brake requirements.* In addition to meeting the other requirements of S5.7, a vehicle designed to tow another vehicle equipped with air brakes shall—

(a) In the case of a truck-tractor in the unloaded condition and a single unit truck which is capable of towing an air-brake equipped vehicle and is loaded to gross vehicle weight rating, be capable of meeting the requirements of S5.7.1 by operation of the service brake control only, with the trailer air supply line and air control line from the towing vehicle vented to the atmosphere in accordance with S6.1.14;

(b) In the case of a truck-tractor loaded to gross vehicle weight rating, be capable of meeting S5.7.1 by operation of the service brake control only, with the air control line from the towing vehicle vented to the atmosphere in accordance with S6.1.14; and

(c) Be capable of modulating the air in the supply or control line to the trailer by means of the service brake control with a single failure in the towing vehicle service brake system as specified in S5.7.1.

S5.8 *Emergency braking capability—trailers.* Each trailer other than a trailer converter dolly shall have a parking brake system that conforms to S5.6 and that applies with the force specified in S5.6.1 or S5.6.2 when the air pressure in the supply line is at atmospheric pressure. A trailer converter dolly shall have, at the manufacturer's option, (a) a parking brake system that conforms to S5.6 and that applies with the force specified in S5.6.1 or S5.6.2 when the air pressure in the supply line is at atmospheric pressure, or (b) an emergency system that automatically controls the service brakes when the service reservoir is at any pressure above 20 lb/in^2 and the supply line is at atmospheric pressure. However, a trailer manufactured before June 30, 1976, that is designed to transport bulk agricultural commodities in off-road harvesting sites and to a processing plant or storage location, as evidenced by skeletal construction that accommodates harvest containers, a maximum length of 28 feet, and an arrangement of air control lines and reservoirs that minimizes damage in field operations, shall meet the requirements of this section or, at the option of the manufacturer, the requirements of § 393.43 of this title.

S6 *Conditions.* The requirements of S5 shall be met under the following conditions. Where a range of conditions is specified, the vehicle must be capable of meeting the requirements at all points within the range.

S6.1 *Road test conditions.*

S6.1.1 Except as otherwise specified the vehicle is loaded to its gross vehicle weight rating, distributed proportionately to its gross axle weight ratings.

S6.1.2 The inflation pressure is as specified by the vehicle manufacturer for the gross vehicle weight rating.

S6.1.3 Unless otherwise specified, the transmission selector control is in neutral or the clutch is disengaged during all decelerations and during static parking brake tests.

S6.1.4 All vehicle openings (doors, windows, hood, trunk, cargo doors, etc.) are in a closed position except as required for instrumentation purposes.

S6.1.5 The ambient temperature is between 32° F. and 100° F.

S6.1.6 The wind velocity is zero.

S6.1.7 Stopping tests are conducted on a 12-foot wide level roadway having a skid number of 75, unless otherwise specified. The vehicle is alined in the center of the roadway at the beginning of a stop.

S6.1.8 The brakes on a vehicle manufactured before September 1, 1976, are burnished before testing, at the manufacturer's option, in accordance with S6.1.8.1 or S6.1.8.2. The brakes on a vehicle manufactured on or after September 1, 1976, are burnished before testing in accordance with S6.1.8.1. However, for vehicles with parking brake systems not utilizing the service brake friction elements, burnish the friction elements of such systems prior to the parking brake test according to the manufacturer's recommendations.

S6.1.8.1 With the transmission in the highest gear appropriate for the series given in Table IV make 500 brake applications at a deceleration rate of 10 ft/s/s, or at the vehicle's maximum deceleration rate, if less than 10 ft/s/s, in the sequence specified in Table IV. After each brake application, accelerate to the speed specified and maintain that speed until making the next brake application at a point 1 mile from the initial point of the previous brake application. If a vehicle cannot attain the specified speed in 1 mile, continue to accelerate until the specified speed is reached or until the vehicle has traveled 1.5 miles from the initial point of the previous brake application. If during any of the brake applications specified in Table IV, the hottest brake reaches 500°F, make the remainder of the 500 applications from that snub condition except that a higher or lower snub condition shall be used as necessary to maintain an after-stop temperature of 500°F.±50°F. Any automatic pressure limiting valve is in use to limit pressure as designed, except that any automatic front axle pressure limit-

ing valve is bypassed if the temperature of the hottest brake on a rear axle exceeds the temperature of the hottest brake on a front axle by more than 125° F. A bypassed valve is reconnected if the temperature of the hottest brake on a front axle exceeds the temperature of the hottest brake on a rear axle by 100°F. After burnishing; adjust the brakes as recommended by the vehicle manufacturer.

TABLE IV

Series	Snubs	Snub conditions (highest speed specified in miles per hour)
1	175	40-20
2	25	45-20
3	25	50-20
4	25	55-20
5	250	60-20

S6.1.8.2 With the transmission in the highest gear range appropriate for 40 mph, make 400 brake applications from 40 mph to 20 mph at 10 ft/s/s. After each brake application accelerate to 40 mph and maintain that speed until making the next application at a point 1.5 miles from the point of the previous brake application. After burnishing, adjust the brakes as recommended by the vehicle manufacturer.

S6.1.9 Static parking brake tests for a semitrailer are conducted with the front-end supported by an unbraked dolly. The weight of the dolly is included as part of the trailer load.

S6.1.10 In a test other than a static parking brake test, a truck-tractor manufactured before September 1, 1976, is tested at its gross vehicle weight rating by loading it without a trailer or, at the manufacturer's option, by coupling it to a flatbed semitrailer (hereafter, control trailer) as specified in S6.1.10.1 to S6.1.10.7. In a test other than a static parking brake test, a truck-tractor manufactured on or after September 1, 1976, is tested at its gross vehicle weight rating by coupling it to a control trailer as specified in S6.1.10.1 to S6.1.10.7.

S6.1.10.2 The center of gravity of the to this standard.

S6.1.10.2 The center of gravity of the loaded control trailer is on the trailer's longitudinal centerline at a height of 66 ± 3 in. above the ground.

S6.1.10.3 For a truck-tractor with a rear axle gross axle weight rating of 26,000 lb or less, the control trailer has a single axle with a gross axle weight rating of 18,000 lb and a length, measured from the transverse centerline of the axle to the centerline of the kingpin, of 258±6 in.

S6.1.10.4 For a truck-tractor with a total rear axle gross axle weight rating of more than 26,000 lb the control trailer has a tandem axle with a combined gross axle weight rating of 32,000 lb and a length, measured from the transverse centerline between the axles to the centerline of the kingpin, of 390±6 in.

S6.1.10.5 The control trailer is loaded so that its axle is loaded to its gross axle weight rating and the tractor is loaded to its gross vehicle weight rating, with the tractor's fifth wheel adjusted so that the load on each axle measured at the tire-ground interface is most nearly proportional to the axles' respective gross axle weight ratings.

S6.1.10.6 *Test equipment specification.* The control trailer's service brakes are capable of stopping the combination from the maximum speed at which the tractor is tested, under the conditions of S6.1, without assistance from the tractor brakes, in the distance found by multiplying the value 68, 90, 115, 143, 174, 208, or 245 (corresponding to a speed of 30, 35, 40, 45, 50, 55, or 60 mph as appropriate for the truck-tractor tested) by the ratio:

$$\frac{\text{weight on all axles of combination}}{\text{weight on trailer axles}}$$

with the tractor's fifth wheel adjusted as specified in S6.1.10.5, the trailer service reservoirs pressurized to 100 lb/in², and the trailer loaded so that its axle is at gross axle weight rating and its kingpin is at empty vehicle weight. The stopping distance is measured from the point at which movement of the valve controlling the trailer brakes begins. The service brake chambers on the trailer reach 60 lb/in² in not less than 0.20 second and not more than 0.30 second, measured from the instant at which movement of the valve controlling the trailer brakes begins.

S6.1.10.7 *Test equipment specification.* The control trailer's emergency brakes are capable of stopping the combination under the conditions of S6.1 from the maximum speed at which the tractor is tested, without assistance from the tractor's brakes, in the distance found by multiplying the emergency brake stopping distance in column 3 of table II by the ratio:

$$\frac{\text{weight on all axles of combination}}{\text{weight on trailer axles}}$$

with the combination loaded in accordance with S6.1.10.5. Stopping distance is measured from the point at which movement of the valve controlling the trailer brakes begins. The pressure in trailer brakes begins. In the case of control trailers that utilize parking brakes for emergency stopping capability, the pressure in the trailer's spring parking brake chambers falls from 95 lb/in² to 5 lb/in² in not less than 0.50 second and not more than 0.60 second, measured from the instant at which movement of the valve controlling the trailer's spring parking brakes begins.

S6.1.11 *Special drive conditions.* A vehicle equipped with an interlocking axle system or a front wheel drive system that is engaged and disengaged by the driver is tested with the system disengaged.

S6.1.12 *Liftable axles.* A vehicle with a liftable axle is tested at gross vehicle weight rating with the liftable axle down and at unloaded vehicle weight with the liftable axle up.

S6.1.13 After September 1, 1975, the trailer test rig shown in Figure 1 is capable of increasing the pressure in a 50 cubic inch reservoir from atmospheric to 60 lb/in² in 0.06 second, measured from the first movement of the service brake control to apply service brake pressure and of releasing pressure in such a reservoir from 95 to 5 lb/in² in 0.22 second measured from the first movement of the service brake control to release service brake pressure.

S6.1.14 In testing the emergency braking system of towing vehicles under S5.7.3(a) and S5.7.3(b), the hose(s) is vented to the atmosphere at any time not less than 1 second and not more than 1 minute before the emergency stop begins, while the vehicle is moving at the speed from which the stop is to be made and any manual control for the towing vehicle protection system is in the position to supply air and brake control signals to the vehicle being towed. No brake application is made from the time the line(s) is vented until the emergency stop begins and no manual operation of the parking brake system or towing vehicle protection system occurs from the time the line(s) is vented until the stop is completed.

S6.2 *Dynamometer test conditions.*

S6.2.1 The dynamometer inertia for each wheel is equivalent to the load on the wheel with the axle loaded to its gross axle weight rating.

S6.2.2 The ambient temperature is between 75° F. and 100° F.

S6.2.3 Air at ambient temperature is directed uniformly and continuously over the brake drum or disc at a velocity of 2,200 feet per minute.

S6.2.4 The temperature of each brake is measured by a single plug-type thermocouple installed in the center of the lining surface of the most heavily loaded shoe or pad as shown in Figure 2. The thermocouple is outside any center groove.

FIGURE 2
THERMOCOUPLE INSTALLATION

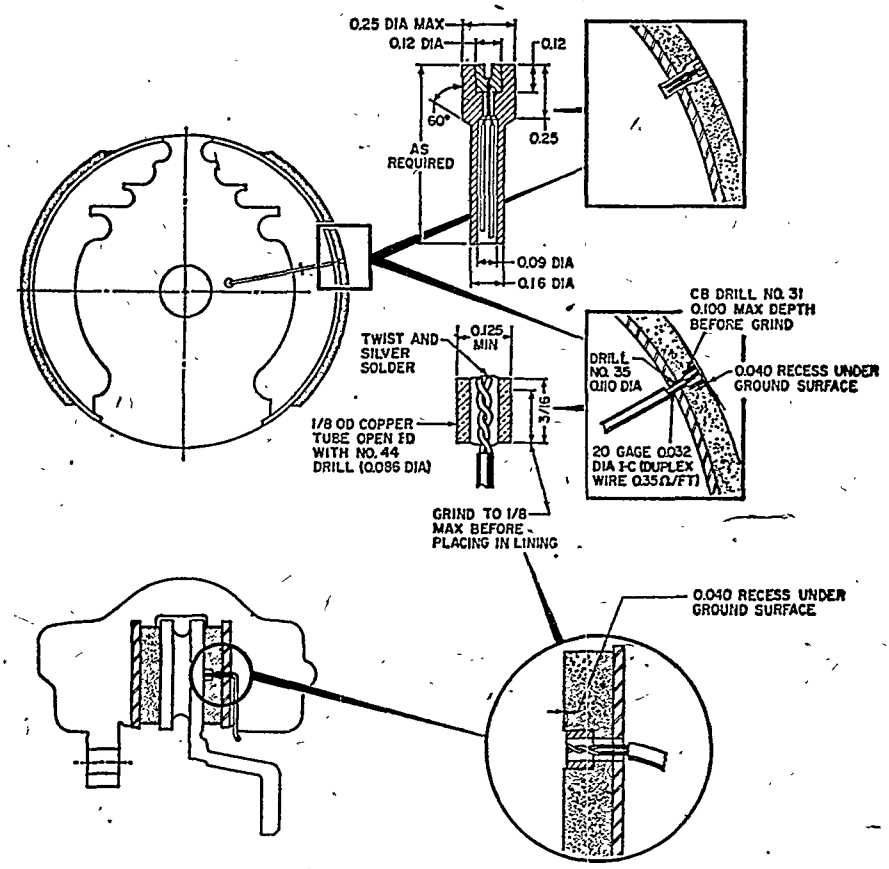

S6.2.5 The rate of brake drum or disc rotation on a dynamometer corresponding to the rate of rotation on a vehicle at a given speed is calculated by assuming a tire radius equal to the static loaded radius specified by the tire manufacturer.

S6.2.6 Brakes are burnished before testing as follows: Place the brake assembly on an inertia dynamometer and adjust the brake as recommended by the brake manufacturer. Make 200 stops from 40 m.p.h. at a deceleration of 10 f.p.s.p.s., with an initial brake temperature on each stop of not less than 315° F. and not more than 385° F. Make 200 additional stops from 40 m.p.h. at a deceleration of 10 f.p.s.p.s. with an initial brake temperature on each stop of not less than 450° F. and not more than 550° F. After burnishing, the brakes are adjusted as recommended by the brake manufacturer.

S6.2.7 The brake temperature is increased to a specified level by conducting one or more stops from 40 m.p.h. at a deceleration of 10 f.p.s.p.s. The brake temperature is decreased to a specified level by rotating the drum or disc at a constant 30 m.p.h.

EFFECTIVE DATE NOTE:

1. The provisions of S5.7 above become effective September 1, 1976. For the convenience of the user, the superseded text is set forth below:

S5.7 *Emergency braking capability—trucks and buses.* Each truck and bus shall have a braking system with emergency braking capability that meets the requirements of S5.7.1, or, at the manufacturer's option, the requirements of S5.7.2.

S5.7.1 *Parking brake system with automatic application.* Each vehicle shall have a parking brake system acting on each axle, except steerable front axles, that conforms to S5.6 and that meets the following requirements:

S5.7.1.1 *Automatic application.* The parking brakes shall be automatically applied and the supply line to any towed vehicle vented to atmospheric pressure when the air pressure in all service revervoirs is less than the automatic application pressure level. The automatic application pressure level shall be between 20 and 45 p.s.i.

S5.7.1.2 *Automatic braking performance.* With the parking brake automatically applied, a vehicle shall either be capable of meeting the requirements of S5.7.2.3, with distances measured from the point of automatic application, or shall have a static retardation force quotient not greater than 0.40 for any axle, determined in accordance with S5.6.1.

S5.7.1.3 *Release after automatic application.* After automatic application, the parking brakes shall be releasable at least once by means of a parking brake control. The parking brakes shall be releasable only if they can be automatically reapplied and exert the force required by S5.6 immediately after release.

S5.7.1.4 *Manual operation.* The parking brakes shall be manually operable and releasable when the air pressure in the service reservoir system is sufficient to keep the parking brakes from automatically applying.

S5.7.2 *Modulated emergency braking system.* Each vehicle that does not have a parking brake system that is automatically applied in the event of air pressure loss shall have a parking brake system conforming to S5.6 that is capable of manual application at any reservoir system pressure level, and shall have an emergency braking system that meets the following requirements.

S5.7.2.1 *Emergency braking control.* The emergency braking system shall be controlled by the service brake control or the parking brake control. The control for the emergency braking system shall control the brakes on any towed vehicle equipped with air brakes.

S5.7.2.2 *Emergency braking system failure.* In the event of a failure of a valve, manifold, brake fluid housing, or brake chamber housing that is common to the service brake and emergency braking systems, loss of air shall not cause the parking brake to be inoperable.

S5.7.2.3 *Emergency braking stopping distance.* Except as specified in S5.7.2.3.1 and S5.7.2.3.2, when stopped six times for each combination of weight and speed specified in S5.3.1.1 on a road surface with a skid number of 75, with a single failure in the service brake system of a part designed to contain compressed air or brake fluid (except failure of a common valve, manifold, brake fluid housing, or brake chamber housing), the vehicle shall stop at least once in not more than the distance specified in column 3 of Table II, measured from the point at which movement of the brake control begins, without any part of the vehicle leaving the roadway, except that a truck-tractor tested at its unloaded vehicle weight plus 500 pounds shall stop at least once in not more than the distance specified in Column 4 of Table II.

S5.7.2.3.1 A truck manufactured before September 1, 1976, that has a front steerable non-driving axle with a GAWR of 16,000 pounds or more, or a front steerable drive axle with a GAWR of less than 18,000 pounds, and a truck manufactured before September 1, 1975, that has a front steerable drive axle of any GAWR, must stop in accordance with S5.7.2.3 without any part of the vehicle leaving the roadway, but need not stop in the distances specified.

S5.7.2.3.2 When stopped in accordance with S5.7.2.3, a truck or bus manufactured before September 1, 1975, other than a truck described in S5.7.2.3.1, shall stop at least once for each speed and weight condition on a surface with a skid number of 75 in not more than the distance specified in Table IIa instead of meeting the stopping distances specified in Table II for stops on a surface with a skid number of 75.

EFFECTIVE DATE NOTE 2: New paragraph S6.1.14 above becomes effective September 1, 1976.

[FR Doc.76-20623 Filed 7-16-76;8:45 am]

proposed rules

This section of the FEDERAL REGISTER contains notices to the public of the proposed issuance of rules and regulations. The purpose of these notices is to give interested persons an opportunity to participate in the rule making prior to the adoption of the final rules.

DEPARTMENT OF HEALTH, EDUCATION, AND WELFARE

Food and Drug Administration

[21 CFR Part 207]

[Docket No. 76P-0104]

DRUG LISTING

Expanded Use of Code Designations

The Food and Drug Administration (FDA), having been petitioned by Parke, Davis & Co., Detroit, MI, is proposing to amend the regulations implementing the Drug Listing Act of 1972 to permit the National Drug Code (NDC) number to appear as part of and contiguous to the Universal Product Code (UPC) symbol for all drug products, under certain conditions. Interested persons have until September 17, 1976, to submit comments.

The Commissioner of Food and Drugs issued, in the FEDERAL REGISTER of November 7, 1975 (40 FR 52000), a regulation revising § 207.35(b) (3) (i) (21 CFR 207.35(b) (3) (i)) to permit the NDC number to appear as part of and contiguous to the UPC symbol wherever the symbol appears on consumer packages for over-the-counter (OTC) drug products. In its petition dated March 11, 1976, Parke, Davis & Co., requested that § 207.35(b) (3) (i) be revised to permit the use of the NDC number in association with the UPC symbol for prescription drug products as well as for OTC drug products. The petition acknowledged that the UPC system was originally designed to apply to consumer products that pass over supermarket checkout counters. The petition stated that Parke, Davis & Co. is considering the use in its manufacturing operations of a UPC-type symbol on its prescription products to verify labeling, cartons, and packers. It would similarly use such a symbol to inventory cartons and packers in its distribution centers. The petition added that the current regulation does not permit this use of the UPC symbol, although such use represents an advancement in product labeling control.

The petition further noted that the proposed current good manufacturing practice regulations, published in the FEDERAL REGISTER of February 13, 1976 (41 FR 6878), permit the use of electronic-checking devices (§ 211.2(a) (21 CFR 211.2(a))); however, it suggested that § 207.35(b) (3) (i) conflicts with the policy stated in the proposed current good manufacturing practice regulations because it restricts the use of electronic-scanning devices to a small proportion of the products manufactured by the pharmaceutical industry.

A copy of the petition has been placed on public display at the office of the Hearing Clerk, Food and Drug Administration, Rm. 4-65, 5600 Fishers Lane, Rockville, MD 20852, and may be seen Monday through Friday from 9 a.m. to 4 p.m. except on Federal legal holidays.

The Commissioner has reviewed the petition and agrees to the suggestion that the NDC number be permitted to appear as part of and contiguous to the UPC symbol for prescription drug products as well as for OTC drug products, provided that the symbol appears prominently on the immediate container and any outside container or wrapper and in a conspicuous location, but in no event shall the NDC number appear on the natural bottom of a container or wrapper. The placement of the NDC number as part of, and contiguous to, the UPC symbol is in lieu of placing it in the top third of the label. The Commissioner therefore is proposing to revise § 207.35(b) (3) (i) to permit the NDC number to appear as requested.

The Commissioner advises that 21 CFR Part 207 does not prohibit the use of the UPC symbol on the label or in the labeling of prescription drug products. Under current regulations, the NDC number and the UPC symbol may appear on the label of a prescription drug product; however, the NDC number must be placed prominently in the top third of the principal display panel of both the immediate container and any outside container or wrapper. Section 207.35(b) (3) (i) merely authorizes explicitly the manufacturer to include the NDC number as part of and contiguous to the UPC symbol for OTC drug products in lieu of placing the NDC number in the top third of the label. Therefore, the Commissioner concludes that § 207.35(b) (3) (i) does not conflict with the policy stated in the proposed current good manufacturing practice regulations regarding use of electronic-scanning devices for prescription drug products.

The Commissioner has carefully considered the inflation impact of the proposed regulation as required by Executive Order 11821, OMB Circular A-107, and the Guidelines issued by the Department of Health, Education, and Welfare; no major inflation impact has been found. A copy of the FDA Inflation Impact Assessment is on file with the Hearing Clerk, Food and Drug Administration.

Therefore, under the Federal Food, Drug, and Cosmetic Act (secs. 201, 502, 505, 506, 507, 510, 512, 701(a), 704, 52 Stat. 1040-1042 as amended, 1050-1053 as amended, 1055, 55 Stat. 851, 59 Stat. 463 as amended, 67 Stat. 477 as amended, 76 Stat. 794-795 as amended, 82 Stat. 343-351 (21 U.S.C. 321, 352, 355, 356, 357, 360, 360b, 371(a), 374)); the Public Health Service Act (sec. 351, 58 Stat. 702 as amended (42 U.S.C. 262)); and the Drug Listing Act of 1972 (Pub. L. 92-387 (86 Stat. 559-562)) and under authority delegated to him (21 CFR 5.1) (recodification published in the FEDERAL REGISTER of June 15, 1976 (41 FR 24262)), the Commissioner proposes that Part 207 be amended by revising § 207.35(b) (3) (i) to read as follows:

§ 207.35 Notification of registrant; drug establishment registration number and drug listing number.

* * * * *

(b) * * *

(3) * * *

(i) The NDC number shall be placed prominently in the top third of the principal display panel of the label of both the immediate container and of any outside container or wrapper. In lieu of placement of the NDC number in the top third of the label, the NDC number may appear as part of and contiguous to the UPC (Universal Product Code) symbol for any drug product if such symbol appears prominently on the immediate container and any outside container or wrapper and in a conspicuous location, but in no event on the natural bottom of a container or wrapper. The term "principal display panel," as used in this paragraph, means that part of a label that is most likely to be displayed, presented, shown, or examined under customary conditions of display to the consumer (for over-the-counter drug products) or to the dispenser (for prescription drug products).

Interested persons may, on or before September 17, 1976, submit to the Hearing Clerk, Food and Drug Administration, Rm. 4-65, 5600 Fishers Lane, Rockville, MD 20852, written comments (preferably in quintuplicate and identified with the Hearing Clerk docket number found in brackets in the heading of this document) regarding this proposal. Received comments may be seen in the above office during working hours, Monday through Friday.

Dated: July 14, 1976.

WILLIAM L. RANDOLPH,
Acting Associate Commissioner for Compliance.

[FR Doc.76-20712 Filed 7-16-76;8:45 am]

CIVIL AERONAUTICS BOARD

[14 CFR Parts 249, 378b, 389]

[EDR-300A, SPDR-45A, ODR-13A; Docket 28404; Dated July 13, 1976]

CONTRACT BULK INCLUSIVE TOURS

Supplemental Notice of Proposed Rulemaking

By EDR-300/SPDR-45/ODR-13, 41 FR 24903, June 21, 1976, the Board asked for public comments to be filed by

July 21, 1976 on its proposal to establish a new form of bulk tours to be called contract bulk inclusive tours (CBIT's). Reply comments were to be filed by August 5, 1976.

By letter dated July 9, 1976, the member carriers of the National Air Carrier Association (NACA) have requested that these dates be extended for three weeks. In support of their request, the NACA members assert that the time allowed for public comments is insufficient for the coordination of the views of the NACA members concerning the many complexities of the Board's proposal and the preparation of carefully considered comments for the Board's consideration.

According to the NACA letter, counsel for Eastern Air Lines, Inc., one of the proponents of CBIT's, has no objection to the grant of the request but counsel for Pan American World Airways, Inc. (Pan American), the second proponent of CBIT's objects to any extension in excess of one week.

On consideration of the foregoing, it appears that the requested extension is warranted and should be granted. The matters raised by EDR-300/SPDR-45/ODR-13 are indeed complex, and, since they clearly affect the entire class of supplemental carriers, adequate opportunity should be allowed for the preparation of their coordinated views. Pan American's desire to avoid delay in this proceeding is understandable, but should not, in the opinion of the undersigned, be allowed to outweigh the Board's interest in receiving fully considered and carefully prepared comments on this proposal, within the bounds of reasonable procedural time frames. In the circumstance, a three-week extension of due dates for initial comments and replies thereto seems quite reasonable.

Accordingly, pursuant to authority delegated in the Board's regulations contained in 14 CFR 385.20(d), the undersigned hereby extends the time for the filing of comments in this proceeding to August 11, 1976, and the time for filing of reply comments to August 26, 1976.

Procedures for seeking review of this action are set forth in the Board's regulations contained in 14 CFR 385.50 through 385.54.

(Sec. 204 of the Federal Aviation Act of 1958, as amended; 72 Stat. 743; 49 U.S.C. 1324.)

SIMON J. EILENBERG,
Associate General Counsel, Rules.

[FR Doc.76-20792 Filed 7-16-76;8:45 am]

FEDERAL COMMUNICATIONS COMMISSION

[47 CFR Part 73]

[Docket No. 20877; RM-2535, RM-2541, RM-2560, RM-2634]

TABLE OF ASSIGNMENTS, FM BROADCAST STATIONS

Falmouth, Flemingsburg, Irvine, Lancaster, Lebanon and Versailles, Kentucky

By the Chief, Broadcast Bureau: 1. The Commission here considers four petitions for rulemaking, certain of which (as will be explained below) are mutually exclusive and all of which involve, in varying respects, the assignment of Class A Channel 292 to relatively small communities located in central and northeastern Kentucky.

2. (Lebanon, Lawrenceburg, Lancaster and Versailles, Kentucky, RM-2535.) In this petition,[1] Lebanon-Springfield Broadcasting Company, licensee of AM Station WLBN (WLBN), proposes the reassignment of occupied Channel 265A[2] from Lawrenceburg, Kentucky, to Lebanon, Kentucky, as a first FM assignment to that community. To assure the continuance of service at Versailles and Lawrenceburg, WLBN proposes the reassignment of unoccupied and unapplied-for Channel 292A from Lancaster, Kentucky, to Versailles.[3] WLBN states that the licensee of WJMM at Versailles is aware of the channel assignment request and has indicated that it will bear the expenses of the proposed channel change without the necessity of reimbursement. In response to WLBN's petition, Lancaster Broadcasters, Inc. (LBI), licensee of daytime-only AM Station WIXI, Lancaster, in a letter to the Commission, expressed opposition to the deletion of Channel 292A from Lancaster, saying that it was preparing to file an application for the use of Channel 292A so as to provide a first full-time service for the community. WLBN says that if the channel is assigned to Lebanon as requested, it intends to seek broadcast authority to operate a station on that channel.

3. (Falmouth and Versailles, Kentucky, RM-2541.) In this petition,[4] John M. Barrick (Barrick) proposes the reassignment of unoccupied and unapplied-for Channel 237A from Falmouth, Kentucky, to Versailles[5] and the "drop-in" assignment of Channel 292A at Falmouth. Barrick asserts that, if Channel 237A is assigned to Versailles, he will seek broadcast authority for the operation of a station on that channel.

4. (Irvine and Lancaster, Kentucky, RM-2560.) Here, Irvenna Broadcasting Company, Inc. (Irvenna), licensee of daytime-only AM Station WIRV, Irvine, Kentucky, petitions[6] the Commission to reassign unoccupied and unapplied-for Channel 292A from Lancaster to Irvine where, the petitioner asserts, it could be used to provide the community with its first local full-time service. Though there is no expressed opposition from LBI of Lancaster, presumably, for the same reasons it articulated in connection with the WLBN petition, it would oppose this petition also.

5. (Flemingsburg, Kentucky, RM-2634.) This petition,[7] filed by James Short (Short), requests the "drop-in" assignment of Channel 292A at Flemingsburg, Kentucky, as a first broadcast assignment to the community. No other changes in the FM Table of Assignments would be required. Short avers that the requested allocation is the only AM or FM channel that can be assigned to Flemingsburg without creating a short-spacing situation. Short states that, if Channel 292A is assigned as requested, he will seek broadcast authorty for the operation of the station on that channel.

6. There a considerable number of conflicts which arise among the various proposals. The WLBN proposal to reassign Channel 265A to Lebanon and Channel 292A to Versailles conflicts, first of all, with the expressed desire of LBI at Lancaster, and secondly, with the proposals of Barrick and Irvenna to assign Channel 292A to Falmouth (though Channel 292A need not be assigned to Falmouth) and Irvine, respectfully, since, under the Commission's minimum mileage separation rules,[8] Channel 292A could not be assigned to all four communities. If Channel 292A is allowed to remain at Lancaster, as requested by LBI, it would bar both the WLBN and the Irvenna proposals; however, Channel 292A could still be assigned to either Falmouth or Flemingsburg (but not both since the two communities are less than 65 miles apart). Irvenna's proposal to reassign Channel 292A from Lancaster to Irvine would, on its face, conflict with the apparent intentions of LBI at Lancaster; further, the assignment of Channel 292A at Irvine would also preclude the use of that channel at Versailles and at Flemingsburg although it could be assigned to Falmouth. Short's proposal to assign Channel 292A at Flemingsburg[9] would allow the use of Channel 292A at Versailles but would preclude the use of that channel at Irvine and Falmouth. Finally, the drop-in assignment of Channel 292A at Falmouth would allow for the use of that channel at either Irvine or Lancaster (but not both), however, it would preclude the use of the channel at Versailles and Flemingsburg. In sum, the WLBN and Barrick proposals are mutually exclusive; the WLBN and Irvine proposals are mutually exclusive; the Flemingsburg and Irvine proposals are mutually exclusive as are the Flemingsburg and Barrick proposals; and LBI would presumably object to any proposal which would remove Channel 292A from Lancaster.

[1] Public Notice of the filing of this petition was issued on April 7, 1975 (Rpt. No. 941).

[2] Channel 265A is assigned to Lawrenceburg, but, under the Commission's "10-mile" rule (§ 73.207(b)), is being utilized by WJMM-FM, Versailles. If it were reassigned to Lebanon, the transmitter site would have to be located either 2.5 miles southeast or 1 mile northeast of the city.

[3] The transmitter site for a station operating on Channel 292A at Versailles would have to be located 5 miles northeast of the community.

[4] Public Notice of the filing of the petition was issued on April 25, 1975 (Rpt. No. 942).

[5] A transmitter site for Channel 237A at Versailles will have to be located 7½ miles northeast of the community.

[6] Public Notice of the filing of the petition was issued on July 17, 1975 (Rpt. No. 947).

[7] Public Notice of the filing of the petition was issued on January 14, 1976 (Rpt. No. 960).

[8] See § 73.207(a) of the Commission's rules.

[9] However, the transmitter site would need to be located 5½ miles northeast of Flemingsburg.

7. Lebanon (pop. 5,528[10]), the seat of Marion County (pop. 16,714), is described by WLBN as a wholesale and retail trade center and a community whose economy is based both on agriculture and manufacturing. Lebanon receives local aural service from the petitioner's daytime-only AM Station WLBN. There are presently no FM channels assigned to the community.

8. Versaille (pop. 5,679), the seat of Woodford County (pop. 14,434), is located approximately 55 miles east of Louisville, Kentucky, and 15 miles west, northwest of Lexington, Kentucky. Versailles is currently served by one FM broadcast station, WJMM, which operates under the "ten-mile" rule[11] on Channel 265A which is assigned to Lawrenceburg. The economy of Versailles, according to Barrick, is based on manufacturing and agricultural production, principally tobacco.

9. Irvine (pop. 2,918), the seat of Estill County (pop. 13,200) is located approximately 38 miles southeast of Lexington. The community presently receives local aural service from the petitioner's daytime-only AM Station WIRV. The petitioner supplied little information describing the community.

10. Flemingsburg (pop. 2,483), the seat of Fleming County (pop. 11,366), presently has no local aural service. Petitioner Short describes the community as an agricultural center and notes also that industrial growth in the community has increased in excess of 200 percent in the past decade. Short also asserts that Channel 292A is the only AM or FM channel that can be assigned to the community without the creation of short-spacing to other assignments.[12]

11. The Commission does not, at this time, have detailed community data for either Lancaster or Falmouth, two additional communities that could be affected by the proposed channel assignment.

12. WLBN's proposed assignment of Channel 265A to Lebanon would cause co-channel preclusion affecting one community, Springfield, Kentucky (pop. 2,691), which has no local broadcast service. The assignment of Channel 292A at Versailles would cause co-channel preclusion affecting ten Kentucky communities with populations greater than 2,500, all but two (Nicholasville and Irvine) of which have at least one FM assignment. Four of these communities having populations greater than 1,000 but less than 2,500 are presently without either an AM or an FM facility. Barrick's proposal to assign Channel 237A to Versailles would create co-channel preclusion affecting an area containing six communities having populations greater than 1,000. Four of these communities have neither an AM nor FM facility. The assignment of Channel 292A at Falmouth would create a co-channel preclusion area containing five communities with populations greater than 1,000 two of which are without either an AM or FM facility. The assignment of Channel 292A to Irvine would create co-channel preclusion in an area having nineteen communities with populations greater than 1,000, eleven of the nineteen having populations greater than 2,500. Of the eleven, only Nicholasville (pop. 5,809) does not have an FM assignment, however, it does have an AM facility. Six of the communities with populations greater than 1,000 but less than 2,500 have neither an AM nor an FM facility. Finally, the assignment of Channel 292A to Flemingsburg would create co-channel preclusion in an area containing five communities with populations greater than 1,000. Of the group, only Falmouth has neither an AM nor an FM facility.

13. For the purpose of determining which of the proposed assignments would best serve the public interest, each of the petitioners (and LBI) should submit Roanoke Rapids/Anamosa[13] showings demonstrating the extent of first and second service that would be provided by each of the proposed assignments. Further, each petitioner should identify communities located in the areas of preclusion created by the proposed assignments and indicate whether alternate channels are available for use in those communities. In the case of the WLBN proposal, the petitioner should submit a written, notarized statement from the licensee of WJMM indicating that it fully understands the implications of the WLBN proposal and that it will accept the proposed channel change without the necessity of reimbursement. Further, in the case of the existing channel assignment at Lancaster, LBI should provide the general information requested of the parties; in addition, it should specify with particularity its intent with regard to the use of Channel 292A at Lancaster. Failure to provide the requested information may result in the assignment of the channel elsewhere.

14. For the purpose of eliciting comments on which of the requested actions would most benefit the public interest, the Commission offers the following alternative proposals to amend the FM Table of Assignments (§ 73.202(b) of the Commission's rules and regulations) with regard to the numerated communities set forth below:

Assignment plans

City	Channel No. Present	Channel No. Proposed
PLAN I		
Falmouth, Ky	237A	292A
Flemingsburg, Ky		
Irvine, Ky		292A
Lancaster, Ky	292A	
Lawrenceburg, Ky	265A	
Lebanon, Ky		
Versailles, Ky		237A, 265A
PLAN II		
Falmouth, Ky	237A	237A
Flemingsburg, Ky		292A
Irvine, Ky		
Lancaster, Ky	292A	
Lawrenceburg, Ky	265A	
Lebanon, Ky		265A
Versailles, Ky		292A
PLAN III		
Falmouth, Ky	237A	
Flemingsburg, Ky		292A
Irvine, Ky		
Lancaster, Ky	292A	
Lawrenceburg, Ky	265A	
Lebanon, Ky		265A
Versailles, Ky		237A, 292A
PLAN IV		
Falmouth, Ky	237A	
Flemingsburg, Ky		292A
Irvine, Ky		
Lancaster, Ky	292A	292A
Lawrenceburg, Ky	265A	
Lebanon, Ky		265A
Versailles, Ky		237A [1]

[1] Effects of the various plans:

Plan I.—Grant Versailles (RM-2541) Barrick and Irvine (RM-2560) Irvenna petitions. Lancaster loses its channel (292A); Falmouth channel 237A deleted and replaced by 292A; deny Lebanon (RM-2535) WLBN and Flemingsburg (RM-2634) Short petitions.

Plan II.—Grant Lebanon (RM-2535) WLBN and Flemingsburg (RM-2634) Short petitions. Lancaster loses its channel (292A); Versailles channel 265A deleted and replaced by 292A; deny Versailles (RM-2541) Barrick and Irvine (RM-2560) Irvenna petitions.

Plan III.—Grant Flemingsburg (RM-2634) Short and Lebanon (RM-2535) WLBN petitions. Lancaster loses its channel (292A); assign 2d channel (237A) to Versailles (RM-2541) Barrick; Falmouth loses its channel (237A) deny Irvine (RM-2560) Irvenna petitions.

Plan IV.—Grant Versailles (RM-2541) Barrick and Lebanon (RM-2535) WLBN in part; Falmouth-channel 237A is deleted; Flemingsburg (RM-2634) Short is granted; Lancaster would retain channel 292A; channel 265A at Lawrenceburg would be replaced by channel 237A to reflect its actual use at Versailles; the Irvine petition (RM-2560) Irvenna would be denied.

15. Although the alternative plans set forth above reflect proposals currently before us, Commission consideration will not be limited to these plans. Dependent upon public interest considerations, the Commission may elect to accept or reject all or portions of each, or it may incorporate counterproposals and other information made available to it.

16. The Commission's authority to institute rule making proceedings, showings required, cut-off procedures, and filing requirements are contained below and are incorporated by reference herein.

17. *It is ordered,* That the Secretary of the Commission is directed to send a copy of this notice of proposed rule making by Certified Mail, Return Receipt Re-

[10] 1970 U.S. Census.

[11] Section 73.203(b) of the Commission's rules.

[12] Assignment of Channel 292A to either Flemingsburg or Falmouth would require concurrence of the Canadian Government since both communities are located within 250 miles of the U.S.-Canadian border.

[13] See Roanoke Rapids, N.C., 9 F.C.C. 2d 672 (1967); Anamosa, Ia., 46 F.C.C. 2d 720 (1974).

quested, to Lancaster Broadcasters, Inc., Lancaster, Kentucky.

18. Interested parties may file comments on or before August 16, 1976, and reply comments on or before September 7, 1976.

Adopted: July 2, 1976.

Released: July 14, 1976.

FEDERAL COMMUNICATIONS COMMISSION,
WALLACE E. JOHNSON,
Chief, Broadcast Bureau.

1. Pursuant to authority found in sections 4(i), 5(d)(1), 303 (g) and (r), and 307(b) of the Communications Act of 1934, as amended, and § 0.281(b)(6) of the Commission's rules, it is proposed to amend the FM Table of Assignments, § 73.202(b) of the Commission's rules and regulations, as set forth in the notice of proposed rule making to which this is attached.

2. *Showings required.* Comments are invited on the proposal(s) discussed in the notice of proposed rule making to which this is attached. Proponent(s) will be expected to answer whatever questions are presented in initial comments. The proponent of a proposed assignment is also expected to file comments even if it only resubmits or incorporates by reference its former pleadings. It should also restate its present intention to apply for the channel if it is assigned, and, if authorized, to build the station promptly. Failure to file may lead to denial of the request.

3. *Cut-off procedures.* The following procedures will govern the consideration of filings in this proceeding.

(a) Counterproposals advanced in this proceeding itself will be considered, if advanced in initial comments, so that parties may comment on them in reply comments. They will not be considered if advanced in reply comments. (See § 1.420(d) of Commission rules.)

(b) With respect to petitions for rule making which conflict with the proposal(s) in this Notice, they will be considered as comments in the proceeding, and Public Notice to this effect will be given as long as they are filed before the date for filing initial comments herein. If filed later than that, they will not be considered in connection with the decision in this docket.

4. *Comments and reply comments; service.* Pursuant to applicable procedures set out in §§ 1.415 and 1.420 of the Commission's rules and regulations, interested parties may file comments and reply comments on or before the dates set forth in the notice of proposed rule making to which this is attached. All submissions by parties to this proceeding or persons acting on behalf of such parties must be made in written comments, reply comments, or other appropriate pleadings. Comments shall be served on the petitioner by the person filing the comments. Reply comments shall be served on the person(s) who filed comments to which the reply is directed. Such comments and reply comments shall be accompanied by a certificate of service. (See § 1.420 (a), (b) and (c) of the Commission Rules.)

5. *Number of copies.* In accordance with the provisions of § 1.420 of the Commission's rules and regulations, an original and four copies of all comments, reply comments, pleadings, briefs, or other documents shall be furnished the Commission.

6. *Public inspection of filings.* All filings made in this proceeding will be available for examination by interested parties during regular business hours in the Commission's Public Reference Room at its headquarters, 1919 M Street, NW., Washington, D.C.

[FR Doc. 76-20731 Filed 7-16-76;8:45 am]

NATIONAL CREDIT UNION ADMINISTRATION

[12 CFR Part 721]

INCIDENTAL POWERS

Extension of Comment Period

On pages 19131 and 19132 of the FEDERAL REGISTER of May 10, 1976, there was published a notice of proposed rulemaking concerning amendments to Part 721.4 (12 CFR Part 721.4) which provided for the closing of the comment period on July 6, 1976. Notice is hereby given that the period for comments has been extended to September 30, 1976.

The May 10, 1976, proposal included a provision which would permit the investment of Federal credit union-held IRA and Keogh funds into obligations issued by the Federal credit union. However, since such obligations are not insured by the National Credit Union Share Insurance Fund, a question has been raised with respect to the use of such obligations as IRA and Keogh investments in light of certain provisions of the Employee Retirement Income Security Act of 1974. Therefore, the comment period has been extended in order that this Administration may receive substantive input from the Department of Labor and the Internal Revenue Service, the agencies primarily responsible for implementing and enforcing the provisions of ERISA.

(Sec. 120, 73 Stat. 635 (12 U.S.C. 1766) and sec. 209, 84 Stat. 1014 (12 U.S.C. 1789).)

C. AUSTIN MONTGOMERY,
Administrator.

[FR Doc.76-20683 Filed 7-16-76;8:45 am]

INTERSTATE COMMERCE COMMISSION

[49 CFR Chapter X]

[Ex Parte No. 328]

TANK CAR ALLOWANCE SYSTEM

Investigation

At a general session of the Interstate Commerce Commission, held at its office in Washington, D.C., on the 12th day of July 1976.

In No. 35537, "Manufacturing Chemists Association, Inc., et al. v. Aberdeen and Rockfish Railroad Company, et al.", I.C.C. , decided July 17, 1975, reaffirmed 350 I.C.C. 886, decided September 22, 1975, and modified by order served April 13, 1976, allowances paid by rail common carriers for the use of privately-owned tank cars were increased and certain adjustments were made in the tank car allowance structure in order to update allowances and account for inflation.

The solution reached, although agreed to by the parties and designed to keep the system current during the near future, was only regarded as a temporary solution. Thus, Division 2 recommended that a rulemaking proceeding be instituted to produce a more definitive framework for the continuing functioning of the allowance system without constant litigation or to devise an alternate system to achieve that goal.

By this notice, in accordance with Part I of the Interstate Commerce Act (49 U.S.C.), and particularly sections 1 (14) and 15(15) thereof, the Commission institutes a rulemaking proceeding to examine the tank car allowance system, to develop methods for its continuing smooth functioning, or to devise an alternate method of compensation to those who furnish privately-owned tank cars.

It has been suggested by various parties that an informal conference be held between the parties and the Commission's staff to develop a framework for the appropriate disposition of the issues raised in this proceeding. We agree that such a conference should be held and set its date herein.

We also agree that the aim of the conference should include, but not necessarily be limited to, these purposes:

(1) To identify what studies, evaluations or agreements need to be made to provide the necessary basis for an intelligent resolution of the remaining issues.

(2) To obtain assurances that the parties in possession of the data will cooperate in participating in the studies, discussions and evaluations.

(3) To afford each and every party in interest the opportunity to make suggestions as to the areas that must or should be studied, evaluated or agreed upon.

(4) To develop methods for resolving differences among the parties when and if such differences should arise.

(5) To discuss the effect, if any, of the amendments to the Interstate Commerce Act, and particularly section 1(14)(a), contained in the Railroad Revitalization and Regulatory Refom Act of 1976, in view of the comments of the Department of Defense in No. 35537.

(6) To discuss whether a more appropriate procedure should be substituted for the current system of compensation.

(7) To discuss whether the allowance levels and other adjustments of the interim solution in No. 35537 should be the basis for the new system or whether the levels prior to the resolution of No. 35537 should be the base and a new updating performed from that base.

It has been suggested that the studies, evaluations or stipulations which should be made include, but not be limited to the following:

(1) Cost of ownership covering capital costs, depreciation and interest, and operating costs including repairing, maintaining, testing, inspecting, and other relevant expense categories.

(2) Utilization of tank cars, to identify and quantify by days and mileages the various uses of tank cars and to identify the degree to which these days and mileages are transportation related.

Parties should be advised that it appears that the following data from the shippers will be required for use in maintaining up-to-date mileage allowances:

A. Data submitted by value groups and separated between owned freight cars and leased freight cars on an annual basis.

1. Number of freight cars.
2. Actual loaded and empty mileage data.
3. Total investment in freight cars (applied only to shipper owned cars on an original cost basis).
4. Depreciated allowances per freight car or a composite percentage (applies to owned cars only).
5. Freight car repair costs (own cars) including:
   a. Railroad billed repair costs.
   b. Leasing or car-company billed costs.
6. Cost of repair performed in own repair facilities, including:
   a. Interest on investment in repair facility.
   b. Depreciation on repair facility.
   c. Salaries of employees working in facility.
   d. Cost of freight car repair materials.
   e. Property taxes on repair facility.
   f. Payroll taxes.
   g. Credit for repairs performed for others.
7. Lease expenses—rental costs paid by shipper to lessor for use of freight cars (include car repair expense separately).
8. The amount paid by the railroads to the shipper in the form of mileage allowances.

NOTE.—If an apportioning factor is used for separating any or all of these data, please explain the method used.

Various parties suggest that the following issues, among others which may be determined to be relevant, will require resolution:

(1) What alternatives to the present mileage basis of compensating private tank cars should be considered?

(2) What updating procedures should be adopted to keep tank car allowances at currently appropriate levels?

(3) Should incentives and disciplines be provided to encourage efficient utilization of tank cars by railroads and tank car owners and lessees?

(4) What valuation ceiling, if any, should be used for determining reimbursable tank car cost?

(5) What changes and improvements should be made in the accounting procedures related to tank car movement and compensation?

(6) What is the appropriate value basis for costing or grouping tank cars?

(7) What rules should apply to the storage and handling of empty tank cars?

The Department of Defense has suggested that the following issues also be considered:

(1) Whether overhead should be expressly stated as an item in section 1(14)(a) of the act;

(2) Whether depreciation adequate to support prudent capital outlays means depreciation determined on a reproduction cost basis;

(3) Whether depreciation may be determined on the basis used in the order served April 13, 1976 in No. 35537 (original cost less depreciation from original date of installation or BCV if higher as of July 1, 1968); and

(4) Whether such application would be within the parameters of generally accepted accounting principles.

Interested parties should refer to the reports of Division 2, and especially the decisions of July 17, 1975, for further thoughts concerning this rulemaking.

The informal conference will convene at 9:30 a.m. on August 31, 1976, at the Offices of the Interstate Commerce Commission, Washington, D.C. Parties interested in this matter, including carriers, tank car owners and lessees, the shipping public, and concerned Federal, State or local officials should notify the Commission of their intent to participate by filing a letter with the Secretary of the Commission to that effect on or before August 24, 1976. Any written representations should be filed on or before the same date, August 24, 1976 and served upon any known parties in interest.

It is ordered, That pursuant to sections 553 and 559 of the Administrative procedure Act (5 U.S.C.), the national transportation policy (49 U.S.C. preceding section 1), and Part I of the Interstate Commerce Act, and especially sections 1(14) and 15(15) thereof, a proceeding be, and it is hereby instituted to investigate the need for regulations concerning the allowance system by which common carriers by railroad compensate shippers for the use of privately-owned tank cars, to examine the allowance system, to consider alternatives to the system to provide a method for updating, and to address the various areas of inquiry raised in the above notice and other issues raised by such investigation.

It is further ordered, That the railroad parties to Agent J. F. Doyle's Tariff 7-F, ICC No. H-68, and successor tariffs, be, and they are hereby, made respondents in this proceeding.

It is further ordered, That the complainants and intervening complainants in Nos. 35537 and 35586, Corn Refiners' Association, Inc., the Department of Defense, and the LO Shippers Action Committee be invited to participate as their interests may appear.

It is further ordered, That an informal conference be held as scheduled above.

It is further ordered, That all parties desiring to participate in this proceeding and to file and receive copies of pleadings shall make known that fact by notifying the Office of Proceedings, Room 5342, Interstate Commerce Commission, Washington, D.C. 20423, on or before August 24, 1976, the same date for filing a letter with the Secretary regarding intent to participate in the informal conference, as well as the date for filing any written representations. Although individual participation is not precluded, parties having common interests should endeavor to consolidate their presentations to the greatest extent possible in order to conserve time and to avoid unnecessary expense.

It is further ordered, That, as soon as practicable after the date of indicating a desire to participate in the proceeding (August 24, 1976) has passed, the Commission will serve a list of the names and addresses of all persons upon whom service of all pleadings must be made and that thereafter, and after the informal conference scheduled above, this proceeding will be assigned for oral hearing or handling under modified procedure.

And it is further ordered, That a copy of this order be served upon all of the parties in Nos. 35537 and 35586, namely, railroad parties to Agent J. F. Doyle's Tariff 7-F, ICC No. H-68; General American Transportation Corporation, North American Car Corporation, Shippers Car Line Division of ACF Industries, Inc. and Union Tank Car Company, jointly; Manufacturing Chemists Association, Inc.; Allied Chemical Corporation; the American Petroleum Institute; the Institute of Shortening and Edible Oils, Inc.; Swift Edible Oil Company and Swift Fresh Meats Company, Divisions of Swift and Company and Swift Chemical Company, jointly; Armour and Company; and Dow Chemical Company, Monsanto Chemical Company, and Union Carbide Corporation, jointly; as well as any interested parties receiving copies of the pleadings in those proceedings; and upon Corn Refiners' Association, Inc., the Department of Defense, and LO Shippers Action Committee; and that further notice of this proceeding be given to the public by depositing a copy of this order in the office of the Secretary of the Interstate Commerce Commission at Washington, D.C., and by filing a copy with the Director, Office of the Federal Register, for publication in the FEDERAL REGISTER.

This is not a major Federal action significantly affecting the quality of the human environment within the meaning of the National Environmental Policy Act of 1969.

By the Commission.

ROBERT L. OSWALD,
Secretary.

[FR Doc.76-20938 Filed 7-16-76;8:45 am]

DEPARTMENT OF TRANSPORTATION

Federal Aviation Administration

[14 CFR Part 39]

[Docket No. 75-NW-23-AD]

AIRWORTHINESS DIRECTIVES; PROPOSED

Boeing 707-300, -400, -300B, -300C Series Airplanes

The Federal Aviation Administration is considering amending Part 39 of the Federal Aviation Regulations by adding an AD applicable to the Boeing 707-300, -400, -300B, -300C series airplanes. Over the past 12 years there have been numerous cracks in the upper wing skin and upper chord along the rear spar. In addition there have been instances of cracking in the upper wing skin under and around the beavertail as well as in the W.S. 360 splice plate. Several AD's have resulted from these service difficulties.

The FAA initially considered proposing corrective action to preclude further cracking by replacement of the upper aft inboard skin panel and W.S. 360 splice plate. However, following a January 1976 FAA-industry meeting at which the manufacturer and most operators were represented, a determination was made, that, as an alternative to terminating action, a comprehensive inspection program would provide an acceptable level of safety. Pan American World Airways provided a detailed summary of its inspection program for the upper wing skin.

This notice is drawn in large measure from data received from the Boeing Company and Pan American World Airways and sets outs an inspection program to assure the integrity of the particular wing skin. This Notice does not include any additional action at the W.S. 360 splice plate since AD 75-03-01 has been shown to be adequate. The proposed airworthiness directive requires X-ray inspection of the wing skin under the beavertail from the rear spar through stringer No. 14 and the inboard rear spar chord; low frequency eddy current inspections of the wing skin, outboard rear spar chord, stringer and stringer splice angles.

Interested persons are invited to participate in the making of the proposed rule by submitting such written data, views, or arguments as they may desire. Communications should identify the docket number and be submitted in duplicate to the Department of Transportation, Federal Aviation Administration, Northwest Region, Office of Regional Counsel, Attention: Airworthiness Rules Docket, 9010 East Marginal Way South, Seattle, Washington 98108. All communications received on or before September 15, 1976, will be considered by the Administrator before taking action upon the proposed rule. The proposals contained in this notice may be changed in the light of comments received. All comments will be available, both before and after the closing date for comments, in the Rules Docket for examination by interested persons.

In consideration of the foregoing, it is proposed to amend § 39.13 of the Federal Aviation Regulations by adding the following new airworthiness directive:

BOEING: Applies to Model 707-300,-400, -300B, -300C series airplanes listed in Boeing Service Bulletin No. 3168 certificated in all categories.

Compliance required as indicated unless already accomplished.

A Within the next 200 landings unless accomplished within the last 200 landings and at intervals thereafter not to exceed 400 ladings, accomplish the following:

1. X-ray inspect the wing skin under the beavertail for cracks from the rear spar through stringer No. 14 and the rear spar chord and the adjacent wing skin from the side of the body to W.S. 197 in accordance with Boeing Service Bulletin No. 3168, Revision 1 (to be released), or in a manner approved by the Chief, Engineering and Manufacturing Branch, FAA Northwest Region.

2. Wing skins and rear spar chords found cracked are to be repaired prior to further revenue flight in accordance with Boeing Service Bulletin No. 2427 or 2607 or 3168, Revision 1 (to be released), or in a manner approved by the Chief, Engineering and Manufacturing Branch, FAA Northwest Region. Inspectors are to continue for areas not repaired until terminating action per paragraph C has been accomplished.

B. Within the next 600 landings unless accomplished within the last 600 landings and at intervals thereafter not to exceed 1200 landings, accomplish the following:

1. Using low frequency eddy current inspection techniques described in Boeing Service Bulletin No. 3280 (to be released) or in a manner approved by the Chief, Engineering and Manufacturing Branch, FAA Northwest Region, inspect the following areas:

a. Rear spar upper chord and wing skin along the rear spar for cracks from wing station 197 to 270.

b. Wing skin and upper flange of the stringers from rear spar through stringer No. 12, outboard (only) of the beavertail at the stringer splice fasteners as described in Boeing Service Bulletin No. 3280 (to be released). (NOTE.—Boeing Service Bulletin No. 3239 Figure 1 details these areas.)

c. Wing skin and upper flanges of stringer Nos. 10 and 11 at the right and left hand fuel filler cap fittings at W.S. 298 as described in Boeing Service Bulletin No. 3280 (to be released). (NOTE.—Boeing Service Bulletin No. 2892, Revision 1 details these areas.)

2. Wing skins, rear spar upper chords, stringers and stringer splices found cracked are to be repaired prior to further revenue flight in accordance with Boeing Service Bulletin No. 3280 (to be released) or in a manner approved by the Chief, Engineering and Manufacturing Branch, FAA Northwest Region. Inspections are to continue for areas not repaired until terminating action of paragraph C is accomplished.

C. Terminating action for this AD is installation of a new wing skin and associated structure in accordance with Boeing Service Bulletin No. 2607 or external doublers in accordance with Boeing Service Bulletin No. 2427 Part X(a), and in conjunction with the installation of the longer stringer splice angles in accordance with Boeing Service Bulletin No. 2892, Revision 1.

D. For airplanes with rear spar and/or upper wing skin repairs or modifications which interfere with the inspections of this AD, contact the Chief, Engineering and Manufacturing Branch, FAA Northwest Region, for approval of an acceptable method of compliance. Appropriate information for each airplane must precede contact. The information supplied will be used to establish inspection intervals based on its fatigue life relative to the new wing skin of Boeing Service Bulletin No. 2607.

The proposed rule, if adopted, will supersede AD 68-7-3 (Amendment 39-571), AD 68-16-3 (Amendment 39-629), and paragraph (a) of AD 64-11-1 (Amendment 39-629).

(Secs. 313(a), 601, and 603 of the Federal Aviation Act of 1958 (49 U.S.C. 1354(a), 1421, 1423) and of sec. 6(c) of the Department of Transportation Act (49 U.S.C. 1655(c)).)

Issued in Seattle, Washington, July 8, 1976.

C. B. WALK, Jr.,
Director, Northwest Region.

[FR Doc.76-20562 Filed 7-16-76;8:45 am]

[14 CFR Part 39]

[Docket No. 76-WE-12-AD]

AIRWORTHINESS DIRECTIVES; PROPOSED

McDonnell Douglas Model DC-10 Series Airplanes

The Federal Aviation Administration is considering amending Part 39 of the Federal Aviation Regulations by adding an airworthiness directive applicable to McDonnell Douglas Model DC-10-10, DC-10-10F, DC-10-30, DC-10-30F, and DC-10-40 airplanes. There have been three cases of an air conditioning compartment access door on a DC-10 aircraft separating in flight. The National Transportation Safety Board has expressed concern that a possible unsafe condition exists wherein the in-flight separation of an air conditioning compartment access door presents hazards of injury to persons on the ground and of serious damage to an engine resulting from the engine's injestion of the door.

In Safety Recommendation No. A-76-90, the NTSB recommended that the Federal Aviation Administration:

Examine the guidance provided in the McDonnell Douglas All Operators Letters and Service Bulletins pertaining to the DC-10 air conditioning compartment access doors, and consolidate their pertinent provisions into an Airworthiness Directive. The AD should, in addition, require a one-time inspection of the rigging of these doors.

Therefore, in consonance with the NTSB recommendation and since the possible unsafe condition is likely to exist or develop in other airplanes of the same type design, the Federal Aviation Administration is proposing an Airworthiness Directive (AD) to require a one-time inspection of the rigging of the air conditioning compartment doors and modification of the doors and their latching mechanism on McDonnell Douglas Model DC-10-10, DC-10-10F, DC-10-30, DC-10-30F, and DC-10-40 airplanes.

Interested persons are invited to participate in the making of the proposed rule by submitting such written data, views, or arguments as they may desire. Information on the economic, environmental, and energy impact that might result because of adoption of the pro-

posed rule is requested. Communications should identify the docket number and be submitted in duplicate to the Federal Aviation Administration, Western Region, Attention: Regional Counsel, Airworthiness Rules Docket, P.O. Box 92007, World Way Postal Center, Los Angeles, California 90009. All communications received on or before August 24, 1976, will be considered by the Administrator before taking action upon the proposed rule. The proposals contained in this notice may be changed in the light of comments received. All comments will be available, both before and after the closing date for comments, in the Rules Docket for examination by interested persons.

This amendment is proposed under the authority of sections 313(a), 601, and 603 of the Federal Aviation Act of 1958 (49 U.S.C. 1354(a), 1421, 1423) and of section 6(c) of the Department of Transportation Act (49 U.S.C. 1655(c)).

In consideration of the foregoing, it is proposed to amend § 39.13 of Part 39 of the Federal Aviation Regulations by adding the following new airworthiness directive:

McDonnell Douglas. Applies to Model DC-10-10, DC-10-10F, DC-10-30, DC-10-30F, and DC-10-40 airplanes certificated in all categories.

Compliance required as indicated.

To prevent in-flight separation of an air conditioning compartment access door, accomplish the following:

(a) Within the next 400 hours time in service after the effective date of this AD unless already accomplished within the last 1,000 hours time in service, or unless the modifications of paragraph (c) have been accomplished, inspect the air conditioning compartment access doors to determine that the door handle loads and rigging of the latches conforms to the limits outlined in Chapter 52-42-01 of the McDonnell Douglas Model DC-10 Maintenance Manual effective July 1, 1975, or later revision, or equivalent instructions approved by the Chief, Aircraft Engineering Division, FAA Western Region.

(b) If discrepancies are found during the inspections required by paragraph (a), before further flight, rerig the affected compartment access door handles and latches as necessary in accordance with the DC-10 Maintenance Manual instructions or equivalent procedures approved by the Chief, Aircraft Engineering Division, FAA Western Region.

(c) Within the next 2,000 hours time in service after the effective date of this AD, unless already accomplished, modify the air conditioning compartment door handle assemblies, install secondary latch mechanisms to the handle, install plate ends on the latch brackets, and install tees and stiffeners on the door inner structure in accordance with McDonnell Douglas Model DC-10 Service Bulletin No. 52-116, Revision 1 dated August 16, 1974, and DC-10 Service Bulletin No. 52-122, Revision 1, dated August 18, 1975, or later FAA approved revision or equivalent modifications approved by the Chief, Aircraft Engineering Division, FAA Western Region.

(d) The airplane may be flown in accordance with FAR 21.197 to a base where the repair can be performed.

Issued in Los Angeles, California on July 6, 1976.

Lynn L. Hink,
Acting Director,
FAA Western Region.

[FR Doc.76-20564 Filed 7-16-76;8:45 am]

[14 CFR Part 71]

[Airspace Docket No. 76-WE-20]

TRANSITION AREA

Proposed Designation

The Federal Aviation Administration is considering an amendment to Part 71 of the Federal Aviation Regulations that would establish a new 700 foot transition area for Window Rock Airport, Window Rock, Arizona.

A new instrument approach procedure has been developed for Window Rock Airport, Window Rock, Arizona. This new procedure is based on the Gallup, New Mexico VORTAC 318° T (305° M) radial. Gallup (GUP) VORTAC is the initial approach fix and GUP 305° 9 DME is the final approach fix. The 700 foot transition area is required to provide controlled airspace protection for aircraft executing the instrument procedure.

Interested persons may participate in the proposed rule making by submitting such written data, views, or arguments as they may desire. Communications should be submitted in triplicate to the Chief, Airspace and Procedures Branch, Federal Aviation Administration, 15000 Aviation Boulevard, Lawndale, California 90261. All communications received on or before August 18, 1976, will be considered before action is taken on the proposed amendment. No public hearing is contemplated at this time, but arrangements for informal conferences with Federal Aviation Administration officials may be made by contacting the Regional Air Traffic Division Chief. Any data, views, or arguments presented during such conferences must also be submitted in writing in accordance with this notice in order to become part of the record for consideration. The proposal contained in this notice may be changed in the light of comments received.

A public docket will be available for examination by interested persons in the Office of the Regional Counsel, Federal Aviation Administration, 15000 Aviation Boulevard, Lawndale, California 90261.

In consideration of the foregoing, the FAA proposes the following airspace action.

In § 71.181 (41 FR 440) the following transition area is added:

Window Rock, Arizona

That airspace extending upward from 700 feet above the surface within a 5-mile radius of Window Rock Airport (latitude 35°39'29" N, longitude 109°03'28" W) and within 3 miles each side of the Gallup VORTAC 318° radial, extending from the 5-mile radius area to the Gallup VORTAC.

(Sec. 307(a) of the Federal Aviation Act of 1958, as amended (49 U.S.C. 1348 (a)), and of sec. 6(c) of the Department of Transportation Act (49 U.S.C. 1655(c)).)

Issued in Los Angeles, California on July 6, 1976.

Lynn L. Hink,
Acting Director, Western Region.

[FR Doc.76-20563 Filed 7-16-76;8:45 am]

National Highway Traffic Safety Administration

[49 CFR Part 571]

[Docket No. 74-14; Notice 05]

PASSENGER CARS

Occupant Crash Protection

This notice proposes an amendment of Standard No. 208, *Occupant Crash Protection*, that would extend until August 31, 1977, the three options that are currently available for occupant crash protection in passenger cars. Several modifications of test requirements and procedures are also proposed.

The requirements of Standard No. 208 (49 CFR 571.208) have been implemented in three stages. The current stage for passenger cars specifies a choice of three means to provide occupant protection (S4.1.2) and is scheduled to end August 31, 1976. The Secretary of Transportation has initiated a process for the establishment of future occupant crash protection requirements (41 FR 24070, June 14, 1976), but this process will not be completed early enough to permit the specification of new requirements by August 31, 1976. For this reason, the National Highway Traffic Safety Administration proposes the extension of the existing requirements for an interim period of 1 year.

Manufacturers are prepared to meet the existing performance options on passenger cars manufactured after August 31, 1976, and as a practical matter are not prepared to meet different requirements. Component supplies and manufacturing capability are in place to continue to provide the same levels of protection as have been specified to date. The agency therefore considers that the 1-year extension of existing requirements conforms to the statutory requirements of the National Traffic and Motor Vehicle Safety Act for the issuance of standards (15 U.S.C. 1392(a)). Conforming date changes in S5.3, S6.2, and S6.3 would be made to continue the available options in their present forms.

Two of the three available options permit a manufacturer to provide certain levels of occupant protection by means that do not require action by the vehicle occupant (commonly known as passive protection). While most vehicles are manufactured in satisfaction of the third option which does not specify passive protection (S4.1.2.3), General Motors Corporation and Volkswagenwerk AG (Volkswagen) have equipped a small

number of their vehicles with passive protection.

To improve the two available options for the benefit of manufacturers who choose to utilize them during the period of proposed extension, and to conform the passive protection requirements to those proposed by the Department, the agency proposes several modifications of the passive protection options, associated injury criteria, and test procedures. Because some time may be needed to evaluate the new dummy-positioning procedures, separate comment closing dates have been established for the 1-year extension proposal, and the technical changes proposal.

With regard to the proposed extension of existing requirements until August 31, 1977, and the accompanying technical changes to passive protection options, the agency finds that no new regulatory consequences of a significant nature would result, unless they become a portion of the Departmental decision on future requirements. The economic and other consequences of such a decision have been fully addressed by the Department.

Dr. John D. States of the National Motor Vehicle Safety Advisory Council recently petitioned for the amendment of Standard No. 208 "so that passive (automatic) belt systems would be in compliance for a time period sufficiently long to encourage acceptance by vehicle manufacturers." Dr. States referred to the passive belt system offered by Volkswagen under existing S4.1.2.2 as the basis for the request. In view of the Secretary's recent proposal, Dr. States' petition is granted, except to the degree that the mandatory aspects of the fourth and fifth alternatives of the Secretary's notice might require impacts at a 30-degree angle from the perpendicular that the Volkswagen system may be unable to satisfy. The reasons for these possible courses of action are set forth in the Department's proposal.

The changes proposed herein requirements, injury criteria, and test procedures for the passive protection options arose in the context of a March 1974 NHTSA proposal to mandate passive restraints for all vehicles (39 FR 10271, March 19, 1974). While that proposal is superseded by the Department's more recent proposal, the agency has evaluated manufacturer comments made on the March 1974 proposal and at a subsequent public meeting on passive protection (40 FR 13330, March 26, 1975). The agency's own continuing research and development activities also have provided the basis for reproposal of some of the technical modifications first proposed in March 1974, as well as some additional new specifications. References to manufacturer comments in the following discussion, unless otherwise indicated, are to comments made on the March 1974 proposal.

In developing its optional passive belt system, Volkswagen raised the question of the feasibility of small cars meeting lateral impact requirements: A 20-mph impact by a 4,000-pound, 60-inch high flat surface. Because small cars are particularly vulnerable to side impact, it is most important to maintain practicable protection levels for them, based on the weight of the average car which is likely to impact them. However, it may be difficult for small cars to meet the impact requirements using a 4,000-pound barrier in the next few years. Accordingly, a lap belt option would be provided. This conforms to the option in the Department's proposal. A similar lap belt option is proposed for the rollover requirement in conformity with the Department's proposal.

Some small cars choosing the passive protection option for lateral impact may have difficulty in meeting the "no ejection" criteria (S6.1) because of their flat doors and proximity of the window glazing to the occupant. Toyo Kogyo stressed the difficulty in determining whether ejection occurs because the glazing may shatter and permit a small outward movement of the head. Toyo Kogyo suggested relying on the head injury criteria alone (S6.2) in this situation. It is agreed that a head acceleration limit will, as a practical matter, prohibit ejection by prohibiting head contact outside the vehicle with the barrier surface. For this reason, the prohibition on ejection would be deleted from the lateral barrier crash.

Manufacturers also commented extensively in March 1974 on specifications for the test device (or dummy) used to test under the options, and particularly on the dummy's positioning in the vehicle, its sensitivity, its similarity to humans, and its objectivity as a measuring device.

The issue of dummy objectivity has been fully treated in a separate notice (40 FR 33462, August 8, 1975) proposing amendment of Part 572, Anthropomorphic Test Dummy (49 CFR Part 572). The agency has, of course, already made the finding that the dummy as specified satisfies the criteria of the Act for objectivity (39 FR 10271, March 19, 1974). It should be noted that regardless of the level of objectivity of the Part 572 dummy as a measuring device, it cannot be expected to eliminate all variation in the complex testing of vehicles in a 30-mph dynamic barrier crash. It is obvious that variations inherent in the tested vehicles can introduce numerous performance variations independent of dummy objectivity.

Manufacturers requested further specification of the dummy positioning procedures to eliminate possible contradictions and sources of variation in conducting repeatable tests, particularly among vehicles of different sizes. Although it appears that current test methods are reasonable, as experienced in NHTSA crash testing of 26 1974 and 1975 vehicles equipped with passive restraints to comply with Standard No. 208, this notice proposes some simplification and further specifications of the positioning used to place the dummy at the different designated seating positions.

The major modification would be the use of only two dummies in any test of a restraint system for all of the front seat occupants, whether or not the system is designed to serve three designated seating positions. In bench seating with three positions, the system would have to comply with a dummy at the driver's position and at either of the other two designated seating positions. This change eliminates the problem associated with placement of three 50th-percentile male dummies side-by-side in smaller vehicles. Lateral placement of the dummy in the vehicle, placement of its limbs, and settling techniques are also specified to assure similar testing for certification and compliance.

As noted in the agency's August 8, 1975, discussion of dummy calibration (40 FR 33462), it appears that use of the dummy in acordance with good test practice should be made explicit by an amendment of S8.1.8 to specify calibration, use, and continued conformity to the calibration specifications without adjustment following a test. An appropriate modification of S8.1.8 is proposed.

Manufacturers questioned several aspects of the frontal and lateral crash modes and their associated injury criteria. It was suggested that chest acceleration limits be based on a severity index in place of the 60g, 3-millisecond limit found in the standard, in order to emphasize the effect of time duration on injury tolerance. The current requirement does in fact consider time duration by permitting acceleration levels higher than 60g for periods less than 3 milliseconds, and this level is considered reasonable. Two years of frontal and oblique crash testing involving 20 vehicles and 56 dummies supports this conclusion, in that no dummy recorded chest accelerations greater than 60g for more than 3 milliseconds.

Manufacturers objected most strongly to the femur force limits of 1,700 pounds. The agency established these levels in 1972, based on then-current cadaver femur-fracture test data. More recent work in this area (conducted at West Virginia University) leads to the conclusion that the femur injury criteria can reasonably be raised to 2,250 pounds, and it is proposed for modification. The two years of crash testing involving 56 dummies did not include any femur force readings higher than 2,207 pounds. As clarification that tension loads are not measured for this criterion, the word "compressive" would be added to the text of S6.4.

Although the head, thorax, and femur injury criteria are specified for both frontal and lateral crash modes, it is recognized that the two tests independently measure different qualities of the vehicle. Appreciable femur force, for example, is generally not incurred in lateral impacts. To simplify test instrumentation, this proposal would eliminate the femur criterion from the requirement. As already discussed with regard to a Toyo Kogyo suggestion, it is proposed that lateral impact performance be

judged on the basis of head and chest criteria only.

The March 1974 proposal would have required rear seat lap belts (or the detachable pelvic portion of a Type 2 belt assembly), and front seat lap belts if the vehicle did not offer passive rollover protection. Manufacturers who expect to use belts at all positions questioned the reasonableness of some of these proposals. With regard to the installation of front seat belts in a vehicle which fails to meet the passive rollover requirements, Volkswagen properly pointed out the inconsistency of mandating front seat belts if the only failure to meet rollover occurred at the rear seating position. This proposal therefore specifies a test device only at the front position.

Manufacturers objected because of increased testing, to the requirement in the March 1974 proposal that a vehicle equipped with front lap belts be capable of meeting the frontal crash requirements both with and without the belt buckled. The NHTSA has previously established in similar circumstances that a manufacturer may substitute an alternative test means for the actual barrier crash, calculated in the exercise of due care to demonstrate that the vehicle would meet the requirement if tested as specified. Since a large percentage of occupants resist wearing belts, it is important for safety that the systems function properly both with and without belts fastened. Therefore, it is considered reasonable to require that the restraint system meet requirements in both modes.

European manufacturers requested the option of providing integral or two-piece lap-shoulder belt asemblies, in front and rear seats in place of lap belts specified by § 4.1.2.1 (b) and (c). Although usage of lap-shoulder belt configurations is lower than lap belts, they do offer better crash protection and are a reasonable alternative to be made available to the manufacturer. This proposal would allow front and rear integral or two-piece lap-shoulder belts as an option. It is further specified that the belts meet the requirements of the seat belt assembly Standard No. 209 (49 CFR 571.209).

The seat belt warning system proposed here parallels the requirements that presently exist for passanger cars.

One commenter asked whether the warning would be required on the lower portion of a passive belt assembly. Passive belts are permitted under § 4.5.3, which provides that the assembly may be used to meet the requirements in place of seat belt assemblies otherwise required. The NHTSA interprets this to mean that passive belts are subject only to the requirements listed for them in § 4.5.3.

A test temperature condition is proposed to conform to the 12-degree range for dummy calibration, to eliminate a possible variation in test performance.

Foreign manufacturers objected that regulations requiring inspection in the United States of pressure vessels used in air cushion restraint systems were an unreasonable restriction on foreign manufacture. The objections have been referred to the cognizant agencies for appropriate action.

In light of the foregoing, it is proposed that Standard No. 208, *Occupant Crash Protection*, 49 CFR 571.208, be amended as follows:

1. The date "August 31, 1976" appearing in the heading and text of § 4.1.2 would be changed to "August 31, 1977."

2. Section § 4.1.2.1 would be amended to read:

§ 4.1.2.1 *First Option—complete passive protection system.* The vehicle shall:

(a) At each front designated seating position meet the frontal crash protection requirements of § 5.1 by means that require no action by vehicle occupants;

(b) At each rear designated seating position have a Type 1 or Type 2 seat belt assembly that conforms to Standard No. 209 and to § 7.1 and § 7.2; and

(c) Either: (1) Meet the lateral crash protection requirements of S5.2 and the rollover crash protection requirements of S5.3 by means that require no action by vehicle occupants; or

(2) At each front designated seating position have a Type 1 or Type 2 seat belt assembly that conforms to Standard No. 209 and to S7.1 through S7.3A, and meet the requirements of S5.1 with front test dummies as required by S5.1, restrained by the Type 1 or Type 2 seat belt assembly (or the pelvic portion of any Type 2 seat belt assembly which has a detachable upper torso belt) in addition to the means that require no action by the vehicle occupant.

3. S5.1 would be amended to read:

S5.1 *Frontal barrier crash.* When the vehicle traveling longitudinally forward at any speed up to and including 30 mph impacts a fixed collision barrier that is perpendicular to the line of travel of the vehicle, or at any angle up to 30° in either direction from the perpendicular to the line of travel of the vehicle, under the applicable conditions of S8, with anthropomorphic test devices at each designated seating position described in (a) or (b) for which a barrier crash test is required under S4., it shall meet the injury criteria of S6. An anthropomorphic test device shall be placed—

(a) In the case of a vehicle equipped with front bucket seats, at each front designated seating position; and

(b) In the case of a vehicle equipped with a front bench seat, at the driver's designated seating position and at any other one front designated seating position.

4. S5.2 would be amended to read:

S5.2 *Lateral moving barrier crash.* When the vehicle is impacted laterally on either side by a barrier moving at 20 mph, with a test device at the front outbroad designated seating position adjacent to the impacted side, under the applicable conditions of S8., it shall meet the injury criteria of S6.2 and S6.3.

5. S5.3 would be amended to read:

S5.3 *Rollover.* When the vehicle is subjected to a rollover test in either lateral direction at 30 mph with a test device in the front outboard designated seating position on its lower side as mounted on the test platform, under the applicable conditions of S8, it shall meet the injury criteria of S6.1. However, vehicles manufactured before August 31, 1977, that conform to the requirements of Standard No. 216 (§ 571.216) need not conform to this rollover test requirement.

6. In the second sentence of S6.2, the dates "August 31, 1976" and "August 15, 1977" would be changed to "August 31, 1977".

7. In the second sentence of S6.3, the dates "August 31, 1976" and "August 15, 1977 would be changed to "August 31, 1977".

8. S6.4 would be amended to read:

S6.4 The compressive force transmitted axially through each upper leg shall not exceed 2,250 pounds.

9. S8.1.2 would be amended by the addition of a new sentence that reads:

If an adjustment position does not exist midway between the forwardmost and rearmost positions, the closest adjustment position to the rear of the midpoint is used.

10. S8.1.3 would be amended by the addition to two sentences that read:

If a nominal position is not specified, the seat back is positioned so that the accelerometer surface in the dummy head, as positioned in the vehicle, is horizontal. If the vehicle is equipped with adjustable head restraints, each is adjusted to its highest adjustment position.

11. Section S8.1.8 would be amended to read:

S8.1.8 Anthropomorphic test devices used for the evaluation of restraint systems manufactured pursuant to section S4 conform to the requirements of Part 572 of this title prior to use in any test, and, without any adjustment, subsequent to use in any test.

12. S8.1.9 would be amended to read:

S8.1.9 Each test dummy is clothed in formfitting cotton stretch garments with short sleeves and midcalf length pants. Each foot of the dummy is equipped with a size 11EE shoe which meets the configuration, size, sole, and heel thickness specifications of MIL-S-13192 and weighs 1.25±0.2 pounds.

13. S8.1.11 through S8.1.15 would be replaced by a new S8.1.11 through S8.1.13 to read:

S8.1.11 *Dummy placement in vehicle.* Anthropomorphic test dummies are placed in the vehicle in accordance with S8.1.11.1 and S8.1.11.2, and except as otherwise specified, the dummies are not restrained during an impact by any means that require occupant action.

S8.1.11.1 *Vehicle equipped with front bucket seats.* In the case of a vehicle equipped with front bucket seats, dummies are placed at the front outboard designated seating positions with the test device torso against the seat back and the thighs against the seat cushion. The dummy is centered on the seat cushion of the bucket seat and its midsagittal plane is vertical and longitudinal.

S. 8.1.11.1.1 *Driver position placement.* At the driver's position, the knees of the dummy are initially set 14.5 inches apart, measured between the outer surface of the knee pivot bolt heads, with

the left outer surface 5.9 inches from the midsagittal plane of the dummy. The right foot of the dummy rests on the undepressed accelerator pedal with the heel on the floorpan in the plane of the pedal. If the foot cannot be placed on the accelerator pedal, it is set perpendicular to the tibia and placed as far forward as possible in the direction of the geometric center of the pedal with the heel resting on the floorpan. The plane defined by the femur and tibia centerlines is as close as possible to vertical without inducing torso movement. The left foot is placed flat on the toeboard with the heel resting at the intersection of the toeboard and the floorpan. If the foot cannot be positioned on the toeboard, it is set perpendicular to the tibia and placed as far forward as possible with the heel resting on the floorpan. The femur and tibia centerlines fall in a vertical longitudinal plane except as prevented as contact with a vehicle surface.

S8.1.11.1.2 *Passenger position placement.* At the right front designated seating position, the femur, tibia, and foot centerlines of each of the dummy's legs fall in a vertical longitudinal plane. The feet of the dummy are placed flat on the toeboard with the heels resting at the intersection of the toeboard and the floor pan. If the feet cannot be positioned flat on the toeboard they are set perpendicular to the tibia and are placed as far forward as possible with the heels resting on the floorpan.

S8.1.11.2 *Vehicle equipped with bench seating.* In the case of a vehicle which is equipped with a front bench seat, a dummy is placed at the left front outboard designated seating position and at one of the two other designated seating positions (or at the only other seating position if only one is provided), with the dummy torso against the seat back and the thighs against the seat cushion.

S8.1.11.2.1 *Driver position placement.* The dummy is placed at the left front outboard designated seating position so that its midsagittal plane is vertical and longitudinal, and passes through the center point of the plane described by the steering wheel rim. The legs, knees, and feet of the dummy are placed as specified in S8.1.11.1.1

S8.1.11.2.2 *Center position placement.* If a dummy is placed in the center front designated seating position, it is placed so that its midsagittal plane is vertical and longitudinal, and 19.5 inches to right of midsagittal plane of the dummy at the driver's position. In the case of a vehicle with a drive line tunnel, the left foot of the dummy is placed flat on the floor on the centerline of the vehicle, as far forward as possible without touching any other vehicle component. The left knee is located such that a plane defined by the femur centerline and tibia centerline is as close as possible to the vertical without inducing torso movement. The right foot of the dummy is placed flat on the toeboard immediately to the right side of the tunnel with the left side of the foot against the edge of the tunnel and the heel at the intersection of the toeboard and the floor pan. If the foot cannot be placed flat on the toeboard it is set perpendicular to the tibia and placed as far forward as possible with the heel resting on the floor pan. The right knee is located such that the plane defined by the femur centerline and the tibia centerline is as close as possible to be the vertical without inducing torso displacement or rotation. If the vehicle has no drive line tunnel, leg and foot placement conform to the conditions of S8.1.11.1.2.

S8.1.11.2.3 *Passenger position placement.* The dummy is placed at the right front outboard designated seating position as specified in S.8.1.11.1.2, except that the midsagittal plane of the dummy is vertical, longitudinal, and the same distance from the longitudinal, and the same distance from the longitudinal centerline as the midsagittal plane of the dummy at the driver's position.

S8.1.12 Instrumentation does not affect the motion of dummies during impact or rollover.

S8.1.1.13 The ambient temperature is any level between 66° F. and 78° F.

14. A new section specifying dummy positioning procedures would be added as S10 to read:

S10 *Duminy positioning procedures.* The dummy is positioned on a seat as specified in S10.1 through S10.3 to achieve the conditions of S.8.1.11.

S10.1 *Initial dummy placement.* With the dummy at its designated seating position as described in S8.1.11, place the upper arms against the seat back and tangent to the upper torso and the lower arms and palms against the outside of the thighs.

S10.2 *Dummy settling.* With the dummy positioned as specified in S10.1, slowly lift the dummy in the direction parallel to the plane of the seat back until its buttocks no longer contact the seat cushion or until its head contacts the vehicle roof. Using a flat square surface with an area of 9 square inches, apply a force of 50 pounds against the dummy's torso in the horizontal rearward direction along a line that is coincident with the midsagittal plane of the dummy and 4 inches above the bottom surface of its buttocks. Slowly remove the lifting force.

S10.2.1 While maintaining the contact of the force application plate with the torso, remove as much force as is necessary from the dummy's torso to allow the dummy to return to the seat cushion by its own weight.

S10.2.2 Without removing the force applied to the lower torso, apply additional force in the horizontal, forward direction, longitudinally against the upper shoulders of the dummy sufficient to flex the torso forward until the back above the lumbar spine no longer contacts the seatback. Rock the dummy from side to side three times, so that the dummy spine is at any angle from the vertical of not less than 14 degrees and not more than 16 degrees at the extreme of each movement. With the midsagittal plane vertical, push the upper half of the torso back against the seat back.

S10.3 *Placement of dummy arms and hands.* With the dummy positioned as specified in S10.2, place the arms, elbows, and hands of the dummy, as appropriate for each designated seating position in accordance with S10.3.1 or S10.3.2. Following placement of the limbs, remove the force applied against the lower torso.

S10.3.1 *Driver's position.* Move the upper and the lower arms of the dummy at the driver's position to fully outstretched position in the lowest possible orientation. Push each arm rearward, permitting bending at the elbow, until the palm of each hand contacts the outer part of the rim of the steering wheel at its horizontal centerline. Place the dummy's thumbs over the steering wheel rim, positioning the upper and lower arm centerlines as close as possible to the vertical without inducing torso movement.

S10.3.2 *Passenger position.* Move the upper and the lower arms of the dummy at the passenger position to fully outstretched position in the lowest possible orientation. Push each arm rearward, permitting bending at the elbow, until the upper arm contacts the seat back and is tangent to the upper part of the torso, the palm contacts the outside of the thigh, and the little finger is tangent to the seat cushion.

Interested persons are invited to submit comments on the proposal. Comments should refer to the docket number and be submitted to: Docket Section, National Highway Traffic Safety Administration, Room 5108, 400 Seventh Street, SW., Washington, D.C. 20590. It is requested but not required that 10 copies be submitted.

All comments received before the close of business on the comment closing date indicated below will be considered, and will be available for examination in the docket at the above address both before and after that date. To the extent possible, comments filed after the closing date will also be considered. However, the rulemaking action may proceed at any time after that date, and comments received after the closing date and too late for consideration in regard to the action will be treated as suggestions for future rulemaking. The Department and the agency will continue to file relevant material as it becomes available in the docket after the closing date, and it is recommended that interested person continue to examine the docket for new material.

Comment closing date: August 20, 1976, on the subject of the 1-year extension; October 20, 1976, for all other proposals.

(Secs. 103, 119, Pub. L. 89-563, 80 Stat. 718 (15 U.S.C. 1392, 1407); delegations of authority at 49 CFR 1.50 and 49 CFR 501.8.)

Issued on July 15, 1976.

ROBERT L. CARTER,
Associate Administrator,
Motor Vehicle Programs.

[FR Doc.76-20990 Filed 7-16-76;9:42 am]

notices

This section of the FEDERAL REGISTER contains documents other than rules or proposed rules that are applicable to the public. Notices of hearings and investigations, committee meetings, agency decisions and rulings, delegations of authority, filing of petitions and applications and agency statements of organization and functions are examples of documents appearing in this section.

DEPARTMENT OF HOUSING AND URBAN DEVELOPMENT

Federal Disaster Assistance Administration

[Docket No. D-76-450]

ADMINISTRATOR

Redelegation of Authority

Section A. Pursuant to the authority vested in me to exercise certain of the powers and authorities of the President with respect to Federal disaster assistance pursuant to section 1 of the Executive Order entitled, "Delegating Disaster Relief Functions Pursuant to the Disaster Relief Act of 1974" (EO11795, 39 FR 25939, dated July 11, 1974), and the delegation of authority from the Secretary of Housing and Urban Development (39 FR 28 227, dated August 5, 1974), I hereby redelegate to the Assistant Secretary for Housing-Federal Housing Commissioner subject to published rules and regulation and subject to my notice to proceed:

1. The authority, function and power granted by section 404(a) of the Disaster Relief Act of 1974 (88 Stat. 143, 42 USC 5121n.) to provide either by purchase or lease temporary housing including, but not limited to unoccupied habitable dwellings, suitable rental housing, mobile homes, or other readily fabricated dwellings for those who, as a result of a major disaster, require temporary housing. The authorities to authorize installation of essential utilities at Federal expense and to provide other more economical or accessible sites for mobile homes or other readily fabricated dwellings are reserved to the Administrator, Federal Disaster Assistance Administration.

2. The authority, function and power granted by section 404(b) to provide assistance on a temporary basis in the form of mortgage or rental payments to or on behalf of individuals and families who, as a result of financial hardship caused by a major disaster, have received written notice of dispossession or eviction from a residence.

3. The authority, function and power granted by section 404(c) to provide other types of temporary housing after a major disaster, and to make expenditures for the purpose of repairing or restoring to a habitable condition owner-occupied private residential structures made uninhabitable by a major disaster which are capable of being restored quickly to a habitable condition with minimal repairs. No assistance provided under this section may be used for major reconstruction or rehabilitation of damaged properties.

4. The authority, function and power granted by section 404(d) (1) to sell, notwithstanding any other provision of law, any temporary housing acquired by purchase to individuals and families who are occupants of temporary housing at prices that are fair and equitable. The authority, function and power granted by section 404(d) (2) are reserved to the Administrator, Federal Disaster Assistance Administration.

Sec. B. *Authority to Redelegate.* The Assistant Secretary for Housing-Federal Housing Commissioner may redelegate to employees of the Department of Housing and Urban Development any of the authority delegated in Section A.

Effective date: This redelegation of authority shall be effective on July 1, 1976.

THOMAS P. DUNNE,
Administrator, Federal Disaster Assistant Administration.

[FR Doc.76-20718 Filed 7-16-76;8:45 am]

[Docket No. D-76-448]

REGIONAL DIRECTORS OF FEDERAL DISASTER ASSISTANCE ADMINISTRATION

Redelegation of Authority

The following is an amendment to the existing redelegation from the Administrator of the Federal Disaster Assistance Administration to the Regional Directors of the Federal Disaster Assistance Administration of authority under the Disaster Relief Act of 1974 (Pub. L. 93-288, 42 U.S.C. 5121n.). Most of the authority under the Act was delegated from the President to the Secretary of Housing and Urban Development (E.O. 11795, 39 FR 25939 (July 11, 1974)) and redelegation which authorized the provision of temporary housing assistance under section 404 of the Act, so that authority may be redelegated, in part, to the Assistant Secretary for Housing—Federal Housing Commissioner, HUD.

Effective July 1, 1976, the Redelegation of Authority from the Administrator of the Federal Disaster Assistance Administration to the Regional Directors of the Federal Disaster Assistance Administration, 39 FR 32046, published 9/4/74, amended 11/14/74 at 39 FR 40186, is amended further so that paragraph 5 reads as follows:

5. The authority to provide temporary housing assistance pursuant to section 404 of the Act;

(Disaster Relief Act of 1974 (88 Stat. 143, 42 U.S.C. 5121n.); Sec. 7(d) Department of HUD Act (42 U.S.C. 3535(d); E.O. 11795 (39 F.R. 25939) (July 11, 1974)).

Effective date: This amendment to redelegation of authority is effective on July 1, 1976.

THOMAS P. DUNNE,
Administrator, Federal Disaster Assistant Administration.

[FR Doc.76-20719 Filed 7-16-76;8:45 am]

[Docket No. NFD-347; FDAA-3015-DR]

SOUTH DAKOTA

Amendment to Notice of Emergency Declaration

Notice of Emergency for the State of South Dakota, dated June 17, 1976, is hereby amended to include the following counties among those counties determined to have been adversely affected by the catastrophe declared an emergency by the President in his declaration of June 17, 1976:

The counties of:

Bennett	Pennington
Meade	Perkins

(Catalog of Federal Domestic Assistance No. 14.701, Disaster Assistance.)

Dated: July 8, 1976.

THOMAS P. DUNNE,
Administrator, Federal Disaster Assistance Administration.

[FR Doc.76-20867 Filed 7-16-76;8:45 am]

ENVIRONMENTAL PROTECTION AGENCY

[OPP-42003B; FRL 585-4]

STATE OF IOWA

Extension of Contingency Approval of State Plan for Certification of Pesticide Applicators

In accordance with the provisions of section 4(a)(2) of the Federal Insecticide, Fungicide, and Rodenticide Act (FIFRA), as amended (86 Stat. 973; 7 U.S.C. 136) and 40 CFR Part 171 (39 FR 36445 (October 9, 1974) and 40 FR 11698 (March 12, 1975)), the Honorable Robert D. Ray, Governor of the State of Iowa, submitted a State Plan for Certification of Commercial and Private Applicators of Restricted Use Pesticides to the Environmental Protection Agency (EPA) for approval on a contingency basis, pending promulgation of implementing regulations. On August 28, 1975, the Regional Administrator, EPA Region VII, approved the plan on a contingency basis for a nine-month period. Notice of the approval was published in the FEDERAL REGISTER on September 16, 1975 (40 FR 42774).

Amendments to the 1974 Pesticides Act of Iowa have necessitated changes in the proposed implementing rules and regulations. As a result, on May 20, 1976, the State of Iowa requested a 12-month extension of the Iowa contingency approval pending final implementation of regulations. The Agency finds that there is good cause for approving the request and as such has granted Iowa the one-year extension.

Dated: May 27, 1976.

JEROME H. SVORE,
Regional Administrator.

[FR Doc.76-20840 Filed 7-16-76;8:45 am]

OFFICE OF THE FEDERAL REGISTER

FREEDOM OF INFORMATION INDEX REQUIREMENTS

Guide to Agency Material; January to June 1976

5 U.S.C. 552 (commonly called the Freedom of Information Act) requires agencies to maintain and make available for public inspection and copying current indexes providing identifying information for the public as to any matter issued, adopted, or promulgated after July 4, 1967, and required to be made available or published (5 U.S.C. 552(a)(2)). Recent amendments (Public Law 93-502, Nov. 21, 1974, 88 Stat. 1561) require the publication (with some exceptions) and distribution of these indexes at least quarterly. This guide has been compiled by the Office of the Federal Register from information submitted by agencies for the first 6 months of 1976 in order to notify the public of the availability of these indexes for sale and/or public inspection.[1]

Agency and subagency name	Index title: period covered, brief description of contents	Order from; price; make checks payable to—	For inspection, copying, or additional information contact
Department of Agriculture, Agricultural Stabilization and Conservation Service.	ASCS handbooks: Current listing of all administrative staff manuals.	Director, Data Systems Division, ASCS, USDA, 14th and Independence Ave. SW., Washington, D.C. 20250. No charge.	Director, Data Systems Division, ASCS, USDA, 14th and Independence Ave. SW., Washington, D.C. 20250.
Do	Marketing quota. Review committee determinations; 1969-75; listing by crop-year of all decisions made on marketing quota appeals.	do	Do.
Do	Board of contract appeals decisions; 1969-75; listing of all decisions on appeals affecting ASCS and or CCC.	do	Do.
Do	CCC Board dockets: 1969-75; listing of all Commodity Credit Corporation dockets approved by the Secretary of Agriculture.	do	Do.
Department of Agriculture, Rural Electrification Administration.	Index of current REA publications: Electric Program, as of Apr. 6, 1976, with supplement thereto updating the index to June 30, 1976. An alphabetic and numerical index of REA electric program bulletins, staff instructions, contract forms, and specifications.	Director, Information Services Division, Rural Electrification Administration, U.S. Department of Agriculture, Room 4043 South, Washington, D.C. 20250. No charge.	Director, Information Service Division, Rural Electrification Administration, U.S. Department of Agriculture, Room 4043 South, Washington, D.C. 20250.
Do	Index of current REA publications: Telephone as of Mar. 5, 1976, with supplement thereto updating the index to June 30, 1976. An alphabetic and numerical index of REA telephone program bulletins, staff instructions, contract forms, specifications, sections of the Telephone Engineering and Construction and Telephone Operations manuals, and the rules and regulations of the Rural Telephone Bank.	do	Do.
Department of Defense, Department of the Air Force.	Numerical index of departmental forms (AFR 0-9). Apr. 2, 1976. Lists forms numerically within each category, including accountable forms, forms requiring storage safeguards, and obsolete forms.	DADF at nearest Air Force installation. Shelf stock. $2.78 per copy; reproduced copies, $5.60 per copy; shelf stock will be used while it lasts. Checks payable to: AFO (name of base furnishing copies).	DADF at nearest Air Force installation.
Do	Guide to indexes, catalogs, and lists of departmental publications (AFR 0-1). Sept. 1, 1974. Describes the indexes, catalogs, and lists of departmental publications; explains their use, tells how often they are revised, shows their distribution and gives the office of primary responsibility.	DADF at nearest Air Force installation. Shelf stock, $2.05 per copy; reproduced copies $2 per copy; shelf stock will be used while supply lasts. Checks payable to: AFO (name of base furnishing copies).	Do.
Do	Numerical index of standard publications and recurring periodicals (AFR 0-2). June 6, 1976. Lists regulations, manuals, and pamphlets together under each subject series; lists visual aids and recurring periodicals separately.	DADF at nearest Air Force Installation. Shelf stock. $2.78 per copy; reproduced copies $5.90; shelf stock will be used while supply lasts. Checks payable to: AFO (name of base furnishing copies).	Do.
Do	Miscellaneous Air Force and other Government agency publications (AFR 0-16). Oct. 1, 1974. Lists a wide range of subjects of interest to the Air Force.	DADF at nearest Air Force installation. Shelf stock, $2.09 per copy; reproduced copies, $2.15 per copy; shelf stock will be used while supply lasts. Checks payable to: AFO (name of base furnishing copies).	Do.
Do	Publications Numbering Systems (AFR 5-4). February 15, 1974. Contains subject series and description guide and alphabetical list of subjects.	DADF at nearest Air Force installation. Shelf stock $2.15 per copy, reproduced copies $2.45 per copy; shelf stock will be used while it lasts. Checks payable to: AFO (name of base furnishing copies).	Do.
Do	Disposition of Air Force documentation (AFM 12-50). Oct. 1, 1969. Pt. 2 consists of decision logic tables which provide for disposition of documentation created or accumulated by all Air Force activities. Attachment 3 is an index to the tables, arranged alphabetically by title of the record.	DADF at nearest Air Force installation. Shelf stock will not be used. Pt. 2 is voluminous, therefore, only tables pertaining to requested records will be reproduced. $2. for 1st 6 pages, plus $0.05 for each additional page. Checks payable to: AFO (name of base furnishing copies).	Do.
Department of Defense, Department of the Army, TAGCEN, Army Publications Directorate.	DA pamphlet 310-1: Index of administrative publications (regulations, circulars, pamphlets, posters, general orders, joint chiefs of staff publications.) Basic dated May 1975, with/change 1, Aug. 25, 1975.	Director, Army Publications Directorate, Forrestal Bldg., Washington, D.C. 20314. Price: $4.30. Payable to: Treasurer of United States.	Director, Army Publications Directorate, Forrestal Bldg., Washington, D.C. 20314.
Do	DA pamphlet 310-2: Index of blank forms, May 1974, with/change 1, December 1974.	Director, Army Publications Directorate, Forrestal Bldg., Washington, D.C. 20314. Price: $3.50. Payable to: Treasurer of United States.	Do.
Do	DA pamphlet 310-3: Index of doctrinal, training, and organizational publications (field manuals, reserve officer's training corps manuals, training circulars, Army training programs, Army subject schedules, Army training tests, firing tables and trajectory charts, tables of distribution and allowances). Basic dated May 1975.	Director, Army Publications Directorate, Forrestal Bldg., Washington, D.C. 20314. Price: $3.55. Payable to: Treasurer of United States.	Do.
Do	DA pamphlet 310-4: Index of technical manuals, technical bulletins, supply manuals (types 7, 8, and 9), supply bulletins, and lubrication orders. Basic dated November 1974, with change 1, February 1975.	Director, Army Publications Directorate, Forrestal Bldg., Washington, D.C. 20314. Price: $8.50. Payable to: Treasurer of United States.	Do.
Do	DA pamphlet 310-6: Index of supply catalogs and supply manuals. Basic dated July 1974, with change 1, dated January 1975.	Director, Army Publications Directorate, Forrestal Bldg., Washington, D.C. 20314. Price: $3.50. Payable to: Treasurer of United States.	Do.

[1] Annual Guide for 1975 appeared at 41 F.R. 4678, Jan. 30, 1976.

Agency and subagency name	Index title: period covered, brief description of contents	Order from; price; make checks payable to—	For inspection, copying, or additional information contact
Defense Civil Preparedness Agency:	Publications catalog, MP-20: A listing of publications and other printed matter on the U.S. Civil Defense program available to the public. Contains a brief resume of each 1 and provides information on where to obtain.	U.S. Army Publications Center, Civil Preparedness Branch, 2800 Eastern Blvd. (Middle River), Baltimore, Md. 21220. No charge.	DCPA Headquarters, Room 1D511, Pentagon Bldg., Washington, D.C. 20301 or DCPA regional offices as shown at app. C, pt. 1913, ch. XVIII, title 32, CFR.
Do	DCPA manual 5450.2: Index of DCPA instructions and manuals, a listing, both numerical and subjective, of the Agency instructions announcing policy, outlining programs, and prescribing internal operating procedures.	do	Do.
Defense Communications Agency:	1. DCA circulars and notices: Enclosure 1 consists of 2 sections. Section A contains the index of current DCA circulars and notices and those circulars, notices, and changes published during the period July 1 to Dec. 31, 1975, are highlighted by a number sign (#) in the left margin. Section B contains a listing of those publications which have been canceled or replaced since July 1, 1975, by a publication of a different number. Publications superseded by a revised issue bearing the same number are not included. Enclosure 2 is an alphabetical listing of current DCA notices. 2. DCA instructions: Enclosure 1 consists of 2 sections. Section A contains the index of current DCA instructions and those instructions and changes published during the period Oct. 1, 1975 to Mar. 31, 1976, are highlighted by a number sign (#) in the left margin. Section B contains a listing of those instructions which have been canceled or replaced by an instruction of a different number since Oct. 1, 1975. Enclosure 2 is an alphabetical listing of current DCA instructions.	Defense Communications Agency, Washington, D.C. 20305. No charge.	Defense Communications Agency, 8th St. and South Courthouse Rd., Arlington, Va. 22204.
Defense Nuclear Agency	Index to administrative publications, May 10, 1976, with changes. Description: Administrative instructions covering manpower, personnel, international programs, planning and readiness, R. & D., logistics, maintenance, transportation, general administration, organization and function, security, administrative services, public information, legal and legislative policies, comptrollership, budgeting, appropriations accounting and control, auditing, and reports control.	Defense Nuclear Agency, Attention: PAO, Washington, D.C. 20305. $1 by xerox, $0.35 by printing run. Payable to: Treasurer of the United States.	
Do	Government reports index: Biweekly, annual cumulation. Description: Indexes DNA and other Government-sponsored research and development reports prepared by Federal agencies or their contractors.	National Technical Information Service, Springfield, Va. 22161. $125 annual subscription rate. Payable to National Technical Information Service.	Director, Defense Nuclear Agency, Technical Library, Washington, D.C. 20305.
Defense Nuclear Agency, Armed Forces Radiobiology Research Institute.	Index of Armed Forces Radiobiology Research Institute (AFRRI) instructions, Mar. 27, 1974, with changes. Description: Listing of all AFRRI instructions in force.	Director, Armed Forces Radiobiology Research Institute, Attention: Administrative Officer, Defense Nuclear Agency, National Naval Medical Center, Bethesda, Md. 20014. 9 pages at $0.05 per page ($0.45). Checks payable to Treasurer of the United States.	
Defense Nuclear Agency, field command:	FCDNA instruction 5025.8. Dec. 31, 1975 with changes. Description: Current index to field command instructions.	Field Command, Defense Nuclear Agency, Attention: Security Specialist, Support Directorate, Kirtland AFB, N. Mex. 87115. No charge.	
Defense Supply Agency	DSAH 5025.1, pt. I: Defense Supply Agency index of publications, January 1976, provides an alphabetical and numerical listing of DSA and DOD publications applicable to the Defense Supply Agency.	HQ DSA (DSAH-XMD), Bldg. 6, Door 20, Cameron Station, Alexandria, Va. 22314. Price: $2 minimum fee per order, plus $0.01 per printed page. Payable to: Defense Supply Agency.	HQ DSA, Attention: DSAH-XA; Room 4D435, Cameron Station, Alexandria, Va. 22314.
Do	DSAH 5025.1, Pt. III: Index of Federal catalog system publications, January 1976, provides a numerical listing of cataloging handbooks, Federal item identification guides, identification lists, master cross-reference lists, and related publications.	Defense Logistics Services Center, Attention: DLSC-AP, Federal Center, Battle Creek, Mich. 49016. Price: $2 minimum fee per order, plus $0.01 per printed page. Payable to: U.S. Treasury Department.	Defense Logistics Services Center, Attention: DLSC-TD, Room 1-9-7, Federal Center, Battle Creek, Mich. 49016.
Do	DSAH 5025.6: Index of forms, January 1976, is a listing of DSA and DD forms used by DSA.	HQ DSA (DSAH-XMD), Bldg. 6, Door 20, Cameron Station, Alexandria, Va. 22314. Price: $2 minimum fee per order, plus $0.01 per printed page. Payable to: Defense Supply Agency.	HQ DSA, Attention: DSAH-XA; Room 4D435, Cameron Station, Alexandria, Va. 22314.
Defense Supply Agency, Defense General Supply Center:	Index of publications: Current listing of policy statements, regulations, handbook, manuals, directives, letters, supplements, procedures, and clause manual.	Commander, Defense General Supply Center, attention of DGSC-B, Richmond, Va. Reproduced copies $2. Treasurer of the United States.	Public Affairs Officer, Defense General Supply Center, Richmond, Va. 23297.
Department of Health, Education, and Welfare, Public Health Service, Alcohol, Drug Abuse, and Mental Health Administration:	The ADAMHA Freedom of Information Act Index is comprised of various ADAMHA component program guidelines, handbook listings, policy supplements, instructions, and manual materials. The index is divided to reflect the various ADAMHA components, namely the National Institute on Alcohol Abuse and Alcoholism, the National Institute on Drug Abuse, the National Institute of Mental Health, including Saint Elizabeths Hospital, and the Office of the Administrator.	Copies of the ADAMHA Freedom of Information Act index are maintained by the HEW, FOI Officer, Room 5300, HEW North Bldg., 330 Independence Ave., SW., Washington, D.C. 20201. ADAMHA will also make copies available if requests are forwarded to: Director, OCPA, ADAMHA, Parklawn Bldg., Room 10-65, 5600 Fishers Lane, Rockville, Md. 20852. Fees are 10¢ per page with the charge being made if the total amount exceeds $5 and are payable to Treasurer of the United States.	Director, Office of Communications and Public Affairs, Parklawn Bldg., Room 10-65, 5600 Fishers Lane, Rockville, Md. 20852.

Agency and subagency name	Index title: period covered, brief description of contents	Order from; price; make checks payable to—	For inspection, copying, or additional information contact
Department of Health, Education, and Welfare, Public Health Service, Center for Disease Control (HEW/PHS/CDC).	A written description of the general preventive medicine residency program, dated Apr. 29, 1976. Residency assignments, qualifications, appointments, and supervision, as outlined in this document.	Center for Disease Control, Attention: Assistant Director for Operations, Atlanta, Ga. 30333. No charge for 1 copy.	Center for Disease Control, Assistant Director for Operations, 1600 Clifton Rd. NE., Atlanta, Ga. 30333.
Do	Memorandum dated July 7, 1975. Subject: Medical care, resource personnel. This is the written procedure for handling telephone calls regarding the medical care of certain individuals.	Center for Disease Control, Attention: Director, Office of Biosafety, Atlanta, Ga. 30333. No charge for 1 copy.	Center for Disease Control, Office of Biosafety, 1600 Clifton Rd. NE., Atlanta, Ga. 30333.
Do	Memorandum dated Apr. 27, 1976. Subject: Hot line, 633-5313. This is the written procedure for handling reports of damage to packages of infectious materials.	do	Do.
Do	Staff publications booklet: An annual bibliographical listing of contributions made by the CDC staff to medical and scientific literature during the previous year.	Center for Disease Control, Attention: Director, Office of Information, Atlanta, Ga. 30333. No charge for 1 copy.	Center for Disease Control, Office of Information, 1600 Clifton Rd. NE., Atlanta, Ga. 30333.
Do	Delegations of procurement authority within CDC. Statements dated Oct. 5, 1973, and June 6, 1974.	Center for Disease Control, Attention: Director, Procurement and Grants Office, Atlanta, Ga. 30333. No charge for 1 copy.	Center for Disease Control, Procurement and Grants Office, 1600 Clifton Rd. NE., Atlanta, Ga. 30333.
Do	Guidelines to assist CDC program personnel in initiating requests for negotiated contracts. Document dated December 1974.	do	Do.
Do	Minutes of meetings and annual reports of following public advisory committees: Coal Mine Health Research Advisory Committee, Safety and Occupational Health Study Section, Immunization Practices Advisory Committee, Medical Laboratory Services Advisory Committee, Tuberculosis Control Advisory Committee.	Center for Disease Control, Attention: Director, Management Analysis Office, Atlanta, Ga. 30333. No charge for 1 copy.	Center for Disease Control, Management Analysis Office, 1600 Clifton Rd. NE., Atlanta, Ga. 30333.
Do	Morbidity and mortality weekly reports. In addition to providing informational morbidity and mortality data on diseases, these reports prescribe policies and interpret policies relative to prevention of diseases as well as health requirements that are covered by regulations.	Center for Disease Control, Attention: Director, Bureau of Epidemiology, Atlanta, Ga. 30333. No charge for 1 copy.	Center for Disease Control, Bureau of Epidemiology, 1600 Clifton Rd. NE., Atlanta, Ga. 30333.
Do	Annual report to Congress regarding smoking and health.	Center for Disease Control, Attention: Director, Bureau of Health Education, Atlanta, Ga., 30333. No charge for 1 copy.	Center for Disease Control, Bureau of Health Education, 1600 Clifton Rd. NE., Atlanta, Ga. 30333.
Do	"Current Items". This publication from the Bureau of Laboratories is directed generally to heads of State or local laboratories. The publication includes technical procedures and informational data.	Center for Disease Control, Attention: Director, Bureau of Laboratories, Atlanta, Ga. 30333. No charge for 1 copy.	Center for Disease Control, Bureau of Laboratories, 1600 Clifton Rd. NE. Atlanta, Ga. 30333.
Do	National Institute for Occupational Safety and Health (NIOSH) policy memorandum, dated Sept. 11, 1974, on trade secret information.	Director, National Institute for Occupational Safety and Health, Park Bldg., Room 3-30, 5600 Fishers Lane, Rockville, Md. 20852. No charge for 1 copy.	Director, National Institute for Occupational Safety and Health, Park Bldg., Room 3-30, 5600 Fishers Lane, Rockville, Md. 20852.
Do	"NIOSH Policy Letter", dated Nov. 5, 1973, regarding reimbursement to an employer for financial loss (production time; pay) incurred as a result of a NIOSH research project.	do	Do.
Do	The President's report on occupational safety and health, annual report for 1973. This report covers programs of the Department of Labor; Department of Health, Education, and Welfare; and the Occupational Safety and Health Review Commission for calendar year 1973. It contains results of the 1st full year of occupational injury and illness survey.	do	Do.
Do	The Federal coal mine health program in 1973. This is a report of health activities under the Federal Coal Mine Health and Safety Act of 1969.	do	Do.
Do	The Division of Training, National Institute for Occupational Safety and Health, Center for Disease Control, announcement of courses that are available to the public. HEW publication No. (NIOSH) 75-170.	do	Do.
Do	The National Institute for Occupational Safety and Health current intelligence bulletin. This current bulletin alerts members of the occupational health community, government, labor, and industry to new information on potential occupational health hazards.	do	Do.
Do	Proposed interim program guidelines for venereal disease control, dated March 1975.	Center for Disease Control, Attention: Director, Bureau of State Services, Atlanta, Ga. 30333. No charge for 1 copy.	Center for Disease Control, Bureau of State Services, 1600 Clifton Rd. NE., Atlanta, Ga. 30333.
Do	Venereal disease review criteria, dated Dec. 10, 1971.	do	Do.
Do	Recommended treatment schedules for syphilis, dated 1976.	do	Do.
Do	Gonorrhea, CDC recommended treatment schedules, dated 1974.	do	Do.
Do	Commentary on national strategies to control gonorrhea, dated July 1975.	do	Do.
Do	Program guidelines for the influenza immunization project grants, dated Apr. 14, 1976.	do	Do.
Do	Community-wide influenza campaign, achieving public response.	do	Do.
Do	Influenza immunization operations workbook, dated May 1976.	do	Do.
Do	Recommendation of the Public Health Service Advisory Committee on Immunization Practices. Influenza vaccine, preliminary statement, dated May 25, 1976.	do	Do.
Do	Supplemental guidelines on informed consent for influenza immunization project grants, dated June 21, 1976.	do	Do.
Do	Guidelines for assessing immunity levels, dated November 1973.	do	Do.

Agency and subagency name	Index title: period covered, brief description of contents	Order from; price; make checks payable to—	For inspection, copying, or additional information contact
Do	Immunization Against Disease, 1972 handbook.	do	Do.
Do	Directions for use of PHS PPD products for use in tuberculosis control programs, dated January 1971.	do	Do.
Do	Recommendation of the Public Health Service Advisory Committee on Immunization Practices, BCG vaccines, dated February 1975.	do	Do.
Do	Preventive therapy of tuberculosis infection, dated February 1975.	do	Do.
Do	Memorandum dated Nov. 7, 1975, regarding duration of preventive therapy with isoniazid.	do	Do.
Do	Summary of the report of the Ad Hoc Advisory Committee on Isoniazid and Liver Disease, dated Mar. 19, 1971.	do	Do.
Do	Memorandum dated Nov. 15, 1971, regarding tuberculin PPD-T distributed by CDC.	do	Do.
Do	Statement on preventive treatment of tuberculosis, dated June 25, 1971.	do	Do.
Do	Concepts and evaluation measures recommended by an ad hoc committee on evaluation of tuberculosis, dated September 1971.	do	Do.
Do	Memorandum dated Jan. 13, 1972, regarding PPD-tuberculin and PPD-Battey distributed by CDC.	do	Do.
Do	Memorandum dated Nov. 21, 1972. Subject: Liver disease among recipients of isoniazid chemoprophylaxis under special surveillance—preliminary report.	do	Do.
Do	Memorandum dated Dec. 15, 1972. Subject: Liver disease among recipients of isoniazid chemoprophylaxis under special surveillance—followup report.	do	Do.
Do	Memorandum dated Jan. 23, 1973. Subject: Liver disease among recipients of isoniazid chemoprophylaxis under special surveillance—followup report.	do	Do.
Do	Memorandum dated Jan. 29, 1973, regarding PPD-tuberculin and atypical mycobacterial PPD antigens.	do	Do.
Do	Guidelines for prevention of TB transmission in hospitals, dated September 1974.	do	Do.
Do	Suggested tuberculosis nurse functions in a nurse directed clinic, dated April 1974.	do	Do.
Do	Recommendations for health department supervision of tuberculosis patients—MMWR, dated Feb. 23, 1974.	do	Do.
Do	Equipment and procedures for erythrocyte protoporphyrin (EP) analysis as a screening method for pediatric lead poisoning, dated Feb. 3, 1975.	do	Do.
Do	Urban rat survey—guidelines for classroom use and field training of inspectors who serve in community rodent control programs, dated March 1974.	do	Do.
Do	Urban rat control project grants program guidelines for applicants, dated 1975.	do	Do.
Do	Guidelines for grant applications for childhood lead-poisoning control, dated May 1973.	do	Do.
Do	Policy statement—laboratories performing blood lead determination for community programs receiving lead-based paint poisoning grant funds, dated 1972.	do	Do.
Do	Increased lead absorption and lead poisoning in young children. A statement by the Center for Disease Control, dated March 1975.	do	Do.
Do	Policy and procedures for shipping and lending federally owned XRF analyzers, Mar. 23, 1973.	do	Do.
Do	The "Training Bulletin," which is published every 18 mo. This document lists each of the headquarters, field, or home-study courses that are available through the auspices of CDC during that time period. Specific information is presented that identifies prerequisites for attendance and describes the nature of each course.	Center for Disease Control Attention: Director, Bureau of Training, Atlanta, Ga. 30333. No charge for 1 copy.	Center for Disease Control, Bureau of Training, 1600 Clifton Rd. NE., Atlanta, Ga. 30333.
Do	Final denials, revocations, suspensions and limitations of licenses, and letters of exemptions to laboratories subject to the Clinical Laboratories Improvement Act of 1967.	Center for Disease Control, Attention: Bureau of Laboratories, Atlanta, Ga. 30333. No charge for 1 copy.	Center for Disease Control, Bureau of Laboratories, 1600 Clifton Rd. NE., Atlanta, Ga. 30333.
Do	Administrative issuance. Facilities Engineering and Construction Manual, ch. CDC: 3-335, dated May 1, 1972. This issuance provides rules and regulations covering CDC buildings and grounds. It applies to CDC employees and also to visitors, solicitors, etc.	Center for Disease Control, Attention: Management Analysis Office, Atlanta, Ga. 30333. No charge for 1 copy.	Center for Disease Control, Management Analysis Office, 1600 Clifton Rd. NE., Atlanta, Ga. 30333.
Do	Administrative issuance. Manual Guide—General Administration No. CDC-57, dated Nov. 13, 1970. This issuance provides policy and procedures to CDC employees for claims including those against CDC or against CDC employees as a result of their official duties.	do	Do.
Do	Administrative issuance. Manual Guide—General Administration No. CDC-1, dated Sept. 3, 1970. This issuance provides policy and procedures for conferences including those cosponsored by CDC and an organization other than a Federal agency.	do	Do.

Agency and subagency name	Index title: period covered, brief description of contents	Order from; price; make checks payable to—	For inspection, copying, or additional information contact
Do.	Administrative issuance. Manual Guide—ADP Systems No. CDC-1, dated Apr. 22, 1971. This issuance specifies the type of information for CDC organizations to furnish CDC computer systems office for determination as to whether a contract should be entered into with an outside source to perform the ADP services or whether the work can be performed within the Center.	do.	Do.
Do.	Administrative issuance. CDC General Memorandum No. 74-9, dated June 20, 1974. This issuance specifies rates for the Center to pay for blood.	do.	Do.
Do.	Administrative issuance. Procurement Manual Subpart CDC: 3-75.3, dated May 12, 1972. This issuance specifies CDC delegations of authority for publication of advertisements, notices, or proposals.	do.	Do.
Do.	Administrative issuance. Manual Guide—Printing Management No. CDC-6, dated Nov. 5, 1969. This issuance provides CDC policies and procedures for procurement of CDC authored articles which are to be published in private journals and briefly mentions publishers' services, e.g., setting of type, sending proofs, etc.	do.	Do.
Do.	Administrative issuance. National Institute for Occupational Safety and Health Administrative Issuance No. 406, dated Sept. 3, 1974. This issuance describes contents and documentation needed for research and technical services contract requests for NIOSH.	do.	Do.
Do.	Administrative issuance. Procurement Manual Subpart CDC: 3-3.6, dated Sept. 21, 1970. This issuance prescribes CDC policies and procedures for small purchases particularly through use of imprest funds, and briefly mentions vendors' role.	do.	Do.
Do.	Administrative issuance. CDC General Memorandum No. 75-8, dated July 1, 1975. This issuance provides instructions to CDC employees for obtaining typewriter repair service and lists individual companies under contract to make repairs.	do.	Do.
Do.	Administrative issuance. CDC General Memorandum No. 74-1, dated Jan. 16, 1974. This issuance specifies CDC policies and procedures on unauthorized commitments and for obtaining approval for such commitments.	do.	Do.
Do.	Administrative issuance. Manual Guide—General Administration No. CDC-52, dated Mar. 12, 1973. This issuance provides policies and procedures for handling public inquiries to CDC during nonwork hours.	do.	Do.
Do.	Administrative issuance. Manual Guide—General Administration No. CDC-18, dated Mar. 6, 1969. This issuance provides CDC policies and procedures for obtaining clearance of CDC authored manuscripts, publications, etc., and includes policy on responding to requests from the press, etc.	do.	Do.
Do.	Administrative issuance. CDC General Memorandum No. 72-3, dated Feb. 9, 1972. This issuance provides policies and general guidelines to CDC employees on giving assurances of confidentiality in obtaining information from the public.	do.	Do.
Do.	Administrative issuance. Manual Guide—Personal Property Management No. CDC-2, dated Apr. 17, 1969. This issuance provides CDC policies and procedures for producing, maintaining, shipping, and storing exhibits and includes procedures for production of exhibits by commercial contractors.	do.	Do.
Do.	Administrative issuance. Manual Guide—Safety Management No. CDC-19, dated Mar. 18, 1974. This issuance provides policy to CDC employees for distribution of cultures of microbial agents and of vectors to non-CDC persons.	do.	Do.
Do.	Administrative issuance. Manual Guide—Safety Management No. CDC-2, dated Apr. 22, 1969. This issuance provides policy on the need for and use of hazard warning signs that applies to CDC employees and also to visitors.	do.	Do.
Do.	Administrative issuance. Manual Guide—Safety Management No. CDC-3, dated June 8, 1973. This issuance provides policies on and procedures for handling compressed gases in cylinders. It applies to CDC employees and also certain policies and procedures apply to vendors.	do.	Do.
Do.	Administrative issuance. Personnel Guides for Supervisors, chapter IV, CDC Guide 7-2, dated Mar. 12, 1963, but still current. This issuance provides CDC policies and procedures for handling complaints on employee indebtedness.	do.	Do.

Agency and subagency name	Index title: period covered, brief description of contents	Order from; price; make checks payable to—	For inspection, copying, or additional information contact
Do	Administrative issuances. Manual Guide—General Administration No. CDC-5, dated Apr. 8, 1971 and National Institute for Occupational Safety and Health Administrative Issuance No. 2, dated Mar. 4, 1974. These issuances provide policies and procedures for making CDC and NIOSH facilities available to guest researchers.	do	Do.
Do	Administrative issuance. Manual Guide—General Administration No. CDC-01, dated Apr. 26, 1973. This issuance provides CDC policies and procedures for providing to students work experiences which relate to the CDC mission and to the educational objectives of the students.	do	Do.
Do	Administrative issuance. National Institute for Occupational Safety and Health unnumbered memorandum, dated Mar. 4, 1974. This issuance provides NIOSH policy on loan of property to non-Federal persons or institutions.	do	Do.
Do	Administrative issuances. Manual Guide—General Administration No. CDC-11, dated June 8, 1973 and National Institute for Occupational Safety and Health policy memorandum, dated June 25, 1973. These issuances provide policies and procedures for the protection of the individuals who are participating or involved in research investigations of the Center and of NIOSH, respectively.	do	Do.
Do	Administrative issuance. Manual Guide—Travel CDC-10, dated Dec. 20, 1972. This issuance provides CDC policy and procedures for employees renting automobiles for official travel and mentions services provided by the car rental contractors and the conditions of the contracts.	do	Do.
Do	Administrative issuances. Manual Guide—Travel No. CDC-2 and Correspondence Manual Chapter 10-40, dated Jan. 14, 1974. These issuances provide instructions to CDC employees for making reservations on common carriers and for picking up the tickets. They list the airlines and their telephone numbers.	do	Do.
Do	Administrative issuance. CDC general memorandum No. 75-12, Privacy Act, dated Sept. 25, 1975. This issuance provides general information to CDC employees on the act.	do	Do.
Do	Administrative issuance. CDC general memorandum No. 75-10, Freedom of Information Act, dated July 25, 1975. This issuance provides general information to CDC employees on major provisions of the act, procedures for responding to requests for information under the act, and brief data to the CDC employees on the Privacy Act.	do	Do.
Do	Administrative issuance. CDC general memorandum No. 75-2, civil defense, dated April 2, 1975. This issuance provides information on the civil defense capacity and equipment of the CDC facilities in the Atlanta area that are officially designated to be used as public shelter areas under the national fallout shelter program.	do	Do.
Do	Administrative issuance. CDC unnumbered memorandums, parking at Clifton Rd. facilities, dated July 14, 1975 and Jan. 20, 1976. These issuances provide policy for CDC employees and visitors parking at the Clifton Rd. facilities, Center for Disease Control.	do	Do.
Do	Administrative issuance. CDC unnumbered memorandum, directory of licensed day-care facilities in the Metropolitan Atlanta area, dated Mar. 15, 1976. This issuance provides a listing of these facilities.	do	Do.
Do	Administrative issuance. CDC unnumbered memorandum, injury compensation, dated Sept. 15, 1975. This issuance provides procedures for CDC employees to follow to document on-the-job traumatic injuries, including submission of reports from attending physicians.	do	Do.
Do	Administrative issuance. Manual guide—general administration No. CDC-8, soliciting, vending, and displaying or distributing commercial advertising within CDC, dated Apr. 23, 1975. This issuance provides policy for soliciting, vending, and commercially advertising on property occupied by CDC.	do	Do.
Do	Administrative issuance. Personnel guide for supervisors, ch. III, CDC guide 1-2, commercial employment offices, dated Jan. 7, 1976. This issuance provides policy on using commercial employment offices for recruiting personnel.	do	Do.
Do	Administrative issuance. Personnel guide for supervisors, ch. III, CDC guide 1-9, dated Feb. 26, 1976. This issuance provides policies, responsibilities, and procedures for the selective placement program for handicapped employees and disabled veterans.	do	Do.

Agency and subagency name	Index title: period covered, brief description of contents	Order from; price; make checks payable to—	For inspection, copying, or additional information contact
Do.	Administrative issuance. National Institute for Occupational Safety and Health Administration, issuance No. 6, dated Apr. 15, 1976. This issuance provides policies and procedures for keeping interested governmental, labor, and management groups informed on the initiation and progress of NIOSH field studies.	do.	Do.
Do.	Administrative issuance. National Institute for Occupational Safety and Health Administration, issuance No. 8, dated Oct. 30, 1975. This issuance provides procedures for maintenance of minutes of NIOSH meetings with representatives of nongovernmental groups.	do.	Do.
Department of Health, Education, and Welfare, Food and Drug Administration (DHEW/FDA).	Administrative Guidelines Manual. Jan. 1, 1973. Provides guidance to personnel responsible for regulatory decisions. Contains regulatory tolerances and guidance, and authorization for direct action by the field in areas of seizure, citation, and prosecution.	Supervisor, Public Records and Documents Center (HFC-18), 5600 Fishers Lane, Rockville, Md. 20852. No charge.	Supervisor, Public Records and Documents Center (HFC-18), Room 4-62, FDA, 5600 Fishers Lane, Rockville, Md. 20852.
Do.	Bureau of Foods Staff Manual Guide. Primarily concerned with the preparation of and review of documents within the Bureau of Foods.	Supervisor, Public Records and Documents Center (HFC-18), 5600 Fishers Lane, Rockville, Md. 20852. $10. Checks payable to Food and Drug Administration.	Do.
Do.	Bureau of Drugs staff manual guide. Primarily concerned with the preparation of and review of documents within the Bureau of Drugs.	Supervisor, Public Records and Documents Center (HFC-18), 5600 Fishers Lane, Rockville, Md. 20852. $21.50. Checks payable to Food and Drug Administration.	Do.
Do.	Compliance Policy Guides. Provides a system for the issuing, filing, and retrieval of all official statements of FDA compliance policy.	Supervisor, Public Records and Documents Center (HFC-18), 5600 Fishers Lane, Rockville, Md. 20852. No charge.	Do.
Do.	Compliance Program Guidance Manual. Provides general guidance to the field as to how certain industries will be inspected, sampled, etc., during a fiscal year. Programs within this manual assign the number of inspections or samples to be done within a specific industry. Over 3,000 pages.	Supervisor, Public Records and Documents Center (HFC-18), 5600 Fishers Lane, Rockville, Md. 20852. 10 cents per page. (Suggest before ordering, to request transmittal checklist to ascertain programs needed.) Checks payable to Food and Drug Administration.	Do.
Do.	Drug autoanalysis manual. Provides content uniformity test specifications in USP XVII and NFX II. Provides assurance of homogeneity within a single lot for a safe and effective drug supply. Specifications are for all tablet monographs where the active ingredient is present in low quantities (usually 50 mg or less).	Supervisor, Public Records and Documents Center (HFC-18), 5600 Fishers Lane, Rockville, Md. 20852. No charge.	Do.
Do.	ERDO data code manual. Lists computer code information for programs management system project (PMS) which is used for reporting project information into the program oriented data system (PODS).	Supervisor, Public Records and Documents Center (HFC-18), 5600 Fishers Lane, Rockville, Md. 20852. $15. Checks payable to Food and Drug Administration.	Do.
Do.	Field management directives. Used by the field staff to transmit FDA field policy in the areas of operations management, planning and budget guidance, program management, and State program management which gives policy information.	do.	Do.
Do.	Food additives analytical manual. Presents a compilation of analytical methodology for additives authorized for use. Compilation consists of methods for additives which can be used only as permitted in foods for human consumption and in feeds and drinking water of animals or treatment of food-producing animals.	Supervisor, Public Records and Documents Center (HFC-18), 5600 Fishers Lane, Rockville, Md. 20852. No charge.	Do.
Do.	Hazard Analysis and Critical Control Point—A System for Inspection of Food Processors. Explains the hazard analysis and critical control point procedure. Used for overseeing industry's processing practices in order to provide the consumer with the best assurances possible of quality control in processing foods.	Supervisor, Public Records and Documents Center (HFC-18), 5600 Fishers Lane, Rockville, Md. 20852. $131.95. Checks payable to Food and Drug Administration.	Do.
Do.	Inspector Operations Manual. Provides FDA personnel with standard operating inspectional and investigational procedures. Contains instructions needed by operating inspectors and investigators. Contains authorities, objectives, responsibilities, policies, and guides.	Supervisor, Public Records and Documents Center (HFC-18), 5600 Fishers Lane, Rockville, Md. 20852. $25. Checks payable to Food and Drug Administration.	Do.
Do.	Inspector Training Manual. Basic training manual for food and drug inspectors and inspection technicians to provide the field with uniform approach to the administration of basic training.	Supervisor, Public Records and Documents Center (HFC-18), 5600 Fishers Lane, Rockville, Md. 20852. $15. Checks payable to Food and Drug Administration.	Do.
Do.	Inspector's Manual for State Food and Drug Officials. Divided into 2 parts (1) Operations manual with information applicable to sample collection, inspections, and investigations in all fields of food and drug work; (2) commodities manual divided into specific types of food commodities. Manual for official use of State and local food and drug enforcement officers only.	Supervisor, Public Records and Documents Center (HFC-18), 5600 Fishers Lane, Rockville, Md. 20852. $65. Checks payable to Food and Drug Administration.	Do.
Do.	Inspector's Technical Guide. To provide a medium for making all FDA inspectors aware of selected technical information not previously available on a broad scale.	Supervisor, Public Records and Documents Center (HFC-18), 5600 Fishers Lane, Rockville, Md. 20852. $5.20. Payable to Food and Drug Administration.	Do.
Do.	Instrument Operations Manual. Provides guidelines for analysis by instrumentation using the gas chromatograph, atomic absorption, nuclear magnetic resonance, and mass spectrograph. Provides brief, concise, operating instructions augmenting manufacturers' manuals.	Supervisor, Public Records and Documents Center (HFC-18), 5600 Fishers Lane, Rockville, Md. 20852. $25. Checks payable to Food and Drug Administration.	Do.

Agency and subagency name	Index title: period covered, brief description of contents	Order from; price; make checks payable to—	For inspection, copying, or additional information contact
Do.	Laboratory Operations Manual. Provides day-to-day guide for laboratory directors and supervisors. Reflects the science advisor program and district laboratory relationships with BDAC field offices and disposition of consumer complaint samples.	Supervisor, Public Records and Documents Center (HFC-18), 5600 Fishers Lane, Rockville, Md. 20852. $17.50. Checks payable to Food and Drug Administration.	Do.
Do.	Pesticide Analytical Manual. Brings together the procedures and methods used in the FDA laboratories for surveillance of the extent and significance of contamination of man and his environment by pesticides and their metabolites.	Supervisor, Public Records and Documents Center (HFC-18), 5600 Fishers Lane, Rockville, Md. 20852. No charge.	Do.
Do.	Quantity of contents compendium. Used to measure acceptable levels of shrinkage in food containers. Manual divided into 2 parts: (1) Contains procedures for measuring fill-of-container, statistical evaluation acceptable common or usual declaration of quantity of contents; (2) contains information on sampling where special techniques are required.	Supervisor, Public Records and Documents Center (HFC-18), 5600 Fishers Lane, Rockville, Md. 20852. $25. Checks payable to Food and Drug Administration.	Do.
Do.	Regulatory Procedures Manual. Provides guidance on regulatory policy and supporting processing procedures.	Supervisor, Public Records and Documents Center (HFC-18), 5600 Fishers Lane, Rockville, Md. 20852. $85. Checks payable to Food and Drug Administration.	Do.
Do.	Staff Manual Guides—Organization and Delegations. Contains directives issued by the Food and Drug Administration to establish policy, organization, procedures or responsibilities in the administrative area. Used to issue continuing instructions or information and remains in effect until rescinded or superseded.	Supervisor, Public Records and Documents Center (HFC-18), 5600 Fishers Lane, Rockville, Md. 20852. Vol. I, $60; Vol. II, $60; Vol. III, $30. Checks payable to Food and Drug Administration.	Do.
Do.	Supervisory Inspectors Guide. Designed to furnish supervisory inspectors with guidelines to assist them in performing their duties.	Supervisor, Public Records and Documents Center (HFC-18), 5600 Fishers Lane, Rockville, Md. 20852. $28.50. Checks payable to Food and Drug Administration.	Do.
Do.	Vitamin Analytical Manual. For use and guidance of analytical chemists who are assigned to assay vitamin products offered for human and for animal use.	Supervisor, Public Records and Documents Center (HFC-18), 5600 Fishers Lane, Rockville, Md. 20852. No charge.	Do.
Do.	Index to Administrative Staff Manuals. Current listing of all staff manuals with indexes and/or table of contents and costs.	Supervisor, Public Records and Documents Center (HFC-18), 5600 Fishers Lane, Rockville, Md. 20852. $20. Checks payable to Food and Drug Administration.	Do.
Do.	Statements of policy and interpretations adopted by FDA and not published in the FEDERAL REGISTER.	Supervisor, Public Records and Documents Center (HFC-18), 5600 Fishers Lane, Rockville, Md. 20852. $5.90. Payable to Food and Drug Administration.	Do.
Do.	Extracts from annual subject indexes published by the FEDERAL REGISTER relating to food and drugs from 1967 to date.	Supervisor, Public Records and Documents Center (HFC-18), 5600 Fishers Lane, Rockville, Md. 20852. $11.50. Payable to Food and Drug Administration.	Do.
Department of Health, Education, and Welfare, Public Health Service, Health Resources Administration (DHEW/PHS/HRA).	Health Resources Administration index of policy documents as required by Public Law 90-23 (Freedom of Information). July 1, 1973, to Mar. 1, 1976. The HRA FOIA index is a listing of the following HRA documents: HRA policy, information, and instruction memoranda; supplements and circulars to the Federal personnel and HEW staff manuals; Federal regulations; delegations of authority; organization and functions statements; programmatic circulars, memoranda, instructions, notices, guides, guidelines, and operating manuals used by HRA components.	Associate Administrator, Office of Communications, Health Resources Administration, Room 10A-31, Parklawn Bldg., 5600 Fishers Lane, Rockville, Md. 20852. Fees, as prescribed in 45 CFR 5.61, are 10c per page with the charge being made if the total amount exceeds $5. Check payable to DHEW-Health Resources Administration.	Associate Administrator, Office of Communications, Health Resources Administration Room 10A-31, Parklawn Bldg., 5600 Fishers Lane, Rockville, Md. 20852, (301) 443-1620.
Department of Health, Education, and Welfare, Public Health Service, Health Services Administration (DHEW/PHS/HSA).	HSA Freedom of Information Act (FOIA) Index: March 1975 to March 1976. The HSA FOIA index is a compilation of supplements to the departmental manual system, program level operations manuals, circulars, memoranda, notices and guides used by the components of HSA. All information included in this index is current as of June 30, 1976. The respective bureau level indexes are listed as follows: OA—OFFICE OF THE ADMINISTRATOR OCPA—Public Affairs Management System Manual; OPEL—HSA forward plan, fiscal year 1977-81; OM/OCG—HSA procurement operating instructions; OM/OMP—HSA transmittal notices for supplements to DHEW manuals; OM/OFS—policy decisions and opinion. BMS—BUREAU OF MEDICAL SERVICES Division of Hospitals and Clinics Operations Manual; BMS supplements to DHEW manuals; Manual of Operations for PHS Health Unit, DFEH, BMS; CHAMPUS circulars; Contract Physician's Guide; Division of Hospitals and Clinics circular memoranda. IHS—INDIAN HEALTH SERVICES IHS circulars; IHS supplements to DHEW manuals; IHS Operations Manual; General Counsel opinions. BCHS—BUREAU OF COMMUNITY HEALTH SERVICES BCHS administrative guide system; BCHS Operations Manual.	Office of Communications and Public Affairs, DHEW/PHS/HSA, Room 14A-55, 5600 Fishers Lane, Rockville, Md. 20852. Checks payable to DHEW/Public Health Service. Mail to HSA Collection Officer, DHEW/PHS/HSA, Room 16-36, 5600 Fishers Lane, Rockville. Md. 20852. Fees charged for research and reproduction of information is based upon the current departmental fee schedule for information under the FOI regulations (45 CFR part 5 subpart E).	Office of Communications and Public Affairs DHEW/PHS/HSA, Room 14A-55, 5600 Fishers Lane, Rockville, Md.

Agency and subagency name	Index title: period covered, brief description of contents	Order from; price; make checks payable to	For inspection, copying, or additional information contact
	BQA—BUREAU OF QUALITY ASSURANCE		
	BQA transmittal system; BQA Procedures Manual; PSRO Program Manual; PSRO Financial Management and Accounting Systems Manual; PSRO Contracts Management Manual; PSRO Management Information System (PMIS) Federal Reports Manual (FRM) medical care evaluation studies; PMIS—FRM—cost reporting; PMIS—FRM—concurrent review reporting; PSRO Hospital Discharge Data Set (PHDDS) Training Manual.		
Department of Health, Education, and Welfare, National Institutes of Health (NIH).	NIH Freedom of Information Act index; from July 4, 1967–Mar. 31, 1976, includes items in the following categories: (1) administrative manuals and memorandum, (2) animal resources and programs, (3) audio-visuals policy and criteria, (4) clinical center operations, (5) contracts policy and guides, (6) employee and committee member handbooks and manuals, (7) grants policy and guides, (8) library resources and guidelines, (9) minority programs, (10) patient policy, (11) research centers guides, (12) safety guides and permits, and (13) site visit formats.	In addition to copies of the NIH EOIA index maintained by HEW, NIH will make photocopies available if requests are forwarded to: Associate Director for Communications, NIH, Building 1, Room 309, 9000 Rockville Pike, Bethesda, Md. 20014. Fees, as prescribed in 45 CFR 5.61, are 10 cents per page with the charge being made if the total amount exceeds $5. Checks payable to: DHEW—National Institutes of Health.	Associate Director for Communications, NIH, Building 1, Room 309, 9000 Rockville Pike, Bethesda, Md. 20014. (301)496-4461.
DHEW/PHS/Office of Administrative Management.	Index to the PHS Manual for financial evaluation of Public Health Service awards, continuous from July 1, 1974.	Photocopies available if requests are forwarded to: Division of Grants and Contracts, ORM/OAM/PHS, 5600 Fishers Lane, Rockville, Md. 20852. Fees as prescribed in 45 CFR 5.61 are 10¢ per page, with the charge being made if the total amount exceeds $5. Checks payable to DHEW, Public Health Service.	Division of Grants and Contracts, ORM/OAM/PHS, 5600 Fishers Lane, Rockville, Md. 20852.
Do	A guide to institutional cost sharing agreements for research grants and contracts, supported by the Department of Health, Education, and Welfare, continuous from July 1974.	Copies may be obtained from Division of Grants and Contracts, ORM/OAM/PHS, 5600 Fishers Lane, Rockville, Md. No charge.	Division of Grants and Contracts, 5600 Fishers Lane, Rockville, Md. 20852.
Do	PHS procurement regulations; policies and procedures which implement and supplement the DHEW procurement regulations and the Federal procurement regulations, continuous from May 1974.	Photocopies available if requests are forwarded to: Division of Grants and Contracts, ORM/OAM/PHS, 5600 Fishers Lane, Rockville, Md. 20852. Fees as prescribed in 45 CFR 5.61 are 10¢ per page with the charge being made if the total amount exceeds $5. Checks payable to DHEW, Public Health Service.	Copies available: ASC Forms and Publications Service Center, OAM, 12100 Parklawn Dr., Rockville, Md. 20852 Additional information: Division of Grants and Contracts ORM/OAM/PHS, 5600 Fishers Lane, Rockville, Md. 20852.
Do	PHS grants policy statement; comprehensive policy document for use by PHS grantees, continuous from July 1974.	GPO, 90 cents, Superintendent of Documents (Stock No. 1720-00035).	Superintendent of Documents, GPO, Washington, D.C. 20402.
Do	Index to PHS supplements to HEW Grants Administration Staff Manual; supplementation and implementations to HEW manual; continuous from January 1974.	Photocopies available if requests are forwarded to: Division of Grants and Contracts, ORM/OAM/PHS, 5600 Fishers Lane, Rockville, Md. 20852. Fees are prescribed in 45 CFR 5.61, as 10¢ per page with the charge being made if the total amount exceeds $5. Checks payable to DHEW, PHS.	Division of Grants and Contracts ORM, OAM PHS, 5600 Fishers Lane, Rockville, Md. 20852.
Do	Tables of contents to PHS supplementation of HEW staff manuals containing authorities, policies, and procedures in the following areas: Emergency, forms management, general administration, grants administration, organization, public affairs, systems management, records management, safety management, security, facilities engineering and construction, procurement, and reports management.	Chief, Management Support Branch, Division of Management Policy and Analysis, OASH. Room 17-75 Parklawn Bldg., 5600 Fishers Lane, Rockville, Md. 20852. Fees as described in 45 CFR 5.61, are 10¢ per page with the charge being made if the total amount exceeds $5. Checks payable to DHEW, Public Health Service, Office of the Assistant Secretary for Health.	Chief, Management Support Branch, Division of Management Policy and Analysis, Room 17-75, Parklawn Bldg., 5600 Fishers Lane Rockville, Md. 20852.
Do	Table of contents to PHS Commissioned Corps Personnel Manual containing authorities, policies, and procedures in that subject area.	do	Do.
Do	Table of contents to PHS supplementation of the Federal Personnel Manual containing authorities, policies, and procedures in that subject area.	do	Do.
Do	Table of contents to Parklawn guidelines: a series of internal operating guides providing operating instructions and procedures of a continuing nature for occupants of the Parklawn Bldg., Rockville, Md., with regard to operations of the Administrative Services Center, Office of Administrative Management. Guidelines include such subjects as procedures for operation and use of official conference rooms; apportionment and assignment of parking spaces; official hours; and conservation of paper in copying, duplicating, and printing, Parklawn Bldg.	Executive Officer, Administrative Services Center, Office of Administrative Management, OASH, Room 5-77, Parklawn Bldg. 5600 Fishers Lane, Rockville, Md. 20852. Fees, as prescribed in 45 CFR 5.61, are 10c per page with the charge being made if the total amount exceeds $5. Checks payable to Department of Health, Education, and Welfare, Public Health Service, Office of the Assistant Secretary for Health.	Do.
Public Health Service, Office of Long-Term Care.	Long-term care facility improvement study; introductory report, July 1975.	U.S. Government Printing Office, Washington, D.C. 20402. Price $2.15.	Ms. Florence Gareau
Do	ONHA policy circulars or memoranda (numbered).	ONHA will provide single copies of 1 memorandum without charge. Complete sets of policy memoranda published by Commerce Clearing House, Inc., 4025 W. Peterson Ave., Chicago, Ill. 60646. (annual subscription charge).	Ms. Florence Gareau
DHEW/PHS/OASH/OEEO	Guidelines for the precomplaint counseling system in the Public Health Service regional offices.	No charge. Director, OEEO/OASH, Room 17-66, 5600 Fishers Lane, Rockville, Md. 20852.	Director, OEEO/OASH, Room 17-66, 5600 Fishers Lane, Rockville, Md. 20852.
1. DOL [4]/ILAB	Trade adjustment assistance decision, Apr. 1 to June 30, 1976.	Bureau of International Labor Affairs, 10¢ per page, Department of Labor.	ILAB, New Department of Labor Bldg., 200 Constitution Ave. NW., Washington, D.C. 20210.[5]
2. DOL/OSHA	Program directives, Jan. 1 to June 30, 1976.		
3. DOL/OWCP/FECA	Bulletins; compensation, Federal employees, longshoremen, black lung, Jan. 1 to June 30, 1976.	Office of Workers Compensation Programs, 10¢ per page, Department of Labor.	Office of Workers Compensation, New Department of Labor Bldg., 200 Constitution Ave. NW., Washington, D.C. 20210.
4. DOL/OWCP/LHWCA			
5. DOL/OWCP/BLBP			

See footnotes at end of table.

Agency and subagency name	Index title: period covered, brief description of contents	Order from; price; make checks payable to—	For inspection, copying, or additional information contact
6. DOL/ESA/W-H	Wage hour, field operations handbook	Wage and hour, 10¢ per page, Department of Labor.	Wage and Hour Division, New Department of Labor Bldg., 200 Constitution Ave. NW., Washington, D.C. 20210.
7. DOL/ESA/OFCC	Office of Contract Compliance, program memoranda.	Office of Contract Compliance, 10¢ per page, Department of Labor.	Office of Contract Compliance.
Department of Transportation, Federal Highway Administration:	Opinions and final orders of the Federal Highway Administration in regard to the regulation of toll bridges; 1968-75; 1 page listing of opinions and final orders regarding regulation of toll bridges issued by the Federal Highway Administrator, which identifies the case and the date issued.	FOIA Program Officer, Federal Highway Administration, 400 7th St. SW., Washington, D.C. 20590. No charge.	FOIA Program Officer, Federal Highway Administration, 400 7th St. SW., Washington, D.C. 20590.
Do	Cease and desist and driver disqualification final orders by the Federal Highway Administrator; 1969-75; 6-page listing of cease and desist and driver disqualification final orders of the Federal Highway Administrator; items listed are identified by case docket number, name of carrier, and date notice of investigation was mailed.	do	Do.
Do	Cross reference index of current Federal Highway Administration directives as of Mar. 31, 1976 (FHWA notice N1321.13), dated May 23, 1976. The index is alphabetical by subject. Within each subject applicable Federal Highway Administration orders, notices, and manuals are identified (in some cases manuals may be also identified by the applicable volume or other subordinate breakdown). The index is computerized and updated quarterly.	FOIA Program Officer, Federal Highway Administration, 400 7th St. SW., Washington, D.C. 20590. Shelf stock, $10.03 per copy; reproduced copies, $0.10 per copy; shelf stock will be used while it lasts. Checks payable to: The Treasury of the United States.	FOIA Program Officer, Federal Highway Administration, 400 7th St. SW., Washington, D.C. 20590; Federal Highway Administration Regional Offices. (For location see 49 CFR pt. 7.); Federal Highway Administration Division Offices. (For location see 49 CFR pt. 7).
Department of the Treasury, Bureau of Alcohol, Tobacco, and Firearms.	The Director, Bureau of Alcohol, Tobacco, and Firearms (ATF), has determined that publication in the FEDERAL REGISTER of the ATF index of materials required by the Freedom of Information Act is unnecessary and impracticable for the reason that the index is changing continually and that items listed are of interest to relatively few potential users. Copies of the index may, however, be obtained upon request to the Office of Assistant to the Director, Public Affairs, Bureau of Alcohol, Tobacco, and Firearms, Washington, D.C. 20226, at a cost of $2. The index is entitled, "Index of Materials Required by the Freedom of Information Act; ATF P 1200.3." The index covers the period of July 1967 through March 1976 and consists of final opinions and orders made in the adjudication of cases, statements of policy and bureau directives, and the latest listing of ATF publications.	Office of Assistant to the Director, Public Affairs, Room 4402, Bureau of Alcohol, Tobacco, and Firearms, Washington, D.C. 20226. Price: $2. Make check payable to Bureau of Alcohol, Tobacco, and Firearms.	Public Affairs Reading Room 4402, Bureau of Alcohol, Tobacco, and Firearms, 1200 Pennsylvania Ave. NW., Washington, D.C. 20226; Bureau of Alcohol, Tobacco, and Firearms, North Atlantic Regional Office, 6 World Trade Center, Room 620, New York, N.Y. 10048; Bureau of Alcohol, Tobacco, and Firearms, Mid-Atlantic Regional Office, Room 340, Philadelphia, Pa. 19102; Bureau of Alcohol, Tobacco, and Firearms, Southeast Regional Office, 3835 Northeast Expressway, Room 201, Atlanta, Ga. 30340; Bureau of Alcohol, Tobacco, and Firearms, Central Regional Office, Federal Office Bldg., Room 6022, 550 Main St., Cincinnati, Ohio 45202; Bureau of Alcohol, Tobacco, and Firearms, Midwest Regional Office, 230 South Dearborn St., 15th Floor, Chicago, Ill. 60604; Bureau of Alcohol, Tobacco, and Firearms, Southwest Regional Office, Main Tower, 1200 Main St., Room 355, Dallas, Tex. 75202; Bureau of Alcohol, Tobacco, and Firearms, Western Regional Office, 525 Market St., 34th Floor, San Francisco, Calif. 94105.
Department of the Treasury, Office of the Secretary.	Index of Selected Records; July 1967-June 1976; Listing of current administrative documents, reports, and releases from the Office of the Secretary, Bureau of Engraving and Printing, Bureau of the Mint, U.S. Secret Service, Bureau of the Public Debt, Bureau of Government Financial Operations, Federal Law Enforcement Training Center, U.S. Customs Service.	Treasury Department Library, Room 5010, Treasury Bldg., 15th and Pennsylvania Ave., Washington, D.C. 20220; $1.00; Treasury of the United States.	Treasury Department Library, Room 5010, Treasury Bldg., 15th and Pennsylvania Ave. Washington, D.C. 20220.
(U.S.) Arms Control and Disarmament Agency:	Index to notices, instructions, regulations, and other ACDA records.	Freedom of Information Officer, U.S. Arms Control and Disarmament Agency, Department of State Bldg., Washington, D.C. 20451. No charge.	Freedom of Information Officer, U.S. Arms Control and Disarmament Agency, Department of State Bldg., Washington, D.C. 20451.
Civil Service Commission (CSC).	Index to Civil Service Commission information. CSC document No. 1. Period covered: December, 1975 to February, 1976. A listing of policy and nonpolicy publications and information systems arranged alphabetically by title and subject.	Distribution Unit, Room B-431, U.S. Civil Service Commission, 1900 E St. NW., Washington, D.C. 20415. Free.	Commission Library or any Commission office, including regional and area offices.
Committee for Purchase from the Blind and Other Severely Handicapped.	Index of additions and deletions to the procurement list. Fiscal year 1972 (additions and deletions occurring after Aug. 29, 1971 thru June 30, 1972); fiscal year 1973; fiscal year 1974; fiscal year 1975; fiscal year 1976 (July 1, 1975 thru Mar. 31, 1976).	Order from: Executive Director, Committee for Purchase from the Blind and Other Severely Handicapped, 2009 N. 14th St., Suite 610, Arlington, Va. 22201. Price: 10¢ per page, per copy. Make checks payable to: Treasurer of the United States.	Committee for Purchase from the Blind and Other Severely Handicapped. Attention: Freedom of Information Officer.
Consumer Product Safety Commission.	Index: Final Opinons and Orders; Statements of Policy and Interpretations; Administrative Staff Manual and Instructions.	Office of the Secretary, Consumer Product Safety Commission, Washington, D.C. 20207; No charge.	Office of the Secretary, Consumer Product Safety Commission, 1750 K St. NW., Washington, D.C. 20207.
Council on Environmental Quality.	*Memoranda to the heads of all Federal agencies:*		
Do	(i) CEQ memo to heads of agency on revised guidelines, Apr. 23, 1971.	Available from CEQ	Council on Environmental Quality, General Counsel's Office, 722 Jackson Pl., NW., Washington, D.C. 20006; (202) 382-7365.
Do	(ii) CEQ memo to agency NEPA liaison on agency NEPA procedures May 14, 1971.	do	Do.
Do	(iii) CEQ memo to agency NEPA liaison on inclusion of cost-benefit analyses, May 24, 1971.	do	Do.
Do	(iv) CEQ memo to agency NEPA liaison on *Calvert Cliffs* decision, July 30, 1971.	do	Do.
Do	(v) CEQ memo to agency NEPA liaison on extension of deadline on NEPA procedures, Aug. 5, 1971.	do	Do.
Do	(vi) CEQ memo to heads of agencies on agency NEPA procedures, Sept. 23, 1971.	do	Do.
Do	(vii) CEQ memo to heads of agencies on agency NEPA procedures, Nov. 2, 1971.	do	Do.
Do	(viii) CEQ memo to agency NEPA liaison on outline of issues in agency NEPA procedures Dec. 3, 1971.	do	Do.
Do	(ix) CEQ memo to agency NEPA liaison on extracts from leading NEPA court decisions, Dec. 3, 1971.	do	Do.

Agency and subagency name	Index title: period covered, brief description of contents	Order from; price; make checks payable to—	For inspection, copying, or additional information contact
Do	(x) CEQ memo to agency NEPA liaison on cumulative list of environmental impact statements, Dec. 23, 1971.	do	Do.
Do	(xi) Revised CEQ guidelines on environmental impact statements prepared under section 102(2)(C) of the National Environmental Policy Act, Apr. 23, 1971.	do	Do.
Do	(xii) Recommendations for improving agency NEPA procedures, May 16, 1972.	do	Do.
Do	(xiii) Revision of agency procedures for preparation of environmental impact statements, Aug. 2, 1973.	do	Do.
Do	(xiv) NTIS and the public availability of environmental impact statements under NEPA, Mar. 1, 1974, 102 Monitor vol. 4, No. 2, March 1974. p. 23.	do	Do.
Do	(xv) Council advisory memorandum #1 on delegation by Federal agencies of responsibility for preparation of EIS's. 102 Monitor.	do	Do.
Do	(xvi) CEQ publications lists, Dec. 10, 1975	do	Council on Environmental Quality, Attention: Freedom of Information Officer, 722 Jackson Pl. NW., Washington, D.C. 20006; (202) 382-1415.
Do	(xvii) CEQ memo to heads of agencies on SCRAP decision Nov. 26, 1975.	do	Council on Environmental Quality, General Counsel's Office, 722 Jackson Pl. NW., Washington, D.C. 20006; (202) 382-7065.
Do	(xviii) CEQ memo to heads of agencies on environmental impact statements Feb. 10, 1976.	do	Do.
Do	(xix) CEQ position paper "Pollution Control and Employment" February 1976.	do	Council on Environmental Quality, Attention: Dr. E. H. Clark, 722 Jackson Pl. NW., Washington, D.C. 20006; (202) 382-6163.
Do	(A) Memorandum of implementation of the agreement between the United States and the U.S.S.R. on cooperation in the field of environmental protection, May 1972, 102 Monitor vol. 2, No. 9, October 1972.	Available by Ordering Cited Copy of the 102 Monitor from GPO.	Council on Environmental Quality, General Counsel's Office, 722 Jackson Place NW., Washington, D.C. 20006 (202) 382-7065.
Do	(B) 20 questions and answers explaining NEPA Sec. 102, environmental impact statement process, 102 Monitor, vol. 1, No. 10, November 1971, p. 1.	do	Do.
Do	(C) Coal surface mining and reclamation study, 102 Monitor, vol. 3, No. 2, March 1973 p. 62.	do	Do.
Do	(D) Economic impact of environmental programs, 102 Monitor vol. 4, No. 10, November 1974, p. 3.	do	Do.
Do	(E) Environmental programs and employment, 102 Monitor vol. 5, No. 4, May 1975.	do	Do.
Do	(F) Council advisory memorandum (memo on) 102 Monitor, vol. 5, No. 3, April 1975.	do	Do.
	(G) Council advisory memorandum #2 on application of NEPA to enforcement of the antitrust laws by the FTC, 102 Monitor, vol. 5, No. 2, March 1975, p. 13.	do	Do.
Energy Research and Development Administration.	ERDA headquarters reports: Cumulative index issued monthly starting Jan. 1 1975. Includes report number, corporate author, and subject indexes. Includes reports prepared by individual headquarters authors, task forces and study groups, and environmental statements covering ERDA programs and facilities.	ERDA Library and Public Document Room, Washington, D.C. 20545. Copies made available at $0.08 per page. Payable to: Energy Research and Development Administration.	ERDA Library and Public Document Room, Room 1223, 20 Massachusetts Ave. NW., Washington, D.C. 20545.
Do	ERDA manual table of contents: Covers directives; procurement instructions and regulations; and property management regulations, instructions, and bulletins. A cumulative table of contents is issued quarterly listing ERDA issuances and those AEC issuances still in effect.	do	Do.
ERDA, Board of Contract Appeals (BCA).	Atomic Energy Commission reports, October 1956 to January 1975, vols. 1-8: Contains the BCA decisions and orders and indexes to them.	Superintendent of Documents, U.S. Government Printing Office, Washington, D.C. 20402.	Do.
Do	Decisions and orders for the periods Jan. 19, 1975 to December 1975 and Jan. 1 to June 30, 1976, including indexes.	ERDA Library and Public Document Room, Washington, D.C. 20545. Copies made available at $0.08 per page. Payable to: Energy Research and Development Administration.	Do.
Farm Credit Administration	Index of FCA Information Materials; July 1 to Sept. 30, 1976; (1) Publications (those available in supply); (2) news releases—(single copies available free of charge) issued since Jan. 1, 1972; (3) biographies of FCA officials; (4) speeches by FCA officials; (5) FCA regulations and clarification letters; (6) research reports; (7) FCA administrative and Personnel Handbook; (8) Directory of the FCA and Farm Credit Districts; (9) Monthly statistics on farm credit bank lending (list of tables); (10) FCA orders; and (11) FCA organization charts.	Information Division, Farm Credit Administration, 490 L'Enfant Plaza SW., Washington, D.C. 20578. No charge.	Mr. Carroll Arnold, Director of Information, Farm Credit Administration, 490 L'Enfant Plaza SW., Washington, D.C. 20578.
Federal Communications Commission.	The "FCC Reports," containing Commission decisions of historical or precedential significance since 1934 and indices thereto. The "FCC Reports" are published weekly in pamphlet form and are subsequently compiled and published in bound volumes. The bound volumes contain cumulative indices. Cumulative index volumes covering longer periods are issued periodically.	Order from Superintendent of Documents, U.S. Government Printing Office, Washington, D.C. 20402. Available on a subscription basis. Bound volumes may also be purchased separately. Prices vary. Checks: Superintendent of Documents.	Office of General Counsel, Federal Communications Commission.
Federal Power Commission	Index to Commission action, Quarter ended Mar. 31, 1976.	Office of Public Information, Federal Power Commission, Washington, D.C. 20426. No charge.	Office of Public Information, Federal Power Commission, Room 1000, 825 North Capitol St. NE., Washington, D.C. 20426.

Agency and subagency name	Index title: period covered, brief description of contents	Order from; price; make checks payable to—	For inspection, copying, or additional information contact
Federal Reserve System, Board of Governors.	Card index to Board actions of the type that are made available to the public under the Freedom of Information Act from July 4, 1967 to date.		May be inspected in Public Information Office, Room B-1118, Main Board Bldg., 20th and C Sts. NW.
Do	Microfilm copies of above index covering period July 4, 1967 to Dec. 31, 1975. Subsequent years to be microfilmed.	Order from Public Information Office, Board of Governors of the Federal Reserve System, Washington, D.C. 20551. Checks payable to Board of Governors of the Federal Reserve System. $12.50 a roll.	Public Information Office, Room B-1118, Main Board Bldg., 20th and C St. NW., (202) 452-3234.
Do	Hard copy bound index for:		
	1967	do.[1]	Do.
	1968	do.[2]	Do.
	1969	do.[2]	Do.
	1970	do.[2]	Do.
	Copies for additional years in preparation.		
Do	Individual copy of the card index	Secretary, Board of Governors of the Federal Reserve System, Washington, D.C. 20551. Charge not to exceed the direct cost of duplication.	Public Information Office, Room B-1118, Main Board Bldg., 20th and C St. NW., (202) 452-3234.
Do	Weekly index published and distributed to the public providing identifying information as to any matter issued, adopted or promulgated by the Board from the first week in January 1975 to date (H.2 release).	Publications Services, Division of Administrative Services, Board of Governors of the Federal Reserve System, Washington, D.C. 20551. (Mailing list maintained; no charge for current copies.)	Do.
Federal Trade Commission (FTC):	Final orders and opinions: [3] Bound volumes of decisions July 1967, to June 1973.	Superintendent of Documents, Government Printing Office, Washington, D.C. 20402. Checks: Superintendent of Documents. $5-12 each.	Legal and Public Records, Federal Trade Commission, Room 130, 6th and Pennsylvania Ave. NW., Washington, D.C. 20580.
Do	Advisory opinions: [3] Bound volume, July 1967 to December 1968. Index of advisory opinions subsequent to above date is in bound volumes of decisions.	Superintendent of Documents, Government Printing Office, Washington, D.C. 20402. Checks: Superintendent of Documents. $2.25 each.	Do.
Do	Final orders and opinions: Supplemental index, July 1973 to June 1976.	Legal and Public Records FTC, Room 130, 6th and Pennsylvania Ave. NW., Washington, D.C. 20580. $0.10 per page.	Do.
Do	Enforcement statement, July 1967 to June 1976	do	Do.
Do	Trade regulation rules, July 1967 to June 1976	do	Do.
Do	Manuals—operating administrative	do	Do.
Do	Freedom of Information Act, access requests and responses, March 1973-June 1976.	do	Do.
Do	Closing letters, investigatory material, March 1974-June 1976.	do	Do.
Do	Motions to quash, investigational subpoenas, June 1962-June 1976.	do	Do.
Do	Motions to quash, 6(b) Orders and Orders requiring access, November 1975-June 1976.	do	Do.
Do	Clearance requests, January 1969-June 1976	do	Do.
Do	Commissioners' outside contacts, April 1974-June 1976.	do	Do.
Do	Staff opinion letters, May 1962-June 1976	do	Do.
Foreign Claims Settlement Commission (FCSC).	Guide to indexes, claim decisions, list of FCSC publications, and other material related to claims programs administered by the Foreign Claims Settlement Commission (July 4, 1967 to June 30, 1976).	Executive Director, FCSC, 1111 20th St. NW., Washington, D.C. 20579. No charge.	Executive Director, FCSC, 1111 20th, St. NW., Washington, D.C. 20579.
General Services Administration (GSA):	GSA Freedom of Information Act index; July 4, 1967 through Mar. 31, 1976. Category A information which is final opinions, including concurring and dissenting opinions and orders, made in the adjudication of cases. Category B information which is those statements of policy and interpretations which have been adopted by GSA and are not published in the FEDERAL REGISTER. Category C information which is administrative staff manuals and instructions to staff that affect a member of the public.	GSA, Director of Information (AV), Washington, D.C. 20405. Price: $4.75. Make checks payable to: General Services Administration.	GSA Central Office Library and the business service centers located in each regional office listed below: Central Office Library, 18 and F Sts. NW., Room 1033, Washington, D.C. 20405. Business service centers: Region 1: John W. McCormack Post Office and Courthouse, Boston, Mass. 02109. Region 2: 26 Federal Plaza, New York, N.Y. 10007. Region 3: 7 and D Sts. SW., Washington, D.C. 20407. Region 4: 1776 Peachtree St. NW., Atlanta, Ga. 30309. Region 5: 230 South Dearborn St., Chicago, Ill. 60604. Region 6: 1500 East Bannister Rd., Kansas City, Mo. 64131. Region 7: 819 Taylor St., Fort Worth, Tex. 76102. Region 8: Building 41, Denver Federal Center, Denver, Colo. 80225. Region 9: 525 Market St., San Francisco, Calif. 94105. Region 10: GSA Center, Auburn, Wash. 98002.
Indian Claims Commission	Index of Indian Claims Commission decisions, inception to date: tribe, docket number, citations, summary of action, date. Currently 173 pp.	Clerk, Indian Claims Commission, 1730 K St., NW., Room 642, Washington, D.C. 20006. $0.04 per page. (Payee to be designated.)	Clerk, Indian Claims Commission, 1730 K St., NW., Room 642, Washington, D.C. 20006.
Interstate Commerce Commission:	Interpretations Manual		Bureau of Operations, Interstate Commerce Commission, 12th and Constitution Ave. NW., Washington, D.C. 20423.
National Labor Relations Board:	Digest of Decisions of the National Labor Relations Board; July 1, 1967-June 30, 1968; Subject matter index to decisions of the N.L.R.B. including outline.	Superintendent of Documents, U.S. Government Printing Office, Washington, D.C. 20402; $4.75; Superintendent of Documents.	Any regional office of the National Labor Relations Board or Freedom of Information Officer, National Labor Relations Board, 1717 Pennsylvania Ave. NW., Washington, D.C. 20570.
Do	Digest of Decisions of the National Labor Relations Board; July 1, 1963-June 30, 1969; Subject matter index to decisions of the N.L.R.B. including outline.	Superintendent of Documents, U.S. Government Printing Office, Washington, D.C. 20402; $4; Superintendent of Documents.	Do.
Do	Digest of Decisions of the National Labor Relations Board; July 1, 1969-June 30, 1970; Subject matter index to decisions of the N.L.R.B. including outline.	Superintendent of Documents, U.S. Government Printing Office, Washington, D.C. 20402; (price: not yet consolidated for purchase); Superintendent of Documents.	Do.
Do	Litigation Manual Outline and Litigation Manual National Labor Relations Board; July 1, 1956-June 30, 1971; Subject matter classification of court decisions relating to the National Labor Relations Act.	Superintendent of Documents, U.S. Government Printing Office, Washington, D.C. 20402; $9.60; Superintendent of Documents.	Do.

See footnotes at end of table.

Agency and subagency name	Index title: period covered, brief description of contents	Order from; price; make checks payable to—	For inspection, copying, or additional information contact
Do.	Classified index of N.L.R.B. and related court decisions; July 1970-June 1974; Subject matter classification to Board decisions and court decisions related to the National Labor-Relations Act.	Superintendent of Documents, U.S. Government Printing Office, Washington, D.C. 20402; $19.50; Superintendent of Documents.	Do.
Do.	Classified index of N.L.R.B. and related court decisions; subscription to cumulative publications part 1 July 1, 1974-June 30, 1975; part 2 July 1, 1975-Dec. 31, 1975; part 1 now being printed; part 2 in preparation for print.	Superintendent of Documents, U.S. Government Printing Office, Washington, D.C. 20402; $21 for both parts when available; Superintendent of Documents.	Do.
Do.	Classified index of decisions of regional directors of the National Labor Relations Board in representation proceedings; prepublication print and supplement for July 1, 1967—March 1975; index in publication for period June 1, 1967-Dec. 30, 1975 with quarterly supplements thereafter.	Prepublication print and supplement available from Freedom of Information Officer, N.L.R.B., 1717 Pennsylvania Ave. NW.; $7.00; National Labor Relations Board—printed index and quarterly supplements to be available from Superintendent of Documents, Government Printing Office.	Do.
Do.	Classified index of dispositions of unfair labor practice charges by the General Counsel of the National Labor Relations Board; subject matter index to advice memoranda and appeals memoranda and dispositions; July 1, 1967-Dec. 31, 1975.	In publication: will be made available through Superintendent of Documents with quarterly supplements.	Do.
Do.	Table of cases in which the General Counsel of the National Labor Relations Board refused to issue complaint on ULP charges because of insufficient evidence; July 1, 1967-Dec. 31, 1975; and quarterly thereafter; rudimentary subject outline of cases in which the General Counsel refused to issue complaint because of insufficient evidence; cases in which refusal to issue complaint was based upon finding of no violation of the act are listed in the classified index of dispositions of ULP charges by the General Counsel described *supra*.	Not published because unnecessary and impracticable due to insignificance of cases listed therein. Copies available at cost of direct duplication.	Do.
National Science Foundation (NSF):	Index of NSF circulars, manuals, and bulletins in effect as of June 30, 1976. A numerical and classification index of agency-wide issuances, encompassing: (a) NSF circulars—convey agency policies, regulations, and procedures of a continuing nature; (b) NSF manuals—provide detailed instructions for implementing operating procedures, requirements, and criteria; and (c) NSF bulletins—used to communicate urgent information concerning changes in policy or procedure prior to its incorporation into a circular or manual, and to communicate other information that is pertinent for a specific period.	NSF Public Information Office, Room 531, 1800 G St. NW., Washington, D.C. 20550. $0.10 per page, per copy. Payable to: National Science Foundation.	NSF Library, Room 219, 1800 G St. NW., Washington, D.C. 20550.
Do.	Index of Office of the Director staff memoranda (O/D) in effect, as of June 30, 1976. A numerical index, by calendar year, of issuances used by the Director and Deputy Director of the National Science Foundation to implement policy and to communicate with the staff on subjects of their choice.	do.	Do.
Do.	Numerical index of NSF important notices in effect as of June 30, 1976. An index of notices serving as the primary means of general communication by the Director, NSF, with organizations receiving or eligible for NSF support. The notices convey important announcements of NSF policies and procedures or concerning other subjects determined to be of interest to the academic community and to other selected audiences.	do.	Do.
Do.	Reference file of current internal directorate issuances. A listing, by NSF directorate, of pertinent internal issuances of major NSF organizational components conveying policies, criteria, instructions or procedures amplified at a level below the Office of the Director and to communicate information of specific scope.	do.	Do.
Do.	Index of NSF regulations promulgated in the Code of Federal Regulations under title 41, public contracts, property management; and title 45, public welfare. A listing, by subject title, of current Foundation regulations with a brief description of the content of each.	do.	Do.
Do.	Publications of the National Science Foundation. An index by topical classification, as of February 1975, of current NSF publications issued and available to the public. Listings include annual reports, specific program announcements and brochures, science resources studies pamphlets, special studies publications and NSF periodicals. In addition to titles, provides NSF publication numbers and copy prices. (NSF publication 75-13.)	NSF Central Processing Section 1800 G St. NW., Washington, D.C. 20550. One copy gratis.	For inspection or copying: NSF Library, Room 219, 1800 G St. NW., Washington, D.C. 20550. For additional information: NSF Communications Resource Branch (OGPP) Room 531, 1800 G St. NW., Washington D.C. 20550.
Do.	NSF guide to programs. A composite listing of summary information about NSF support programs, as of December 1975. Provides general guidance and information describing the principal characteristics and basic purposes of each activity; eligibility requirements; closing dates (where applicable); and the address where more detailed information or applications may be obtained. (NSF publication 76-4.)	NSF Central Processing Section, 1800 G St. NW., Washington, D.C. 20550. One copy gratis; or Superintendent of Documents, U.S. Government Printing Office, Washington, D.C. 20402. Stock No. 3800-00195. Unit price: $2.05.	Do.

Agency and subagency name	Index title: period covered, brief description of contents	Order from; price; make checks payable to—	For inspection, copying, or additional information contact
National Transportation Safety Board (NTSB).	Initial decisions of administrative law judges, Apr. 4, 1967 to June 30, 1976. Chronological listing (by date of service) of decisions after hearings on appeal involving airman or air safety certificates. Safety enforcement decisions, May 18, 1967 to June 30, 1976. Alphabetical and numerical listings of EA and EM final opinions/orders of the Board on appeal from initial decisions of NTSB administrative law judges or Commandant, U.S. Coast Guard. NTSB directives checklist as of Jan. 9, 1976. Numerical listing (by NTSB order No.) of staff operations directives.	Copies of indexes and checklist may be obtained by writing to Public Inquiries Section, National Transportation Safety Board, Washington, D.C. 20594. (Fees for duplication and instructions for payment will be included in letter of acknowledgment to requester.)	Chief, Public Inquiries Section, Room 806-B, National Transportation Safety Board, 800 Independence Ave. SW., Washington, D.C. 20594. Public Reference Room 806-B.
Office of Management and Budget (OMB).	Index to BOB/OMB bulletins, July 4, 1967 to June 30, 1976. Keyword index of OMB bulletins.	Office of Management and Budget. No fee	Velma N. Baldwin, Assistant to the Director for Administration.
Do	Office of Management and Budget circulars Index, 1948 to June 30, 1976. Arranges current OMB circulars by keywords in the titles of the directives and by a limited number of broader captions.	do	Do.
Do	Index to Office of Management and Budget manual. All those sections currently in effect through June 30, 1976. Arranged by keywords in the titles.	do	Do.
Do	Rescinded Office of Management and Budget circulars, through June 30, 1976. Arranged by number, date, subject, rescission date, and circular replacement (if any).	do	Do.
Do	Listing of Federal management circulars transferred from General Services Administration. Arranged by number, subject, and date.	do	Do.
Office of Telecommunications Policy.	Office of Telecommunications Policy public document index, 1970 to June 30, 1975. Arranges statements of policy by title under keyword subject heading.	Copies of index may be obtained by writing to: Publications Office, Office of Telecommunications Policy, 1800 G St. NW., Washington, D.C. 20504.	Publications Office, Office of Telecommunications Policy, 1800 G St. NW., Washington, D.C. 20504.
Do	Office of Telecommunications Policy circulars index, 1971 to June 30, 1976. Arranges OTP circulars chronologically by number and title.	do	Do.
Do	Office of Telecommunications Policy orders to staff indexed chronologically by number and title.	do	Do.
Pension Benefit Guaranty Corporation, Office of the General Counsel.	Index to Pension Benefit Guaranty Corp. Opinion Manual; Sept. 2, 1974 to Mar. 31, 1976; interpretive letters addressing the provisions of title IV of the Employee Retirement Income Security Act—plan termination insurance program.	The Office of Communications, Pension Benefit Guaranty Corp., Room 7100, 2020 K St. NW., Washington, D.C. 20006; Charge $[illegible]; Payable to The Pension Benefit Guaranty Corp.	The Office of Communications, Attention: Mr. Joel Greenblatt, (202) 254-4817, 2020 K St. NW., Washington, D.C. 20006.
Postal Rate Commission	Postal Rate Commission index, from 1971 to date. Opinions and recommended decisions, advisory opinions and orders having a precedential value.	Secretary of the Commission, Postal Rate Commission, Washington, D.C. 20268. No charge.	Commission's Reading Room, Suite 500, 2000 L St. NW., Washington, D.C.
Renegotiation Board	Index of documents, vols. 1 and 2, 1967 to present: Agreements, modification agreements, clearances after assignment, clearances after reassignment, clearances without assignment, clearance agreements, letters not to proceed, final opinions, regional board opinions, orders, modification orders, special accounting agreements, interpretations, general orders, administrative orders, memoranda of decision, statements of facts and reasons, summaries of facts and reasons, decisions on applications for stock item exemption, decisions on new durable productive equipment exemption, and decisions on applications for commercial exemption.	Public Information Office, The Renegotiation Board, 2000 M St. NW., Washington, D.C. 20446. $0.15 per copy, minimum charge $2.	Public Information Office, The Renegotiation Board, 2000 M St. NW., Washington, D.C. 20446, Room 4008, Telephone: 254-7019.
Selective Service System	1. Index to Selective Service regulations and directives, 1948 to 1972. 2. Index to Selective Service regulations and registrants processing manual, 1972 to present. 3. General index to reconciliation service manual. 4. Registrant information bank guide index, 1972 to present.	National Headquarters, Selective Service System, 600 E St. NW., Washington, D.C. 20435. Prices: 1. $2, 2. $2, 3. $3, 4. $0.10. Make checks payable to: Selective Service System.	Records Manager, National Headquarters, Selective Service System, 600 E St. NW., Washington, D.C. 20435. Telephone (202) 382-2304.
Tennessee Valley Authority	Index to general administrative releases; covers period through June 1976; index to TVA organization bulletins, TVA codes, and TVA instructions.	John Van Mol, Director of Information, Tennessee Valley Authority, Knoxville, Tenn. 37902. Price: $2.00. Checks payable to: Tennessee Valley Authority.	John Van Mol, Director of Information, Tennessee Valley Authority, Knoxville, Tenn. 37902.

[1] $5. a copy.
[2] $10. a copy.
[3] Duplicated pages of Index.
[4] Department of Labor.
[5] All DOL indices are available at DOL Publication-Information Offices in major cities in the United States.

JULY 16, 1976.

FRED J. EMERY,
Director, Office of the Federal Register.

[FR Doc.76-20215 Filed 7-16-76;8:45 am]

DEPARTMENT OF STATE

Agency for International Development

[A.I.D. Loan No. 514-T-082]

COLOMBIA; AMBASSADOR AND/OR MISSION DIRECTOR

Delegation of Authority

Pursuant to the authority vested in me as Deputy United States Coordinator, Alliance for Progress, by the Foreign Assistance Act of 1961, as amended, and the delegations of authority issued thereunder, I hereby delegate to the United States Ambassador to Colombia and/or the Mission Director, USAID/Colombia, the authority to negotiate, execute, and implement a Loan Agreement (A.I.D. Loan No. 514-T-082) between the Government of Colombia and the United States for a project to improve the nutritional status of children under four years old and pregnant and lactating mothers from the lowest income groups pursuant to Loan Authorization signed July 1, 1976.

This delegation of authority to negotiate and execute shall be effective until October 29, 1976.

Dated: July 1, 1976.

HERMAN KLEINE,
Deputy U.S. Coordinator.

[FR Doc.76-20684 Filed 7-16-76;8:45 am]

COLOMBIA; DIRECTORS, USAID

Delegation of Authority

Pursuant to the authority vested in me as Deputy United States Coordinator, Alliance for Progress, by the Foreign Assistance Act of 1961, as amended, and the delegations of authority issued thereunder, I hereby delegate to the Director, USAID/Colombia, the authority to negotiate, execute, and implement Loan Agreement No. 514-T-081A between Accion Cultural Popular ("ACPO") and the United States, and Loan 514-T-081B between Servicio Nacional de Aprendizaje ("SENA") and the United States for a program to increase income producing skills, knowledge and information available to the small farmer and the rural poor by expanding training and other programs pursuant to Loan Authorization signed June 25, 1976.

The delegation of authority to negotiate and execute shall be effective until October 23, 1976.

Dated: June 25, 1976.

P. F. MORRIS,
Acting Deputy U.S. Coordinator.

[FR Doc.76-20690 Filed 7-16-76;8:45 am]

GUATEMALA; DIRECTOR, USAID

Delegation of Authority

Pursuant to the authority vested in me as Deputy U.S. Coordinator, Alliance for Progress, by the Foreign Assistance Act of 1961, as amended, and the delegations of authority issued thereunder, I hereby delegate to the Director, USAID/Guatemala, authority to execute an amendatory agreement to A.I.D. Loan No. 520-L-023 (Property Tax Development II) in accordance with and subject to the limitations of the Loan Authorization dated February 16, 1973, as amended on June 25, 1976, authorizing said Loan ("the amended Loan Authorization").

This delegation of authority shall remain in effect for a period not to exceed 120 days from the date of execution of the amended Loan Authorization.

Dated: June 25, 1976.

P. F. MORRIS,
Acting Deputy U.S. Coordinator.

[FR Doc.76-20691 Filed 7-16-76;8:45 am]

HONDURAS; DIRECTOR, USAID

Delegation of Authority

Pursuant to the authority vested in me as Deputy U.S. Coordinator, Alliance for Progress, by the Foreign Assistance Act of 1961, as amended, and the delegations of authority issued thereunder, I hereby delegate to the Director, USAID/Honduras, authority to negotiate and execute a Honduras Nutrition Loan (A.I.D. Loan No. 522-T-029) in accordance with and subject to the limitations of the Loan Authorization dated June 29, 1976 authorizing said Loan.

This delegation of authority shall remain in effect for a period not to exceed 120 days from the date of execution hereof.

Dated: June 29, 1976.

HERMAN KLEINE,
Deputy U.S. Coordinator.

[FR Doc.76-20685 Filed 7-14-76;8:45 am]

HONDURAS; DIRECTOR, USAID

Delegation of Authority

Pursuant to the authority vested in me as Deputy U.S. Coordinator, Alliance for Progress, by the Foreign Assistance Act of 1961, as amended, and the delegations of authority issued thereunder, I hereby delegate to the Director, USAID/Honduras, authority to negotiate and execute the Hurricane Rural Construction and Recovery II Loan (A.I.D. Loans 522-T-030 and 522-V-031) in accordance with and subject to the limitations of the Loan Authorization dated June 29, 1976, authorizing said Loan.

This delegation of authority shall remain in effect for a period not to exceed 120 days from the date of execution hereof.

Dated: June 27, 1976.

HERMAN KLEINE,
Deputy U.S. Coordinator.

[FR Doc.76-20687 Filed 7-16-76;8:45 am]

[A.I.D. Loan No. 524-U-032]

NICARAGUA; MISSION DIRECTOR

Delegation of Authority

Pursuant to the authority vested in me as Deputy United States Coordinator, Alliance for Progress, by the Foreign Assistance Act of 1961, as amended, and the delegations of authority issued thereunder, I hereby delegate to the Mission Director, USAID/Nicaragua, the authority to negotiate, execute, and implement a Loan Agreement (A.I.D. Loan No. 524-U-032) between the Republic of Nicaragua and the United States for a rural health services program ("Project"), pursuant to Loan Authorization signed June 28, 1976.

This delegation of authority to negotiate and execute shall be effective until October 25, 1976.

Dated: June 28, 1976.

HERMAN KLEINE,
Deputy U.S. Coordinator.

[FR Doc.76-20689 Filed 7-16-76;8:45 am]

PARAGUAY; DIRECTOR, USAID

Delegation of Authority

Pursuant to the authority vested in the Deputy U.S. Coordinator, Alliance for Progress, I hereby delegate to the Director, USAID/Paraguay, authority to negotiate, execute and implement Loan Agreement No. 526-T-028, Rural Enterprises Loan.

The authority delegated hereby to negotiate and execute the Loan Agreement shall remain effective for a period of 120 days from the date of the Loan Authorization.

Dated: June 29, 1976.

HERMAN KLEINE,
Deputy U.S. Coordinator.

[FR Doc.76-20686 Filed 7-16-76;8:45 am]

PANAMA; MISSION DIRECTOR

Delegation of Authority

Pursuant to the authority vested in me as Deputy United States Coordinator, Alliance for Progress, by the Foreign Assistance Act of 1961, as amended, and the delegations of authority issued thereunder, I hereby delegate to the Director, United States A.I.D. Mission to Panama, the authority to negotiate, execute and implement a loan agreement (A.I.D. Loan No. 525-U-045) between the Republic of Panama and the United States to assist in institutionalizing an improved integrated public health delivery system to provide basic preventive and curative health care services to and improved environmental sanitation conditions for the Rural Segments of the Panamanian population pursuant to the Loan Authorization signed June 29, 1976.

The authority to negotiate and execute shall be effective until October 26, 1976.

Dated: June 29, 1976.

HERMAN KLEINE,
Deputy U.S. Coordinator.

[FR Doc.76-20688 Filed 7-16-76;8:45 am]

DEPARTMENT OF THE TREASURY

Office of the Secretary

[Public Debt Series—No. 17-76]

TREASURY NOTES OF SERIES P-1978

Invitation for Bids

I. INVITATION FOR TENDERS

1. The Secretary of the Treasury, pursuant to the authority of the Second Liberty Bond Act, as amended, invites tenders on a yield basis for $2,750,000,000, or thereabouts, of notes of the United States, designated Treasury Notes of Series P-1978. The interest rate for the notes will be determined as set forth in Section III, paragraph 3, hereof. Additional amounts of these notes may be issued at the average price of accepted tenders to Government accounts and to Federal Reserve Banks for themselves and as agents of foreign and international monetary authorities. Tenders will be received up to 1:30 p.m., Eastern Daylight Saving time, Tuesday, July 20, 1976, under competitive and noncompetitive bidding, as set forth in Section III hereof.

II. DESCRIPTION OF NOTES

1. The notes will be dated July 30, 1976, and will bear interest from that date, payable on a semiannual basis on January 31, 1977, July 31, 1977, January 31, 1978, and July 31, 1978. They will mature July 31, 1978, and will not be subject to call for redemption prior to maturity.

2. The income derived from the notes is subject to all taxes imposed under the Internal Revenue Code of 1954. The notes are subject to estate, inheritance, gift or other excise taxes, whether Federal or State, but are exempt from all taxation now or hereafter imposed on the principal or interest thereof by any State, or any of the possessions of the United States, or by any local taxing authority.

3. The notes will be acceptable to secure deposits of public moneys. They will not be acceptable in payment of taxes.

4. Bearer notes with interest coupons attached, and notes registered as to principal and interest, will be issued in denominations of $5,000, $10,000, $100,000 and $1,000,000. Book-entry notes will be available to eligible bidders in multiples of those amounts. Interchanges of notes of different denominations and of coupon and registered notes, and the transfer of registered notes will be permitted.

5. The notes will be subject to the general regulations of the Department of the Treasury, now or hereafter prescribed, governing United States notes.

III. TENDERS AND ALLOTMENTS

1. Tenders will be received at Federal Reserve Banks and Branches and at the Bureau of the Public Debt, Washington, D.C. 20226, up to the closing hour, 1:30 p.m., Eastern Daylight Saving time, Tuesday, July 20, 1976. Each tender must state the face amount of notes bid for, which must be $5,000 or a multiple thereof, and the yield desired, except that in the case of noncompetitive tenders the term "noncompetitive" should be used in lieu of a yield. In the case of competitive tenders, the yield must be expressed in terms of an annual yield, with two decimals, e.g., 7.11. Fractions may not be used. Noncompetitive tenders from any one bidder may not exceed $500,000.

2. Commercial banks, which for this purpose are defined as banks accepting demand deposits, and dealers who make primary markets in Government securities and report daily to the Federal Reserve Bank of New York their positions with respect to Government securities and borrowings thereon, may submit tenders for account of customers provided the names of the customers are set forth in such tenders. Others will not be permitted to submit tenders except for their own account. Tenders will be received without deposit from banking institutions for their own account, Federally-insured savings and loan associations, States, political subdivisions or instrumentalities, thereof, public pension and retirement and other public funds, international organizations in which the United States holds membership, foreign central banks and foreign States, dealers who make primary markets in Government securities and report daily to the Federal Reserve Bank of New York their positions with respect to Government securities and borrowings thereon, and Government accounts. Tenders from others must be accompanied by payment of 5 percent of the face amount of notes applied for.

3. Immediately after the closing hour tenders will be opened, following which public announcement will be made by the Department of the Treasury of the amount and yield range of accepted bids. Those submitting competitive tenders will be advised of the acceptance or rejection thereof. In considering the acceptance of tenders, those with the lowest yields will be accepted to the extent required to attain the amount offered. Tenders at the highest accepted yield will be prorated if necessary. After the determination is made as to which tenders are accepted, a coupon rate will be determined at a 1/8 of one percent increment that translates into an average accepted price close to 100.000 and a lowest accepted price above 99.500. That rate of interest will be paid on all of the notes. Based on such interest rate, the price on each competitive tender allotted will be determined and each successful competitive bidder will be required to pay the price corresponding to the yield bid. Price calculations will be carried to three decimal places on the basis of price per hundred, e.g., 99.923, and the determinations of the Secretary of the Treasury shall be final. The Secretary of the Treasury expressly reserves the right to accept or reject any or all tenders, in whole or in part, including the right to accept tenders for more or less than the $2,750,000,000 of notes offered, and his action in any such respect shall be final. Subject to these reservations, noncompetitive tenders for $500,000 or less without stated yield from any one bidder will be accepted in full at the average price[1] (in three decimals) of accepted competitive tenders.

IV. PAYMENT

1. Settlement for accepted tenders in accordance with the bids must be made or completed on or before July 30, 1976, at the Federal Reserve Bank or Branch or at the Bureau of the Public Debt, Washington, D.C. 20226. Payment must be in cash, in other funds immediately available to the Treasury by July 30, 1976, or by check drawn to the order of the Federal Reserve Bank to which the tender is submitted, or the United States Treasury if the tender is submitted to it, which must be received at such Bank or at the Treasury no later than: (1) Tuesday, July 27, 1976, if the check is drawn on a bank in the Federal Reserve District of the Bank to which the check is submitted, or the Fifth Federal Reserve District in the case of the Treasury, or (2) Friday, July 23, 1976, if the check is drawn on a bank in another district. Checks received after the dates set forth in the preceding sentence will not be accepted unless they are payable at a Federal Reserve Bank. Payment will not be deemed to have been completed where registered notes are requested if the appropriate identifying number as required on tax returns and other documents submitted to the Internal Revenue Service (an individual's social security number or an employer identification number) is not furnished. In every case where full payment is not completed, the payment with the tender up to 5 percent of the amount of notes allotted shall, upon declaration made by the Secretary of the Treasury in his discretion, be forfeited to the United States.

V. GENERAL PROVISIONS

1. As fiscal agents of the United States, Federal Reserve Banks are authorized and requested to receive tenders, to make such allotments as may be prescribed by the Secretary of the Treasury, to issue such notices as may be necessary, to receive payment for and make delivery of notes on full-paid tenders allotted, and they may issue interim receipts pending delivery of the definitive notes.

2. The Secretary of the Treasury may at any time, or from time to time, prescribe supplemental or amendatory rules and regulations governing the offering, which will be communicated promptly to the Federal Reserve Banks.

GEORGE H. DIXON,
Acting Secretary of the Treasury.

[FR Doc.76-20933 Filed 7-16-76;9:07 am]

[1] Average price may be at, or more or less than 100.000.

DEPARTMENT OF THE INTERIOR

Bureau of Land Management

[Colorado 17112-RW]

COLORADO

Amendment to Pipeline Right-of-Way: Western Slope Gas Co.

JULY 9, 1976.

Notice is hereby given that, pursuant to Section 28 of the Mineral Leasing Act of 1920 (41 Stat. 449), as amended (30 U.S.C. 185), Western Slope Gas Company, P.O. Box 840, Denver, Colorado 80201, has applied for a 4½ inch o.d. pipeline which is 2805.8 linear feet of additional right-of-way. The right-of-way will be fifty feet (50') in width for a one-year period during construction; thereafter reverting to twenty feet (20') in width and in the following location in Rio Blanco County, Colorado.

T. 2 S., R. 102 W., 6th P.M.
Sec. 18
T. 2 S., R. 103 W., 6th P.M.
Sec. 13

The facility will enable applicant to construct, operate and maintain the subject natural gas gathering pipeline and meet applicant's customer requirements for additional natural gas. The primary purpose of the proposed pipeline is to enable Western Slope Gas Company to convey natural gas from Mt. Fuel Lower Horse Draw No. 24 natural gas well to the Grand Junction, Colorado, market area. area.

The purposes of this notice are: To inform the public that the Bureau of Land Management will be proceeding with the preparation of environmental and other analyses necessary for determining whether the application should be approved and, if so, under what terms and conditions; to allow interested parties to comment on the application, and to allow any persons asserting a claim to the lands or having bona fide objections to the proposed natural gas gathering pipeline right-of-way to file their objections in this office. Any person asserting a claim to the lands or having bona fide objections must include evidence that a copy thereof has been served on the applicant.

Any comment, claim, or objections must be filed with the Chief, Branch of Land Operations, Bureau of Land Management, Colorado State Office, Room 700, Colorado State Bank Building, 1600 Broadway, Denver, Colorado 80202, as promptly as possible after publication of this notice.

ALAN D. CAMPBELL,
Acting Chief, Branch of Land Operations.

[FR Doc.76-20682 Filed 7-16-76;8:45 am]

National Park Service

FIRE ISLAND NATIONAL SEASHORE

Public Meetings on Revised Draft of General Management Plan

Notice is hereby given that the National Park Service, U.S. Department of the Interior, will hold three public meetings on the revised draft General Management Plan for Fire Island National Seashore, Patchogue, New York.

The purpose of the meetings is to obtain public reaction to and comments on the proposed General Management Plan that will be helpful in shaping the final form of these documents.

As announced in a June 25 FEDERAL REGISTER Notice, these meetings will be held in late July. The first meeting will be held at 2 p.m. Saturday, July 24, at the Ocean Beach Community House, Ocean Beach, New York. The second meeting will be held at 7:30 p.m., Tuesday, July 27, at the Saxton Street School, Patchogue, New York. The third meeting will be held at 7:30 p.m., Friday, July 30, at the Bayshore School, 75 West Perkal Street, Bayshore, New York.

Written statements will be accepted for the record at the meetings. Persons wishing to make an oral presentation are asked to send written notice to the Superintendent, Fire Island National Seashore. Since many persons will want to speak, oral presentations should be brief.

Copies of the draft General Management Plan are available for public inspection at Fire Island National Seashore Headquarters, 120 Laurel Street, Patchogue, New York 11772, or at the North Atlantic Region, National Park Service, 150 Causeway Street, Boston, Massachusetts 02114.

Following the last scheduled public meeting, the public will have 30 days to submit written comments on the draft document.

Further information may be obtained by calling Fire Island National Seashore Headquarters at 516-289-4810.

JERRY D. WAGERS,
Regional Director.

[FR Doc.76-20737 Filed 7-16-76;8:45 am]

STONES RIVER NATIONAL BATTLEFIELD AND CEMETERY

Availability and Public Meeting on Environmental Assessment for General Management Plan

An Environmental Assessment considering alternatives for preservation, development, interpretation and public use of Stones River National Battlefield and Cemetery is available for inspection at the Southeast Regional Office of the National Park Service, 1895 Phoenix Boulevard, Atlanta, Georgia 30349 or the Office of the Superintendent, Stones River National Battlefield and Cemetery, Route 2, Old Nashville Highway, Murfreesboro, Tennessee 37130. In addition, as part of the Service's program for public participation in planning, a public meeting to consider the planning alternatives in the assessment will be held on August 13, 1976, at 7 p.m. in the City Council Chambers, second floor of the Police Building at 302 South Church Street, Murfreesboro, Tennessee.

In addition to the alternatives, the assessment considers the nature of the resources, impacts of the various alternatives, mitigating measures to soften the effect of an alternative on the human environment and adverse effects that cannot be avoided should an alternative be implemented. Public comments on the assessment and its alternatives are solicited. Written and oral comments on the assessment and other planning alternatives will be received for consideration at the meeting. In addition, written comments will be received at the offices listed above for a period of 30 days following the public meeting.

Dated: June 30, 1976.

DAVID D. THOMPSON, Jr.,
Regional Director, Southeast Region.

[FR Doc.76-20736 Filed 7-16-76;8:45 am]

Office of the Secretary

[Int DES 76-15]

DEVELOPMENT OF PHOSPHATE RESOURCES IN SOUTHEASTERN IDAHO

Public Hearings

The public hearings on the subject draft environmental statement originally scheduled for June 7, 10, and 14 and subsequently recessed as a result of the Teton dam failure, have been rescheduled for September 7, 9, and 13 at the following locations and addresses:

September 7, Bannock Hotel, 105 South Arthur, Pocatello, Idaho, 1:30 p.m. to 5 p.m. and 7 p.m. to 9 p.m.
September 9, Soda Springs High School, 3rd East First North Street, Soda Springs, Idaho, 8:30 a.m. to noon, 1:30 p.m. to 5 p.m. and 7 p.m. to 9 p.m.
September 13, Holiday Inn, 3300 Vista Avenue, Boise, Idaho, 8:30 a.m. to noon, and 1:30 p.m. to 5 p.m.

If all those wishing to present oral comments cannot be heard during the scheduled time, the hearings will be resumed on the following day and will continue as long as there are persons present to testify. The previous testimony given in Pocatello on June 7 and 8 is under study; the proceedings are being resumed in that city in order to obtain additional information and comments from those who may not have been able to attend the previous sessions.

The hearings are again being held jointly with the U.S. Forest Service for the purpose of receiving comments on its draft environmental statement titled "Management Alternatives for the Diamond Creek Planning Unit."

Anyone wishing to present oral comments on either statement should submit a written request to the Executive Officer, Interagency Task Force, Box 230, Pocatello, Idaho 83201. Requests to present oral testimony may also be made in person during the scheduled hearings. Presentations will be limited to 10 minutes for each person, but they may be supplemented by more complete written material for the record.

The closing date for written comments on the draft statement on resource development has been extended to September 30, 1976. Such comments should be

submitted to the Director, U.S. Geological Survey, National Center, Mail Stop 108, Reston, Virginia 22092.

Dated: July 13, 1976.

HENRY W. COULTER,
Acting Director.

[FR Doc.76-20739 Filed 7-16-76;8:45 am]

DEPARTMENT OF AGRICULTURE

Forest Service

MASSANUTTEN UNIT PLAN

Availability of Draft Environmental Statement

Pursuant to section 102(2)(c) of the National Environmental Policy Act of 1969, the Forest Service, Department of Agriculture, has prepared a draft environmental statement for the Massanutten Unit Plan, George Washington National Forest, USDA-FS-R8-DES (adm.) 76-20.

This unit contains 78,900 acres of National Forest land located in Page, Rockingham, Shenandoah and Warren Counties, Virginia. Major activities include timber harvesting, road construction and land acquisition. Management direction, as proposed, emphasizes dispersed recreation opportunities and protection of soil, air and water quality. There are no major development projects proposed.

This draft environmental statement was transmitted to CEQ July 12, 1976. Copies are available for inspection during regular working hours at the following locations:

USDA, Forest Service, South Agriculture Bldg., Rm. 3230, 12th St. & Independence Ave., SW, Washington, D.C. 20250.
USDA Forest Service, 1720 Peachtree Road, NW., Rm. 804, Atlanta, Georgia 30309.
U.S. Forest Service, 210 Federal Building, P.O. Box 233, Harrisonburg, Virginia 22801.
U.S. Forest Service, Lee Ranger District, Professional Building, Edinburg, Virginia 22824.

A limited number of single copies are available upon request to Forest Supervisor, George Washington National Forest, 210 Federal Building, P.O. Box 233, Harrisonburg, Virginia 22801.

Comments are invited from the public, and from state and local agencies which are authorized to develop and enforce environmental standards, and from Federal agencies having jurisdiction by law or special expertise with respect to any environmental impact involved for which comments have not been requested specifically.

Comments concerning the proposed action and requests for additional information should be addressed to Forest Supervisor, George Washington National Forest, 210 Federal Building, P.O. Box 233, Harrisonburg, Virginia 22801. Comments must be received by September 9, 1976 in order to be considered in the preparation of the final environmental statement.

Dated: July 12, 1976.

THOMAS W. SEARS,
Acting Regional Environmental Coordinator.

[FR Doc.76-20740 Filed 7-16-76;8:45 am]

PRESCOTT NATIONAL FOREST TIMBER MANAGEMENT PROGRAM

Availability of Final Environmental Statement

Pursuant to section 102(2)(3) of the National Environmental Policy Act of 1949, the Forest Service, Department of Agriculture, has prepared a final environmental statement for the Prescott National Forest Timber Management Program, Arizona, USDA-FS-R# FES Adm-76-03.

The environmental statement considers probable environmental effects of the proposed project.

The final environmental statement was transmitted to CEQ on July 12, 1976.

Copies are available for inspection during regular working hours at the following locations:

USDA, Forest Service, So. Agriculture Bldg., Rm. 3230, 14th & Independence Ave., SW., Washington, D.C. 20250.
USDA, Forest Service, Southwestern Region, 517 Gold Avenue, SW., Albuquerque, New Mexico 87102.
Prescott National Forest, 344 South Cortez, P.O. Box 2549, Prescott, Arizona 86301.

Single copies are available upon request to Forest Supervisor, Prescott National Forest, 344 South Cortez, P.O. Box 2549, Prescott, Arizona, 86301. Please refer to the name and number of the environmental statement when ordering.

Copies of the environmental statement have been sent to various Federal, State, and local agencies as outlined in the CEQ guidelines.

WILLARD R. FALLIS,
Acting Regional Forester, Region 3.

JULY 12, 1976.

[FR Doc.76-20670 Filed 7-16-76;8:45 am]

RYAN PARK WINTER SPORT SITE; MEDICINE BOW NATIONAL FOREST

Availability of Final Environmental Statement

Pursuant to section 102(2)(C) of the National Environmental Policy Act of 1969, the Forest Service, Department of Agriculture, has prepared a final environmental statement for Ryan Park Winter Sports Site. The Forest Service Report Number is USDA-FS-R2-FES (Adm) FY-76-05.

This environmental statement concerns a proposal to allocate 280 acres of National Forest land adjacent to Ryan Park, Wyoming for a winter sports site within the Travel Influence Zone pursuant to the Forest Multiple-Use Plan approved in January, 1972. The current allocation of 67 acres for a winter sports site at the nearby Ryan Park Ski Village would be terminated.

The draft environmental statement was transmitted to CEQ on December 19, 1975.

This final environmental statement was transmitted to CEQ on_____

Copies are available for inspection during regular working hours at the following locations:

USDA, Forest Service, So. Agriculture Bldg., Room 3230, 12th St. & Independence Ave. SW., Washington, D.C. 20250.
USDA, Forest Service, 11177 West 8th Avenue, P.O. Box 25127, Denver, Colorado 80225.
USDA, Forest Service, Medicine Bow National Forest, 605 Skyline Drive, Laramie, Wyoming 82070.

A limited number of single copies are available upon request to: Donald L. Rollens, Forest Supervisor, Medicine Bow National Forest, 605 Skyline Drive, Laramie, Wyoming 82070.

Copies of the environmental statement haven been sent to various Federal, State and local agencies as outlined in the CEQ guidelines.

DONALD L. ROLLENS,
Forest Supervisor.

JULY 12, 1976.

[FR Doc.76-20741 Filed 7-16-76;8:45 am]

Soil Conservation Service

FINN CREEK WATERSHED, OKLAHOMA

Availability of Negative Declaration

Pursuant to section 102(2)(C) of the National Environmental Policy Act of 1969; § 1500.6(e) of the Council on Environmental Quality Guidelines (38 FR 20550) August 1, 1973; and § 650.8(b)(3) of the Soil Conservation Service Guidelines (39 FR 19651) June 3, 1974; the Soil Conservation Service, U.S. Department of Agriculture, gives notice that an environmental impact statement is not being prepared for the remaining portion of the Finn Creek Watershed Project, McClain and Garvin Counties, Oklahoma.

The environmental assessment of this federal action indicates that the remaining portion of the project will not create significant adverse local, regional, or national impacts on the environment and that no significant controversy is associated with this portion of the project. As a result of these findings, Mr. Roland E. Willis, State Conservationist, Soil Conservation Service, USDA, USDA Building, Farm Road and Brumley Street, Stillwater, Oklahoma 74074, has determined that the preparation and review of an environmental impact statement is not needed for the remaining portion of the project.

The project concerns a plan for watershed protection, flood prevention, mu-

nicipal water supply and recreation. The planned works of improvement covered by this negative declaration include conservation land treatment supplemented by 2 floodwater retarding structures.

The environmental assessment file is available for inspection during regular working hours and the negative declaration is available for single copy requests at the following location.

Soil Conservation Service, USDA
USDA Building,
Farm Road and Brumley Street,
Stillwater, Oklahoma 74074.

No administrative action on implementation of the proposal will be taken until 15 days after the date of this publication.

(Catalog of Federal Domestic Assistance Program No. 10.904, Flood Control Act—Public Law 78-534, 58 Stat. 905.)

Dated: July 8, 1976.

JOSEPH W. HAAS,
Deputy Administrator for Water Resources, Soil Conservation Service.

[FR Doc.76-20680 Filed 7-16-76;8:45 am]

MILLS CREEK WATERSHED PROJECT, FLORIDA

Availability of Negative Declaration

Pursuant to section 102(2)(C) of the National Environmental Policy Act of 1969; the Council on Environmental Quality Guidelines (40 CFR Part 1500); and the Soil Conservation Service Guidelines (7 CFR Part 650); the Soil Conservation Service, U.S. Department of Agriculture, gives notice that an environmental impact statement is not being prepared for the Mills Creek Watershed Project, Nassau County, Florida.

The environmental assessment of this federal action indicates that the project will not create significant adverse local, regional, or national impacts on the environment and that no significant controversy is associated with the project. As a result of these findings, Mr. William E. Austin, State Conservationist, Soil Conservation Service, has determined that the preparation and review of an environmental impact statement is not needed for this project.

The project concerns a plan for watershed protection and flood prevention. The planned works of improvement include conservation land treatment supplemented by 10.4 miles of channel. All 10.4 miles of channel will be new construction and will have intermittent flow.

The negative declaration is being filed with the Council on Environmental Quality and copies are being sent to various federal, state, and local agencies. The basic data developed during the environmental assessment is on file and may be reviewed by interested parties at the Soil Conservation Service, 234 Federal Building, 401 S.E. First Avenue, P.O. Box 1208, Gainesville, Florida 32602. A limited number of copies of the negative declaration is available from the same address to fill single copy requests.

No administrative action on implementation of the proposal will be taken until August 3, 1976.

(Catalog of Federal Domestic Assistance Program No. 10.904, Watershed Protection and Flood Prevention Program—Public Law 83-566)

Date: July 13, 1976.

JOSEPH W. HAAS,
Deputy Administrator for Water Resources, Soil Conservation Service.

[FR Doc.76-20726 Filed 7-16-76;8:45 am]

PUBLIC ADVISORY COMMITTEE ON SOIL AND WATER CONSERVATION

Meeting

In accordance with section 10(a)(2) of the Federal Advisory Committee Act (Pub. L. 92-463), announcement is made of the following Committee meeting:

Name: Public Advisory Committee on Soil and Water Conservation.

Date: September 29, 30 and October 1, 1976.

Place: United States Department of Agriculture, Room 218-A Administration Building, 13th and Jefferson Drive, SW., Washington, D.C. 20250.

Time: Wednesday and Thursday: 9 a.m. to 4:30 p.m.; Friday: 9 a.m. to 12 m.

Proposed Agenda: The agenda for the meeting will include a review of the progress current programs of soil and water consrevation have made toward maintaining and improving the nation's soil, water and related resources, consideration of alternative methods to enhance program effectiveness and to better solve the problems associated with man's use and treatment of land, and development of recommendations to the Secretary of Agriculture.

Purpose of Meeting: The Committee will consider and recommend changes in soil and water conservation program policies and program emphasis, and will assess the need for new soil and water conservation legislation.

The meeting of the Public Advisory Committee on Soil and Water Conservation is open to the public. Public attendance, depending upon available space, may be limited to those persons who have notified the Administrator, Soil Conservation Service, in writing at least five days prior to the first day of the meeting, of their intention to attend.

Any member of the public may file a written statement with the Committee before, during, or after the meeting. To the extent that time permits the Committee Chairman may allow public presentation of oral statements at the meeting.

All communications regarding this Advisory Committee should be addressed to R. M. Davis, Administrator, Soil Conservation Service, South Building, U.S. Department of Agriculture, 12th and Independence Avenue, Washington, D.C. 20250.

R. M. DAVIS,
Administrator, Soil Conservation Service.

[FR Doc.76-20729 Filed 7-16-76;8:45 am]

DEPARTMENT OF COMMERCE

National Oceanic and Atmospheric Administration

AQUATIC MAMMALS ENTERPRISES

Receipt of Amended Application for Public Display Permit

On January 20, 1976, notice was published in the FEDERAL REGISTER (41 FR 2841) that Aquatic Mammals Enterprises had applied for a permit to take two (2) Atlantic bottlenosed dolphins (*Tursiops truncatus*) for public display.

Aquatic Mammals Enterprises has amended the application in the following respects:

1. To take three (3) Atlantic bottlenose dolphins, rather than two (2) as originally requested;

2. In the initial application, the Applicant stated its intent to lease dolphin shows to approved facilities. The Applicant requests to lease the dolphin shows as follows:

a. One dolphin will be on display at Camden Park, Inc., Huntington, West Virginia;

b. Two dolphins will be maintained at the Applicant's facilities, Key Largo, Florida, until such time as the animals can replace some or all of the animals at Sterling Forest Gardens, Tuxedo, New York. A circular display pool, 36'11" in diameter and approximately 10' deep is furnished by the Applicant to the leasing facilities. The dolphins are maintained at the Applicant's facilities when they are not on display at the leasing facilities.

The remaining aspects of the application are as originally described in the January 20, 1976, Notice of Receipt of Application.

Documents submitted in connection with the above amended application are available for review at the following offices:

Director, National Marine Fisheries Service, 3300 Whitehaven Street, NW., Washington, D.C.; and

Regional Director, National Marine Fisheries Service, Southeast Region, Duval Building, 9450 Gandy Boulevard, St. Petersburg, Florida 33702.

Concurrent with the publication of this notice in the FEDERAL REGISTER the Secretary of Commerce is forwarding copies of this amended application to the Marine Mammal Commission and the Committee of Scientific Advisors.

Interested parties may submit written data or views, or requests for a public hearing, on this application on or before August 18, 1976 to the Director, National Marine Fisheries Service, Department of Commerce, Washington, D.C. 20235. The holding of such a hearing is at the discretion of the Director.

All statements and opinions contained in this notice in support of this application are summaries based on those of the Applicant and do not necessarily reflect the views of the National Marine Fisheries Service.

Dated: July 12, 1976.

HARVEY M. HUTCHINGS,
Acting Associate, Director for Resource Management, National Marine Fisheries Service.

[FR Doc.76-20715 Filed 7-16-76;8:45 am]

JOHN D. HALL

Issuance of Marine Mammals and Endangered Species Permit

On April 23, 1976, notice was published in the FEDERAL REGISTER (41 F.R. 16997) that John D. Hall, U.S. Fish and Wildlife Service, Office of Coastal Ecosystems, 800 A Street, Suite 110, Anchorage, Alaska 99501, had applied for a Permit for Scientific Research under the Marine Mammal Protection Act of 1972 (16 U.S.C. 1361-1407), and for Scientific Purposes under the Endangered Species Act of 1973 (16 U.S.C. 1531-1543) to take, by tagging, 580 cetaceans of the following species: Dall porpoise (*Phocoenoides dalli*), harbor porpoise (*Phocoena phocoena*), killer whale (*Orcinus orca*), minke whale (*Balaenoptera acutorostrata*), fin whale (*Balenoptera physalus*), and humpback whale (*Megaptera novaeangliae*). The fin whale and humpback whale are listed as endangered under the Endangered Species Act of 1973.

Notice is hereby given that, on July 12, 1976, the National Marine Fisheries Service issued a Permit for Scientific Research as authorized by the Marine Mammal Protection Act of 1972, and for Scientific Purposes as authorized by the Endangered Species Act of 1973, to the Office of Coastal Ecosystems, U.S. Fish and Wildlife Service, Department of the Interior, Anchorage, Alaska, for the above described taking and subject to certain conditions set forth therein. Issuance of the Permit is based, as required by the Endangered Species Act of 1973, on a finding that such permit (1) was applied for in good faith; (2) if granted and exercised, will not operate to the disadvantage of the endangered species which are the subject of the Permit application, and (3) will be consistent with the purposes and policies set forth in Section 2 of the Endangered Species Act of 1973.

The Permit is available for review by interested persons in the following offices:

Director, National Marine Fisheries Service, 3300 Whitehaven Street, NW., Washington, D.C. 20235;
Director, National Marine Fisheries Service, Alaska Region, P.O. Box 1668, Juneau, Alaska 99802.

Dated: July 12, 1976.

ROBERT W. SCHONING,
Director,
National Marine Fisheries Service.

[FR Doc.76-20716 Filed 7-16-76;8:45 am]

MONTREAL AQUARIUM

Receipt of Application for Public Display Permit

Notice is hereby given that the following Applicant has applied in due form for a permit to take marine mammals for public display as authorized by the Marine Mammal Protection Act of 1972 (16 U.S.C. 1361-1407) and the Regulations Governing the Taking and Importing of Marine Mammals.

Montreal Aquarium, St. Helens' Island, Montreal, Quebec, Canada, to take four (4) Atlantic bottlenosed dolphins (*Tursiops truncatus*) for public display.

The bottlenosed dolphins will be taken by a professional collector from waters off the coast of Florida, by means of standard shallow water net techniques.

The dolphins will be maintained and displayed in the Alcon Dolphin Pool pavilion of the Montreal Aquarium. The pavilion consists of a main pool, 80 feet in length, 30 feet in width and from 12 to 14 feet deep; and five holding, training and reserve tanks, 5 feet deep, with a composite surface area of 1,250 square feet.

The arrangements and facilities for transporting and maintaining the requested marine mammals have been inspected by a licensed veterinarian, who has certified that such arrangements and ficilities are adequate to provide for the well-being of the marine mammals involved.

All statements and opinions contained above in this notice in support of this application are summaries based on those of the Applicant and do not necessarily reflect the views of the National Marine Fisheries Service.

As a request for a permit to take living marine mammals to be maintained in areas outside the jurisdiction of the United States, this application has been submitted in accordance with National Marine Fisheries Service policy concerning such applications (40 F.R. 11614, March 12, 1975). In this regard, the application:

(a) Was submitted to the Director, NMFS, through the Fishing Services Directorate, Fisheries and Marine Service, Environment Canada;

(b) Includes:

i. A certification from the Fishing Services Directorate that the information set forth in the application is correct;

ii. A certification from the Ministry of Tourism, Hunting and Fishing, Province of Quebec, Canada, that the Government of the Province of Quebec is prepared to enforce the terms and conditions of the permit, and will do so, if and when necessary; and

iii. A statement that the Fishing Services Directorate will concur in a NMFS decision to amend, suspend or revoke a permit, through voiding the Permit issued by the Directorate which authorizes acquisition of the requested animals.

In accordance with the above cited policy, the certifications and statements of the Fishing Services Directorate, Fisheries and Marine Service, Environment Canada, and the Ministry of Tourism, Hunting and Fishing, Province of Quebec, have been found appropriate and sufficient to allow consideration of this permit application.

Documents submitted in connection with the above application are available for review in the following offices:

Director, National Marine Fisheries Service, 3300 Whitehaven Street, NW., Washington, D.C.; and
Regional Director, National Marine Fisheries Service, Southeast Region, Duval Building, 9450 Gandy Boulevard, St. Petersburg, Florida 33702.

Concurrent with the publication of this notice in the FEDERAL REGISTER, the Secretary of Commerce if forwarding copies of the application to the Marine Mammal Commission and its Committee of Scientific Advisors.

Interested parties may submit written data or views, or requests for a public hearing on this application to the Director, National Marine Fisheries Service, Department of Commerce, Washington, D.C. 20235, or on before August 18, 1976. Those individuals requesting a hearing should set forth the specific reasons why a hearing on this particular application would be appropriate. The holding of such hearing is at the discretion of the Director.

Dated: July 13, 1976.

HARVEY M. HUTCHINGS,
Acting Associate for Resource Management, National Marine Fisheries Service.

[FR Doc.76-20717 Filed 7-16-76;8:45 am]

DEPARTMENT OF HEALTH, EDUCATION, AND WELFARE

Food and Drug Administration

[Docket No. 75N-0331]

FIELD LIMITATION AND ALIGNMENT FOR MAMMOGRAPHY EQUIPMENT

Open Meeting

The Food and Drug Administration (FDA) announces a meeting to be held July 21, 1976 to discuss proposed amendments to the diagnostic x-ray equipment performance standard.

The Commissioner of Food and Drugs issued in the FEDERAL REGISTER of February 23, 1976 (41 FR 7957), proposed amendments to the performance standard for diagnostic x-ray equipment (21 CFR 1020.31) regarding field limitation and alignment, beam transmission, and exposure reproducibility. Analysis of the comments received (on file with the Hearing Clerk, Food and Drug Administration) indicates that modification of the proposed amendments as they relate to mammographic equipment may be necessary. In particular, inconsistencies in the proposed labeling requirements and difficulties in the proposed field limitation and alignment criteria have been noted.

Several manufacturers and one manufacturers' association have expressed the desire to meet with FDA to discuss the proposed field limitation and alignment amendments as applied to currently mar-

keted mammographic systems and attachments. Such a meeting may benefit the development of the proposed amendments by aiding in the evaluation of the reasonableness and technical and clinical feasibility of the requirements.

Accordingly, an open meeting to discuss the subject will be held on July 21, 1976, at 9 a.m. in Rm. 400 of the Bureau of Radiological Health, 12720 Twinbrook Parkway, Rockville, MD 20852. Any person wishing to attend and/or participate in the meeting should contact Dr. Harvey Rudolph, Bureau of Radiological Health, (301) 443-3426.

Dated: July 13, 1976.

JOSEPH P. HILE,
Acting Associate Commissioner for Compliance.

[FR Doc.76-20709 Filed 7-16-76;8:45 am]

[NADA No. 13-634V]

TEMARIL-P GRANULETS

Withdrawal of Approval of New Animal Drug Application

Under the Federal Food, Drug, and Cosmetic Act (sec. 512, 82 Stat. 343-351 (21 U.S.C. 360b)) and under authority delegated to the Commissioner of Food and Drugs (21 CFR 2.120), the following notice is issued:

The Food and Drug Administration (FDA) is withdrawing approval of the new animal drug application (NADA) No. 13-634V held by Norden Laboratories, Inc., Lincoln, NE 68521, which provides for use of Temaril-P Granulets (trimeprazine and prednisolone) as an antipruritic in dogs and cats and as an antitussive in dogs and horses.

Based on a reevaluation of the application, FDA requested that the firm submit information concerning the efficacy of the combination drug, and information concerning manufacturing and control procedures. In lieu of submitting the requested information, the firm stated that the product is no longer being marketed, requested withdrawal of approval of the application, and waived an opportunity for hearing.

Therefore, in accordance with § 514.-115 *Withdrawal of approval of applications* (21 CFR 514.115), notice is given that approval of NADA No. 13-634V and all supplements and amendments thereto is hereby withdrawn, effective July 19, 1976.

Dated: June 13, 1976.

C. D. VAN HOUWELING,
Director, Bureau of Veterinary Medicine.

[FR Doc.76-20711 Filed 7-16-76;8:45 am]

Health Services Administration

CALIFORNIA

Designation of Conditional Professional Standards Review Organization for PSRO Area VIII

Notice is hereby given that the Secretary of Health, Education, and Welfare pursuant to section 1154 of the Social Security Act has redesignated a conditional professional standards review organization (PSRO) and, pursuant to section 1152(a) of the Social Security Act, has entered into an agreement with, the San Joaquin Area PSRO for PSRO Area VIII of California, which area is designated a Professional Standards Review Organization area in 42 CFR 101.4.

The Secretary has determined that the San Joaquin Area PSRO is qualified to continue to assume the duties and responsibilities of a Professional Standards Review Organization as specified in Title XI, Part B of the Social Security Act. The aforementioned organization is incorporated, according to the laws of the State of California, as a nonprofit professional organization whose membership is voluntary and comprises at least 25 percent of the licensed doctors of medicine or osteopathy engaged in active practice in PSRO Area VIII of California.

The principal officers of the San Joaquin Area PSRO are:

NAME AND OFFICE HELD

1. Harvey I. Goodman, M.D., President
2. Joseph Brakovec, M.D., Vice President
3. Edward Schroeder, Secretary-Treasurer

The official address of the corporation is 540 East Market Street (P.O. Box 230), Stockton, California 95201.

Dated: July 1, 1976.

LOUIS M. HELLMAN,
Administrator, Health Services Administration.

[FR Doc.76-20367 Filed 7-16-76;8:45 am]

COLORADO

Redesignation of Conditional Professional Standards Review Organization

Notice is hereby given that the Secretary of Health, Education, and Welfare pursuant to section 1154 of the Social Security Act has redesignated a conditional professional standards review organization (PSRO) and, pursuant to section 1152(a) of the Social Security Act, has entered into an agreement with, the Colorado Foundation for Medical Care for the State of Colorado, which area is designated a Professional Standards Review Organization in 42 CFR 101.4.

The Secretary has determined that the Colorado Foundation for Medical Care is qualified to continue to assume the duties and responsibilities of a Professional Standards Review Organization as specified in Title XI, Part B of the Social Security Act. The aforementioned organization is incorporated, according to the laws of the State of Colorado, as a nonprofit professional organization whose membership is voluntary and comprises at least 25 percent of the licensed doctors of medicine or osteopathy engaged in active practice in the State of Colorado.

The principal officers of the Colorado Foundation for Medical Care are:

NAME AND OFFICE HELD

1. Joseph S. Pollard, Jr., M.D., President
2. Joseph G. Merrill, M.D., Vice President
3. Frederick Lewis, M.D., Secretary
4. Kenneth Lovell, M.D., Treasurer

The official address of the corporation is 1601 East 19th Avenue, Denver, Colorado 80218.

Dated: July 1, 1976.

LOUIS M. HELLMAN,
Administrator, Health Services Administration.

[FR Doc.76-20368 Filed 7-16-76;8:45 am]

MARYLAND

Redesignation of Conditional Professional Standards Review Organization for PSRO Area IV

Notice is hereby given that the Secretary of Health, Education, and Welfare pursuant to section 1154 of the Social Security Act has redesignated a conditional professional standards review organization (PSRO) and, pursuant to section 1152(a) of the Social Security Act, has entered into an agreement with, the Prince Georges Foundation for Medical Care, Inc., for PSRO Area IV of Maryland, which area is designated a Professional Standards Review Organization area in 42 CFR 101.4.

The Secretary has determined that the Prince Georges Foundation for Medical Care, Inc. is qualified to continue to assume the duties and responsibilities of a Professional Standards Review Organization as specified in Title XI, Part B, of the Social Security Act. The aforementioned organization is incorporated, according to the laws of the State of Maryland, as a nonprofit professional organization whose membership is voluntary and comprises at least 25 percent of the licensed doctors of medicine or osteopathy engaged in active practice in PSRO Area IV of Maryland.

The principal officers of the Prince Georges Foundation for Medical Care, Inc., are:

NAME AND OFFICE HELD

1. Barry Rosenberg, M.D., President
2. John Bayley, M.D., Vice President
3. Lewis M. Damiano, Secretary
4. Steven C. Sandler, Treasurer

The official address of the corporation is 6801 Kenilworth Avenue, Berkshire Building, Suite 310, Riverdale, Maryland 20840.

Dated: July 1, 1976.

LOUIS M. HELLMAN,
Administrator, Health Services Administration.

[FR Doc.76-20369 Filed 7-16-76;8:45 am]

MASSACHUSETTS

Redesignation of Conditional Professional Standards Review Organization for PSRO Area IV

Notice is hereby given that the Secretary of Health, Education, and Welfare pursuant to section 1154 of the Social Security Act has redesignated a conditional professional standards review organization (PSRO) and pursuant to section 1152(a) of the Social Security Act,

has entered into an agreement with, the Bay State PSRO, Inc. for PSRO Area IV of Massachusetts, which area is designated a Professional Standards Review Organization area in 42 CFR 101.4.

The Secretary has determined that the Bay State PSRO, Inc. is qualified to continue to assume the duties and responsibilities of a Professional Standards Review Organization as specified in Title XI, Part B of the Social Security Act. The aforementioned organization is incorporated, according to the laws of the State of Massachusetts, as a nonprofit professional organization whose membership is voluntary and comprises at least 25 percent of the licensed doctors of medicine or osteopathy engaged in active practice in PSRO Area IV of Massachusetts.

The principal officers of the Bay State PSRO, Inc. are:

NAME AND OFFICE HELD

1. Robert J. Brennan, President
2. Curtis Prout, Vice President
3. Russell Rowell, Clerk
4. Edward T. Hanley, Treasurer

The official address of the corporation is 100 Charles River Plaza, Boston, Massachusetts.

Dated: July 1, 1976.

LOUIS M. HELLMAN,
Administrator,
Health Services Administration.

[FR Doc.76-20370 Filed 7-16-76;8:45 am]

MASSACHUSETTS

Redesignation of Conditional Professional Standards Review Organization for PSRO Area III

Notice is hereby given that the Secretary of Health, Education, and Welfare pursuant to section 1154 of the Social Security Act has redesignated a conditional professional standards review organization (PSRO) and, pursuant to section 1152(a) of the Social Security Act, has entered into an agreement with, the Charles River Health Care Foundation for PSRO Area III of Massachusetts, which area is designated a Professional Standards Review Organization area in 42 CFR 101.4.

The Secretary has determined that the Charles River Health Care Foundation is qualified to continue to assume the duties and responsibilities of a Professional Standards Review Organization as specified in Title XI, Part B of the Social Security Act. The aforementioned organization is incorporated, according to the laws of the State of Massachusetts, as a nonprofit professional organization whose membership is voluntary and comprises at least 25 percent of the licensed doctors of medicine or osteopathy engaged in active practice in PSRO Area III of Massachusetts.

The principal officers of the Charles River Health Care Foundation are:

NAME AND OFFICE HELD

1. Richard C. Kerr, President
2. Thomas J. Carnicelli, Vice President
3. Joshua J. Hurwitz, Secretary
4. Gertrude E. Murray, Treasurer

The official address of the corporation is 25 Walnut Street, Wellesley, Massachusetts 02181.

Dated: July 1, 1976.

LOUIS M. HELLMAN,
Administrator,
Health Services Administration.

[FR Doc.76-20371 Filed 7-16-76;8:45 am]

MINNESOTA

Redesignation of Conditional Professional Standards Review Organization for PSRO Area II

Notice is hereby given that the Secretary of Health, Education, and Welfare pursuant to section 1154 of the Social Security Act has redesignated a conditional professional standards review organization (PSRO) and, pursuant to section 1152(a) of the Social Security Act, has entered into an agreement with, the Foundation for Health Care Evaluation for PSRO Area II of Minnesota, which area is designated a Professional Standards Review Organization Area in 42 CFR 101.4.

The Secretary has determined that the Foundation for Health Care Evaluation is qualified to continue to assume the duties and responsibilities of a Professional Standards Review Organization as specified in Title XI, Part B of the Social Security Act. The aforementioned organization is incorporated, according to the laws of the State of Minnesota, as a nonprofit professional organization whose membership is voluntary and comprises at least 25 percent of the licensed doctors of medicine or osteopathy engaged in active practice in PSRO Area II of Minnesota.

The principal officers of the Foundation for Health Care Evaluation are:

NAME AND OFFICE HELD

1. Richard B. Carley, M.D., Chairman
2. John J. Regan, M.D., President
3. Donald C. Bell, M.D., President-Elect
4. Merle S. Mark, M.D., 1st Vice President

The official address of the corporation is Northwestern National Life Insurance Building, Suite 400, 20 Washington Avenue, South Minneapolis, Minnesota 55402.

Dated: July 1, 1976.

LOUIS M. HELLMAN,
Administrator,
Health Services Administration.

[FR Doc.76-20372 Filed 7-16-76;8:45 am]

MISSISSIPPI

Redesignation of Conditional Professional Standards Review Organization

Notice is hereby given that the Secretary of Health, Education, and Welfare pursuant to section 1154 of the Social Security Act has redesignated a conditional professional standards review organization (PSRO) and, pursuant to section 1152(a) of the Social Security Act, has entered into an agreement with, the Mississippi Foundation for Medical Care for the State of Mississippi, which area is designated a Professional Standards Review Organization area in 42 CFR 101.4.

The Secretary has determined that the Mississippi Foundation for Medical Care is qualified to continue to assume the duties and responsibilities of a Professional Standards Review Organization as specified in Title XI, Part B of the Social Security Act. The aforementioned organization is incorporated, according to the laws of the State of Mississippi, as a nonprofit professional organization whose membership is voluntary and comprises at least 25 percent of the licensed doctors of medicine or osteopathy engaged in active practice in the State of Mississippi.

The principal officers of the Mississippi Foundation for Medical Care are:

NAME AND OFFICE HELD

1. Sidney Graces, M.D., Chairman
2. W. B. Johnson, M.D., Chairman of Executive Committee
3. Tom Mitchell, M.D., Secretary

The official address of the corporation is 1900 North West Street, P.O. Box 4665, Jackson, Mississippi 39216.

Dated: July 1, 1976.

LOUIS M. HELLMAN,
Administrator,
Health Services Administration.

[FR Doc.76-20373 Filed 7-16-76;8:45 am]

OREGON

Redesignation of Conditional Professional Standards Review Organization for PSRO Area I

Notice is hereby given that the Secretary of Health, Education, and Welfare pursuant to section 1154 of the Social Security Act has redesignated a conditional professional standards review organization (PSRO) and, pursuant to section 1152(a) of the Social Security Act, has entered into an agreement with the Multnomah Foundation for Medical Care for PSRO Area I of Oregon, which area is designated a Professional Standards Review Organization area in 42 CFR 101.4.

The Secretary has determined that the Multnomah Foundation for Medical Care is qualified to continue to assume the duties and responsibilities of a Professional Standards Review Organization as specified in Title XI, Part B, of the Social Security Act. The aforementioned organization is incorporated, according to the laws of the State of Oregon, as a nonprofit professional organization whose membership is voluntary and comprises at least 25 percent of the licensed doctors of medicine or osteopathy engaged in active practice in PSRO Area I of Oregon.

The principal officers of the Multnomah Foundation for Medical Care are:

NAME AND OFFICE HELD

1. John W. Bussman, M.D., President
2. Ernest H. Price, M.D., Vice President
3. Marvin J. Urman, M.D., Secretary
4. Frank A. Trostel, D.O., Treasurer

The official address of the corporation is 5201 SW. Westgate Drive, Portland, Oregon 97221.

Dated: July 1, 1976.

LOUIS M. HELLMAN,
Administrator,
Health Services Administration.

[FR Doc.76-20374 Filed 7-16-76;8:45 am]

TENNESSEE

Redesignation of Conditional Professional Standards Review Organization for PSRO Area II

Notice is hereby given that the Secretary of Health, Education, and Welfare pursuant to section 1154 of the Social Security Act has redesignated a conditional professional standards review organization (PSRO) and, pursuant to section 1152(a) of the Social Security Act, has entered into an agreement with, the Tennessee Foundation for Medical Care for PSRO Area II of Tennessee, which area is designated a Professional Standards Review Organization are in 42 CFR 101.4.

The Secretary has determined that the Tennessee Foundation for Medical Care is qualified to continue to assume the duties and responsibilities of a Professional Standards Review Organization as specified in Title XI, Part B of the Social Security Act. The aforementioned organization is incorporated, according to the laws of the State of Tennessee, as a nonprofit professional organization whose membership is voluntary and comprises at least 25 percent of the licensed doctors of medicine or osteopathy engaged in active practice in PSRO Area II of Tennessee.

The principal officers of the Tennessee Foundation for Medical Care are:

NAME AND OFFICE HELD

1. Morris Kochtitzky, M.D., President
2. George A. Zirkle, Jr., M.D., Vice President
3. Charles B. Thorne, M.D., Secretary-Treasurer

The official address of the corporation is 4301 Hillsboro Road, Nashville, Tennessee 37215.

Dated: July 1, 1976.

LOUIS M. HELLMAN,
Administrator,
Health Services Administration.

[FR Doc.76-20375 Filed 7-16-76;8:45 am]

UTAH

Redesignation of Conditional Professional Standards Review Organization

Notice is hereby given that the Secretary of Health, Education, and Welfare pursuant to section 1154 of the Social Security Act has redesignated a conditional professional standards review organization (PSRO) and, pursuant to section 1152(a) of the Social Security Act, has entered into an agreement with, the Utah Professional Standards Review Organization for the State of Utah, which area is designated a Professional Standards Review Organization area in 42 CFR 101.4.

The Secretary has determined that the Utah Professional Standards Review Organization is qualified to continue to assume the duties and responsibilities of a Professional Standards Review Organization as specified in Title XI, Part B of the Social Security Act. The aforementioned organization is incorporated, according to the laws of the State of Utah, as a nonprofit professional organization whose membership is voluntary and comprises at least 25 percent of the licensed doctors of medicine or osteopathy engaged in active practice in the State of Utah.

The principal officers of the Utah Professional Standards Review Organization are:

NAME AND OFFICE HELD

1. J. Louis Schricker, Jr., M.D., President
2. W. Knox Fitzpatrick, M.D., Vice President
3. Stanley Child, M.D., Secretary
4. Vacant

The official address of the corporation is 555 East Second Street, Suite 208, Salt Lake City, Utah 84102.

Dated: July 1, 1976.

LOUIS M. HELLMAN,
Administrator,
Health Services Administration.

[FR Doc.76-20376 Filed 7-16-76;8:45 am]

WYOMING

Redesignation of Conditional Professional Standards Review Organizations

Notice is hereby given that the Secretary of Health, Education, and Welfare pursuant to section 1154 of the Social Security Act has redesignated a conditional professional standards review organization (PSRO) and, pusuant to section 1152(a) of the Social Security Act, has entered into an agreement with the Wyoming Health Services Company, Inc., for the State of Wyoming, which area is designated a Professional Standards Review Organization area in 42 CFR 101.4.

The Secretary has determined that the Wyoming Health Services Company, Inc. is qualified to continue to assume the duties and responsibilities of a Professional Standards Review Organization as specified in Title XI, Part B, of the Social Security Act. The aforementioned organization is incorporated, according to the laws of the State of Wyoming, as a nonprofit professional organization whose membership is voluntary and comprises at least 25 percent of the licensed doctors of medicine or osteopathy engaged in active practice in the State of Wyoming.

The principal officers of the Wyoming Health Services Company, Inc. are:

NAME AND OFFICE HELD

1. F. M. Downing, M.D., President
2. John J. Corbett, M.D., Vice President
3. John O. Yale, Secretary-Treasurer

The official address of the corporation is 2727 O'Neil Avenue P.O. Box 4009, Cheyenne, Wyoming 82001.

Dated: July 1, 1976.

LOUIS M. HELLMAN,
Administrator,
Health Services Administration.

[FR Doc.76-20377 Filed 7-16-76;8:45 am]

Office of Education

NATIONAL ADVISORY COUNCIL FOR CAREER EDUCATION

Public Meeting

Correction

In FR Doc. 76-19785, appearing at page 28345 in the issue for Friday, July 9, 1976, in the sixth line of the first paragraph change the year "1975" to "1976".

DEPARTMENT OF TRANSPORTATION

Coast Guard

[CGD 76-146]

POINT PLEASANT CANAL; POINT PLEASANT, NEW JERSEY

Public Hearing Concerning Proposed Bridge Alteration and Regulations

Notice is hereby given that a public hearing regarding the State of New Jersey, Department of Transportation State Highway 88 bridge across Point Pleasant Canal, mile 3.0 on the Intracoastal Waterway, at Point Pleasant, New Jersey, will be held on Friday, August 20, 1976, at 8 p.m., at the Kings Grant Inn, Regency Room, Route 70 at River Road, Point Pleasant, New Jersey. This hearing is being held under the authority of Section 3 of the Act of June 21, 1940 (Truman-Hobbs Act) and 33 U.S.C. 499.

The existing bridge, which has a double-leaf bascule span, provides a horizontal clearance of 47 feet through the opening and a vertical clearance of 10 feet above mean high water in the closed position. A number of complaints have been received alleging that the bridge is unreasonably obstructive to navigation. The purpose of the hearing is to determine whether alteration of the structure is needed, and if so, what alteration is required, having due regard for the necessity of free, easy, and unobstructed navigation upon the waterway. Also, the implementation of more restrictive operation regulations to more nearly meet the needs of land traffic will be considered.

Public comments, views, and data are considered essential for ascertaining whether the bridge unreasonably obstructs navigation, whether vessels have unreasonable difficulty and delay in passing through the bridge, the extent of costs associated with collisions, swampings, and delays to navigation, the character and amount of vessel traffic affected, whether the vessel traffic affected is sufficient to justify alteration of or establishment of more restrictive regulations for the bridge, changes necessary to render navigation through or under the bridge reasonably free and unobstructed, and the impacts of the bridge alteration, if made, or restrictive regulations, if implemented, upon the quality of the human environment.

Any person who wishes to appear and be heard at this public hearing may do

so. Persons planning to appear and be heard are requested to notify the Commander (oan), Third Coast Guard District, Bridge Section, Governors Island, New York, New York 10004, any time prior to August 18, 1976 indicating the amount of time required for testimony. Depending upon the number of scheduled statements, it may be necessary to limit the amount of time allocated to each person. Limitations of time allocated, if required, will be announced at the beginning of the hearing. Written statements and exhibits may be submitted in place of or in addition to oral statements and will be made a part of the record of the hearing. Such written statements and exhibits may be delivered at the hearing or mailed in advance to the Commander (oan), Third Coast Guard District.

(54 Stat. 498, 33 U.S.C. 513; Sec. 4(f), 80 Stat. 934, as amended, 49 U.S.C. 1653(f); Sec. 6(g)(3), 80 Stat. 937, 49 U.S.C. 1655(g)(3); 33 CFR 116.20; 49 CFR 1.46(c)(6); sec. 5, 28 Stat. 362, as amended, sec. 6(g)(2), 80 Stat. 937; 33 U.S.C. 499, 49 U.S.C. 1655(g)(2); 49 CFR 1.46(c)(5), 33 CFR 1.05-1(c)(4).)

Dated: July 15, 1976.

A. F. FUGARO,
Rear Admiral, U.S. Coast Guard, Chief, Office of Marine Environment and Systems.

[FR Doc.76-20989 Filed 7-16-76;9:40 am]

CIVIL AERONAUTICS BOARD

[Docket 29056]

GLOBUS-GATEWAY TOURS, LTD.

Foreign Indirect Air Carrier Renewal and Amendment (Swiss); Prehearing Conference and Hearing

Notice is hereby given that a prehearing conference in this proceeding is assigned to be held on September 20, 1976, at 9:30 a.m. (local time), in Room 1003, Hearing Room B, Universal Building North, 1875 Connecticut Avenue, NW., Washington, D.C., before Administrative Law Judge Ronnie A. Yoder.

Notice is also given that the hearing may be held immediately following conclusion of the prehearing conference unless a person objects and shows reason for postponement on or before August 27, 1976.

Ordinary transcript will be adequate for the proper conduct of this proceeding.

Dated at Washington, D.C., July 14, 1976.

ROBERT L. PARK,
Chief Administrative Law Judge.

[FR Doc.76-20790 Filed 7-16-76;8:45 am]

[Docket 27114 etc.]

PAN AMERICAN WORLD AIRWAYS, INC.-TRANS WORLD AIRLINES, INC.

Route Transfer Proceeding; Assignment of Proceeding

This is to advise that this proceeding will be conducted by the undersigned.

The procedural schedule set forth in Appendix A to Order 76-7-40 will be strictly observed.

It is requested that *two* copies of all pleadings, when filed, and all exhibits, when exchanged, be furnished to the undersigned.

Dated at Washington, D.C., July 13, 1976.

ROBERT L. PARK,
Chief Administrative Law Judge.

[FR Doc.76-20791 Filed 7-16-76;8:45 am]

FEDERAL COMMUNICATIONS COMMISSION

[Report No. 930]

ACTIONS IN RULE MAKING PROCEEDINGS

Petitions for Reconsideration

JULY 14, 1976.

Docket or RM No.	Rule No.	Subject	Date received
20070	Sec. 73.202(b)	Amendment of sec. 73.202(b), table of assignments, FM broadcast stations (Ogallala, Nebr.). Filed by John L. Tierney, attorney for Industrial Business Corp.	[1] July 7, 1976
20129	Sec. 73.202(b)	Amendment of sec. 73.202(b), table of assignments, FM broadcast stations (Muncie, Ind.). Filed by Arthur B. Goodkind, attorney for McGraw-Hill Broadcasting Co., Inc.	July 1, 1976
20733	Sec. 73.202(b)	Amendment of sec. 73.202(b), table of assignments, FM broadcast stations (Plymouth, Ohio, Randolph, Vt., Chariton, Iowa, Honesdale, Pa., Gatlinburg, Tenn., Clyde, Ohio). Filed by John R. Wilner, attorney for WOBL Radio, Inc.	July 2, 1976

[1] Application for review.

NOTE.—Oppositions to petitions for reconsideration must be filed within 15 d after publication of this public notice in the FEDERAL REGISTER. Replies to an opposition must be filed within 10 d after time for filing oppositions has expired.

FEDERAL COMMUNICATIONS COMMISSION,
VINCENT J. MULLINS,
Secretary.

[FR Doc.76-20735 Filed 7-16-76;8:45 am]

CANADIAN BROADCAST STATIONS

Notification List

List of new stations, proposed changes in existing stations, deletions, and corrections in assignments of Canadian standard broadcast stations modifying the assignments of Canadian broadcast stations contained in the Appendix to the Recommendations of the North American Regional Broadcasting Agreement Engineering Meeting January 30, 1941.

Canadian list No. 357, June 24, 1976

Call letters	Location	Power (kilowatts)	Antenna	Schedule	Class	Antenna height (feet)	Ground system: Number of radials	Ground system: Length (feet)	Proposed date of commencement of operation
CKAP (now in operation)	Kapuskasing, Ontario, N. 49°23'17", W. 82°23'52".	580 kHz 10D/1N	DA-N ND-D-175	U	III				
CJON (now in operation)	St. John's, Nfld., N. 47°34'45", W. 52°47'15".	930 kHz 25	DA-2	U	III				
CBV (PO N. 46°43'43", W. 71°12'12", 980 kHz, 5 kW, DA-1).	Quebec, Quebec, N. 46°41'06", W. 71°23'55".	980 kHz 50	DA-1	U	III				E.I.O. June 24, 1977.
CKLD (vide 1330 kHz)	Thetford Mines, Quebec, N. 46°05'57", W. 71°16'13".	1250 kHz 1D/0.25N	ND-184	U	IV	133	120	320	
(New)	Disraeli, Quebec, N. 45°54'28", W. 71°20'33".	1230 kHz 1D/0.25N	ND-176	U	IV	133	120	425	Do.
CKLD (PO N. 46°05'57", W. 71°16'13", 1230 kHz, 1kWD/0.25kWN, ND-184, U, IV).	Thetford Mines, Quebec, N. 46°03'55", W. 71°23'16".	1330 kHz 10	DA-1	U	III				Do.
CHRD (correction to coordinates).	Drummondville, Quebec, N. 45°47'47", W. 72°29'04".	1480 kHz 10	DA-2	U	III				Immediately.
CKOY (now in operation)	Tillsonburg, Ontario, N. 42°44'03", W. 80°39'19".	1510 kHz 10	DA-D	D	II				

WALLACE E. JOHNSON,
Chief, Broadcast Bureau, Federal Communications Commission.

[FR Doc.76-20542 Filed 7-16-76;8:45 am]

[Report No. 814]

COMMON CARRIER SERVICES INFORMATION

Applications Accepted for Filing

JULY 12, 1976.

By the Chief, Common Carrier Bureau: The applications listed herein have been found, upon initial review, to be acceptable for filing. The Commission reserves the right to return any of these applications, if upon further examination, it is determined they are defective and not in conformance with the Commission's Rules and Regulations or its policies.

Final action will not be taken on any of these applications earlier than 31 days following the date of this notice, except for radio applications not requiring a 30 day notice period (see § 309(c) of the Communications Act), applications filed under Part 68, or as otherwise noted. Unless specified to the contrary, comments or petitions may be filed concerning radio and section 214 applications within 30 days of the date of this notice and within 20 days for Part 68 applications.

In order for an application filed under Part 21 of the Commission's Rules (Domestic Public Radio Services) to be considered mutually exclusive with any other such application appearing herein, it must be substantially complete and tendered for filing by whichever date is earlier: (a) the close of business one business day preceding the day on which the Commission takes action on the previously filed application; or (b) within 60 days after the date of the public notice listing the first prior filed application (with which the subsequent application is in conflict) as having been accepted for filing. In common carrier radio services other than those listed under Part 21, the cut-off date for filing a mutually exclusive application is the close of business one business day preceding the day on which the previously filed application is designated for hearing. With limited exceptions, an application which is subsequently amended by a major change will be considered as a newly filed application for purposes of the cut-off rule. [See § 1.227(b)(3) and § 21.30(b) of the Commission's rules.]

FEDERAL COMMUNICATIONS COMMISSION,
VINCENT J. MULLINS,
Secretary.

DOMESTIC PUBLIC LAND MOBILE RADIO SERVICE

21960-CD-P-76, L. Warren Stewart and David H. Smith d.b.a. Metro-Radio N 88 W (KUC977) C.P. to change power operating on 152.18 MHz located at W260-N6035 Maryhill Road, Sussex, Wisconsin.

22381-CD-P-(2)-76, Roger Wright d.b.a. Prospect Communications (New), C.P. for a new station to operate on 454.150 and 454.200 MHz to be located 5.5 miles ESE of Lawrenceburg, Tennessee.

22382-CD-AL-(2)-76, Harding Motor Company d.b.a. Pierre Radio Paging. Consent to Assignment of License from Pierre Radio Paging, Assignor to Pierre Radio Paging and Telephone Corporation, Inc., Assignee. Stations: KTS221 & KWT855, Pierre, South Dakota.

22383-CD-MP-76, William B. Folsom d.b.a. Cullman Mobile Phone (KWU213) C.P. to change frequency from 454.175 MHz to 152.12 MHz located 1.5 miles NNE of City Hall, Cullman, Alabama.

22384-CD-P-76, Southern Communications Co., Inc. d.b.a. Mobilfone of Tyler (KLB493) C.P. for additional facilities to operate on 454.025 MHz located on Glasgow Rd., 2.5 miles East of Tyler, Texas.

22385-CD-AP-76, AAA Anserphone, Inc.—Jackson and Frank L. Yates, a joint venture. Consent to assignment of Permit from AAA Anserphone, Inc.—Jackson and Frank L. Yates, Assignors to AAA Anserphone, Inc.—Jackson, Assignee. Station: KUS225, Jackson, Mississippi (AIR-GROUND).

22386-CD-P-76, Miami Valley Radiotelephone (KLF577), C.P. for additional facilities to operate on 35.22 MHz to be located at a new site described as Loc. #9: 7 miles S/N of Jamestown, Ohio on Bono Rd., near Jamestown, Ohio.

22387-CD-P/ML-(2)-76, Southwestern Bell Telephone Company (KKJ446), C.P. for additional facilities to operate on 152.72 MHz, base located 6.1 mile ENE of Midland, Texas; and to add test frequency 157.98 MHz located at 410 West Missouri Street, Midland, Texas.

22388-CD-P-76, Anser-Quik Enterprises, Inc. (New), C.P. for a new 1-way station to operate on 152.24 MHz to be located at Sea Level Hospital, U.S. Route 70, Sea Level, North Carolina.

POINT TO POINT MICROWAVE RADIO SERVICE

4311-CF-P-76, Midwestern Relay Co. (WLJ 51), 3.0 miles SE of DePere, Wisconsin. (Lat. 44°24'30" N., Long. 87°59'57" W.): Construction permit to change frequency (6093.5H MHz) to 5974.8H MHz toward Stockbridge and 6093.5V MHz toward

Oconto Falls, Wisconsin, on azimuth 209.1° and 341.5°, respectively.

4318–CF–P–76, Eastern Microwave, Inc. (New), 2.36 miles SE of Inter. Rtes. 120 and 220. Lock Haven, Pa. (Lat. 41°07'12" N., Long. 77°24'12" W.): Construction permit to add 10815.0V MHz toward St. College, Pennsylvania on azimuth 226.1°.

4379–CF–P–76, Eastern Microwave, Inc. (KFN 21), New York, New York. (Lat. 40°46'09" N., Long. 73°58'55" W.): Construction permit to add 6241.7H, 6301.0H, 6330.7V, and 6390.0V MHz toward East Meadow, New York, on azimuth 97.5°.

4444–CF–P–76, Eastern Microwave, Inc. (KEA 66), Fine, New York. (Lat. 44°13'20" N., Long. 75°07'35" W.): Construction permit to add 6182.4V MHz toward Watertown and Gouverneur, New York, on azimuth 242.8° and 295.2°, respectively.

4445–CF–P–76, Eastern Microwave, Inc. (KPP 81), 1 mile WNW of Gouverneur, New York. Lat. 44°20'38" N., Long. 75°29'19" W.): Construction permit to add 5960.0H MHz toward Potsdam, New York, on azimuth 47.7°.

4446–CF–P–76, Eastern Microwave, Inc. (KPP 82), 2 miles SW of Potsdam, New York. (Lat. 44°38'54" N., Long. 75°01'07" W.): Construction permit to add 6241.7V MHz toward Massena and Malone, both in New York, on azimuth 15.0° and 69.7°, respectively.

4447–CF–P–76 Eastern Microwave, Inc. (KTG 28), 3.5 miles E. of Frewsburg, New York. (Lat. 42°02'48" N., Long. 79°05'26" W.): Construction permit to add 6212.0H, 6271.4H, 6330.7H, and 6390.0H MHz toward Fredonia, New York, on azimuth 326.8°.

4391–CF–P–76, American Satellite Corporation (WBA 718), Vallejo, California. (Lat. 88°06'33" N., Long. 122°10'57" W.): Construction permit to add 10975.0H MHz and 11135.0H MHz toward Orinda Village (WBA 784), California, via passive repeater near Vallejo, on azimuths 209.9° and 189.6°, respectively.

4392–CF–P–76, American Satellite Corporation (WBA 784), Orinda Village, California. (Lat. 37°52'56" N., Long. 122°13'56" W.): Construction permit (a) to add 11425.0H MHz and 11505.0H MHz toward Vallejo (WBA 718), California, via passive repeater near Vallejo, on azimuths 9.5° and 29.9°, respectively, and (b) to add 11345.0H MHz and 11665.0H MHz toward San Francisco, California, on azimuth 235.9°.

4393–CF–P–76, American Satellite Corporation (WBA 786), San Francisco, California. (Lat. 37°47'39" N., Long. 122°23'46" W.): Construction permit to add 10775.0H MHz and 11095.0H MHz toward Orinda Village (WBA 784), California, on azimuth 55.8°.

4429–CF–P–76, Southern Pacific Communications Company (New), 2647 University Blvd., Wheaton, Maryland. Lat. 39°02'26" N., Long. 77°03'18" W. C.P. for a new station on 5974.8V towards Cooksville, Maryland on azimuth 4.7° and 6093.5H towards Bull Run, Virginia on azimuth 254.3°.

4430–CF–P–76, Same (New), Ridge Road, Bull Run Mountain, Virginia. Lat. 38°54'10" N., Long. 77°40'29" W. C.P. for a new station on 6256.5H towards Wheaton, Maryland on azimuth 73.9 degrees and 6226.9H towards Morrisville, Virginia on azimuth 177.3°.

4431–CF–P–76, Same (New), 5 miles North of Stockbridge, Georgia. Lat. 33°37'01" N., Long. 84°14'16" W. C.P. for a new station on 6034.2V towards Walnut Grove, Georgia on azimuth 71.1 degrees and 10775.0V towards Atlanta, Georgia on azimuth 317.3°.

4432–CF–P–76, Same (WAU252) 0.3 miles SW of Cooksville, Maryland. Lat. 39°19'06" N., Long. 77°01'33" W. Mod. C.P. to add 6197.2V towards Wheaton, Maryland on azimuth 184.7°.

4404–CF–P–76, United States Transmission Systems, Inc. (KFA80) Gilles, Louisiana. C.P. to change 5945.2V to 6197.2V towards Kinder, Louisiana and 6226.9H to 6197.2H towards Starks, Louisiana.

4433–CF–P–76, The Pacific Telephone and Telegraph Company (KMJ95), 1407 J Street, Sacramento, California. Lat. 38°34' 45" N., Long. 121°29'10" W. C.P. to add a point of communication on frequencies 10895V 11655V MHz toward Ben Bolt, California on azimuth 88.5°.

4434–CF–P–76, Same, (KNM28), Ben Bolt, 3 miles NW of Latrobe, California. Lat. 38° 35'17" N., Long. 121°01'26" W. C.P. to increase antenna structure height; add a point of communication on frequencies 11305V 11465V MHz toward Sacramento, California on azimuth 268.7°; add 11305H 11465H MHz toward Union Hill, California on azimuth 65.3°.

4435–CF–P–76, Same, (KNM29), Union Hill, 1.7 miles East of Pollock Pines, California. Lat. 38°45'24" N., Long. 120°33'13" W. C.P. to add frequencies 10895H 11055H MHz toward Ben Bolt, California on azimuth 245.6°, and 11055V 11135V MHz toward Echo Summit, California on azimuth 83.2°.

4436–CF–P–76, Same, (KNM30), Echo Summit, 4.5 miles SSW of Meyers, California. Lat. 38°48'11" N., Long. 120°02'40" W. C.P. to increase antenna structure height; replace antenna on frequency 11405V MHz toward South Lake Tahoe, California; add frequencies 11245V 11245H 11485V 11485H MHz toward South Lake Tahoe, California on azimuth 20.9°; 11305V 11465V MHz toward Tahoe City Passive Reflector on azimuth 347.3° and from Passive Reflector toward Tahoe City, California on azimuth 49.4°; add 11465V 11545V MHz toward Union Hill, California on azimuth 263.5.

4437–CF–P–76, Same, (KNM31), 2633 Sussex Street, South Lake Tahoe, California, Lat. 38°55'41" N., Long. 119°59'00" W. C.P. to replace antenna for frequency 10715H MHz toward Echo Summit; add 10795V 10795H 11035V 11035H MHz toward Echo Summit, California on azimuth 200.9°.

4438–CF–P–76, Same, (New), 298 Grove Street, Tahoe City, California. Lat. 39°10' 24"N., Long. 120°08'22" W. C.P. for a new station on frequencies 10895V 11055V MHz toward Tahoe City Passive Reflector on azimuth 232.1° and from Passive Reflector toward Echo Summit, California on azimuth 167.2°.

4439–CF–P–76, United Telephone Company of the West, (New) Main Street, between Parker and Church Streets, Lewellen, Nebraska. Lat. 41°19'51" N., Long. 102°03' 40" W. C.P. for a new station on frequency 2168.4V MHz toward Oshkosh, Nebraska on azimuth 296.1°.

4440–CF–P–76, Same, (KZI64), 156 West "C" Street, Oshkosh, Nebraska. Lat. 41°24'16" N., Long. 102°20'41" W. C.P. to correct coordinates; change frequency 2121.8V to 2112.0V MHz toward Lisco, Nebraska on azimuth 294.9°; replace transmitter and antenna; add 2118.4V MHz toward Lewellen, Nebraska on azimuth 115.9°.

4441–CF–P–76, Same, (KZI63), West end of Lot 6, Block 1, Lisco, Nebrasko. Lat. 41° 30'00" N., Long. 102°37'10" W. C.P. to change frequencies 2175.4H to 2178.0H MHz toward Broadwater, Nebraska on azimuth 299.2°; and 2171.8V to 2162.0V MHz toward Oshkosh, Nebraska on azimuth 114.7°; replace transmitters.

4442–CF–P–76, United Telephone Company of the West, (KZI62), Smith and Star Streets, Broadwater, Nebraska. Lat. 41°35'49" N., Long. 102°51'05" W. C.P. to change frequencies 2129.0V to 2124.4V MHz toward Northport, Nebraska on azimuth 297.3°, and 2125.4H to 2128.0H MHz toward Lisco, Nebraska on azimuth 119.0°; replace transmitters.

4443–CF–P–76, Same, (KBA30), 0.5 miles East of Northport, Nebraska. Lat. 41°41'01" N., Long. 103°04'33" W. C.P. to change frequency 2179.0V to 2174.4V MHz toward Broadwater, Nebraska on azimuth 117.2°; replace transmitters.

CORRECTIONS

4071–CF–P–76, Addison Home Telephone Company, (New), 0.9 mile NNE of Troupsburg, New York. Correct frequency 2115.6H to read 2115.2H MHz toward Whitesville, New York. All other particulars remain as reported on Public Notice #812, dated June 28, 1976.

POINT TO POINT MICROWAVE RADIO SERVICE (MAJOR AMENDMENTS)

5571–Cl–P–73, Southern Pacific Communications Company, (New), Amend C.P. to change location to Morrisville, County Rd. 637, Midland, Virginia. Lat. 38°31'52" N., Long. 77°39'13" W.; change 6004.2H to 5974.8V MHz towards Chancellor, Va. on azimuth 169.8°; change 6034.2V to 5974.8V MHz toward a new pt. of communication at Bull Run, Va. on azimuth 357.3°.

5570–Cl–P–73, Same, (New), Chancellor, Virginia. Amend C.P. to change 6197.2H to 6226.9V MHz towards Pendleton, Va. on azimuth 225.6°; chg. polarity of 6226.9 to Horizontal for new pt. of communication at Morrisville, Va. on azimuth 349.9°.

5569–Cl–P–73, Same, (New), Pendleton, Virginia. Amend C.P. to chg. coordinates to Lat. 37°59'28" N., Long. 77°58'21" W.; chg. 5945.2H to 5974.8V MHz towards Chancellor, Va. on azimuth 45.3°.

5566–Cl–P–73, Same, (New), Jetersville, Virginia. Amend C.P. to chg. 5945.2H to 6123.1V MHz towards Cullen, Va. on azimuth 250°.

5565–Cl–P–73, Same, (New), Cullen, Virginia. Amend C.P. to chg. 6226.9H to 6197.2H MHz towards Barnesville, Va. on azimuth 183°; chg. 6226.9V to 6404.8V MHz towards Jetersville, Va. on azimuth 41.6°.

5563–Cl–P–73, Same, (New), Oak Hill, North Carolina. Amend C.P. to chg. coordinates to Lat. 36°25'22" N., Long. 78°47'50" W.; chg. 6256.5H to 6197.2H MHz toward McDade, N.C. on azimuth 29.3°.

5562–Cl–P–73, Same, (New), McDade, North Carolina. Amend C.P. to chg. 5974.8V to 5945.2H MHz toward Gibsonville, N.C. on azimuth 52.7°; chg. 5945.2V to 5974.8H MHz towards Oak Hill, N.C. on azimuth 253.9°.

5560–Cl–P–73, Same, (New), Gibsonville, North Carolina. Amend C.P. to chg. 6197.2V to 6226.9H MHz towards McDade, N.C. on azimuth 73.7°; chg. polarity of 6197.2 to Horizontal towards, High Point, N.C. on azimuth 237.1°.

5559–Cl–P–73, Same, (New), High Point, North Carolina. Amend C.P. to chg. 6034.2V to 5974.8H MHz towards Tyro, N.C. on azimuth 252.8°; chg. 6123.1H to 5945.2V MHz toward Gibsonville, N.C. on azimuth 56.9°.

5557–Cl–P–73, Same, (New), Rimer, North Carolina. Amend C.P. to chg. 5945.2H to 5974.8V MHz towards Tyro, N.C. on azimuth 16.5°; chg. 6004.5V to 5974.8V MHz towards Stallings, N.C. on azimuth 199.8°.

5556–Cl–P–73, Same, (New), Amend C.P. to chg. location to Stallings, County Rd. 3448, Matthews, North Carolina. Lat. 35°05'03" N., Long. 80°42'40" W.; add 6197.2V MHz towards a new pt. of communications at York, N.C. on azimuth 261.7°.

6086–Cl–P–73, Southern Pacific Communications Company, (New), York, North Carolina. Amend C.P. to chg. 3930H to 6226.9V MHz towards Chester, S.C. on azimuth 162.3°; chg. 4110V to 5974.8V MHz towards a new pt. of communication at Stallings, N.C. on azimuth 81.4°.

6087–C1–P–73, Same, (New), Chester, South Carolina. Amend C.P. to chg. coordinates to Lat. 34°36'01" N., Long. 81°09'18" W.; chg. 4070V to 5945.2H MHz towards York, S.C. on azimuth 2.3°; chg. 3910H to 5974.8V MHz towards Simpson, S.C. on azimuth 160.6°.

6088–C1–P–73, Same, (New), Simpson, South Carolina. Amend C.P. to chg. 4090V to 6226.9H MHz towards Chester, S.C. on azimuth 340.7° and chg. 3930H to 6256.5H MHz towards Gilbert, S.C. on azimuth 209.4°.

6089–C1–P–73, Same, (New), Gilbert, South Carolina. Amend C.P. to chg. 4070H to 6004.5V MHz towards Simpson, S.C. on azimuth 29.2°; chg. 3910H to 5974.8V MHz towards Kitchings, S.C. on azimuth 205.6°.

6091–C1–P–73, Same, (New), Kitchings, South Carolina. Amend C.P. to chg. 4090H to 6226.9H MHz towards Gilbert, S.C. on azimuth 25.6° and chg. 3930V to 6197.2V MHz towards Bath, S.C. on azimuth 247.8°.

6097–C1–P–73, Same, (New), Pine Log Rd., Bath, South Carolina. Amend C.P. to chg. coordinates to Lat. 33°28'45" N., Long. 81°50'35" W.; chg. 4070H to 5945.2H MHz towards Kitchings, S.C. on azimuth 67.6°; chg. 3910V to 5974.8V MHz towards a new pt. of communications at Harlem, Ga. on azimuth 258.3°.

6106–C1–P–73, Same, (New), Ficklin, Georgia. Amend C.P. to chg. 5945.2V to 5974.8V MHz towards Stephens, Ga. on azimuth 129.2°.

6100–C1–P–73, Same, (New), Harlem, Georgia. Amend C.P. to chg. 6375.2H to 6197.2H MHz towards Ficklin, Ga. on azimuth 309° and chg. 6197.2V to 6197.2H MHz towards a new pt. of communications at Bath, S.C. on azimuth 78°.

6102–C1–P–73, Same, (New), Stephens, Georgia. Amend C.P. to chg. coordinates to Lat. 33°47'24" N., Long. 83°06'26" W.; chg. 6375.2V to 6226.9H MHz towards Eastville, Ga. on azimuth 279.4°; chg. 6375.2H to 6226.9V MHz towards Ficklin, Ga. on azimuth 112°.

6103–C1–P–73, Same, (New), Eastville, Georgia. Amend C.P. to chg. coordinates to Lat. 33°51'00" N., Long. 83°32'47" W.; chg. 5945.2V to 5945.2H MHz towards a new pt. of communication at Walnut Grove, Ga. on azimuth 244.5°; chg. 5974.8H to 5945.2V MHz towards Stephens, Ga. on azimuth 99.2°.

6104–C1–P–73, Southern Pacific Communications Company, (New), Amend C.P. to chg. station location to 1.5 miles S of Walnut Grove, Georgia. Lat. 33°43'30" N., Long. 83°51'31" W.; chg. 6375.2V to 6256.5V MHz towards a new pt. of communication at Stockbridge, Ga. on azimuth 251.3°; chg. 6375.2H to 6226.9H MHz towards Eastville, Ga. on azimuth 64.3°.

6105–C1–P–73, Same, (New), Amend C.P. to chg. location to 101 Marietta Plaza, Atlanta, Georgia. Lat. 33°45'24" N., Long. 84°23'32" W.; chg. 5945.2V to 11665V MHz towards a new pt. of communication at Stockbridge, Ga.

[FR Doc.76–20734 Filed 7–16–76;8:45 am]

[Docket No. 20654]

INTERFERENCE FROM SPARK-TYPE IGNITION SYSTEMS IN MOTOR VEHICLES

Extending Time To File Comments and Reply Comments

1. The Electronics Industries Association's (EIA) Land Mobile Communications Section has requested a second extension of time within which Comments and Reply Comments in the above captioned proceeding might be filed.

2. Because of the importance of this proceeding to both manufacturers and consumers; and because of the Commission's desire to have the most definitive responses possible, an extension of time to December 18, 1976 for the filing of Comments and February 1, 1977 for the filing of Reply Comments *is ordered*, Pursuant to § 0.241(d) of the Commission's rules.

Adopted: July 6, 1976.
Released: July 8, 1976.

RAYMOND E. SPENCER,
Chief Engineer.

[FR Doc.76–20732 Filed 7–16–76;8:45 am]

[Docket Nos. 20856–20858; File Nos. 923–C2–P–70, 2280–C2–P–70, 2358–C2–P–70]

TRA-MAR COMMUNICATIONS, INC., ET AL.

Construction Permits for Facilities in the Domestic Public Land Mobile Radio Services To Operate in the New York City-Newark and Patterson, New Jersey Areas

By the Commission: 1. The Commission, has for consideration the applications filed by Tra-Mar Communications, Inc. (Tra-Mar) on August 21, 1969: Mobile Radio Message Service, Inc. (Mobile) on October 28, 1969; and Telephone Secretarial Service (TSS) on October 29, 1969, for additinoal two-way facilities to be operated in the Domestic Public Land Mobile Radio Service (DPLMRS) in the New York City metropolitan area. All three applications are for UHF frequency 454.125 MHz.

2. The applicants appear to be legally, technically and financially qualified to operate the facilities requested. However, since Tra-Mar, Mobile and TSS propose to use the same frequency in the same general area, they are electrically mutually exclusive and a comparative hearing must be held to determine which applicant is better qualified to operate the proposed facilities in the public interest Ashbacker Radio Corp. v. F.C.C. 326 U.S. 327 (1945).

3. Charles E. Sackermann, President, 100% stockholder of Tra-Mar, was indicted and arraigned on August 23, 1974, in the United States District Court of New Jersey (Case No. 74–313), for violations of Title 18 of the United States Code Sections 371, 1503 and 2512[1] which includes conspiracy, obstruction of justice and the sending of wire or oral communications intercepting devices. He was also indicted in the Superior Court of New Jersey for conspiracy to commit the crime of willfully possessing and distributing communication intercepting devices. He has entered a plea of not guilty to all of the above charges and voluntarily disclosed all of the above information to the Commission by an amendment to Tra-Mar's application dated October 24, 1974. Currently, there has been no resolution of the charges against Mr. Sackermann, and to delay the contemplated comparative hearing or the implementation of the proposed service pending that outcome would not be in the public interest. Further, we do not feel that additional issues inquiring into the alleged misconduct of Mr. Sackermann are appropriate with the Federal and State criminal actions pending. Chapman Radio and Television Co., 7 FCC 2d 461, 9 RR 2d 727 (1967).

4. Since Mr. Sackermann is the sole shareholder of Tra-Mar, if the presiding officer determines Tra-Mar to be preferred over the other applicants, the effectiveness of his initial decision shall be stayed pending notification by Tra-Mar of the results of those criminal proceedings. If Mr. Sackermann is acquitted, the presiding officer will remove the stay and his initial decision will become effective unless exceptions thereto are timely filed. If Mr. Sackermann is convicted, the presiding officer shall add such further issues and hold such further proceedings necessary to determine the effect of the conviction on the basic and comparative qualifications of this applicant. This procedure has been generally followed; see Grayson Television Co., Inc., FCC 67–1099, 34 F.R. 14,120 (1967). To withhold the decision, as we ordered in Grayson, would cause an undue delay and hardship on both the competing applicants and the presiding officer. Moreover, if the initial decision is withheld, valuable radio service to the public may be unduly delayed.

5. In view of the foregoing, *It is ordered*, That pursuant to sections 309(d) and (e) of the Communications Act of 1934 as amended, the captioned applications of Tra-Mar Communications, Inc., Mobile Radio Message Service, Inc., and Telephone Secretarial Service are designated for hearing in a consolidated proceeding upon the following issues:

1. To determine on a comparative basis the nature and extent of the services proposed by each applicant.

2. To determine the total area and population to be served by the applicants within the 39 dbu contour of their respective proposed stations based upon the standards set forth in Section 21.504 of the F.C.C. Rules and Regulations, and to determine the need for their proposed service in those areas.

3. To determine, in light of the evidence adduced pursuant to the foregoing issues, what disposition of the above-captioned applications would best serve the public interest, convenience and necessity.

6. *It is further ordered*, That in the event the presiding officer determines that Tra-Mar Communications, Inc., is the preferred applicant, he shall stay the effectiveness of the Initial Decision pending notification by Tra-Mar, in accordance with Section 1.65 of the Commission's rules of the final outcome of the pending criminal actions of the U.S. District Court of New Jersey (Case No. 74–313) and the Superior Court of New Jersey. If Mr. Sackermann is acquitted, the presiding officer will remove the stay

[1] Section 371, Conspiracy to commit offense or to defraud United States; Section 1503, Influencing of injuring officer, juror or witness generally; Section 2512, Manufacture, distribution, possession, and advertising of wire or oral communication intercepting devices prohibited.

and the Initial Decision will become effective. If Mr. Sackermann is convicted the presiding officer shall add such further issues and hold such further proceedings as may be necessary to determine the effect of the conviction on the basic and comparative qualifications of the applicant.

7. *It is further ordered,* That the hearing shall be held at the Commission offices in Washington, D.C. at a time and place, and before an Administrative Law Judge, to be specified in a subsequent order.

8. *It is further ordered,* That the Chief, Common Carrier Bureau is made a party to the proceeding.

9. *It is further ordered,* That applicants may avail themselves of an opportunity to be heard by filing with the Commission pursuant to § 1.221(c) of the rules, within twenty (20) days of the release date of this order, a written notice stating an intention to appear on the date set for the hearing and present evidence on the issues specified herein.

Adopted: June 29, 1976.

Released: July 9, 1976.

FEDERAL COMMUNICATIONS COMMISSION,
VINCENT J. MULLINS,
Secretary.

[FR Doc.76-20733 Filed 7-16-76;8:45 am]

FEDERAL ENERGY ADMINISTRATION

ENVIRONMENTAL ADVISORY COMMITTEE

Meeting

Pursuant to the provisions of the Federal Advisory Committee Act (Pub. L. 92-463, 86 Stat. 770), notice is hereby given that the Environmental Advisory Committee will meet Wednesday, August 4, 1976, at 9 a.m., Room 5041, 12th & Pennsylvania Avenue, NW., Washington, D.C.

The Committee was established to provide advice and information to FEA concerning environmental aspects of FEA policies and programs.

The agenda for the meeting is as follows:

1. Status Report on Analysis of EAC PIES Scenario.
2. Discussion of Administration Synfuels Policy; Questions and Answers with FEA Administrator.
3. Report and Recommendations from Energy Conservation Subcommittee.
4. Report and Recommendations from OCS/Energy Facility Siting Subcommittee.
5. Report and Recommendations from ad hoc Group on Regulations for Regions in Violation of Air Quality Standards.
6. Report and Recommendations from ad hoc Group on Nuclear Policy.
7. Report and Recommendations from Coal Utilization Subcommittee.

Subcommittees may meet informally in Washington, the preceding evening, at the discretion of the Subcommittee Chairmen; the meetings will be open to the public. For further information on subcommittee activities, call Lois Weeks, Director, Advisory Committee Management at (202) 961-7022.

The meeting is open to the public. The Chairman of the Committee is empowered to conduct the meeting in a fashion that will, in his judgment, facilitate the orderly conduct of business. Any member of the public who wishes to file a written statement with the Committee will be permitted to do so, either before or after the meeting. Members of the public who wish to make oral statements should inform the Director, Advisory Committee Management at least 5 days prior to the meeting and reasonable provision will be made for their appearance on the agenda.

Further information concerning this meeting may be obtained from the Advisory Committee Management Office.

Minutes of the meeting will be made available for public inspection at the Federal Energy Administration.

Issued at Washington, D.C. on July 13, 1976.

MICHAEL F. BUTLER,
General Counsel.

[FR Doc.76-20706 Filed 7-14-76;10:13 am]

FUEL RESOURCES DEVELOPMENT CO.

Consent Order

I. INTRODUCTION

Pursuant to 10 CFR 205.197(c), the Federal Energy Administration ("FEA") hereby gives notice of a Consent Order which was executed by Fuel Resources Development Company ("Fuelco") on July 6, 1976 and by the FEA on July 8, 1976. In accordance with that section, FEA will receive comments with respect to this Consent Order. Although this Consent Order has been signed and tentatively accepted by FEA, the FEA may, based upon comments received in response to this notice, withdraw its acceptance and, if appropriate, attempt to negotiate an alternative Consent Order.

II. THE CONSENT ORDER

Fuelco is a wholly-owned subsidiary of Public Service Company of Colorado ("PSCo"), formed principally for the purpose of exploring for and developing new sources of raw energy products, *i.e.*, natural gas and oil, for use by PSCo in satisfying the requirements of its gas and electric customers, and has been engaged in that business since its incorporation in 1970.

On October 23, 1973, PSCo, through Fuelco, entered into an agreement with Pacific Power and Light Company, Pasco, Inc., and Energetics, Inc., whereby, among other things, Fuelco and Pacific Power and Light Company agreed to purchase at the posted price the output of Pasco's refinery at Sinclair, Wyoming, and, in addition, to make certain payments to Energetics, Inc. for use in the exploration for and development of a future supply of crude oil to be refined at Pasco's Sinclair, Wyoming refinery. Products refined from such crude oil were to be first offered to Fuelco and Pacific Power and Light Company.

On October 24, 1973, PSCo and Fuelco entered into a contract ("Sales Agreement") whereby Fuelco agreed to sell to PSCo petroleum products acquired by it under the October 23, 1973 agreement. The price charged by Fuelco was to be the posted price paid by Fuelco for the product plus transportation charges, taxes and a fixed monthly charge to cover administration costs. An additional $.08 per gallon was also added, without explanation, by the terms of the sales agreement to the price to be paid by PSCo in purchases of petroleum product from Fuelco. (FEA has been advised by PSCo that the $.08 per gallon charge represented a mechanism whereby PSCo could transfer to Fuelco the amount which Fuelco was obligated to pay Energetics, Inc. in connection with the exploration programs, which obligation PSCo had guaranteed.)

Fuelco treated the entire price paid by PSCo for refined products pursuant to the Sale Agreement (including the $.08 exploration charge) as a cost of fuel in accounting for its revenues for the period October 13, 1973 through October 25, 1975. The $.08 per gallon amount was not always separately invoiced as an exploration charge. During this period, Fuelco sold middle distillates, gasoline, and residual fuel oil to PSCo.

FEA price regulations establish a maximum lawful price for resale of refined petroleum products. During the period October 13, 1973 through October 20, 1975, gasoline, middle distillates and residual fuel oil were products whose prices were the subject of control by these regulations. These regulations permit the passthrough by a reseller of the costs of obtaining and making such product, but do not permit exploration and development costs to be considered as product costs for the purposes of a reseller's selling price. While there is nothing improper in Fuelco's separate billing of such exploration and development charges, FEA's investigation into the price charged for products sold by Fuelco to PSCo resulted in FEA's preliminary determination that those prices were in excess of those permitted by FEA regulations.

Under the terms of the Consent Order, Fuelco does not concede that it is either subject to the FEA price rules or that its prices charged to PSCo are in violation of those rules. However, on November 18, 1975 Fuelco voluntarily issued a credit memorandum to PSCo for $6,722,151.13 representing the amount charged to PSCo as fuel costs in excess of that permitted by FEA regulations. (A separate billing was made by Fuelco to PSCo for exploration costs in the same amount.)

The Consent Order reflects Fuelco's agreement to maintain separate invoices for its sale of fuel and statements for payment by PSCo of exploration costs or any other costs which cannot be passed through by Fuelco to PSCo as an incurred product cost or non-product cost pursuant to 10 C.F.R. Part 212, Subpart

F, and FEA's agreement that it will deem Fuelco's November 18, 1975 credit memorandum as a full and complete remedy of the alleged violation described above.

III. SUBMISSION OF WRITTEN COMMENTS

Interested persons are invited to comment on this Consent Order by submitting such comments in writing to: Dudley E. Favor, Regional Administrator, P.O. Box 26247—Belmar Branch, 1075 So. Yukon Street, Lakewood, Colorado 80226. Copies of this Consent Order may be received free of charge by written or oral request to the same address (telephone (303) 234-2420) or Norma White, Room 5308, 2000 M Street, NW., Washington, D.C. 20461 (telephone (202) 254-8700).

Comments should be identified on the outside of the envelope and on documents submitted with the designation "Comments on Fuelco Consent Order." All comments received by 4:30 p.m. e.d.t. on the 30th calendar day following publication of this notice will be considered by the FEA in evaluating the Consent Order.

Any information or data which, in the opinion of the person furnishing it, is confidential, must be identified as such and submitted in accordance with the procedures outlined in 10 CFR 205.9(f).

Issued in Washington, D.C., July 14, 1976.

MICHAEL F. BUTLER,
General Counsel.

[FR Doc.76-20839 Filed 7-14-76;8:45 am]

FEDERAL MARITIME COMMISSION

GERMANY-NORTH ATLANTIC PORTS RATE AGREEMENT

Agreement Filed

Notice is hereby given that the following agreement has been filed with the Commission for approval pursuant to section 15 of the Shipping Act, 1916, as amended (39 Stat. 733, 75 Stat. 763, 46 U.S.C. 814).

Interested parties may inspect and obtain a copy of the agreement at the Washington office of the Federal Maritime Commission, 1100 L Street, NW., Room 10126; or may inspect the agreement at the Field Offices located at New York, N.Y., New Orleans, Louisiana, San Francisco, California and Old San Juan, Puerto Rico. Comments on such agreements, including requests for hearing, may be submitted to the Secretary, Federal Maritime Commission, Washington, D.C. 20573, on or before August 9, 1976. Any person desiring a hearing on the proposed agreement shall provide a clear and concise statement of the matters upon which they desire to adduce evidence. An allegation of discrimination or unfairness shall be accompanied by a statement describing the discrimination or unfairness with particularity. If a violation of the Act or detriment to the commerce of the United States is alleged, the statement shall set forth with particularity the acts and circumstances said to constitute such violation or detriment to commerce.

A copy of any such statement should also be forwarded to the party filing the agreement (as indicated hereinafter) and the statement should indicate that this has been done.

Notice of Agreement Filed by:

Howard A. Levy, Esquire, Suite 727, 17 Battery Place, New York, New York 10004.

Agreement No. 9427-4, among the members of the above-named rate agreement, provides that the agreement shall now cover the movement of cargo from interior European points when moving via German, Belgian or Dutch ports and to interior U.S. points when moving via U.S. North Atlantic ports, and shall extend to all intermodal shipments, moving under a through bill of lading or otherwise, and shall cover matters relating to shoreside handling, services and charges in connection therewith and allows the rate agreement to consult, cooperate and agree with other ratemaking bodies serving the same European ports as to the establishment, policing and enforcement of rules, practices and charges relating to the movement of containers outside the above-mentioned European port areas.

By order of the Federal Maritime Commission.

Dated: July 14, 1976.

FRANCIS C. HURNEY,
Secretary.

[FR Doc.76-20801 Filed 7-16-76;8:45 am]

STEAMSHIP OPERATORS INTERMODAL COMMITTEE

Agreement Filed

Notice is hereby given that the following agreement has been filed with the Commission for approval pursuant to section 15 of the Shipping Act, 1916, as amended (39 Stat. 733, 75 Stat. 763, 46 U.S.C. 814).

Interested parties may inspect and obtain a copy of the agreement at the Washington office of the Federal Maritime Commission, 1100 L Street, NW., Room 10126; or may inspect the agreement at the Field Offices located at New York, N.Y., New Orleans, Louisiana, San Francisco, California and Old San Juan, Puerto Rico. Comments on such agreements, including requests for hearing, may be submitted to the Secretary, Federal Maritime Commission, Washington, D.C. 20573, within on or before August 9, 1976. Any person desiring a hearing on the proposed agreement shall provide a clear and consise statement of the matters upon which they desire to adduce evidence. An allegation of discrimination or unfairness shall be accompanied by a statement describing the discrimination or unfairness with particularity. If a violation of the Act or detriment to the commerce of the United States is alleged, the statement shall set forth with particularity the acts and circumstances said to constitute such violation or detriment to commerce.

A copy of any such statement should also be forwarded to the party filing the agreement (as indicated hereinafter) and the statement should indicate that this has been done.

Notice of Agreement Filed by:

John K. Cunningham, Executive Secretary, Steamship Operators Intermodal Committee, 67 Broad Street, New York, New York 10004.

Agreement No. 9735-9 is an application on behalf of the member lines of the Steamship Operators Intermodal Committee to indefinitely extend the terms and conditions of the presently approved agreement beyond the present termination date of August 29, 1976. In particular, Article 11 thereof is being amended to so provide.

By order of the Federal Maritime Commission.

Dated: July 14, 1976.

FRANCIS C. HURNEY,
Secretary.

[FR Doc.76-20801 Filed 7-16-76;8:45 am]

FEDERAL POWER COMMISSION

[Docket No. RP72-110 (PGA76-10)]

ALGONQUIN GAS TRANSMISSION CO.

Rate Change Pursuant to Purchased Gas Cost Adjustment Provision

JULY 12, 1976.

Take notice that Algonquin Gas Transmission Company ("Algonquin Gas") on June 30, 1976, tendered for filing Eighteenth Revised Sheet No. 10 to its FPC Gas Tariff, First Revised Volume No. 1.

This sheet is being filed pursuant to Algonquin Gas' Purchased Gas Cost Adjustment Provision set forth in section 17 of the General Terms and Conditions of its FPC Gas Tariff, First Revised Volume No. 1. The rate change is being filed to reflect a change in purchased gas costs to be paid by Algonquin Gas to its supplier, Texas Eastern Transmission Corporation on August 1, 1976.

The proposed effective date of the tariff sheet is August 1, 1976.

Any person desiring to be heard or to protest said filing should file a petition to intervene or protest with the Federal Power Commission, 825 North Capitol Street, NE, Washington, DC 20426, in accordance with §§ 1.8 and 1.10 of the Commission's rules of practice and procedure (18 CFR 1.8, 1.10). All such petitions or protests should be filed on or before July 27, 1976. Protests will be considered by the Commission in determining the appropriate action to be taken, but will not serve to make protestants parties to the proceeding. Any person wishing to become a party must file a petition to intervene. Copies of this filing are on file with the Commission and are available for public inspection.

KENNETH F. PLUMB,
Secretary.

[FR Doc.76-20782 Filed 7-16-76;8:45 am]

[Docket No. E-9408]

AMERICAN ELECTRIC POWER SERVICE CORP.

Order Granting Late Intervention

JULY 12, 1976.

By order issued May 30, 1975, the Commission accepted for filing and suspended the effectiveness of a proposed amendment to the July 6, 1951 Interconnection Agreement among Appalachian Power Company, Kentucky Power Company, Indiana and Michigan Electric Company, Ohio Power Company and American Electric Power Service Corporation, their agent. The Commission further set the matter for hearing.

On April 30, 1976, a Notice of Intervention was filed on behalf of the Office of the Public Service Commission of West Virginia. Good cause being shown, the Commission shall grant the Public Service Commission's notice of late intervention.

The Commission finds: It is desirable and in the public interest to allow the above-named petitioner to intervene.

The Commission orders: (A) The above-named petitioner is hereby permitted to intervene in these proceedings subject to the rules and regulations of the Commission; *Provided, however,* That participation of such intervenor shall be limited to matters affecting asserted rights and interests as specifically set forth in the petition to intervene; and *Provided, further,* That the admission of such intervenor shall not be construed as recognition by the Commission that it might be aggrieved because of any order or orders of the Commission entered in this proceeding.

(B) The intervention granted herein shall not be the basis for delaying or deferring any procedural schedules heretofore established for the orderly and expeditious disposition of this proceeding.

(C) The Secretary shall cause prompt publication of this order to be made in the FEDERAL REGISTER.

By the Commission.

KENNETH F. PLUMB,
Secretary.

[FR Doc.76-20753 Filed 7-16-76;8:45 am]

[Docket No. ER76-110]

ARKANSAS POWER AND LIGHT CO.

Settlement Conference

JULY 9, 1976.

Take notice that on July 22, 1976, a conference of all parties to this proceeding and Commission staff will be held in Room No. 6200 at the offices of the Federal Power Commission, 825 North Capitol Street NE., Washington, D.C., at 10 a.m.

Customers and other interested persons will be permitted to attend, but if such persons have not previously been permitted to intervene by order of the Commission, attendance at the conference will not be deemed to authorize intervention as a party in the proceeding.

All parties will be expected to come fully prepared to discuss the merits of all issues concerning the lawfulness of the proposed rate increase, and any procedural matters preparatory to a full evidentiary hearing or to make commitments with respect to such issues and any offers of settlement or stipulations discussed at the conference.

Letters concerning this conference are being mailed this date to all parties to the proceeding, all of the jurisdictional customers, and all affected state commissions.

KENNETH F. PLUMB,
Secretary.

[FR Doc.76-20758 Filed 7-16-76;8:45 am]

[Docket No. RI66-211]

ASHLAND OIL, INC.

Motion for Order To Discharge Refund Obligation

JULY 13, 1976.

Take notice that on June 25, 1976, Ashland Oil, Inc., (Ashland) P.O. Box 1503, Houston, Texas 77001, filed a motion for issuance of an order to discharge Ashland's refund obligation in Docket No. RI66-211, pursuant to § 1.12 of the Commission's rules of practice. As of February 1, 1976, the refundable amount by Ashland aggregated $638,342.50, inclusive of interest, and is being held by Ashland pending further order of the Commission pursuant to (Ordering) Paragraph (D) of Order No. 411, Docket No. R-371 issued October 2, 1970, as amended by Order Nos. 411-A and 411-B.

By supplemental agreement dated April 28, 1976 to Gas Purchase Contract No. 1225 between Ashland Oil and Consolidated Gas Supply Corporation, Ashland agrees to drill ten (10) new gas wells including well completions and installation of gathering facilities relating to leases in Logan, McDowell and Wyoming Counties, West Virginia and Buchanan County, Virginia which properties are dedicated under the existing Gas Purchase Contract. Estimated drilling costs per will range from $106,590 to $122,610. Ashland would expend fifty percent (50%) of such drilling costs from its own funds and fifty percent (50%) from monies subject to the refund obligation but in the aggregate not in excess of $1,-276,685, upon the Commission's issuance of an order approving the discharge of Ashland's refund obligation imposed in Order No. 411. Ashland agrees to expend, both the refund obligation and matching funds as expeditiously as possible but within five (5) years of the date of a Commission order approving the supplemental contract.

Any person desiring to be heard or to make any protest with reference to said motion should on or before July 28, 1976, file with the Federal Power Commission, Washington, D.C. 20426, a petition to intervene, a protest or an answer in accordance with the requirements of the Commission's rules of practice and procedure (18 CFR 1.8, 1.10 or 1.12). All protests filed with the Commission will be considered by it in determining the appropriate action to be taken but will not serve to make the protestants parties to the proceeding. Any party wishing to become a party to a proceeding, or to participate as a party in any hearing therein, must file a petition to intervene in accordance with the Commission's rules.

KENNETH F. PLUMB,
Secretary.

[FR Doc.76-20780 Filed 7-16-76;8:45 am]

[Docket No. E-8834, (Phase I)]

CAROLINA POWER & LIGHT CO.

Order Granting Motion and Establishing Procedures

JULY 12, 1976.

On June 11, 1976, the ElectriCities of North Carolina, the Cities of Camden and Bennettsville, South Carolina, the North Carolina Electric Membership Corporation and Four County Membership Corporation (Intervenors) collectively filed a Motion to Lodge Decision and Reopen Proceedings. This Motion is based upon the opinion of the Supreme Court in *F.P.C.* v. *Conway Corporation,* No. 75-342, decided June 7, 1976, and requests that the scope of Phase I of the above-captioned proceeding be enlarged to include the intervenors' evidence on the "price squeeze" issue and that the Presiding Judge's determination excluding this evidence be reversed. For the reasons stated, the Commission will grant Intervenors' Motion and order the Presiding Judge to establish further procedural dates.

The Commission, by order issued August 26, 1974, excluded anticompetitive matters from Phase I of this proceeding. An Application for Rehearing of this order was denied by order dated October 21, 1974 in which the Commission reiterated that the price squeeze issue was excluded from this hearing. The Presiding Judge granted a motion by Carolina Power & Light Company (CP&L) to strike Intervenors' evidence on this issue on the basis that the Commission's orders require such a ruling. Appeal from this ruling was denied by Commission order dated June 4, 1975. Intervenors' Motion requests that the Phase I hearing be enlarged to include evidence previously excluded, on the price squeeze issue.

CP&L filed a Response in Opposition to Motion to Lodge Decision and Reopen on June 23, 1976. In its Response CP&L argues that Phase II in the referenced proceeding was established to deal with alleged anti-competitive provisions of the CP&L proposed tariff. The Phase II proceeding is still in the discovery stage. CP&L argues that the *Conway* case, *supra,* deals "only with statutory jurisdiction and not with the exercise of FPC discretion necessary to carry out its jurisdictional mandate in a practical and reasoned manner." CP&L submits that "no reason exists not to use Phase II, instead of reopening Phase I, as the means" for introducing price squeeze evidence.

The Commission does not believe that, as a practical matter, CP&L's request is

the most expeditious manner of resolving the issue. The price squeeze allegations of Intervenors have an effect on the rates being charged under the proposed tariff. If this issue was continued in Phase II, any resulting decision would have to be related to the rates allowed to be charged under CP&L's tariff. The Commission believes that by reopening the record in Phase I to allow this evidence, the proper rates can be determined on the basis of a complete record rather than subject to further reopening and determination at the close of Phase II. Accordingly, the Commission believes that CP&L's Response should be denied.

The Supreme Court in *Conway, supra,* held that the Commission has the jurisdiction to consider allegations that proposed wholesale rates are discriminatory and noncompetitive when considered in relation to the retail rates. This is known commonly as the "price squeeze" issue. In view of the *Conway* decision, the Commission believes it is proper to reopen the record in Phase I of this proceeding to allow admission of Intervenors' evidence on this issue. Accordingly, the Presiding Judge will be ordered to convene a conference to establish such further procedural dates as necessary.

The Commission finds: Good cause exists to grant the Intervenors' Motion and to reopen the record.

The Commission orders: (A) The Intervenors' Motion is hereby granted.

(B) The Presiding Judge shall, on July 28, 1976, the date already set for a conference in this proceeding, establish procedural dates for the admission of the parties' evidence on the "price squeeze" issue and to allow for hearing and further procedures as may be appropriate and necessary.

(C) The Secretary shall cause prompt publication of this order to be made in the FEDERAL REGISTER.

By the Commission.

[SEAL] KENNETH F. PLUMB, *Secretary.*

[FR Doc.76-20783 Filed 7-16-76;8:45 am]

[Docket No. ER76-770]

CENTRAL MAINE POWER CO.

Initial Filing

JULY 13, 1976.

Take notice that Central Maine Power Company (CMP) on July 1, 1976 tendered for filing as an initial rate schedule an agreement for the sale and purchase of 15,000 kilowatts of capacity and related energy by CMP to Public Service Company of New Hampshire (PSNH). Said sale was for the period May 1, 1976 to and including May 31, 1976.

The transaction was, according to CMP, in the interest of both parties inasmuch as PSNH required additional energy due to the outage of their Merrimack Unit No. 2.

CMP has requested waiver of the Regulations under the Federal Power Act to allow the retroactive effective date.

A copy of the filing was served on PSNH.

Any person desiring to be heard or to protest said filing should file a petition to intervene or protest with the Federal Power Commission, 825 North Capitol Street, NE., Washington, D.C. 20426, in accordance with §§ 1.8 and 1.10 of the Commission's rules and practice and procedure (18 CFR 1.8, 1.10). All such petitions or protests should be filed on or before July 23, 1976. Protests will be considered by the Commission in determining the appropriate action to be taken, but will not serve to make protestants parties to the proceeding. Any person wishing to become a party must file a petition to intervene. Copies of this filing are on file with the Commission and are available for public inspection.

KENNETH F. PLUMB, *Secretary.*

[FR Doc.76-20768 Filed 7-16-76;8:45 am]

[Docket No. RI76-133]

CLARK OIL PRODUCING

Petition for Special Relief

JULY 9, 1976.

Take notice that on June 24, 1976, Clark Oil Producing Co. (Petitioner), 601 Jefferson, Houston, Texas 77002, filed a petition for special relief in Docket No. RI76-133, pursuant to § 2.56(g)(2) of the Commission's rules of practice and procedure (18 CFR § 2.56a(a)(1) of the Commission's rules of practice and procedure for gas sales to Trunkline Gas Company from the West Cameron Block 639 Field, Offshore Louisiana, Federal Domain, located in water 365 feet in depth.

Petitioner, a small producer under a certificate issued in Docket No. CS71-447 states that it owns a 15% working interest in the West Cameron Block 639 lease. Petitioner further states that it seeks a rate of $2.0418 per Mcf escalated 4% per year.

Any person desiring to be heard or to make any protest with reference to said petition should on or before July 26, 1976, file with the Federal Power Commission, Washington, D.C. 20426, a petition to intervene or a protest in accordance with the requirements of the Commission's rules of practice and procedure (18 CFR 1.8 or 1.10). All protests filed with the Commission will be considered by it in determining the appropriate action to be taken but will not serve to make the protestants parties to the proceeding. Any party wishing to become a party to a proceeding, or to participate as a party in any hearing therein, must file a petition to intervene in accordance with the Commission's rules.

KENNETH F. PLUMB, *Secretary.*

[FR Doc.76-2057 Filed 7-16-76;8:45 am]

[Docket No. ER76-773]

CLEVELAND ELECTRIC ILLUMINATING CO.

Filing of Service Schedule

JULY 12, 1976.

Take notice that on July 2, 1976 The Cleveland Electric Iluminating Company (Company) tendered for filing with the Commission an executed Service Schedule B providing for firm power service to the City of Cleveland, Ohio pursuant to the provisions of an interconnection agreement made previously by the two parties and filed with the Commission in Docket No. E-7631, et al. April 28, 1975.

The Company states that it will receive less revenues under Service Schedule B than it would receive if service of the same duration was provided under Service Schedule A, which was filed with the basic interconnection agreement and provides for three classes of service.

The Company requests waiver of its notice requirements so that Service Schedule B, which was executed by the parties on June 30, 1976, may take effect on July 1, 1976.

Any person desiring to be heard or to protest said application should file a petition to intervene or protest with the Federal Power Commission, 825 North Capiotl Street NE., Washington, D.C. 20426, in accordance with §§ 1.8 and 1.10 of the Commission's rules of practice and procedure (18 CFR 1.8, 1.10). All such petitions or protests should be filed on or before July 23, 1976. Protests will be considered by the Commission in determining the appropriate action to be taken, but will not serve to make protestants parties to the proceeding. Any person wishing to become a party must file a petition to intervene. Copies of this application are on file with the Commission and are available for public inspection.

KENNETH F. PLUMB, *Secretary.*

[FR Doc.76-20778 Filed 7-16-76;8:45 am]

[Docket No. RP75-8, (PGA76-5)]

COMMERCIAL PIPELINE COMPANY, INC.

PGA Filing

JULY 12, 1976.

Take notice that on June 21, 1976 Commercial Pipeline Company, Inc. (Commercial) tendered for filing Twelfth Revised Sheet No. 3A and Alternate Twelfth Revised Sheet No. 3A, reflecting Purchased Gas Adjustments and effective dates as set out below:

Sheet No.	Current adjustments	Cumulative adjustments	Effective date
3A 12th revised	$0.0352	$0.3026	July 23, 1976
3A alternate 12th revised	.0392	.3066	Do.

Commercial states that these revisions track precisely similar revisions in the tariff of Cities Service Gas Company, its sole supplier. Commercial requests waiver of notice to the extent required to permit said tariff sheets to become effective as proposed.

Any person desiring to be heard or to protest said filing should file a petition to intervene or protest with the Federal Power Commission, 825 North Capitol Street, N.E., Washington, D.C. 20426, in accordance with §§ 1.8 and 1.10 of the Commission's rules of practice and procedure (18 CFR 1.8, 1.10). All such petitions or protests should be filed on or before July 20, 1976. Protests will be considered by the Commission in determining the appropriate action to be taken, but will not serve to make protestants parties to the proceeding. Any person wishing to become a party must file a petition to intervene. Copies of this filing are on file with the Commission and are available for public inspection.

KENNETH F. PLUMB,
Secretary.

[FR Doc.76-20771 Filed 7-16-76;8:45 am]

[Docket No. ER76-320]

CONNECTICUT LIGHT AND POWER CO.

Compliance Filing

JULY 12, 1976.

Take notice that on July 2, 1976 The Connecticut Light and Power Company (CL&P) submitted the actual bills and billing determinants for its wholesale customers under Rate R-3 for March and April 1976, together with the same two months computed at Rate R-2, as was required by Ordering Paragraph (B) of the Commission's order in the above-captioned dockets. CL&P submitted also an explanation for differences as well as responsive pleadings to earlier pleadings made by the parties in this case.

Any person desiring to be heard should file comments with the Federal Power Commission, 825 North Capitol Street, NE., Washington, D.C. 20426, in accordance with §§ 1.8 and 1.10 of the Commission's rules of practice and procedure (18 CFR 1.8, 1.10). All such comments should be filed on or before August 8, 1976. Comments will be considered by the Commission in determining the appropriate action to be taken, but will not serve to make protestants parties to the proceeding. Any person wishing to become a party must file a petition to intervene. Copies of this filing are on file with the Commission and are available for public inspection.

KENNETH F. PLUMB,
Secretary.

[FR Doc.76-20750 Filed 7-16-76;8:45 am]

[Docket No. ER76-760]

CONNECTICUT LIGHT AND POWER CO.

Purchase Agreement

JULY 9, 1976.

Take notice that on June 21, 1976, The Connecticut Light and Power Company (CL&P) tendered for filing a proposed rate schedule pertaining to a Purchase Agreement between CL&P, The Hartford Electric Light Company (HELCO) and Western Massachusetts Electric Company (WMECO and together with CL&P and HELCO, the NU Companies) and Consolidated Edison Company of New York, Inc. (Edison) dated as of April 30, 1976.

CL&P states that the Purchase agreement provides for a sale to Edison of varying percentages of capacity and energy from the NU Companies' entitlements of Vermont Electric Power Company's entitlements in Vermont Yankee (the VELCO Contract) and Merrimack Unit No. 2 of the Public Service Company of New Hampshire (the Merrimack Contract) during weekend and holiday periods from May 1, 1976 to October 31, 1976. CL&P requests that in order to permit Edison to receive the capacity and energy pursuant to the Purchase Agreement, the Commission, pursuant to Section 35.11 of its Regulations, waive the thirty-day notice period and permit the rate schedule to become effective on May 1, 1976.

CL&P states that a copy of the rate schedule has been mailed or delivered to HELCO, Hartford, Connecticut, WMECO, West Springfield, Massachusetts and Edison, New York, New York.

Any person desiring to be heard or to protest said filing should file a petition to intervene or protest with the Federal Power Commission, 825 North Capitol Street NE., Washington, D.C. 20426, in accordance with §§ 1.8 and 1.10 of the Commission's rules of practice and procedure (18 CFR 1.8, 1.10). All such petitions or protests should be filed on or before July 19, 1976. Protests will be considered by the Commission in determining the appropriate action to be taken, but will not serve to make protestants parties to the proceeding. Any person wishing to become a party must file a petition to intervene. Copies of this filing are on file with the Commission and are available for public inspection.

KENNETH F. PLUMB,
Secretary.

[FR Doc.76-20759 Filed 7-16-76;8:45 am]

[Docket No. ER76-320]

CONNECTICUT LIGHT AND POWER CO.

Settlement Conference

JULY 12, 1976.

Take notice that on July 20, 1976, a conference to discuss the issues in the captioned proceeding will be convened at the offices of the Federal Power Commission, 825 North Capitol Street NE., Washington, D.C. 20426. The conference will convene at 9:30 a.m. The room number of such conference will be posted with the schedule of hearings on the Second Floor of the Commission's offices.

Customers and other interested persons will be permitted to attend, but if such persons have not previously been permitted to intervene by order of the Commission, such attendance at the conference will not be deemed to authorize such intervention as a party in the proceedings.

All parties will be expected to come fully prepared to discuss the merits of all issues concerning the lawfulness of the applicant's proposed changes to its rates and any procedural matters preparatory to a full evidentiary hearing, or to make commitments with respect to such issues and any offers of settlement or stipulation discussed at the conference. Failure to attend the conference shall constitute a waiver of all objections to stipulations and agreements reached by the parties in attendance at the conference.

KENNETH F. PLUMB,
Secretary.

[FR Doc.76-20751 Filed 7-16-76;8:45 am]

CONSERVATION-TECHNICAL ADVISORY TASK FORCE—EFFICIENCY IN USE OF GAS

Meeting

National Gas Survey agenda; meeting of Conservation-Technical Advisory Task Force—efficiency in use of gas, Conference Room 5200; Federal Power Commission, Union Plaza Building, 825 North Capitol Street, NE., Washington, D.C. 20426, August 18, 1976, 9:30 a.m.; Presiding: Mr. James R. Kirby, Coordinating Representative & Secretary, Federal Power Commission.

1. Call to order and introductory remarks—Mr. John R. Kirby.
2. Discussion of Task Force Progress to date—Mr. James Woodruff and Mr. John A. Irwin.
3. Revise draft report.
4. Selection of next meeting date.
5. Discussion of other matters.
6. Adjournment—Mr. James Kirby.

This meeting is open to the public. Any interested person may attend, appear before, or file statements with the Committee—which statements, if in written form, may be filed before or after the meeting, or if oral, at the time and in the manner permitted by the Committee.

KENNETH F. PLUMB,
Secretary.

[FR Doc.76-20747 Filed 7-14-76;2:50 pm]

[Docket No. ER76-765]

DETROIT EDISON CO.

Cancellation of Rate Schedule

JULY 9, 1976.

Take notice that on June 17, 1976, The Detroit Edison Company (DE) tendered for filing a Notice of Cancellation of Rate Schedule FPC No. 6 consisting of the Electricity Supply Agreement between DE and the Village of Clinton. DE states that the effective date of the cancellation is July 15, 1976. DE states that the rate schedule is being canceled because it has become uneconomic to perform the service under the aforesaid contract. DE states that it hopes a new agreement will be forthcoming shortly.

Any person desiring to be heard or to protest said tender should file a peti-

tion to intervene or protest with the Federal Power Commission, 825 North Capitol Street, NE., Washington, D.C. 20426, in accordance with §§ 1.8 and 1.10 of the Commission's rules of practice and procedure (18 CFR 1.8, 1.10). All such petitions or protests should be filed on or before July 20, 1976. Protests will be considered by the Commission in determining the appropriate action to be taken, but will not serve to make protestants parties to the proceeding. Any person wishing to become a party must file a petition to intervene. Copies of this tender are on file with the Commission and are available for public inspection.

KENNETH F. PLUMB,
Secretary.

[FR Doc.76-20761 Filed 7-16-76;8:45 am]

[Docket No. ER76-764]

DETROIT EDISON CO.

Cancellation of Rate Schedule

JULY 9, 1976.

Take notice that on June 17, 1976, The Detroit Edison Company (DE) tendered for filing a Notice of Cancellation of Rate Schedule FPC No. 2 consisting of the Electricity Supply Agreement between DE and the City of Croswell. DE states that the effective date of the cancellation is July 15, 1976. DE states that the rate schedule is being cancelled because it has become uneconomic to perform the service under the aforesaid contract. DE states that it hopes that a new agreement wil be forthcoming shortly.

Any person desiring to be heard or to protest said tender should file a petition to intervene or protest with the Federal Power Commission, 825 North Capitol Street, NE., Washington, D.C. 20426, in accordance with §§ 1.8 and 1.10 of the Commission's rules of practice and procedure (18 CFR 1.8, 1.10). All such petitions or protests should be filed on or before July 20, 1976. Protests will be considered by the Commission in determining the appropriate action to be taken, but will not serve to make protestants parties to the proceeding. Any person wishing to become a party must file a petition to intervene. Copies of this tender are on file with the Commission and are available for public inspection.

KENNETH F. PLUMB,
Secretary.

[FR Doc.76-20762 Filed 7-16-76;8:45 am]

[Docket No. RI76-135]

DIAMOND SHAMROCK CORP.

Petition for Special Relief

JULY 9, 1976.

Take notice that on June 29, 1976, Diamond Shamrock Corporation (Petitioner), P.O. Box 631, Amarillo, Texas 79105, filed a petition for special relief in Docket No. RI76-135, pursuant to § 2.56a(g)(2) of the Commission's rules of practice and procedure (18 CFR § 2.56 a(g)(2)). Petitioner is seeking special relief from the rate established in § 2.56 a(a)(1) of the Commission's rules of practice and procedure for gas sales to Trunkline Gas Company from the West Cameron Block 639 Field, Offshore Louisiana, Federal Domain, located in water 365 feet in depth.

Petitioner states that it owns a 13.34% working interest in the West Cameron Block 639 lease. Petitioner further states that it seeks a rate of $1.8272 per Mcf escalated 4% per year.

Any person desiring to be heard or to make any protest with reference to said petition should on or before July 27, 1976, file with the Federal Power Commission, Washington, D.C. 20426, a petition to intervene or a protest in accordance with the requirements of the Commission's rules of practice and procedure (18 CFR 1.8 or 1.10). All protests filed with the Commission will be considered by it in determining the appropriate action to be taken but will not serve to make the protestants parties to the proceeding. Any party wishing to become a party to a proceeding, or to participate as a party in any hearing therein, must file a petition to intervene in accordance with the Commission's rules.

KENNETH F. PLUMB,
Secretary.

[FR Doc.76-20756 Filed 7-16-76;8:45 am]

[Docket No. RI76-134]

DOUGLAS WEATHERSTON AND GEORGE WEATHERSTON

Application for Special Relief

JULY 13, 1976.

Take notice that on June 23, 1976, Douglas Weatherston and George Weatherston (Applicants), Alamo National Bank Building, San Antonio, Texas 78205, filed in Docket No. RI76-134 an application for special relief pursuant to Section 2.76 of the Commission's General Policy and Interpretations. Applicants seek a rate of $1.80 per Mcf for the sale of natural gas to Valley Gas Transmission, Inc. from certain properties located in Duval County, Texas. Applicants assert that without a substantial price increase they will be unable to recover remaining reserves, including costs of any equipment purchases, thereby making abandonment of the properties imminent.

Any person desiring to be heard or to make any protest with reference to said petition should on or before July 29, 1976, file with the Federal Power Commission, Washington, D.C. 20426, a petition to intervene or a protest in accordance with the requirements of the Commission's rules of practice and procedure (18 CFR 1.8 or 1.10). All protests filed with the Commission will be considered by it in determining the appropriate action to be taken but will not serve to make the protestants parties to the proceeding. Any party wishing to become a party to a proceeding, or to participate as a party in any hearing therein, must file a petition to intervene in accordance with the Commission's rules.

KENNETH F. PLUMB,
Secretary.

[FR Doc.76-20770 Filed 7-16-76;8:45 am]

[Docket No. RP76-59]

EL PASO NATURAL GAS CO.

Tariff Filing

JULY 13, 1976.

Take notice that on June 30, 1976, El Paso Natural Gas Company ("El Paso") filed, pursuant to Part 154 of the Commission's Regulations Under the Natural Gas Act, certain revised and substitute tariff sheets to its FPC Gas Tariff,[1] providing proposed adjustments to its rates contained on the tariff sheets submitted in the notice of change in rates filed at Docket No. RP76-59 on January 30, 1976, and currently under suspension until August 1, 1976.[2]

El Paso states that the rates set forth on the tendered tariff sheets differ from the rates which were suspended in Docket No. RP76-59 in that the suspended rates have been adjusted to include the effect of the net increase in rates of 3.53¢ per Mcf authorized in El Paso's notice of change in rates filed on February 23, 1976, at Docket Nos. RP72-155 and RP75-39, pursuant to the Purchased Gas Cost Adjustment Provision ("PGAC") applicable to El Paso's said tariff and placed into effect on April 1, 1976, and April 2, 1976.[3] El Paso further states that each of the tendered Statement of Rates substitute revised tariff sheets include the rates suspended at Docket No. RP76-59, adjusted to include: (i) The current Annualized Purchased Gas Cost Adjustment of 4.20¢ per Mcf contained in said PGAC filing, and (ii) the Purchased Gas Surcharge Adjustment of 3.55¢ per Mcf authorized in said PGAC filing. Additionally, the Currently Effective Tariff Rates have been adjusted by the authorized PGAC adjustments.

El Paso states that ordering paragraph (C) of the Commission order issued February 27, 1976, at Docket No. RP76-59 contained the following provisions:

(C) Prior to August 1, 1976, El Paso shall file substitute tariff sheets reflecting the elimination of costs included in the proposed rates associated with facilities which have not been certificated and placed in service by August 1, 1976.

[1] Substitute Seventeenth Revised Sheet No. 3-B and Fourth Revised Sheet No. 63-C.5 to Original Volume No. 1; Substitute Seventh Revised Sheet No. 1-D and Fourth Revised Sheet No. 1-M.5 to Third Revised Volume No. 2; and Substitute Ninth Revised Sheet No. 1-C and Fourth Revised Sheet No. 7-MM.5 to Original Volume No. 2A.

[2] By order issued February 27, 1976, at Docket No. RP76-59, the Commission, among other matters, accepted for filing the said revised tariff sheets and suspended the use thereof until August 1, 1976, or until such time as they are made effective in the manner prescribed by The Natural Gas Act.

[3] El Paso's PGAC was made effective by Commission orders issued March 31, 1976, and May 5, 1976, at Docket Nos. RP72-155 and RP75-39 (PGA76-2 and 76-2a).

El Paso states that, in this regard, the facilities related to such costs have been placed in service and that such costs have been transferred from Account No. 107, Construction Work in Progress, to Account No. 101, Gas Plant in Service, as of April 30, 1976. El Paso states further that the facilities related to such costs do not require specific Commission authorization, therefore, no adjustment is required to be made in the suspended rates under these circumstances.

The filing states that El Paso has concurrently filed its motion to place into effect on August 1, 1976, the end of the suspension period in Docket No. RP76-59, the increased rates in Docket No. RP76-59, as contained in the instant tender, as well as El Paso's related agreement and undertaking respecting El Paso's refund obligations.

In order to effectuate the purposes of the instant filing, El Paso has requested that the Commission grant waiver of its Regulations Under the Natural Gas Act as may be necessary in order to effectuate the instant filing.

El Paso states that copies of the filing and attachments thereto, have been served upon all parties of record in Docket No. RP76-59 and, otherwise, upon all affected customers and interested state regulatory commissions.

Any person desiring to be heard or to make any protest with reference to said tariff filing should, on or before July 23, 1976, file with the Federal Power Commission, Washington, D.C. 20426, a petition to intervene or a protest in accordance with the requirements of the Commission's rules of practice and procedure (18 CFR 1.8 or 1.10) and the regulations under the Natural Gas Act (18 CFR 157.10). All protests filed with the Commission will be considered by it in determining the appropriate action to be taken but will not serve to make the protestants parties to the proceeding. Any person wishing to become a party to a proceeding or to participate as a party in any hearing therein must file a petition to intervene in accordance with the Commission's rules. Copies of this filing are on file with the Commission and are available for public inspection.

KENNETH F. PLUMB,
Secretary.

[FR Doc.76-20766 Filed 7-16-76;8:45 am]

[Docke No. CP76-394]

EQUITABLE GAS CO.

Petition for Declaratory Order

JULY 9, 1976.

Take notice that on June 10, 1976, Equitable Gas Company (Equitable), 420 Boulevard of the Allies, Pittsburgh, Pennsylvania 15219, filed in Docket No. CP76-394 a petition pursuant to section 16 of the Natural Gas Act and § 1.7(c) of the Commission's rules of practice and procedure (18 CFR 157.7(c) for a declaratory order to remove the uncertainty of whether or not Equitable must first secure regulatory approval, specifically, a certificate of public convenience and necessity under section 7(c) of the Natural Gas Act, covering the volumes of natural gas, and any related facilities, which the West Virginia Public Service Commission (West Virginia Commission) has ordered Equitable to sell and deliver to all present and future applicants located in West Virginia, all as more fully set forth in the petition which is on file with the Commission and open to public inspection.

Equitable asserts that it is a Pennsylvania corporation engaged in the business of producing, gathering, purchasing, transporting, and, with certain exceptions, distributing natural gas in West Virginia and Pennsylvania and is a "natural-gas company" within the meaning of the Natural Gas Act.

Equitable states that as of December 31, 1975, it owned and operated approximately 1,140 gas wells, approximately 5,420 miles of pipeline, 20 compressor stations, and 16 gas storage fields and that its annual sales during 1975 were 77,580,203 Mcf of which 3,636,991 Mcf was sold in Equitable's West Virginia Division and 73,943,212 Mcf in Equitable's Pennsylvania Division. Equitable further states that approximately 10 percent of its gas supply in 1975 was purchased from independent producers located in West Virginia, all of whom hold certificates of public convenience and necessity from the Commission, 31 percent from Texas Eastern Transmission Corporation, 24 percent from Tennessee Gas Pipeline Company, a Division of Tenneco Inc., and 18 percent from Kentucky West Virginia Gas Company. Equitable states that the pipeline sales of gas to it are authorized under certificates of public convenience and necessity issued by the Commission. Equitable asserts that in every instance, all the gas produced by it and purchased by it from independent producers in West Virginia leaves the wellhead in a commingled stream with gas ultimately delivered to customers located in the West Virginia and Pennsylvania Divisions; that the gas purchased from Kentucky West Virginia Gas Company also commingles with gas that is ultimately sold in Equitable's West Virginia and Pennsylvania Divisions; and that the gas purchased from Texas Eastern Transmission Corporation also commingles with gas from Equitable's other sources of supply and becomes a part of Equitable's system gas supply available to consumers in both West Virginia and Pennsylvania. Equitable further asserts that gas purchased from Tennessee Gas Pipeline Company can be delivered directly into Equitable's Pittsburgh distribution system or, during periods of lower demand, can be delivered into its transmission system and storage reservoirs as well.

Equitable states that on August 14, 1975, the West Virginia Commission ordered that "Equitable Gas Company shall cease and desist from refusing to serve applicants for new or additional service in West Virginia whose requirements are 30 Mcf per day or less." Equitable further states that, upon filing of a motion for rehearing by Equitable pointing out to the West Virginia Commission that Equitable was a "natural-gas company" under the Natural Gas Act and that the rendition of future service to an unlimited number of customers is not solely a matter within the statutory discretion of the West Virginia Commission, the West Virginia Commission denied said motion for rehearing. Equitable asserts that the West Virginia Commission in its rehearing order expects Equitable to begin immediately to fulfill its public service obligation to serve applicants for gas service of 30 Mcf per day or less and that if such relief and good faith compliance with said order are not forthcoming without further delay, available sanctions will be used to remedy the situation.

Accordingly, Equitable asserts that in light of the demand of the West Virginia Commission, the provisions of section 7(c) of the Natural Gas Act, the rules and regulations of the Commission, and the Commission's Statements of General Policy, Equitable is in need of an order from the Commission declaring the existence, or absence, of jurisdiction of the Commission to regulate, under the terms of the Natural Gas Act, the transportation of the volumes of gas required and the facilities required to deliver such volumes to all or any part of the customers for whom the West Virginia Commission has ordered Equitable to render immediate service.

Any person desiring to be heard or to make any protest with reference to said petition should on or before July 23, 1976, file with the Federal Power Commission, Washington, D.C. 20426, a petition to intervene or a protest in accordance with the requirements of the Commission's rules of practice and procedure (18 CFR 1.8 or 1.10). All protests filed with the Commission will be considered by it in determining the appropriate action to be taken but will not serve to make the protestants parties to the proceeding. Any person wishing to become a party to a proceeding or to participate as a party in any hearing therein must file a petition to intervene in accordance with the Commission's rules.

KENNETH F. PLUMB,
Secretary.

[FR Doc. 76-20786 Filed 7-16-76;8:45 am]

[Docket Nos. E-8008, ER76-211]

FLORIDA POWER & LIGHT CO.

Order Accepting Partial Settlement

JULY 6, 1976.

There is now before us for review in the above-captioned unconsolidated proceedings a settlement agreement[1] which was jointly tendered on February 24, 1976 by the Florida Power and Light Company (FP&L) and the Utilities Commission of the City of New Smyrna Beach, Florida (New Smyrna Beach). By this settlement these parties propose to

[1] Accompanied by a joint motion for approval thereof.

resolve their differences in these dockets and provide for the construction of a parallel interconnection and the initiation of interchange service between their respective systems. The settlement was duly noticed on March 3, 1976. No party opposes the settlement proposal in substance, but Staff expresses concern as to the method by which certain of the rates for interchange service will be calculated. In endorsing the settlement, Staff wishes to preserve its right to review and, if appropriate, contest the matter at such time as the new rate schedules are actually filed. We share Staff's concern in this respect and, accordingly, our approval of the settlement will be conditioned as set forth below.

BACKGROUND

New Smyrna Beach is presently a wholesale, partial requirements customer of FP&L. On January 23, 1973, FP&L tendered for filing in Docket No. E-8008 revised sheets in which it proposed to replace the contract-type filings then in use with a tariff of general applicability and to provide service to both its five cooperative wholesale customers and its two municipal wholesale customers under a common rate schedule, designated Rate Schedule SR. FP&L's January 23, 1973 filing also reflected a substantial increase in wholesale rates, amounting to about 25 percent for the cooperatives and 40 percent for the municipalities. By order of March 29, 1973, we suspended the proposed revisions and increases for five months, allowing them to become effective on September 1, 1973, subject to refund. New Smyrna Beach was permitted to intervene on November 21, 1973, and on January 21, 1974 was authorized to introduce evidence on the question of whether or not FP&L should be directed under section 202 of the Federal Power Act to establish an auxiliary interconnection which New Smyrna Beach for the purpose of making available to that city short term interchange power. New Smyrna Beach was specifically denied the right to present testimony or exhibits on the so-called price squeeze allegedly perpetrated by FP&L to the city's disadvantage. In due course New Smyrna Beach appealed that denial to the Court of Appeals for the District of Columbia circuit, where it is currently pending disposition in Docket No. 74-1371. In his initial decision issued on November 26, 1974, in Docket No. E-8008, Presiding Administrative Law Judge Jair Kaplan, after reviewing the record, found that New Smyrna Beach had failed to make a sufficient showing to justify issuance of an order directing FP&L to establish the requested interconnection. Judge Kaplan did, however, urge the parties to "settle their differences and reach an amiable agreement concerning the interconnection matter." New Smyrna Beach has excepted to the subject initial decision in this respect.[2] The case is presently under Commission review.

On October 31, 1975, FP&L tendered for filing in Docket No. ER76-211 revised tariff sheets reflecting an increase in its Rate Schedule SR. Pursuant to order of December 31, 1975, that increase became effective subject to refund June 1, 1976, following a five month suspension period. New Smyrna Beach has been granted intervention in that proceeding as well.

THE SETTLEMENT

The settlement and supporting motion each recite that this agreement is the product of extensive negotiations between these two parties. It is directed solely to the matter of an interconnection between FP&L and New Smyrna Beach and would have no material effect upon the general rate increases at issue in these dockets. Salient features of the settlement include:

(a) FP&L and New Smyrna Beach shall enter into a contract for Interchange service pursuant to which their respective systems will be interconnected and normally operated in parallel, with circuits closed at all interconnection points. Four types of service are contemplated. Under Service Schedule A, "Emergency Interchange Service," energy will be supplied by one party to the other under emergency conditions resulting from unexpected temporary loss of power from normally available sources. Under Service Schedule B, "Scheduled Interchange Service", energy will be supplied, for the most part, during periods when the recipient is engaged in routine overhaul of its facilities. Under Service Schedule C, "Economy Energy Interchange Service", energy may be transferred when one party is able to produce and deliver energy to the other at a cost below that which the latter would otherwise incur for its own production or other procurement. Under Schedule D, "Firm Interchange Service", transfers of energy may be conducted over a period of not less than 12 months and not more than 36 months by commitment between the parties.

(b) FP&L and New Smyrna Beach shall enter into a Supplementary Agreement providing for the construction of additional transmission facilities and the construction, operation and maintenance of a 115 kv interchange point between their respective systems.

(c) FP&L and New Smyrna Beach shall enter into another Supplementary Agreement providing for service to New Smyrna Beach supplementing its' generation resources in accordance with FPL's Rate Schedule SR that may be in effect from time to time and for the applicability of Schedules A and B of the Contract for Interchange Service.

(d) New Smyrna Beach agrees to withdraw its petitions to intervene and protests in FPC Docket Nos. E-8008 and ER76-211 insofar as they relate to allegations concerning interconnection, interchange, price squeeze or other anticompetitive issues[3] (including the issue of whether FP&L properly classified New Smyrna Beach as a wholesale customer in the same service classification as the Rural Electric Cooperative customers), agrees not to raise such issues in future proceedings before the FPC based upon facts occurring prior to December 23, 1975, and agrees to withdraw its Petitions for Review of FPC Orders issued November 21, 1973 and January 21, 1974 in Docket No. E-8008, currently pending before the United States Court of Appeals for the District of Columbia Circuit in Docket No. 74-1371.

(e) The settlement agreement shall not be deemed to constitute an admission by either party as to any allegations contained therein or agreement by either party as to any particular principle of ratemaking upon which the settlement may be based. Further, the validity of the settlement is conditioned upon its acceptance and approval without modification by the Commission, and upon the approval by the U.S. Court of Appeals for the District of Columbia Circuit of the withdrawal or dismissal of New Smyrna Beach's Petition for Review in Docket No. 74-1371.

The Interchange agreement and supplementary agreements referred to in (a), (b), and (c) above have been executed and are appended to the Settlement Agreement. In the accompanying motion, the parties advise that the high voltage interconnection contemplated in (b), above, will not be completed until late summer 1976, and that, in the interim, should New Smyrna Beach experience outages which would qualify for emergency or maintenance service under Service Schedules A and B, FP&L will waive implementation of the ratchet provision of its tariff on that portion of the metered demand occasioned

[2] In its January 27, 1975 Brief on exceptions, New Smyrna Beach attacked the Judge's decision on the interconnection issue and also took the position that, as a customer having substantial generation of its own, it could not be classified along with non-generating municipal customers under FP&L's Rate Schedule SR. Thereafter, in a letter which New Smyrna Beach filed on February 24, 1975, in lieu of a Brief on Exceptions, New Smyrna Beach, in response to FP&L's Brief on Exceptions, added only that it could not be forced into becoming a "party" to any service contract merely by taking service from time to time from FP&L.

[3] New Smyrna Beach's pledge in this respect is apparently unaffected by the Supreme Court's recent decision in *F.P.C. v. Conway Corporation*, —— USLW —— (Decided June 7, 1976), wherein the Court affirmed a ruling by the U.S. Court of Appeals for the District of Columbia Circuit to the effect that this Commission does have jurisdiction to consider retail rates charged by a particular utility in connection with fixing wholesale rates for that utility which are just and reasonable and not unduly discriminatory.

by such conditions. The motion also provides that, following Commission approval of the Settlement, FP&L will make a timely rate schedule filing of the contract for interchange Service pursuant to Part 35 of the Commission's Regulations.

POSITIONS OF THE PARTIES

Staff responded to the settlement agreement and joint motion on April 21, 1976.[4] Staff generally supports the settlement and service agreements as just and reasonable and in the public interest. Insofar as the various proposed rates are concerned, Staff (1) relates that, by letter of April 1, 1976, FP&L has informed Staff that the level of the Schedule SR rate to be applied to service under the supplementary agreement referred to in (c), above, will be determined in compliance with the outcome of the general rate proceedings in Docket Nos. E-8008 and ER76-211, an approach which Staff endorses, (2) supports both the "split the savings" rate formula in service Schedule C (Economy Energy Interchange Service) and the provision in service Schedule D (Firm Interchange Service) whereby the demand and energy charges for each commitment will be negotiated on a case by case basis, and (3) objects to the rate methodologies proposed in Service Schedule A (Emergency Interchange Service) and B (Scheduled Interchange Service) because in each case the energy charge contains both a 10 percent adder and a one mill per kwh adder; in addition, both schedules include a fuel adjustment clause which is designed to operate in the event of an increase in fuel costs but not in the event of a decrease.

Staff next references the proceedings currently consolidated in Docket Nos. E-8769 et al., involving contracts for interchange service between FP&L and Florida Power Corporation, Fort Pierce Electric Department, Orlando Utilities Commission, Tampa Electric Company, Vero Beach Municipal Power Plant, Jacksonville Electric Authority, Fort Pierce Utilities Authority, and Lake Worth Utilities Authority, respectively.[5] Staff asserts that the issues as yet unresolved in those proceedings include (1) the propriety of using the 10% and one mill per kwh adders in computing the energy charge for emergency and scheduled service and (2) the validity of the fuel adjustment clauses. Due to the similarity of issues, Staff recommends that the Commission sever the matter of rate determination for service under Service Schedules A and B from the proceedings in Docket Nos. E-8008 and ER76-211, suspend the use of such rates for one day, thereafter allowing them to become effective subject to refund, consolidate the matter for disposition with the proceedings in Docket Nos. E-8769, et al., and approve the remaining terms of the settlement.

In a May 6, 1976, response to Staff's comments, FP&L states that it does not object to modification of the rates set forth in Service Schedules A and B to comport with the outcome of the proceedings in Docket No. E-8769, et al. FP&L takes the position, however, that the suspension proposed by Staff would be premature in that FP&L has not yet officially filed the contract for interchange service, with its components and supplements, as a rate schedule and will do so only after Commission approval of the settlement. Moreover, FP&L avers that, if and when it files the subject contract, it will do so under § 35.12 of the regulations. Because this contract represents the initiation of interchange service between FP&L and New Smyrna Beach, FP&L chooses to treat it as an initial rate schedule rather than as a change in rate schedule, such that the Commission is without authority under Section 205 of the Federal Power Act to suspend the use thereof and require refunds but may instead do no more than investigate the rates and, if appropriate, order that they be modified prospectively.

DISCUSSION

Our review of the instant settlement indicates that, in principle, it constitutes a just and reasonable resolution of the issues which it seeks to address in Docket Nos. E-8008 and ER76-211. We shall accordingly grant the joint motion of FP&L and New Smyrna Beach for approval thereof, with certain reservations. To begin with, we are in agreement with Staff that the manner in which the rates under Service Schedules A and B are to be derived has not been shown to be wholly justified. In approving the terms of the settlement therefore, we expressly preserve our right to unfettered review of, inter alia, the rate levels contained in Service Schedules A and B of the Contract for Interchange Service at such time as that contract is officially tendered for filing. Pending such filing, and dependent upon the posture of the proceedings in Docket Nos. E-8769, et al., we shall reject without prejudice Staff's suggestion to sever certain rate matters from the instant proceeding and consolidate them with the proceedings in those dockets.

It is our opinion that, if and when filed, the FP&L-New Smyrna Beach interchange agreement, as suplemented, will be treated not as an initial rate filing but as a change in service. Sections 35.1 (b) and (c) of our Regulations under the Federal Power Act provide as follows:

(b) A rate schedule applicable to a transmission or sale of electric energy other than that which proposes to supersede, supplement, cancel or otherwise change the provisions of a rate schedule required to be on file with this Commission, shall be filed as an initial rate in accordance with § 35.12.

(c) A rate schedule applicable to a transmission or sale of electric energy which proposes to supersede, supplement, cancel or otherwise change any of the provisions of a rate schedule required to be on file with this Commission (such as providing for other or additional rates, charges, classifications or services, or rules, regulations, practices or contracts for a particular customer or customers) shall be filed as a change in rate in accordance with § 35.13, except Notices of Cancellation or Termination which shall be filed as a change in accordance with § 35.15.

The proferred FP&L-New Smyrna Beach Interchange agreement, as supplemented, clearly falls within the purview of § 35.1(c). No notice of cancellation of service having been filed pursuant to § 35.15 of the regulations, New Smyrna Beach remains a tariff cusotmer of FP&L and will presumably continue to do so up to and after[6] such time as interchange service is commenced under the subject contract. Hence there is no basis in fact for viewing FP&L's expected filing[7] as proposing other than a change in service to an existing customer. As such, FP&L's filing will be subject to the dictates of section 205 of the Federal Power Act.

Consistent with the terms of the settlement agreement, it is the settlement package which we today approve and not necessarily any principle upon which that agreement may be based.

The Commission finds: Subject to the reservation(s) hereinabove discussed, the settlement agreement jointly tendered on February 24, 1976, by Florida Power & Light Company and the Utilities Commission of the City of New Smyrna Beach, Florida constitutes a just and reasonable resolution of the issues addressed by such settlement agreement in these dockets, and, accordingly, the accompanying motion for approval thereof should be granted.

The Commission orders: Subject to the reservation(s) hereinabove noted, the subject motion is granted and the subject settlement agreement approved.

By the Commission.

KENNETH F. PLUMB,
Secretary.

[FR Doc.76-20772 Filed 7-16-76;8:45 am]

[Docket No. RP76-113]

GREAT LAKES GAS TRANSMISSION CO. ET AL.

Extension of Time

JULY 9, 1976.

Great Lakes Gas Transmission Company, Inter-City Minnesota Pipeline Ltd., Michigan Wisconsin Pipe Line Company, Midwestern Gas Transmission Company, Northwest Pipeline Corporation, Pacific Gas Transmission Com-

[4] By notice issued March 10, 1976, the Secretary granted Staff's March 5, 1976, motion to extend the comment period until April 21, 1976.

[5] See orders of July 3 and December 8, 1975, in Docket Nos. E-8769, et al. The procedural schedule therein presently calls for service of company testimony on or before July 6, 1976, with the hearing to convene on October 15, 1976.

[6] The second supplementary agreement referred to above contemplates the continuation of certain service to New Smyrna Beach from FP&L in accordance with the terms of Rate Schedule SR.

[7] Under § 35.3(b), FP&L will be permitted to file up to 90 days preceding the date upon which construction is completed and service initiated. In this regard, note our rejection of a similar filing by FP&L on behalf of itself and its other wholesale municipal customer, the City of Homestead, Florida. Florida Power & Light Co., Docket Nos. E-8769, et al. (order issued July 3, 1975).

pany, The Montana Power Company, St. Lawrence Gas Company, Inc., Vermont Gas Systems, Inc.

On July 6, 1976, Montana Power Company filed a request for an extension of time within which to file a response to the order issued June 28, 1976, in the above-designated proceeding.

Upon consideration, notice is hereby given that Montana Power Company is granted an extension of time to and including July 19, 1976, within which to file the required information.

KENNETH F. PLUMB,
Secretary.

[FR Doc.76-20765 Filed 7-16-76;8:45 am]

[Rate Schedule Nos. 13, etc.]

H. L. HUNT, ET AL.; ESTATE

Rate Change Filings Pursuant to Commission's Opinion No. 699-H

JULY 12, 1976.

Take notice that the producers listed in the Appendix attached hereto have filed proposed increased rates to the applicable new gas national ceiling based on the interpretation of vintaging concepts set forth by the Commission in its Opinion No. 699-H, issued December 4, 1974. Pursuant to Opinion No. 699-H the rates, if accepted, will become effective as of the date of filing.

The information relevant to each of these sales is listed in the Appendix.

Any person desiring to be heard or to make any protest with reference to said filings should on or before July 23, 1976, file with the Federal Power Commission, Washington, D.C. 20426, a petition to intervene or a protest in accordance with the requirements of the Commission's rules of practice and procedure (18 CFR 1.8 or 1.10). A protest will not serve to make the protestant a party to the proceeding. Any party wishing to become a party to a proceeding must file a petition to intervene in accordance with the Commission's Rules.

KENNETH F. PLUMB,
Secretary.

Appendix

Filing date	Producer	Rate Schedule No.	Buyer	Area
June 23, 1976	Estate of H. L. Hunt, 1401 Elm St., Dallas, Tex. 75202.	13	Trunkline Gas Co.	Southern Louisiana.
Do	Secure Trusts, 1401 Elm St., Dallas, Tex. 75202.	2	do	Do.
June 28, 1976	W. F. Dalton, trustee, 1600 1st National Bank Bldg., Dallas, Tex. 75202.	1	do	Do.
Do	Hunt Industries, 1401 Elm St., Dallas, Tex. 75202.	1	do	Do.
Do	J. A. Goodson, trustee, 2500 1st National Bank Bldg., Dallas, Tex. 75202.	1	do	Do.

[FR Doc.76-20789 Filed 7-16-76;8:45 am]

[Docket Nos. ER76-714; ER76-715; ER76-716]

INDIANA AND MICHIGAN ELECTRIC CO.

Motion for Reconsideration

JULY 13, 1976.

On June 29, 1976, a letter was received from the Honorable Vance Hartke, U.S. Senator from Indiana, requesting that the Commission re-evaluate the suspension period allowed in the Commission's order of June 25, 1976, in the above-captioned proceeding. Take notice that such letter will be treated as a motion for reconsideration of the Commission's June 25 order.

Any person desiring to be heard as to said motion should file a response with the Federal Power Commission, 825 North Capitol Street NE., Washington, D.C. 20426, in accordance with § 1.34(d) of the Commission's rules of practice and procedure (18 CFR 1.34). All such responses should be filed on or before July 20, 1976. Responses will be considered by the Commission in determining the appropriate action to be taken, but will not serve to make protestants parties to the proceeding. Any person wishing to become a party must file a petition to intervene. Copies of this motion are on file with the Commission and are available for public inspection.

KENNETH F. PLUMB,
Secretary.

[FR Doc.76-20767 Filed 7-16-76;8:45 am]

[Docket No. CP76-297]

McCULLOCH INTERSTATE GAS CORP.

Amendment to Application

JULY 13, 1976.

Take notice that on June 30, 1976,[1] McCulloch Interstate Gas Corporation (Applicant), 10880 Wilshire Blvd., Los Angeles, California 90024, filed in Docket No. CP76-297 an amendment to its application filed in said docket pursuant to section 7(c) of the Natural Gas Act, by which amendment Applicant proposes to construct and operate additional facilities, all as more fully set forth in the amendment which is on file with the Commission and open to public inspection.

The application in this proceeding requests authorization to construct and operate one mile of 6-inch pipeline and appurtenant facilities from the Dilts Wells No. 1 and No. 2, Manning Field, Converse County, Wyoming, to a point of interconnection with Mountain Fuel Supply Company's (Mountain Fuel) 10-inch line in Converse County for sale and delivery of natural gas to Colorado Interstate Gas Company (Colorado Interstate). It was proposed that Mountain Fuel would transport the gas approximately 3.5 miles for delivery to Applicant at an interconnection of Mountain Fuel's line with Applicant's 16-inch Powder River Basin transmission line in Converse County for transportation and delivery to Colorado Interstate at the latter's 16-inch Powder River lateral in Converse County. By the instant amendment Applicant now proposes to construct and operate 3.5 miles of 4½-inch line connecting the proposed gathering line with Applicant's 16-inch Powder River Basin transmission line in Converse County in lieu of having the gas transported that distance by Mountain Fuel.

The amendment indicates that the total cost of all facilities proposed in the subject docket is estimated to be $235,000, which costs Applicant proposes to finance from funds on hand.

Any person desiring to be heard or to make any protest with reference to said amendment should on or before August 2, 1976, file with the Federal Power Commission, Washington, D.C. 20426, a petition to intervene or a protest in accordance with the requirements of the Commission's rules of practice and procedure (18 CFR 1.8 or 1.10) and the regulations under the Natural Gas Act (18 CFR 157.10). All protests filed with the Commission will be considered by it in determining the appropriate action to be taken but will not serve to make the protestants parties to the proceeding. Any person wishing to become a party to a proceeding or to participate as a party in any hearing therein must file a petition to intervene in accordance with the Commission's rules. Persons who have heretofore filed need not file again.

KENNETH F. PLUMB,
Secretary.

[FR Doc.76-20777 Filed 7-16-76;8:45 am]

[1] The amendment was tendered for filing June 30, 1976; however, the fee required by § 159.1 of the regulations under the Natural Gas Act (18 CFR 159.1) was not paid until July 2, 1976. Thus, filing was not completed until the latter date.

[Docket No. RP76-114]

MIDWESTERN GAS TRANSMISSION CO.

Filing of Proposed Changes In Rates

JULY 8, 1976.

Take notice that on June 30, 1976, Midwestern Gas Transmission Company (Midwestern) tendered for filing proposed changes in its FPC Gas Tariff to be effective on August 1, 1976, consisting of the following revised tariff sheets:

Third Revised Volume No. 1,
Fifteenth Revised Sheet No. 5,
Original Sheet No. 5A,
Second Revised Sheet Nos. 80 and 85.
Original Volume No. 2,
First Revised Sheet No. 37.

The proposed changes would increase revenues from jurisdictional sales by $4,758,726 for the Southern System and $3,796,501 for the Northern System, based on the test period consisting of the twelve months ended February 29, 1976, adjusted for known and measurable changes through November 30, 1976.

Midwestern states that the increased rates are required to reflect a proposed composite book depreciation and amortization rate of 5.50%, an overall rate of return of 11.48%, increases in cost of materials, supplies and wages, increases in taxes, and substantially reduced sales for the Southern System due to gas supply curtailment.

Any person desiring to be heard or to protest said filing should file a petition to intervene or protest with the Federal Power Commission, 825 North Capitol Street, NE., Washington, D.C. 20426, in accordance with §§ 1.8 and 1.10 of the Commission's rules of practice and procedure (18 CFR 1.8, 1.10). All such petitions or protests should be filed on or before July 23, 1976. Protests will be considered by the Commission in determining the appropriate action to be taken, but will not serve to make protestants parties to the proceeding. Any person wishing to become a party must file a petition to intervene. Copies of this filing are on file with the Commission and are available for public inspection.

KENNETH F. PLUMB,
Secretary.

[FR Doc.76-20755 Filed 7-16-76;8:45 am]

[Project No. 2709]

MONONGAHELA POWER CO., ET AL.

Extension of Time

JULY 9, 1976.

In the matter of: Monongahela Power Company, Potomac Edison Company, West Penn Power Company.

On July 2, 1976, the State of West Virginia filed a motion for an extension of time for the filing of briefs on exceptions to the Initial Decision issued June 10, 1976, in the above-designated proceeding.

Upon consideration, notice is hereby given that the date for filing briefs on exceptions in this proceeding is extended to and including July 27, 1976, for all parties. The date for filing briefs opposing exceptions is extended to and including August 16, 1976.

KENNETH F. PLUMB,
Secretary.

[FR Doc. 76-20754 Filed 7-16-76;8:45 am]

[Docket No. CP76-400]

NATURAL GAS PIPELINE COMPANY OF AMERICA

Application

JULY 13, 1976.

Take notice that on June 21, 1976, Natural Gas Pipeline Company of America (Applicant), 122 South Michigan Avenue, Chicago, Illinois 60603, filed in Docket No. CP76-400 an application pursuant to section 7(b) of the Natural Gas Act for permission and approval to abandon certain gas purchase facilities in Arkansas County, Texas, all as more fully set forth in the application which is on file with the Commission and open to public inspection.

Applicant proposes to abandon 0.27 mile of 4-inch pipeline, a 3-inch measuring facility and a tap connection installed to effectuate a 60-day emergency purchase from Clinton Oil Company (Clinton). Applicant states that it retained such facilities in place and utilized them for the receipt of gas from Clinton under a limited-term purchase agreement, dated August 7, 1972, which sale was authorized by order issued December 1, 1972, in Docket No. CI73-255. Applicant states that the limited-term sale by Clinton terminated on October 3, 1974, and that this source of gas is no longer available to Applicant and, therefore, the subject facilities are no longer required. Applicant proposes to remove all salvable aboveground facilities and retain them in stock until needed. All other facilities would be abandoned in place, it is stated.

Any person desiring to be heard or to make any protest with reference to said application should on or before August 2, 1976 file with the Federal Power Commission, Washington, D.C. 20426, a petition to intervene or a protest in accordance with the requirements of the Commission's rules of practice and procedure (18 CFR 1.8 or 1.10) and the regulations under the Natural Gas Act (18 CFR 157.10). All protests filed with the Commission will be considered by it in determining the appropriate action to be taken but will not serve to make the protestants parties to the proceeding. Any person wishing to become a party to a proceeding or to participate as a party in any hearing therein must file a petition to intervene in accordance with the Commission's rules.

Take further notice that, pursuant to the authority contained in and subject to the jurisdiction conferred upon the Federal Power Commission by sections 7 and 15 of the Natural Gas Act and the Commission's rule of practice and procedure, a hearing will be held without further notice before the Commission on this application if no petition to intervene is filed within the time required herein, if the Commission on its own review of the matter finds that permission and approval for the proposed abandonment are required by the public convenience and necessity. If a petition for leave to intervene is timely filed, or if the Commission on its own motion believes that a formal hearing is required, further notice of such hearing will be duly given.

for.

Under the procedure herein provided for, unless otherwise advised, it will be unnecessary for Applicant to appear or be represented at the hearing.

KENNETH F. PLUMB,
Secretary.

[FR Doc.76-20776 Filed 7-16-76;8:45 am]

[Docket No. CP76-401]

NATURAL GAS PIPELINE COMPANY OF AMERICA

Application

JULY 13, 1976.

Take notice that on June 21, 1976, Natural Gas Pipeline Company of America (Applicant), 122 South Michigan Avenue, Chicago, Illinois 60603, filed in Docket No. CP76-401 an application pursuant to section 7(b) of the Natural Gas Act for permission and approval to abandon certain gas purchase facilities in the *Cavasso Creek area, Aransas County,* Texas, all as more fully set forth in the application which is on file with the Commission and open to public inspection.

Applicant proposes to abandon in place approximately 2.35 miles of 4-inch pipeline and a 3-inch tap which facilities were installed to receive gas purchased from Pennzoil Producing Company (Pennzoil), formerly Union Producing Company. Applicant states that production from the acreage dedicated under the gas purchase contract terminated in April 1971 and that Pennzoil and Applicant by agreement, dated August 7, 1972, agreed to terminate the subject gas purchase contract. It is indicated that Pennzoil received permission and approval to abandon the sale to Applicant by Commission order, issued August 1, 1973, in Docket No. CI73-179. Accordingly, Applicant proposes to abandon its related gas purchase facilities.

Any person desiring to be heard or to make any protest with reference to said application should on or before July 29, 1976, file with the Federal Power Commission, Washington, D.C. 20426, a petition to intervene or a protest in accordance with the requirements of the Commission's rules of practice and procedure (18 CFR 1.8 or 1.10) and the regulations under the Natural Gas Act (18 CFR 157.10). All protests filed with the Commission will be considered by it in determining the appropriate action to be taken but will not serve to make the protestants parties to the proceeding. Any person wishing to become a party to a proceeding or to participate as a party in any hearing therein must file a petition

to intervene in accordance with the Commission's rules.

Take further notice that, pursuant to the authority contained in and subject to the jurisdiction conferred upon the Federal Power Commission by sections 7 and 15 of the Natural Gas Act and the Commission's rules of practice and procedure, a hearing will be held without further notice before the Commission on this application if no petition to intervene is filed within the time required herein, if the Commission on its own review of the matter finds that permission and approval for the proposed abandonment are required by the public convenience and necessity. If a petition for leave to intervene is timely filed, or if the Commission on its own motion believes that a formal hearing is required, further notice of such hearing will be duly given.

Under the procedure herein provided for, unless otherwise advised, it will be unnecessary for Applicant to appear or be represented at the hearing.

KENNETH F. PLUMB,
Secretary.

[FR Doc.76-20775 Filed 7-16-76;8:45 am]

[Docket Nos. E-9136, E-9140]

NEW ENGLAND POWER CO.

Order Approving Settlement Agreement

JULY 12, 1976.

On February 27, 1976, Presiding Administrative Law Judge Stephen L. Grossman, certified to the Commission a settlement agreement between New England Power Company (NEPCO) and all parties to this proceeding except the Division of Public Utilities and Carriers of the State of Rhode Island, and the Department of the Attorney General for the State of Rhode Island.[1] The Attorney General who appears in his own behalf and as counsel for the Division of Public Utilities and Carriers of the State of Rhode Island, objects to the settlement in a two page pleading styled as "Initial Comments * * *" on the grounds that at the time the agreement was submitted to the Administrative Law Judge there was insufficient time to analyze the data underlying the settlement, that the settlement denied the State of Rhode Island's opporunity for cross examination of NEPCO's witnesses and that if the Attorney General and the Division did acquiesce in the settlement they might prejudice their ability to investigate the cost of purchased power to Narragansett Electric Company, NEPCO's Rhode Island affiliate. Staff in its comments on the objections of Rhode Island points out that the Rhode Island Department of Attorney General has participated in the settlement negotiations since their inception. Staff asks that if Rhode Island, after having the opportunity to evaluate the settlement more fully, believes the settlement not in the public interest then the Commission should permit Rhode Island to file evidence which would support its position. We conclude that Rhode Island has had ample time to evaluate the settlement and has not provided any cogent reasons for the Commission to reject the settlement. We cannot agree that the settlement in any way affects Rhode Island's authority under its own statutes to investigate any rate which is subject to its jurisdiction. After consideration of Rhode Island's objections we will approve the settlement.

The settlement agreement relates to matters before the Commission in Docket Nos. E-9136 and E-9140. Docket No. E-9140 relates to NEPCO's R-9 rate increase filing which became effective subject to refund on June 1, 1975 and to its fuel clause filing made in compliance with the Commission's Order No. 517, which became effective subject to refund on August 2, 1975. Docket No. E-9136 relates to the generation and transmission credits to be allowed to NEPCO's affiliate, the Narragansett Electric Company, (Narragansett) on Narragansett's purchased power bill from NEPCO. These credits are given in exchange for NEPCO's use of Narragansett's generation and transmission facilities. The amount of the credits for the 1975 test period affects NEPCO's cost of service in setting the appropriate R-9 rate level.

The settlement agreement provides for filing of rate schedule revisions attached to it as appendix A to be effective as of June 1, 1975. The agreement requires that NEPCO extend until January 1, 1977 the moratorium on increases in its 5¢ per kw charge for services in connection with delivery at other than standard delivery points. Without the agreement the charge would have been increased as of March 1, 1976, to 46¢ per kw.

Article I of the agreement requires the filing of the rate schedule upon approval by the Commission of the settlement and for refund for any amount collected for service from June 1, 1975 in excess of the amounts provided for in the rate schedule. Article II describes the moratorium mentioned above in detail. Article IV states that "it is agreed, for settlement purposes only, that the settlement rates are supported by the summary 1975 test year cost of service prepared by the Commission Staff and attached * * * as Appendix B." Appendix B." Appendix B[2] of the settlement agreement is attached to this order as Appendix A[2] and includes in addition to the cost of service summary provided by Staff, a description of the capitalization and rate of return provided under the terms of the agreement.

The Commission finds: Approval as hereinafter ordered of the settlement in this proceeding on the basis of the agreement dated February 25, 1976, (Exhibit 41 herein) is just and reasonable and in the public interest in carrying out the provisions of the Federal Power Act, subject to the conditions set forth below.

The Commission orders: (A) The settlement agreement filed herein (Exhibit 41) is incorporated herein by reference, approved and made effective as hereinafter ordered and conditioned.

(B) NEPCO shall comply with each of the provisions of the settlement agreement and with the terms and conditions of this order.

(C) This order is without prejudice to any findings or orders which have been made or which will hereafter be made by the Commission, and is without prejudice to any claims or contentions which may be made by the Commission, its Staff, or any party or person affected by this order, in any proceeding now pending or hereafter instituted by or against NEPCO or any other person or party.

(D) Within 30 days of the date of issuance of this order NEPCO shall file revised tariff sheets in compliance with the settlement agreement and the terms and conditions of this order.

(E) The Secretary shall cause prompt publication of this order in the FEDERAL REGISTER.

By the Commission.

KENNETH F. PLUMB,
Secretary.

[FR Doc.76-20764 Filed 7-16-76;8:45 am]

[Docket No. E-9554]

NORTHERN ELECTRIC COOPERATIVE ASSOCIATION

Order Authorizing Transmission of Electric Energy to Canada and Accepting Export Rate Schedule for Filing

JULY 12, 1976.

Northern Electric Cooperative Association (NEC) filed an application on April 9, 1976, in Docket No. E-9554 for an order, pursuant to section 202(e) of the Federal Power Act, authorizing the transmission of electric energy from the United States to Canada in an amount not to exceed 500,000 Kwh annually at an aggregate rate of transmission not to exceed 200 Kw. The energy will be sold and delivered by NEC to Canadian Sandpoint Power Association, Province of Ontario, Canada, in accordance with the terms and conditions and at the rates set forth and included in the contract for electric service dated January 22, 1976.

The contract and rate schedule were included as part of the application and will be collectively treated as one initial export rate schedule tendered for filing by NEC pursuant to Part 35 of the Commission's Regulations under the Act (18 CFR 35.0 et seq.), particluarly §§ 35.12 and 35.20 thereof. In its application NEC also seeks permission, pursuant to Executive Order No. 10485, dated September 3, 1953, to construct, operate, maintain and connect at the international border between the United States and Canada cer-

[1] The other parties to the proceeding besides NEPCO are Staff; The NEPCO Customer Rate Committee and The Electric Departments and Plants of the Massachusetts Towns and Cities of Ashburnham, Boylston, Danvers, Georgetown, Groton, Hingham, Holden, Hudson, Hull, Ipswich, Littleton, Mansfield, Marblehead, Merrimac, Middleton, North Attleboro, Paxton, Peabody, Princeton, Shrewsbury, Sterling, Templeton, Wakefield and West Boylston, together with Littleton, New Hampshire and the Manchester Electric Company and The New Hampshire Electric Cooperative, Inc.; the Rhode Island Consumers Council.

[2] Appendices A and B filed as part of the original document.

tain electric transmission facilities hereinafter described for the purpose of accomplishing the proposed exportation of energy.

The electric energy proposed to be exported by NEC will be transmitted by it from St. Louis County, Minnesota to the Canadian Sandpoint Power Association in Ontario, Canada, by means of two 14,400 volt, 60 cycle lines identified on the map attached hereto and identified as "Exhibit A."

The electric energy purchased and received by Canadian Sandpoint Power Association from NEC will be used to serve a potential of 37 consumers.

The contract and rate schedule referred to above are designated in the Commission's files as NEC's Export Rate Schedule FPC No. 1. The contract is for an initial period of three years from the start of the first billing period and thereafter until terminated by either party giving 12 months' notice in writing to the other party. The rate schedule specifies a rate of 2.55 cents per kilowatt hour delivered at the metering point on the United States side of the border as described in the contract. The rate schedule is based upon Canadian Sandpoint Power Association maintaining a monthly load factor of not less than 50 percent. In the event the monthly load factor is less than 50% the Canadian Sandpoint Power Association will pay 2.45 per Kw for each Kw in excess of the demand which would produce 50% load factor based on Kwh usage. In accepting NEC's Export Rate Schedule FPC No. 1 for filing hereinafter, we are directing that it shall take effect as of the date of issuance of this order.

Since the construction and operation of the proposed facilities will create only minor short-term effects on the environment, this is not a major Federal action requiring the filing of an environmental impact statement.

Written notice of the application has been given to the Public Service Commission of Minnesota and to the Governor of that State. Notice of the application has also been given by publication in the FEDERAL REGISTER on April 27, 1976, (41 FR 17623), stating that any person desiring to be heard or to make any protest with reference to the application should on or before May 10, 1976 file with the Federal Power Commission, Washington, D.C. 20426, petitions to intervene or protests in accordance with the Commission's rules of practice and procedure (18 CFR 1.8 or 1.10). No petition or protest or request to be heard in opposition to the granting of the application has been received.

The Commission finds: (1) The proposed transmission of electric energy from the United States to Canada, as limited herein and as hereinafter authorized, will not impair the sufficiency of electric supply within the United States and will not impede or tend to impede the coordination in the public interest of facilities subject to the jurisdiction of the Commission.

(2) The period of public notice given in this matter is reasonable.

(3) It is necessary and appropriate for purposes of Part 35 of the Commission's regulations under the Federal Power Act that NEC's Export Rate Schedule No. 1 be accepted for filing to become effective as of the date of issuance of this order, as hereinafter provided.

(4) Acceptance for filing of NEC's Export Rate Schedule FPC No. 1 and approval of NEC's application filed in Docket No. E-9554 will not constitute major Federal actions significantly affecting the quality of the human environment and, therefore, no detailed environmental impact statement is required with respect to such acceptance and approval.

The Commission orders: (A) NEC is hereby authorized to transmit electric energy from the United States to Canada in accordance with the terms and conditions set forth in the application, as supplemented, and subject to the provisions of this order.

(B) The electric energy which NEC is hereby authorized to transmit from the United States to Canada shall be in an amount not to exceed 150,000 Kwh per year at a transmission rate not to exceed 200 Kw; the energy to be transmitted over the facilities specified in the Permit signed by the Chairman of the Commission on July 12, 1976, Docket No. E-9554.

(C) NEC's Export Rate Schedule FPC No. 1 is hereby accepted for filing and shall become effective as of the date of issuance of this order.

(D) The authorization herein granted may be modified from time to time or terminated by further order of the Commission, but in no event shall such authorization extend beyond the date of termination or expiration of the Permit signed by the Chairman of the Commission referred to in Paragraph (B) above.

(E) NEC shall conduct all operations pursuant to the authorization herein granted in accordance with the provisions of the Federal Power Act and pertinent rules, regulations or orders issued by the Commission.

(F) NEC shall provide for the installation and maintenance of adequate metering equipment to measure the flow of all electric energy transmitted from the United States to Canada pursuant to the authority herein granted; shall make, keep and preserve full and complete records with respect to the movement of such energy; and shall furnish to the Commission, with respect to such transmission of energy, a report, in triplicate, annually on or before February 15, showing the Kwh of energy delivered, the maximum Kw rate of transmission, and the consideration received therefor during each month of the preceding calendar year.

(G) This authorization to transmit electric energy from the United States to Canada shall not be transferable or assignable, but shall continue in effect temporarily for a reasonable time thereafter in the event of the involuntary transfer of facilities used thereunder by operation of law (including such transfers to receivers, trustees, or purchasers under foreclosure or judicial sale), pending the making of an application for permanent authorization and decision thereon, provided notice is promptly given in writing to the Commission accompanied by a statement that the physical facts relating to sufficiency of supply, rates, and nature of use remain substantially the same as before the transfer.

(H) This authorization shall be without prejudice to the authority of any State or State regulatory commission for the exercise of any lawful authority vested in the State or State regulatory commission over NEC.

(I) This authorization is without prejudice to the authority of this Commission, or any other regulatory body, with respect to rates, service, accounts, valuation, estimates or determinations of cost, or any other matter whatsoever now pending or which may come before this Commission, or any other regulatory body, and nothing herein shall be construed as an acquiescence by this Commission in any estimate or determination of cost or any valuation of property claimed or asserted.

(J) Acceptance of the rate schedule as referred to in Paragraph (C) above is without prejudice to any findings or orders which have been or may hereafter be made by this Commission in this or any proceeding now pending or hereafter instituted by or against NEC.

(K) Nothing contained in this order shall be construed as constituting approval by this Commission of any service, rate, charge, classification or any rule, regulation, contract or practice affecting such service or rate provided for in the rate schedule referred to in Paragraph (C) above; nor shall this order be deemed as recognizing any claimed contractual right or obligation affecting or relating to such service or rate.

(L) Concurrently with the issuance of this order, the Permit signed by the Chairman of the Commission, referred to in Paragraph (B) above, shall be issued and a copy thereof transmitted by the Secretary to NEC.

By the Commission.

KENNETH F. PLUMB,
Secretary.

[FR Doc.76-20703 Filed 7-16-76;8:45 am]

[Docket No. G-10632]

NORTHERN ILLINOIS GAS CO.

Application

JULY 9, 1976.

Take notice that on June 18, 1976, Northern Illinois Gas Company (NI-Gas), P.O. Box 190, Aurora, Illinois 60507, filed in Docket No. G-10632 an application[1] pursuant to section 1(c) of

[1] The pleading is styled "Petition of Northern Illinois Gas Company to Intervene (in Docket No. CP76-390) and Application for Continuing Exemption under Section 1(c) of the Natural Gas Act (in Docket No. G-10623)".

the Natural Gas Act for a declaration of NI-Gas' continuing exemption from the provisions of the Natural Gas Act notwithstanding its participation in a scheme for the rescheduling of deliveries of natural gas for which Natural Gas Pipeline Company of America (Natural) and Northern Natural Gas Company (Northern) seek authorization in Docket Nos. CP76-390 and CP76-355, respectively, all as more fully set forth in the application which is on file with the Commission and open to public inspection.

NI-Gas notes that in Docket No. CP76-390 Natural has filed an application pursuant to section 7(c) of the Natural Gas Act for a certificate of public convenience and necessity authorizing the exchange of gas with Northern and a rescheduling of deliveries to NI-Gas. NI-Gas states that under the terms of the rescheduling agreement between Natural and NI-Gas, dated March 1, 1976, during the periods beginning October 1, 1976, and ending March 31, 1977, and October 1, 1977, and ending March 31, 1978 (Winter Periods), Natural has the right to request NI-Gas to permit reduction of deliveries to NI-Gas by up to a daily maximum of 60,000 Mcf unless the parties agree, on any given day, to increase that daily maximum quantity, and that NI-Gas would accede to such request to the extent that, in its judgment, operating conditions on the NI-Gas system permit. Further, it is stated that to the extent deliveries to NI-Gas are reduced during the preceding Winter Periods, Natural would deliver thermally equivalent volumes during the period beginning April 1 through September 30, 1977, and April 1 through September 30, 1978 (Summer Periods), and that these equivalent volumes would not be subject to curtailment. NI-Gas states that it is advised that the proposed rescheduling would give Natural added flexibility necessary to meet its obligations under the seasonal exchange agreement between Natural and Northern and that since the deliveries during the Summer Periods would replace volumes normally delivered to NI-Gas by Natural in the Winter Periods, there would be no net increase in deliveries by Natural to NI-Gas due to the proposed rescheduling.

NI-Gas indicates that the rescheduling agreement between it and Natural is for a limited term ending October 31, 1978, and is intended only as a temporary arrangement to assist Natural to meet its obligation to Northern. It is further stated that all of the natural gas delivered to NI-Gas would be received within the State of Illinois and would be ultimately consumed within the State of Illinois. Accordingly, NI-Gas requests that the Commission declare that NI-Gas would continue to be exempt from the provisions of the Natural Gas Act notwithstanding its participation in the scheme for the rescheduling of deliveries.

Any person desiring to be heard or to make any protest with reference to said application should on or before July 28, 1976, file with the Federal Power Commission, Washington, D.C. 20426, a petition to intervene or a protest in accordance with the requirements of the Commission's rules of practice and procedure (18 CFR 1.8 or 1.10). All protests filed with the Commission will be considered by it in determining the appropriate action to be taken but will not serve to make the protestants parties to the proceeding. Any person wishing to become a party to a proceeding or to participate as a party in any hearing therein must file a petition to intervene in accordance with the Commission's rules.

KENNETH F. PLUMB,
Secretary.

[FR Doc.76-20787 Filed 7-16-76;8:45 am]

[Docket No. RP76-89]

NORTHERN NATURAL GAS CO.

Order Granting Interventions

JULY 12, 1976.

On April 22, 1976, Northern Natural Gas Company tendered for filing proposed changes in its F.P.C. Gas Tariff, Third Revised Volume No. 1 and Original Volume No. 2. The proposed changes would increase revenues from jurisdictional sales by $71,723,077 annually, based on sales volumes and costs for the twelve months ended December 31, 1975, as adjusted for nine months of known and measurable changes. Notice of the filing was issued on April 30, 1976 with protests and petitions to intervene due on or before May 17, 1976.

In addition to the interventions which were granted in our order issued May 26, 1976 in this proceeding, petitions to intervene were received from the parties listed in the Appendix below.

Upon consideration of these timely and late petitions to intervene, the Commission finds that good cause exists to grant the petitions.

The Commission finds: Participation by the petitioners listed in the Appendix hereto may be in the public interest and good cause exists for permitting such interventions.

The Commission orders: (A) The petitioners listed on the appendix hereto are hereby permitted to intervene in this proceeding, subject to the rules and regulations of the Commission: *Provided, however,* That the participation of such intervenors shall be limited to matters affecting rights and interests specifically set forth in the petitions to intervene: *Provided, further,* That admission of such intervenors shall not be construed as recognition by the Commission that they might be aggrieved because of any order or orders issued by the Commission in this proceeding.

(B) The interventions granted herein shall not be the basis for delaying or deferring any procedural scheduled heretofore established for the orderly and expeditious disposition of this proceeding.

(C) The Secretary shall cause prompt publication of this order to be made in the FEDERAL REGISTER.

By the Commission.

KENNETH F. PLUMB,
Secretary.

Timely Petitions To Intervene:	*Date filed*
North Central Public Service Corporation	May 13, 1976
Wisconsin Southern Gas Company, Inc	May 27, 1976
Michigan Wisconsin Pipe Line Company	June 3, 1976
Illinois Commerce Commission	June 7, 1976
Michigan Power Company	June 8, 1976
Wisconsin Gas Company	June 9, 1976

[Docket No. E-9148]

NORTHERN STATES POWER CO.

Compliance Filing

JULY 8, 1976.

Take notice that on June 11, 1976, Northern States Power Company (Minnesota) tendered for filing its Fifth Revised Schedule A to the company's Firm Power Service Resale Agreements. The Company states that this filing is in compliance with the Commission's order of May 27, 1976, approving the settlement proposal in this docket, and is in the form set out in Appendix A of the settlement agreement. The company requests an effective date of June 1, 1975.

The company states that it has mailed copies of this filing to its total requirements wholesale customers.

Any person desiring to be heard or to protest said filing should file a petition to intervene or protest with the Federal Power Commission, 825 North Capitol Street, NE., Washington, D.C. 20426, in accordance with §§ 1.8 and 1.10 of the Commission's rules of practice and procedure (18 CFR 1.8, 1.10). All such petitions or protests should be filed on or before July 16, 1976. Protests will be considered by the Commission in determining the appropriate action to be taken, but will not sreve to make protestants parties to the proceeding. Any person wishing to become a party must file a petition to intervene. Copies of this tender are on file with the Commission and are available for public inspection.

KENNETH F. PLUMB,
Secretary.

[FR Doc.76-20781 Filed 7-16-76;8:45 am]

[Docket No. RP75-102]

PANHANDLE EASTERN PIPE LINE CO.

Certification of Settlement Agreement

JULY 9, 1976.

Take notice that on June 30, 1976 Presiding Administrative Law Judge Samuel Kanell certified to the Commission a settlement agreement together with the record in the above referenced proceeding. In his certification Judge Kanell noted the opposition of Commission Staff to some of the costs included

in the settlement cost of service. These costs are Panhandle's costs related to the Gas Artic Northwest Project and the Northern Border Pipe Line Project. Judge Kanell also noted the agreement of the parties to file with the Commission any comments deemed appropriate within two weeks of the time that the Commission gives notice of the certification of the settlement agreement.

The Commission hereby sets July 23, 1976 as the date by which comments on the disputed issue are to be filed. Any reply comments shall be filed as part of the comments to the entire settlement agreement, the date for which is established below.

Any person desiring to be heard or to protest said settlement agreement should file comments with the Federal Power Commission, 825 North Capitol Street, NE., Washington, D.C. 20426, on or before August 6, 1976. Comments will be considered by the Commission in determining the appropriate action to be taken. Copies of this agreement are on file with the Commission and are available for public inspection.

KENNETH F. PLUMB,
Secretary.

[FR Doc.76-20760 Filed 7-16-76;8:45 am]

[Docket No. RP73-49, (PGA76-5)]

SOUTH GEORGIA NATURAL GAS CO.

Revision to Tariff

JULY 12, 1976.

Take notice that on May 24, 1976, South Georgia Natural Gas Company (South Georgia) tendered for filing Twentieth Revised Sheet No. 3A to Original Volume No. 1 of its FPC Gas Tariff.

South Georgia states that the above sheet represents a rate change under its PGA Clause for the purpose of tracking a rate increase filing made by Southern Natural Gas Company on May 14, 1976. The instant filing will increase South Georgia's jurisdictional rates by $644,654. An effective date of July 1, 1976 is proposed.

Any person desiring to be heard or to protest said application should file a petition to intervene or protest with the Federal Power Commission, 825 North Capitol Street, NE., Washington, D.C. 20426, in accordance with §§ 1.8 and 1.10 of the Commission's rules of practice and procedure (18 CFR 1.8, 1.10). All such petitions or protests should be filed on or before July 20, 1976. Protests will be considered by the Commission in determining the appropriate action to be taken, but will not serve to make protestants parties to the proceeding. Any person wishing to become a party must file a petition to intervene. Copies of this application are on file with the Commission and are available for public inspection.

KENNETH F. PLUMB,
Secretary.

[FR Doc.76-20785 Filed 7-16-76;8:45 am]

[Docket No. ER76-775]

SOUTHERN CALIFORNIA EDISON CO.

Filing of Initial Rate Schedule and Request for Waiver

JULY 13, 1976.

Take notice that on July 6, 1976, Southern California Edison Company (Edison) tendered for filing an integration and transmission service agreement with the City of Riverside providing for the transmission by Edison on an interruptible basis of power purchased by Riverside from Nevada Power Company on a non-firm basis. Edison will charge Riverside for transmission, dispatching, and scheduling services, and for losses between the Point of Attachment to Nevada Power and Point of Delivery to Riverside.

Edison and Riverside request that service be initiated as soon as possible under this Agreement, and for that reason Edison requests that the notice provisions of the Commission's regulations be waived and the filing be permitted to become effective at the time of acceptance for filing but in no event later than 30 days thereafter.

Copies of this filing were served upon the City of Riverside, California, and the Public Utilities Commission of the State of California.

Any person desiring to be heard or to protest this filing should file a petition to intervene or protest with the Federal Power Commission, 825 North Capitol Street, NE., Washington, D.C. 20426, in accordance with §§ 1.8 and 1.10 of the Commission's rules of practice and procedure (18 CFR 1.8, 1.10). All such petitions or protests should be filed on or before July 28, 1976. Protests will be considered by the Commission in determining the appropriate action to be taken, but will not serve to make protestants parties to the proceeding. Any person wishing to become a party must file a petition to intervene. Copies of this application are on file with the Commission and are available for public inspection.

KENNETH F. PLUMB,
Secretary.

[FR Doc.76-20774 Filed 7-16-76;8:45 am]

[Docket No. CP76-395]

TEXAS GAS TRANSMISSION CORP.

Application

JULY 9, 1976.

Take notice that on June 14, 1976, Texas Gas Transmission Corporation (Applicant), 3800 Frederica Street, Owensboro, Kentucky 42301, filed in Docket No. CP76-395 an application pursuant to section 7 of the Natural Gas Act, as implemented by § 157.7(g) of the Regulations thereunder (18 CFR 157.7 (g)), for a certificate of public convenience and necessity authorizing the construction and for permission and approval for the abandonment, for a 12-month period commencing November 4, 1976, and operation of field gas compression and related metering and appurtenant facilities, all as more fully set forth in the application which is one file with the Commission and open to public inspection.

The stated purpose of this budget-type application is to augment Applicant's ability to act with reasonable dispatch in the construction and abandonment of facilities which will not result in changing Applicant's system saleable capacity or service from that authorized prior to the filing of the instant application.

Applicant states that the total cost of the proposed construction and abandonment would not exceed $3,000,000, and the cost of any single project would not exceed $500,000. Applicant states further that these costs would be financed with funds on hand.

Any person desiring to be heard or to make any protest with reference to said application should on or before July 27, 1976, file with the Federal Power Commission, Washington, D.C. 20426, a petition to intervene or a protest in accordance with the requirements of the Commission's rules of practice and procedure (18 CFR 1.8 or 1.10) and the regulations under the Natural Gas Act (18 CFR 157.10). All protests filed with the Commission will be considered by it in determining the appropriate action to be taken but will not serve to make the protestants parties to the proceeding. Any person wishing to become a party to a proceeding or to participate as a party in any hearing therein must file a petition to intervene in accordance with the Commission's rules.

Take further notice that, pursuant to the authority contained in and subject to the jurisdiction conferred upon the Federal Power Commission by sections 7 and 15 of the Natural Gas Act and the Commission's rules of practice and procedure, a hearing will be held without further notice before the Commission on this application if no petition to intervene is filed within the time required herein, if the Commission on its own review of the matter finds that a grant of the certificate and permission and approval for the proposed abandonment are required by the public convenience and necessity. If a petition for leave to intervene is timely filed, or if the Commission on its own motion believes that a formal hearing is required, further notice of such hearing will be duly given.

Under the procedure herein provided for, unless otherwise advised, it will be unnecessary for Applicant to appear or be represented at the hearing.

KENNETH F. PLUMB,
Secretary.

[FR Doc.76-20784 Filed 7-16-76;8:45 am]

[Docket No. ER76-654]

UTAH POWER & LIGHT CO.

Order Granting Late Intervention and Denying Motion To Reject

JULY 12, 1976.

On June 7, 1976, the Navajo Tribal Utility Authority (Navajo) tendered for

filing a protest and petition to intervene in the above-captioned proceeding, including a motion to either reject or suspend for five months the rates proposed in this proceeding. For the reasons hereinafter stated, the Commission shall grant Navajo's petition to intervene and deny the motion to reject or suspend for five months.

On April 29, 1976, the Utah Power & Light Company (Utah) tendered for filing proposed changes in its FPC Electric Service Tariff, Original Volume No. 1. Public notice of Utah's filing was issued May 6, 1976, with all protests, comments or petitions to intervene due on or before May 21, 1976. By order issued May 28, 1976, the Commission accepted the proposed rates for filing, suspended their effectiveness for two months, and granted several petitions to intervene.

Navajo's filing of June 7, 1976, argues that the increases requested by Utah (1) are unreasonable on their face and must be rejected, (2) should be suspended no less than five months if allowed to become effective, and (3) are tainted by the inclusion of data reflecting amounts attributable to construction work in progress (CWIP). The Commission believes that Navajo's petition to intervene should be granted but that Navajo's motion to reject or suspend the filing for five months should be denied.

Navajo's allegation as to the unreasonableness of the rate increase is a matter for further development in the evidentiary hearing established in this proceeding, and does not constitute good cause for rejection of Utah's filing. With respect to the length of the suspension period, our decision to suspend for two months was based on our review of Utah's filing and the testimony and exhibits in support thereof. Based on such review we exercised our independent judgment in light of our expertise in this area and concluded that a two month suspension was sufficient to protect the public interest and the parties to this proceeding. Upon further review, we reaffirm our prior order and conclude that the two month suspension was proper. The period of suspension is a matter of discretion and not subject to judicial review. "Municipal Light Boards v. F.P.C.," 450 F. 2d 1341, 1352 (1971).

We further find that although Utah tendered various data reflecting the inclusion of CWIP in rate base, the proposed rates were in fact based upon data which excluded CWIP from consideration. The fact that Utah tendered additional data reflecting the inclusion of CWIP in rate base does not taint the entire filing as suggested by Navajo, but rather raises only questions of the relevancy to be attached such data in light of our current policy of excluding CWIP from rate base. Navajo's motion to reject or suspend for five months the filed rates will therefore be denied.

The Commission finds: (1) Good cause exists to allow the late intervention of Navajo in the instant proceeding.

(2) Good cause does not exist to grant Navajo's motion to either reject or suspend for five months the filed rates.

The Commission orders: (A) The above-named petitioner is hereby permitted to intervene in these proceedings subject to the rules and regulations of the Commission: Provided, however, That participation of such intervenor shall be limited to matters affecting asserted rights and interests as specifically set forth in the petition to intervene; And Provided, further, That the admission of such intervenor shall not be construed as recognition by the Commission that it might be aggrieved because of any order or orders of the Commission entered in this proceeding.

(B) The intervention granted herein shall not be the basis for delaying or deferring any procedural schedules heretofore established for the orderly and expeditious disposition of this proceeding.

(C) Navajo's motion to reject or suspend for five months the filed rates is hereby denied.

(D) The Secretary shall cause prompt publication of this order in the FEDERAL REGISTER.

By the Commission.

KENNETH F. PLUMB,
Secretary.

[FR Doc.76-20773 Filed 7-16-76;8:45 am]

[Docket No. ID-1794]

WILLIAM B ELLIS

Application

JULY 13, 1976.

Take notice that on June 24, 1976, William B. Ellis (Applicant) filed an application with the Federal Power Commission. Pursuant to section 305(b) of the Federal Power Act, Applicant seeks authority to hold the following positions:

Exec. Vice President and Director, The Connecticut Light and Power Company, Public Utility.

Exec. Vice President and Director, The Hartfor Electric Light Company, Public Utility.

Exec. Vice President and Director, Western Massachusetts Electric Company, Public Utility.

Exec. Vice President and Director, Holyoke Water Power Company, Public Utility.

Exec. Vice President and Director, Holyoke Power and Electric Company, Public Utility.

Director, Connecticut Yankee Atomic Power Company, Public Utility.

The Connecticut Light and Power Company, a Connecticut corporation engaged principally in the production, purchase, transmission, distribution and sale of electricity, at wholesale and retail, and the production, purchase, distribution and sale of gas at retail within the State of Connecticut.

The Hartford Electric Light Company, a Connecticut corporation engaged principally in the production, purchase, transmission, distribution and sale of electricity, at wholesale and retail, and the production, purchase, distribution and sale of gas at retail within the State of Connecticut.

Western Massachusetts Electric Company a Massachusetts corporation engaged principally in the production, purchase, transmission, distribution and sale of electricity at wholesale and retail in a substantial portion of western Massachusetts.

Holyoke Water Power Company, a Massachusetts corporation engaged principally in the manufacture, purchase, transmission, distribution and sale of electricity to industrial, municipal and wholesale customers in the cities of Holyoke and Chicopee and the Town of South Hadley in western Massachusetts.

Holyoke Power and Electric Company, a wholly-owned subsidiary of Holyoke Water Power which conducts certain of that Company's electric operations.

Connecticut Yankee Atomic Power Company, a Connecticut corporation owning and operating a nuclear electric generating plant at Haddam Neck, Connecticut.

Any person desiring to be heard or to make any protest with reference to said application should on or before August 9, 1976, file with the Federal Power Commission, Washington, D.C. 20426, petitions to intervene or protests in accordance with the Commission's rules of practice and procedure (18 CFR 1.8 or 1.10). All protests filed with the Commission will be considered by it in determining the appropriate action to be taken but will not serve to make the protestants parties to the proceeding. Persons wishing to become parties to a proceeding or to participate as a party in any hearing therein must file petitions to intervene in accordance with the Commission's Rules. The application is on file with the Commission and available for public inspection.

KENNETH F. PLUMB,
Secretary.

[FR Doc.76-20769 Filed 7-16-76;8:45 am]

NATIONAL FOUNDATION ON THE ARTS AND THE HUMANITIES

National Endowment for the Humanities

ADVISORY COMMITTEE FELLOWSHIPS PANEL

Meeting

JUNE 29, 1976.

Pursuant to the provisions of the Federal Advisory Committee Act (Pub. L. 92-463) notice is hereby given that a meeting of the Fellowships Panel will be held at 806 15th Street, NW., room 314, Washington, D.C. on August 2, 19, 23, and 27, 1976, from 9 a.m. to 5:30 p.m.

The purpose of the meeting is to review Independent Fellowship applications submitted to the National Endowment for the Humanities for 1977-78 fellowship grants.

Because the proposed meeting will consider financial information and personnel and similar files the disclosure of which would constitute a clearly unwarranted invasion of personal privacy, pursuant to authority granted me by the Chairman's Delegation of Authority to

Close Advisory Committee Meetings, dated August 13, 1973, I have determined that the meeting would fall within exemptions (4) and (6) of 5 U.S.C. 552(b) and that it is essential to close the meeting to protect the free exchange of internal views and to avoid interference with operation of the Committee.

It is suggested that those desiring more specific information contact the Advisory Committee Management Officer, Mr. John W. Jordan, 806 15th Street, NW., Washington, D.C., 20506, or call area code 202-382-2931.

JOHN W. JORDAN,
Advisory Committee Management Officer.

[FR Doc.76-20692 Filed 7-16-76;8:45 am]

NATIONAL SCIENCE FOUNDATION

ADVISORY GROUP ON ANTICIPATED ADVANCES IN SCIENCE AND TECHNOLOGY

Meeting

In accordance with the Federal Advisory Committee Act, Pub. L. 92-463, the National Science Foundation announces the following meeting:

Name: Advisory Group on Anticipated Advances in Science and Technology.
Date: August 5, 1976.
Time: 9 a.m. to 4 p.m.
Place: International Meeting Room, Hyatt House (formerly International Inn), International Airport, Los Angeles, California 90045.
Type of meeting: Open.
Contact person: Mr. William Montgomery, Special Assistant to the Director of Operations, National Science Foundation, Washington, DC 20550, telephone 202/632-4061. Anyone planning to attend the meeting should contact Mr. Montgomery by July 26, 1976.
Summary minutes: May be obtained from the Committee Management Coordination Staff, Div. of Personnel & Management, Rm. 212 National Science Foundation, Washington, DC 20550.
Purpose of advisory group: To provide advice on developments that may take place in science and engineering and examine the national policy implications of these developments. This group will consider these subjects in a manner which will facilitate the planning for the new Office of Science and Technology Policy.
Agenda:
0900 Convene Chairman's remarks.
0910 Review of Issues—Operation of OSTP, Energy, Regulation—Health & Safety, International S&T, Health of Science.
1200 Lunch.
1300 Continue issue review, Food, Resources, Climate, Oceans, Biomedical R&D.
1600 Adjourn.

M. REBECCA WINKLER,
Acting Committee Management Officer.

JULY 14, 1976.

[FR Doc.76-20742 Filed 7-16-76;8:45 am]

ADVISORY GROUP ON CONTRIBUTIONS OF TECHNOLOGY TO ECONOMIC STRENGTH

Meeting

In accordance with the Federal Advisory Committee Act, Pub. L. 92-463, the National Science Foundation announces the following meeting:

Name: Advisory Group on Contributions of Technology to Economic Strength.
Date: August 6, 1976.
Time: 9 a.m. to 4 p.m.
Place: International Meeting Room, Hyatt House (formerly International Inn), International Airport, Los Angeles, California 90045.
Type of meeting: Open.
Contact person: Mr. William Montgomery, Special Assistant to the Director of Operations, National Science Foundation, Washington, DC 20550, telephone 202/632-4061. Anyone planning to attend the meeting should contact Mr. Montgomery by July 26, 1976.
Summary minutes: May be obtained from the Committee Management Coordination Staff, Div. of Personnel & Management, Rm 212, National Science Foundation, Washington, DC 20550.
Purpose of advisory group: To provide issues that may lead to policy supporting an improved utilization of technology and fostering economic strength. This group will consider these subjects in a manner which will facilitate the planning for the new Office of Science and Technology Policy.
Agenda:
0900 Convene. Chairman's remarks.
0910 Review of Issues—Operation of OSTP, Energy, Regulation—Health & Safety, International S&T, Health of Science.
1200 Lunch.
1300 Continue issue review, Economic effects, Space, Information, Civil R&D, Vulnerability of complex systems.
1600 Adjourn.

M. REBECCA WINKLER,
Acting Committee Management Officer.

JULY 14, 1976.

[FR Doc.76-20746 Filed 7-16-76;8:45 am]

INTERNATIONAL DECADE OF OCEAN EXPLORATION PROPOSAL REVIEW PANEL

Meeting

In accordance with the Federal Advisory Committee Act, Pub. L. 92-463, the National Science Foundation announces the following meeting:

Name: International Decade of Ocean Exploration Proposal Review Panel.
Date and time: August 18-20, 1976—9 a.m. to 5 p.m. each day.
Place: Rm. 643, National Science Foundation, 1800 G Street, NW., Washington, D.C.
Type of meeting: Closed.
Contact person: Mr. Feenan D. Jennings, Head, Office for the International Decade of Ocean Exploration, Room 605, National Science Foundation, Washington, D.C. 20550, telephone (202) 632-7356.
Purpose of panel: To provide advice and recommendations concerning support of research by programs of the Office for the International Decade of Ocean Exploration.
Agenda: To review and evaluate research proposals and projects as part of the selection process for awards.
Reason for closing: The proposals and projects being reviewed include information of a proprietary or confidential nature, including technical information; financial data, such as salaries; and personal information concerning individuals associated with the proposals and projects. These matters are within exemptions (4) and (6) of 5 U.S.C. 552(b), Freedom of Information Act. The rendering of advice by the panel is considered to be a part of the Foundation's deliberative process and is thus subject to exemption (5) of the Act.
Authority to close meeting: This determination was made by the Committee Management Officer pursuant to provisions of section 10(d) of Pub. L. 92-463. The Committee Management Officer was delegated the authority to make determinations by the Director, NSF, on February 11, 1976.

M. REBECCA WINKLER,
Acting Committee Management Officer.

JULY 14, 1976.

[FR Doc.76-20745 Filed 7-16-76;8:45 am]

NUCLEAR REGULATORY COMMISSION

ADVISORY COMMITTEE ON REACTOR SAFEGUARDS AD HOC WORKING GROUP ON REACTOR PRESSURE VESSEL LOADINGS

Meeting

In accordance with the purposes of sections 29 and 182b. of the Atomic Energy Act (42 U.S.C. 2039, 2232b.), the ACRS Ad Hoc Working Group on Reactor Pressure Vessel Loadings will hold a meeting on August 5, 1976 at the Hyatt Regency Hotel, 21 Avenue Road, Toronto, Ontario, Canada M5R2G1. The purpose of this meeting is to continue the Committee's review of the calculations of loadings on reactor pressure vessels and their supports under severe accident conditions.

The agenda for the subject meeting shall be as follows:

Thursday, August 5, 1976, 8:30 a.m. The Working Group will meet in closed Executive Session, with any of its consultants who may be present, to exchange opinions and discuss preliminary views and recommendations relating to calculations of the loadings on reactor pressure vessels and their supports under severe accident conditions.

9 a.m. until approximately 12:30 p.m. The Working Group will meet in closed session to hear presentations of proprietary information by representatives of the NRC Staff, the Westinghouse Electric Corporation, and their consultants.

1:30 p.m. until conclusion of business. The Working Group will meet in open session to hear presentations by representatives of Stone and Webster Engineering Corporation and the NRC Staff and to hold discussions with these groups on the subject of application of the above

calculations to pressurized water reactors, such as the North Anna Power Station reactors.

At the conclusion of the open session, the Working Group may caucus in a brief, closed session to determine whether the matters identified in the initial closed session have been adequately covered. During the session, Working Group members and consultants will discuss their opinions and recommendations on these matters. Upon conclusion of this caucus, the Working Group will meet again in brief open session to announce its determination.

I have determined, in accordance with subsection 10(d) of Pub. L. 92-463, that it is necessary to conduct the above closed sessions to protect the free interchange of internal views in the final stages of the Working Group's deliberative process (5 U.S.C. 552(b)(5)) and to protect confidential proprietary information (5 U.S.C. 552(b)(4)). Separation of factual material from individuals' advice, opinions, and recommendations while closed Executive Sessions are in progress is considered impractical.

Practical considerations may dictate alterations in the above agenda or schedule. The Chairman of the Working Group is empowered to conduct the meeting in a manner that, in his judgment, will facilitate the orderly conduct of business, including provisions to carry over an incompleted open session from one day to the next.

With respect to public participation in the open portion of the meeting, the following requirements shall apply:

(a) Persons wishing to submit written statements regarding the agenda items may do so by providing a readily reproducible copy to the Working Group at the beginning of the meeting. Comments should be limited to safety related areas within the Committee's purview.

Persons desiring to mail written comments may do so by sending a readily reproducible copy thereof in time for consideration at this meeting. Comments postmarked no later than July 29, 1976 to Mr. R. Muller, ACRS, NRC, Washington, DC 20555 will normally be received in time to be considered at this meeting.

(b) Those persons wishing to make an oral statement at the meeting should make a written request to do so, identifying the topics and desired presentation time so that appropriate arrangements can be made. The Working Group will receive oral statements on topics relevant to the Committee's purview at an appropriate time chosen by the Chairman of the Working Group.

(c) Further information regarding topics to be discussed, whether the meeting has been cancelled or rescheduled, the Chairman's ruling on requests for the opportunity to present oral statements and the time allotted therefor can be obtained by a prepaid telephone call on August 4, 1976 to the Office of the Executive Director of the Committee (telephone 202/634-1413, Attn: Mr. R. Muller) between 8:15 a.m. and 5 p.m., e.d.t.

(d) Questions may be propounded only by members of the Working Group and its consultants.

(e) The use of still, motion picture, and television cameras, the physical installation and presence of which will not interfere with the conduct of the meeting, will be permitted both before and after the meeting and during any recess. The use of such equipment will not, however, be allowed while the meeting is in session.

(f) Persons with agreements or orders permitting access to proprietary information may attend portions of ACRS meetings where this material is being discussed upon confirmation that such agreements are effective and relate to the material being discussed.

The Executive Director of the ACRS should be informed of such an agreement at least three working days prior to the meeting so that the agreement can be confirmed and a determination can be made regarding the applicability of the agreement to the material that will be discussed during the meeting. Minimum information provided should include information regarding the date of the agreement, the scope of material included in the agreement, the project or projects involved, and the names and titles of the persons signing the agreement. Additional information may be requested to identify the specific agreement involved. A copy of the executed agreement should be provided to Mr. R. Muller of the ACRS Office, prior to the beginning of the meeting.

(g) A copy of the transcript of the open portion of the meeting will be available for inspection on or after August 12, 1976 at the NRC Public Document Room, 1717 H St., NW., Washington, DC 20555, at the Louisa County Courthouse, Office of the County Administrator, Board of Supervisors, Louisa, VA 23093, and at the Alderman Library, Manuscripts Department, University of Virginia, Charlottesville, VA 22901.

Copies of the minutes of the meeting will be made available for inspection at the NRC Public Document Room, 1717 H St., NW., Washington, DC 20555 after November 5, 1976. Copies may be obtained upon payment of appropriate charges.

Dated: July 15, 1976.

JOHN C. HOYLE,
Advisory Committee Management Officer.

[FR Doc.76-20922 Filed 7-16-76;8:45 am]

ADVISORY COMMITTEE ON REACTOR SAFEGUARDS

Proposed Meetings

In order to provide advance information regarding proposed meetings of ACRS Subcommittees, Working Groups, and the full Committee, the following preliminary schedule is being published. This preliminary schedule reflects the current situation, taking into account additional meetings which have been scheduled and meetings which have been postponed or cancelled since the last list of proposed meetings published in FR Vol. 41, Monday, June 14, 1976, page 24007. Those meetings that are definitely scheduled have had, or will have, an individual notice published in the FEDERAL REGISTER approximately 15 days (or more) prior to the meeting. Those Subcommittee and Working Group meetings for which it is anticipated that there will be a portion or all of the meeting open to the public are indicated by an asterisk (*). It is expected that the sessions of the full Committee meeting designated by an asterisk (*) will be open in whole or in part to the public. Information as to whether a meeting has been firmly scheduled, cancelled, or rescheduled, or whether changes have been made in the agenda for the August 12-14, 1976 ACRS full Committee meeting can be obtained by a prepaid telephone call to the Office of the Executive Director of the Committee (telephone 202/634-1406, Attn: Mary E. Vanderholt) between 8:15 a.m. and 5 p.m. e.d.t.

SUBCOMMITTEE AND WORKING GROUP MEETINGS

**Peaking Factors*, July 21, rescheduled from July 19, 1976, Washington, DC to continue discusion of methods of measuring power distribution in reactors whose cores have been fabricated by Combustion Engineering, Inc. Notice has been published in FR Vol. 41, July 1, 1976, page 27140, and in FR Vol. 41, July 12, 1976, page 28599.

**Shippingport Atomic Power Station*, July 21, 1976, Coraopolis, PA (announced in FR Vol. 41, June 14, 1976, page 24008, as "Light Water Breeder Reactor," July 20, 1976, Pittsburgh, PA) to discuss matters related to the development of the light water breeder reactor to be installed in the Shippingport Nuclear Plant. Notice has been published in FR Vol. 41, July 1, 1976, page 27138.

**Emergency Core Cooling Systems, (ECCS)*, July 21, 22, and 23, 1976, Richland, WA (rescheduled from Hanford, WA) to review the EXXON ECCS evaluation model and to review basic research concerning ECCS. Notices have been published in FR Vol. 41, July 1, 1976, pages 27131 and 27138, and in FR Vol. 41, July 12, 1976, page 28598.

**Waste Management*, July 22 and 23, 1976, Washington, DC to review recent Nuclear Regulatory Commission and Energy Research and Development Administration nuclear waste management documents and plans. Notice has been published in FR Vol. 41, July 1, 1976, page 27139.

**Emergency Core Cooling Systems, (ECCS)*, July 29 and 30, 1976, Idaho Falls, ID (rescheduled from July 28, 29, and 30, 1976) to review work at Aerojet Nuclear Corporation pertaining to ECCS and, in particular, code development and experimental programs. Notice has been published in FR Vol. 41, July 12, 1976, page 28595.

**Diablo Canyon Nuclear Power Station, Units 1 and 2*, rescheduled from August 3, 1976 to (tentatively) August 31 and September 1, 1976.

**Ad Hoc Working Group on Reactor Pressure Vessel Loadings*, August 5, 1976, Toronto, Ontario, Canada to continue the review of the calculations of loadings on reactor pressure vessels and their supports under severe accident conditions. Notice of this meeting appears elsewhere in this issue.

**Peaking Factors*, rescheduled from August 6, 1976 to August 10, 1976, Washington, DC to continue discussion of methods of measuring power distribution in reactors

whose cores have been fabricated by the General Electric Company.

*Fire Protection, August 11, 1976, Washington, DC to continue review of a proposed Regulatory Guide on Fire Protection.

*Regulatory Guides, August 11, 1976, Washington, DC to review working papers regarding future Regulatory Guides and proposed changes to existing Guides.

*North Anna Power Station, Units 1 and 2, August 11, 1976, Washington, DC to continue the review of the application of the Virginia Electric and Power Company for an operating license for Units 1 and 2.

*Peaking Factors, August 20, 1976, Washington, DC to continue discussion of methods of measuring power distribution in reactors whose cores are fabricated by the Babcock and Wilcox Company.

*Montague Nuclear Power Station, Units 1 and 2, August 26 and 27, 1976, Montague, MA to review the application of the Northeast Nuclear Energy Company for a permit to construct Units 1 and 2.

*Three Mile Island Nuclear Station, Unit 2, postponed from August 27, 1976, Harrisburg, PA to late September 1976, Harrisburg, PA.

*Diablo Canyon Nuclear Power Station, Units 1 and 2, August 31 and September 1, 1976 (tentative), Los Angeles, CA to continue the review of the application of the Pacific Gas and Electric Company for an operating license.

FULL COMMITTEE MEETINGS

AUGUST 12–14, 1976

A. *North Anna Power Station, Units 1 and 2—Operating License Review.

B. *Shippingport Pressurized Water Reactor—Modified Core Loading.

C. *SWESSAR/RESSAR-3S — Preliminary Design Approval.

SEPTEMBER 9–11, 1976

Agenda to be announced.

Dated: July 15, 1976.

JOHN C. HOYLE,
Advisory Committee Management Officer.

[FR Doc.76-20921 Filed 7-16-76;8:45 am]

SECURITIES AND EXCHANGE COMMISSION

[Rel. No. 19608]

ALLEGHENY POWER SYSTEM, ET AL.

Proposed Exchange of Utility Assets Between Public Utility Subsidiary Companies

JULY 9, 1976.

In the matter of Allegheny Power System, Inc., 320 Park Avenue, New York, New York 10022; The Potomac Edison Company, Downsville Pike, Hagerstown, Maryland 21740; West Penn Power Company, 800 Cabin Hill Drive, Greensburg, Pennsylvania 15601.

Notice is hereby given that Allegheny Power System, Inc., ("APS"), a registered holding company, and two of its electric utility subsidiary companies, the Potomac Edison Company ("Potomac") and West Penn Power Company ("West Penn", have filed an application-declaration and amendments thereto with this Commission pursuant to the Public Utility Holding Company Act of 1935 ("Act") designating Sections 9, 10 and 12 thereof as applicable to the proposed transaction. All interested persons are referred to the application-declaration as amended, which is summarized below, for a complete statement of the proposed transaction.

In addition to furnishing retail and wholesale electric service in Maryland, Virginia and West Virginia, Potomac provides electric service to approximately 36,800 retail customers and to two municipal wholesale customers in five Pennsylvania counties. It is stated that in 1975, Potomac received from its Pennsylvania customers operating revenues of $21,225,000 (about 12%), from which it realized $1,662,000 (about 8%) of its net income.

Potomac proposes to transfer to West Penn all of the electric transmission and distribution facilities and associated properties in Pennsylvania ("Distribution Properties owned and used by Potomac to provide electric service to its Pennsylvania customers. The transfer will be based on the depreciated original cost of the Distribution Properties, as determined on the closing date (it is presently estimated that such depreciated original cost will be about $22,000,000. In exchange therefor, West Penn intends to transfer to Potomac an equivalent portion, also based on the depreciated original cost at the closing date, of its 50% undivided ownership interest in the Harrison electric generating station ("Harrison Station"), located in Harrison County, West Virginia, which is jointly owned by Potomac, West Penn and Monongahela Power Company (another electric utility subisidary of APS) as tenants in common.

The applicants propose that in each case the computation of depreciated original cost will reflect the transferor's unamortized investment tax credit and accumulated deferred income taxes related to the assets being transferred and, in turn, that the transferee will reflect on its books the value which the transferor had on its books for the assets transferred. The applicants state that this proposal is in accordance with the Federal Power Commission's Uniform System of Accounts. Further, they state that regardless of whether the Internal Revenue Service treats the proposed transfers as a "sale" (in which event any gain or loss to the transferor would be recognized) or as a "tax free exchange of like-kind assets", the unamortized portion of the investment tax credit and deferred income taxes on the books of each transferor must be disposed of with the assets to which they are related. In this connection, the applicants state that because they are members of an affiliated group (composed of APS and all of its subsidiaries) which files a consolidated Federal Income Tax return, (1) the Internal Revenue Code provisions for recapture of investment tax credits are not applicable and, to the extent that either Potomac or West Penn realizes a gain on the transfers, (2) any such gain would be taxable ratably to the transferor as the property is depreciated by the transferee and would be substantially offset by such depreciation.

It is stated that if the proposed transactions had been consummated on December 31, 1975, the depreciated original cost of the Distribution Properties would have been $21,909,000, the equivalent portion of the Harrison Station would have been 135,696 kilowatts, West Penn's undivided interest in the Harrison Station would have been reduced from 50% to 42.9%, and Potomac's undivided interest in the station would have increased from 25% 32.1%.

Potomac and West Penn anticipate that the proposed transfer will have no significant impact upon their rates of service. First, although Potomac expects to discontinue furnishing electric service to its Pennsylvania customers upon consummation of the proposed transfer, such customers will be served thereafter by West Penn, which intends to adopt and apply the presently effective rates, rules and regulations governing Potomac's Pennsylvania service (including the contracts between Potomac and its two municipal wholesale customers). Second, Potomac expects that each regulatory commission having jurisdiction over its service territories and business after the proposed transfer will treat the additional portion of the Harriman Station acquired in exchange for the for the Distribution Properties in the same manner as they treat Potomac's existing 25% undivided interest in the station: that is, in all rate cases Potomac's portion of the Harrison Station, as carried on its books, has been treated, along with other generating capacity, as a part of Potomac's bulk power supply facilities for rate base purposes, and each regulatory commission determines, pursuant to an acceptable cost allocation formula (generally related to peak responsibility) the portion of Potomac's bulk power supply facilities to be included in the rate base in that jurisdiction. The applicants note, however, that as a result of the different principles and approaches utilized by the regulatory commissions, minor differences in service rates, which cannot now be determined, may result from the proposed transfer.

It is expected that the Distribution Properties will be released from the Indenture dated October 1, 1944, as amended and supplemented, between Potomac and Chemical Bank and T. J. Foley, trustees, ("Potomac Indenture") and that such properties will become subject to the lien of the Indenture dated March 1, 1916, as amended and supplemented, between West Penn and the Chase Manhattan Bank ("West Penn Indenture"), trustee, upon their acquisition by West Penn. Likewise, it is expected that the interest in the Harrison Station to be transferred to Potomac will be released from the West Penn Indenture and will become subject to the lien of the Potomac Indenture.

The applicants also state that the purposes underlying the proposed transaction are to: (a) Simplify the administrative and regulatory burdens resulting from both Potomac and West Penn being subject to the jurisdiction of the Penn-

sylvania Public Utility Commission ("Pa PUC"); (b) reduce Potomac's dependence upon its sister companies in the APS system for generating capacity reserves and, in turn, reduce the amount of capacity it purchases from them under the System Power Supply Agreement; and, (c) equalize in the future Potomac's owned generating capacity (as related to load) under the System Power Supply Agreement with that of its sister companies, without the necessity of constructing excessive amounts of more expensive future generating capacity.

The State Corporation Commission of Virginia and the Public Service Commission of West Virginia have approved the proposed transfer. It is stated that the PaPUC also has jurisdiction over the proposed transaction. No other state commission and no federal commission, other than this Commission, has jurisdiction over the proposed transaction. The applicants state that the fees and expenses to be incurred in connection with the proposed transaction will be supplied by amendment.

Notice is further given that any interested person may, not later than August 3, 1976, request in writing that a hearing be held on such matter, stating the nature of his interest, the reasons for such request, and the issues of fact or law raised by said application-declaration, as amended, which he desires to controvert; or he may request that he be notified if the Commission should order a hearing thereon. Any such request should be addressed: Secretary, Securities and Exchange Commission, Washington, D.C. 20549. A copy of such request should be served personally or by mail upon the applicants-declarants at the above-stated addresses, and proof of service (by affidavit or, in case or an attorney at law, by certificate) should be filed with the request. At any time after said date, the application-declaration, as amended, or as it may be further amended, may be granted and permitted to become effective as provided in Rule 23 of the General Rules and Regulations promulgated under the Act, or the Commission may grant exemption from such rules as provided in Rules 20(a) and 100 thereof or take such other action at it may deem appropriate. Persons who request a hearing or advice as to whether a hearing is ordered will receive any notices and orders issued in this matter, including the date of the hearing (if ordered) and any postponements thereof.

For the Commission, by the Division of Corporate Regulation, pursuant to delegated authority.

GEORGE A. FITZSIMMONS,
Secretary.

[FR Doc.76-20793 Filed 7-16-76;8:45 am]

[Release No. 12617; SR-BSE-76-9]

BOSTON STOCK EXCHANGE

Order Approving Proposed Rule Change

JULY 12, 1976.

On May 4, 1976, the Boston Stock Exchange (the "BSE"), 53 State Street, Boston, Massachusetts 02109, filed with the Commission, pursuant to Section 19(b) of the Securities Exchange Act of 1934 (the "Act"), as amended by the Securities Acts Amendments of 1975, and Rule 19b-4 thereunder, copies of a proposed rule change. The BSE filed amendments and corrections to the proposed rule change on May 27, 1976. The rule change provides for regulation of short sales on the BSE by the BSE and is substantially similar to the Commission's Rule 10a-1 under the Act.

Notice of the proposed rule change was given by publication of a Commission release (Securities Exchange Act Release No. 12502 (June 2, 1976)), and notice together with the terms of substance of the proposed rule change was given by publication in the FEDERAL REGISTER (41 FR 23253 (June 9, 1976)).

The Commission finds that the proposed rule change is consistent with the requirements of the Act and the rules and regulations thereunder applicable to exchanges, and, in particular, the requirements of Section 6, and the rules and regulations thereunder.

It is therefore, ordered, Pursuant to section 19(b)(2) of the Act, that the proposed rule change filed with the Commission on May 4, 1976, and amended and corrected on May 27, 1976, be, and it hereby is approved.

For the Commission by the Division of Market Regulation, pursuant to delegated authority.

SHIRLEY E. HOLLIS,
Assistant Secretary.

[FR Doc.76-20794 Filed 7-16-76;8:45 am]

[Rel. No. 9346, 811-2494]

CONTRAN CORP.

Filing of Application Pursuant to Section 8(f) of the Act for an Order Declaring That Contran Corporation Has Ceased To Be an Investment Company

JULY 8, 1976.

Notice is hereby given that Contran Corporation ("Contran"), 12880 Hillcrest Road, Suite 216, Dallas, Texas 75230, registered under the Investment Company Act of 1940 (the "Act") as a closed-end, non-diversified, management investment company, filed an application on November 25, 1975, and amendments thereto on April 16, 1976, and May 17, 1976, for an order of the Commission, pursuant to Section 8(f) of the Act, declaring that Contran has ceased to be an investment company as defined in the Act. All interested persons are referred to the application on file with the Commission for a statement of the representations contained therein, which are summarized below.

Contran was organized as a Delaware corporation in 1944. Prior to September of 1973, Contran's principal asset was its common stock interest in a majority-owned subsidiary, Ward Cut-Rate Drug Company ("Ward"). On September 1, 1973, Ward was merged into Jack Eckerd Corporation ("Eckerd") and Contran received, in exchange for its interest in Ward, 897,107 shares of Eckerd Common stock, approximately 4.9% of Eckerd's outstanding common shares, and warrants to purchase 114,200 shares of Eckerd common stock.

Section 3(a)(3) of the Act defines an investment company to mean any issuer which is engaged or proposes to engage in the business of investing, reinvesting, owning, holding, or trading in securities, and owns or proposes to acquire investment securities having a value exceeding 40 percent of the value of such issuer's total assets (exclusive of Government securities and cash items) on an unconsolidated basis. "Investment securities", for purposes of section 3(a)(3) of the Act, are defined to include all securities except Government securities, securities issued by employees' securities companies, and securities issued by majority owned subsidiaries of the owner which are not investment companies.

Because Contran's holding of Eckerd common stock, an "investment security" for purposes of section 3(a)(3) of the Act, represented substantially in excess of 40 percent of the value of its total assets, Contran registered with the Commission as an investment company on June 24, 1974.

On October 31, 1974, Contran's stockholders, by a majority vote at their annual meeting, authorized the board of directors to dispose of some or all of Contran's holdings of Eckerd common stock and, in the event of such disposition under appropriate circumstances, authorized Contran to make application to the Commission for an order that it had ceased to be an investment company under the Act.

Contran asserts that it has implemented this resolution so that it is now in a position to make this applicaion to the Commission under section 8(f) of the Act. Specifically, Contran asserts that it has sold all of its Eckerd common stock and warrants and that it no longer owns any investment securities.

Contran states that, as of September 30, 1975, it had total assets of $18,813,000 and that its majority interest in Valhi constituted $12,566,000 of such assets.

Contran states that in August of 1975, as a result of a tender offer commenced on July 21, 1975, Contran became the owner of 285,133 shares of Valhi, Inc. ("Valhi") common stock. Contran states that these shareholdings and an additional 1,000 Valhi common shares acquired in open market purchases on July 17 and 18, 1975, constitute 55.7 percent of the presently outstanding Valhi common stock. Contran states that Valhi is an operating company primarily engaged in diversified farming and agricultural land management activities with total assets, as of December 31, 1975, of $42,864,000.

Section 8(f) of the Act provides that whenever the Commission, on its own motion or upon application, finds that a registered investment company has ceased to be an investment company, it shall so declare by order and upon the taking effect of such order the registration of such company shall cease to be in effect. Section 8(f) of the Act further

provides that if necessary for the protection of investors, such an order may be made upon appropriate conditions.

Contran asserts that it is not an investment company as defined in the Act. Section 3(a)(1) of the Act defines an investment company to mean any issuer which is or holds itself out as being engaged primarily, or proposes to engage primarily, in the business of investing, reinvesting, or trading in securities. Contran asserts that it has never been, or held itself out as being, engaged primarily, in the business of investing, reinvesting, or trading in securities within the meaning of section 3(a)(1) of the Act.

In support thereof, Contran states that, prior to 1969, it was a dormant company and had not engaged in any business or investment activities. From 1969 to September 1, 1973, Contran states that its principal asset was its 62 percent common stock interest in Ward, a retail drug store chain, and that this interest represented 83 percent of its total assets. During this period, Contran also owned all of the outstanding common stock of the Clyde Campbell University Shop, Inc., Flight Proficiency Service, Inc., and Contran Realty Corp.

From September 1, 1973, the date of the Ward-Eckerd merger, through August of 1975, when Contran became a majority owner of Valhi common stock, Contran asserts that it neither primarily engaged nor held itself out as being primarily engaged in the business of investing, reinvesting, or trading in securities.

Contran states that its tender offer for Valhi common stock reflected its intention to obtain and exercise working control of Valhi, including majority representation on Valhi's board of directors. Following its acquisition of a majority interest in Valhi, Contran states that it has acted to effect this objective and that its principal officers now serve as the principal officers of Valhi and that such persons comprise a majority of the Valhi board of directors. Contran states that these persons now devote most of their time to the conduct of Valhi's operations and participate extensively in the management, administration and performance of Valhi's business activities. Contran asserts that it has no intention of disposing of any of its Valhi stockholdings.

Contran further asserts that, as a result of its sales of Eckerd securities and its acquisition of a majority interest in Valhi, the composition of its assets has changed markedly and that Contran no longer falls within the definition of investment company set forth in Section 3(a)(3) of the Act. Contran asserts that none of the proceeds from its sale of the Eckerd securities were used to acquire investment securities and that none of its present assets constitute investment securities.

Contran has filed an application under sections 17(b) and 23(c) of the Act in connection with transactions to be effected pursuant to a settlement of certain litigation. Contran has consented to the requested order of deregistration being conditioned on the Commission's retention of such jurisdiction as it may have with respect to the settlement and these transactions.

For the reasons set forth above, Contran requests that the Commission enter an order, pursuant to section 8(f) of the Act, declaring that it has ceased to be an investment company.

Notice is further given that any interested person may, not later than August 3, 1976, at 5:30 p.m., submit to the Commission in writing a request for a hearing on the matter accompanied by a statement as to the nature of his interest, the reasons for such request, and the issues, if any, of fact or law proposed to be controverted, or he may request that he be notified if the Commission shall order a hearing thereon. Any such communication shall be addressed: Secretary, Securities and Exchange Commission, Washington, D.C. 20549. A copy of such request shall be served personally or by mail upon Contran at the address stated above. Proof of such service (by affidavit, or in case of an attorney-at-law, by certificate) shall be filed contemporaneously with the request.

As provided by Rule 0-5 of the rules and regulations promulgated under the Act, an order disposing of the application will be issued as of course following August 3, 1976, unless the Commission thereafter orders a hearing upon request or upon the Commission's own motion. Persons who request a hearing, or advice as to whether a hearing is ordered, will receive any notices or orders issued in this matter, including the date of the hearing (if ordered) and any postponements thereof.

By the Commission.

SHIRLEY E. HOLLIS,
Assistant Secretary.

[FR Doc.76-20795 Filed 7-16-76;8:45 am]

[Relase No. 19609; 70-5399]

MIDDLE SOUTH UTILITIES, INC., ET AL.

Post-Effective Amendment Regarding Proposed Increase in Authorized Bank Borrowings

JULY 9, 1976.

In the matter of Middle South Utilities, Inc., P.O. Box 61005, New Orleans, Louisiana 70161; Mississippi Power & Light Company, Arkansas Power & Light Company, Arkansas-Missouri Power Company, Louisiana Power & Light Company, New Orleans Public Service Inc., Middle South Energy, Inc.

Notice is hereby given that Middle South Utilities, Inc. ("MSU"), a registered holding company, its wholly-owned subsidiary, Middle South Energy, Inc. ("MSE"), which has been organized to construct and own electric generating facilities for the MSU System, and MSU's above-named principal operating subsidiaries have filed with this Commission a post-effective amendment to the application-declaration in this proceeding pursuant to sections 6(a) and 7 of the Public Utility Holding Company Act of 1935 ("Act") regarding the following proposed transactions. All interested persons are referred to the amended application-declaration for a complete statement of the proposed transactions.

By order in this proceeding dated June 4, 1974 (HCAR No. 18437), MSE, among other things, was authorized, pursuant to a Bank Loan Agreement with Manufacturers Hanover Trust Company, as agent, and a group of banks ("'A' Banks"), to issue and sell through December 31, 1979, up to $308,500,000 of notes maturing December 31, 1982, for the purpose of designing and constructing the Grand Gulf Nuclear Electric Station project.

By further order in this proceeding dated December 10, 1975 (HCAR No. 19295), MSE was authorized (a) to enter into an amendment to the Bank Loan Agreement to add certain additional banks ("'B' Banks") to the banks which are parties to such agreement and to increase the commitment of one "A" Bank thereunder and (b) to increase the amount to be borrowed thereunder to $353,500,000. In accordance with such orders, MSE has to date borrowed $207,500,000 from the "A" Banks and the "B" Banks.

To enable MSE to continue construction of the Grand Gulf Project and for the other designated purposes, MSE now intends to amend the terms of the Bank Loan Agreement and proposes to issue and sell its notes thereunder. The Bank Loan Agreement will be amended to add certain banks ("'C' Banks") to the banks which are presently parties to such agreement and to increase the commitments of two "A" Banks thereunder. The names of the "C" Banks and their commitments and the names of the "A" Banks increasing their commitments and their increased commitments are as follows (The commitments of the "A" Banks and of the "B" Banks will otherwise remain unchanged.):

"C" Banks:	
Chemical Bank	$25,000,000
The First National Bank of Chicago	20,000,000
Marine Midland Bank	10,000,000
American Security and Trust Company	5,000,000
La Salle National Bank	5,000,000
Provident National Bank	5,000,000
Rhode Island Hospital Trust National Bank	5,000,000
Union Bank	5,000,000
"A" Banks:	
Citibank, N.A. — (previous commitment $45,000,000)	75,000,000
Manufacturers Hanover Trust Company—(previous commitment—$60,000,000)	61,500,000

The aggregate commitment under the Bank Loan Agreement, as it is to be amended, will thus be increased by a total of $111,500,000, from $353,500,000 to $465,000,000. In all other respects the transactions will remain unchanged.

MSE states that through May 31, 1976, $303,500,000, had been spent on the Grand Gulf Nuclear Electric Station project and that it is anticipated that by year-end 1976 an estimated $426,000,-

000 will have been spent on the project. The construction budget for 1977 is estimated at $265,700,000.

Although the time-schedule is not yet set, MSE is presently planning to issue and sell, subject to Commission approval, medium-term debt securities to a group of major insurance companies in order to reduce the amount of its short-term bank loans.

It is represented that no State or Federal commission, other than this Commission, has jurisdiction over the proposed issue and sale of notes.

Notice is further given that any interested person may, not later than August 3, 1976, request in writing that a hearing be held on such matter, stating the nature of his interest, the reasons for such request, and the issues of fact or law raised by said post-effective amendment to the application-declaration which he desires to controvert; or he may request that he be notified if the Commission should order a hearing thereon. Any such request should be addressed: Secretary, Securities and Exchange Commission, Washington, D.C. 20549. A copy of such request should be served personally or by mail upon the applicants-declarants at the above-stated address, and proof of service (by affidavit or, in case of an attorney at law, by certificate) should be filed with the request. At any time after said date, the application-declaration, as now amended or as it may be further amended, may be granted and permitted to become effective as provided in Rule 23 of the General Rules and Regulations promulgated under the Act, or the Commission may grant exemption from such rules as provided in Rules 20(a) and 100 thereof or take such other action as it may deem appropriate. Persons who request a hearing or advice as to whether a hearing is ordered will receive any notices and orders issued in this matter, including the date of the hearing (if ordered) and any postponements thereof.

For the Commission, by the Division of Corporate Regulation, pursuant to delegated authority.

SHIRLEY E. HOLLIS,
Assistant Secretary.

[FR Doc.76-20796 Filed 7-16-76;8:45 am]

[Rel. No. 9340; 812-3974]

WEEDEN CORPORATE BOND TRUST AND WEEDEN & CO.

Filing of Application Pursuant to Section 6(c) of the Act for an Order of Exemption From the Provisions of Section 14 (a) of the Act and Rules 19b-1 and 22c-1 Thereunder

JULY 12, 1976.

Notice is hereby given that Weeden Corporate Bond Trust, Series 1 ("First Trust"), a unit investment trust registered under the Investment Company Act of 1940 ("Act") and its sponsor, Weeden & Co. ("Sponsor"), 25 Broad Street, New York, New York 10004 (hereinafter the Sponsor and the First Trust are referred to collectively as "Applicants"); have filed, on June 25, 1976, an application pursuant to section 6(c) of the Act for an order of the Commission exempting the First Trust and subsequent Series, as defined below (hereinafter referred to collectively as "Trusts" and severally as "Trust"), from the provisions of section 14(a) of the Act and exempting the frequency of capital gains distributions of the Trusts and the secondary market operations of Sponsor from the provisions of Rule 19b-1 and Rule 22c-1, respectively, under the Act. All interested persons are referred to the application on file with the Commision for a statement of the representations contained therein, which are summarized below.

The First Trust is a unit investment trust and is the first of a series of similar but separate trusts which the Sponsor intends to form (herein all such subsequent series are collectively referred to as the "Series"). The Trusts will be created under the laws of the Commonwealth of Massachusetts pursuant to separate trust agreements, such agreements containing certain standard terms and conditions of trust common to all the Trusts.

The Sponsor has filed a Form S-6 Registration Statement under the Securities Act of 1933 ("1933 Act") covering a maximum of 20,000 Units of fractional undivided interests in the First Trust to be offered to investors at a public offering price set forth in the prospectus included in the S-6 Registration Statement (including 5,000 Units registered for secondary market purposes). The 1933 Act Registration Statement has not yet become effective. The Sponsor has also filed a Form N-8A Notification of Registration and a Form N-8B-2 Registration Statment under the Act relating to the First Trust.

Each Trust will be governed by a trust agreement for that Trust (hereinafter called the "Agreement"), which will be executed prior to the time the registration statement for such Trust becomes effective, and under which the Sponsor will act as such. The United States Trust Company, as Trustee, Shawmut Bank of Boston, as Co-trustee, and Interactive Data Services, Inc. will act as Evaluator. The Agreement for each Trust will contain standard terms and conditions of trust common to all Trusts. Pursuant to the Agreement, the Sponsor will deposit with the Trust bonds which the Sponsor shall have accumulated for such purpose in an amount at least equal to the aggregate principal amount of the Units to be offered. Simultaneously with such deposit, the Trustees will deliver to the Sponsor registered certificates for the Units which will represent the entire ownership of the respective Trust. These Units will in turn be offered for sale to the public by the Sponsor.

Applicants state that such bonds will not be pledged or be in any other way subjected to any debt at any time after the bonds are deposited in the Trusts except for the lien of the Trustee as security for certain liabilities as set forth in the Agreement. Such bonds will be primarily corporate debt obligations.

The assets of each Trust will consist of the bonds initially deposited, such other bonds as may be acquired or purchased from time to time in exchange or substitution for any of the bonds, accrued and undistributed interest, and undistributed cash. Certain of these bonds may from time to time be sold under the special circumstances set forth in the Agreement with respect to such Trust or may be redeemed or may mature in accordance with their terms.

Each Unit of each Trust will represent a fractional undivided interest in that Trust, and will be redeemable. The numerator of the fractional interest represented will be 1, the denominator, the number of Units outstanding in the particular Trust. If any Units shall be redeemed, the denominator of such fraction will be reduced and the fractional undivided interest represented by each Unit outstanding will be increased. Units will remain outstanding until redeemed or until the termination of the Agreement with respect to such Trust. The Agreement may be terminated with respect to any of the Trusts upon approval by 66⅔% in interest of the certificate-holders of such Trust or, in the event that the value of the bonds in such Trust shall fall below $6,000,000, or such other liquidation amount as may be specified in the Agreement with respect to a particular Trust, upon direction of the Sponsor to the Trustee. There is no provision in the Agreement for the issuance of any Units after the initial offering of Units (except to the extent that the secondary trading by the Sponsor in the Units is deemed the issuance of units under the Act), and such activity will not take place.

While the Sponsor undertakes no obligation to do so, it is its intention to maintain a market for Units of each of the Trusts and continuously to offer to purchase such Units at prices in excess of the redemption prices as set forth in the Agreement. In the absence of such a market, certificate-holders may only be able to dispose of their Units by redemption.

SECTION 14(a)

Section 14(a) of the Act requires that a registered investment company, prior to making a public offering of its securities: (a) have a net worth of $100,000, (b) have previously made a public offering and at that time have had a net worth of $100,000, or (c) have made arrangements for at least $100,000 to be paid in by 25 or fewer persons before acceptance of public subscriptions.

Applicants seek an exemption from the provisions of Section 14(a) in order that a public offering of Units of the Trusts as described above may be made. In connection with the requested exemption from Section 14(a), the Sponsor agrees: (1) To refund on demand and without deduction the sales load to purchasers of Units of any Trust if, within 90 days after the registration of such Trust under the Securities Act of 1933 becomes effective, the net worth of such Trust

shall be reduced to less than $100,000, or if such Trust is terminated; (ii) to instruct the Trustee on the date the bonds are deposited in each Trust that if such Trust shall at any time have a net worth of less than $6,000,000, or such other liquidation amount as may be specified in the Agreement with respect to a particular Trust, as a result of redemption by the Sponsor of Units constituting a part of the unsold Units, the Trustee shall terminate such Trust in the manner provided in the Agreement and distribute any bonds or other assets deposited with the Trustee pursuant to the Agreement as provided therein; and (iii) in the event of termination for the reasons described in (ii) above, to refund any sales load to any purchasers of Units purchased from the Sponsor on demand and without any deduction.

RULE 19b-1

Rule 19b-1(a) provides in substance that no registered investment company which is a "regulated investment company" as defined in Section 851 of the Internal Revenue Code shall distribute more than one capital gain dividend in any one taxable year. Paragraph (b) of said Rule contains a similar prohibition for a company not a "regulated investment company" but permits a unit investment trust to distribute capital gain dividends received from a "regulated investment company" within a reasonable time after receipt.

Distributions of principal and interest to certificateholders of each Trust shall be made monthly. Distributions of principal constituting capital gains to certificateholders may arise in two instances: (1) if an issuing authority calls or redeems an issue held in the portfolio, the sums received by the Trusts will be distributed to a certificateholder on the next distribution date; and (2) if Units are redeemed by the Trustee and bonds from the portfolio are sold to provide the funds necessary for such redemption, each certificateholder will receive his pro rata portion of the proceeds from the bonds sold over the amount required to satisfy such redemption distribution. In such instances, a certificateholder may receive in his distribution funds which constitute capital gains, since in some cases the value of the portfolio bonds redeemed or sold may have increased since the date of initial deposit. It is anticipated that no capital gains will arise from the sale of bonds which may occur upon default on payment of principal or interest, or the occurrence of other factors which in the opinion of the Sponsor would make the retention of such bonds in the Trust detrimental to the interests of the certificateholders.

As noted, paragraph (b) of Rule 19b-1 provides that a unit investment trust may distribute capital gain dividends received from a "regulated investment company" within a reasonable time after receipt. Applicants assert that the purpose behind such provision is to avoid forcing unit investment trusts to accumulate valid distributions received throughout the year and distribute them only at year end, and that the operations of the Trusts in this regard are squarely within the purpose of such provision. However, in order to comply with the literal requirements of the Rule, the Trusts would be forced to hold any monies which would constitute capital gains upon distribution until the end of their taxable years. The application contends that such a practice would clearly be to the detriment of the certificateholders.

In support of the requested exemption, the application states that the dangers against which Rule 19b-1 is intended to guard do not exist in the situation at hand since neither the Sponsor nor any of the Trusts has control over events which might trigger capital gains, i.e., the tendering of units for redemption and the prepayment of portfolio bonds by the issuing authorities. In addition, it is alleged that the amounts involved in a normal distribution of principal are relatively small in comparison to the normal interest distribution, and such distributions are clearly indicated in accompanying reports to certificateholders as a return of principal.

RULE 22c-1

Applicants state that following the initial offering period, the Sponsor, while not obligated to do so, intends to offer to purchase the Units in the secondary market at prices based on the offering side evaluation of the bonds in the Trust, determined on the last business day of each week, effective for all sales made during the following week.

Applicants also state that the Sponsor has undertaken to adopt a procedure whereby the Evaluator, without a formal evaluation, will provide estimated evaluations on trading days. In the case of a repurchase, if the Evaluator cannot state that the previous Friday's price is at least equal to the current bid price, the Sponsor will order a full evaluation. The Sponsor agrees that, in case of the resale of Units in the secondary market, if the Evalautor cannot state that the previous Friday's price is not more than one-half point ($5.00 on a unit representing $1,000.00 principal amount of underlying bonds) greater than the current offering price, a full evaluation will be ordered. Under these circumstances, the Applicants contend that the exemption of the Sponsor from the provisions of Rule 22c-1 will in no way affect the operations of the Trust and will benefit the certificateholders by providing a repurchase price for their Units which is in excses of the current net asset value of such Units as computed for redemption purposes.

Rule 22c-1 provides, in pertinent part, that no registered investment company issuing any redeemable security, and no dealer in any such security, shall sell, redeem, or repurchase any such security except at a price based on the current net asset value of such security which is next computed after receipt of a tender of such security for redemption or of an order to purchase or sell such security.

Applicants state that Rule 22c-1 has two purposes: (1) to eliminate or to reduce any dilution of the value of outstanding redeemable securities of registered investment companies which might occur through the sale, redemption or repurchase of such securities at prices other than their current net asset values; and (2) to minimize speculative trading practices in the securities of registered investment companies.

The secondary market activities of the Sponsor and the manner for the acquisition by investors of new units, may be deemed to violate Rule 22c-1 because of the absence of daily pricing. Applicants contend, however, that the purposes of Rule 22c-1 will not be offended by the Sponsor's secondary market activities. Applicants assert that the pricing of units by the Sponsor in the secondary market will in no way dilute the assets of the Trust, and that certificateholders will benefit from the Sponsor's pricing procedure in the secondary market since they will normally receive a higher repurchase price for their Units than they could by redeeming their Units at the current net asset value, and that this will be accomplished without the cost burden to the Trust of daily evaluations of the unit redemption value.

Applicants also contend that speculation in Units of any Trusts is unlikely because price changes are limited in respect to the kind of bonds which will be held by such Trusts.

To avoid the Sponsor receiving more than the specified sales charge on the resale of Units, the Sponsor has undertaken not to resell any Units which it may repurchase at a price below the offering side evaluation of the bonds in the Trust.

Applicants therefore request an exemption from the provisions of Rule 22c-1 for Series 1 and for all subsequently created Series insofar as the Rule may apply after completion of the primary distribution of Units of such Trusts.

Section 6(c) of the Act provides, in part, that the Commission may, upon application, conditionally or unconditionally exempt any person, security, or transaction, or any class or classes of persons, securities, or transactions, from any provisions of the Act or of any rule or regulation under the Act, if and to the extent such exemption is necessary or appropriate in the public interest and consistent with the protection of investors and the purposes fairly intended by the policy and provisions of the Act.

Notice is further given that any interested person may, not later than August 5, 1976, at 5:30 p.m., submit to the Commission in writing a request for a hearing on the matter accompanied by a statement as to the nature of his interest, the reason for such request and the issues, if any, of fact or law proposed to be controverted, or he may request that he be notified if the Commission orders a hearing thereon. Any such communication should be addressed: Secretary, Securities and Exchange Commission, Washington, D.C. 20549. A copy of such request shall be served personally or by mail upon the Applicants at the address stated above. Proof of such serv-

ice (by affidavit, or, in the case of an attorney-at-law, by certificate) shall be filed contemporaneously with the request. As provided by Rule O-5 of the Rules and Regulations promulgated under the Act, an order disposing of the application herein will be issued as of course following said date, unless the Commission thereafter orders a hearing upon request or upon the Commission's own motion. Persons, who request a hearing or advice as to whether a hearing is ordered, will receive any notices and orders issued in the matter, including the date of the hearing (if ordered) and any postponements thereof.

For the Commission, by the Division of Investment Management, pursuant to delegated authority.

SHIRLEY E. HOLLIS,
Assistant Secretary.

[FR Doc.76-20797 Filed 7-16-76;8:45 am]

[Release No. 9337A; (812-3976)]

WHITE, WELD & CO. INC.

Filing of Application Pursuant to Section 9(c) for Exemption From Section 9(a) of the Investment Company Act of 1940 and Order of Temporary Exemption Pending Determination of the Application

JULY 12, 1976.

This is a repeat notice to correct an erroneous file number.

Notice is hereby given that White, Weld, & Co. Incorporated, One Liberty Plaza, 91 Liberty Street, New York, New York 10006, ("White, Weld") has filed an application pursuant to section 9(c) of the Investment Company Act of 1940 ("the Act") for an order exempting White, Weld from the provisions of section 9(a) of the Act, and for an order of temporary exemption from 9(a) pending the Commission's determination of the application. All interested persons are referred to the application on file with the Commission for a statement of the representations made therein which are summarized below.

Applicant is a registered broker-dealer under Section 15 of the Securities Exchange Act of 1934. To the best of Applicant's knowledge, Swiss Credit Bank owns approximately 41% of the voting securities of Societe anonyme financiere de Credit Suisse et de White, Weld which owns approximately 28% of the capital stock (including approximately 24% of the voting securities) of White Weld Holdings, Inc. which owns 100% (except directors' qualifying shares) of the voting securities of Applicant. Applicant acts as administrator and distributor (and, accordingly, is deemed to be the principal underwriter) for White Weld Money Market Fund Incorporated ("WWMM Fund"), an open-end, diversified management investment company registered under the Act.

On November 25, 1975, the Commission commenced an action in the United States District Court for the District of Columbia entitled "Securities and Exchange Commission v. American Institute Counselors, Inc. et al.," (75 Civ. 1965) against various defendants, including Swiss Credit Bank, alleging violations of various provisions of the federal securities laws. Swiss Credit Bank, without admitting or denying any of the allegations of the Complaint, has stipulated to the entry of a Final Order terminating the action against it, with prejudice, and entered into a Stipulation and Undertaking with the Commission.

The Final Order provides that Swiss Credit Bank shall not, directly or indirectly, make use of any means or instruments of transportation or communication in interstate commerce or the mails to sell, offer to buy or sell, or carry or cause to be carried securities of the Progress Group (as defined in the Final Order) except in accordance with the provisions of Section 5 of the Securities Act of 1933. The order further provides that Swiss Credit Bank shall not transact business with any member of the Progress Group when such member is acting as a broker-dealer or investment adviser or is engaging in investment company activities unless such member has complied with the applicable registration requirements of the securities laws of the United States.

Section 9(a) of the Act, insofar as is pertinent here, makes it unlawful for any person, or any company with which such person is affiliated, to serve or act in the capacity of employee, officer, director, member of an advisory board, investment adviser or depositor of any registered investment company, or principal underwriter for any registered open-end company if such person is by reason of any misconduct enjoined by any court of competent jurisdiction from engaging in or continuing any conduct or practice in connection with the purchase or sale of any security.

Section 9(c) provides that, upon application, the Commission by order shall grant an exemption from the provisions of section 9(a) either unconditionally or on an appropriate temporary or other conditional basis, if it is established that the prohibitions of section 9(a), as applied to the applicant, are unduly or disproportionately severe or that the conduct of such person has been such as not to make it against the public interest or protection of investors to grant such application.

Notwithstanding the filing of its application, White, Weld disclaims that Swiss Credit Bank is an "affiliate", as that term is generally applied under the securities laws of the United States, or an "affiliated person as that term is defined by the Act, of Applicant. However, were Swiss Credit Bank deemed to be an "affiliated person" of White, Weld by virtue of section 2(3) of the Act, White Weld would, to the extent that section 9(a) of the Act is applicable by virtue of entry of the Final Order against Swiss Credit Bank, be ineligible to serve or act in any of the capacities set forth in Section 9(a) by reason of section 9(a)(3) of the Act.

White, Weld submits pursuant to Section 9(c) that the prohibitions of Section 9(a) of the Act, to the extent applicable by virtue of the entry of the Final Order against Swiss Credit Bank, would be unduly and disproportionately severe as applied to White, Weld and that the conduct of Swiss Credit Bank has been such as not to make it against the public interest or protection of investors to grant this exemption. In support thereof, White, Weld represents that (i) the prohibitions of section 9(a) would deprive WWMM Fund of the continuity of services of White, Weld as its principal underwriter and (ii) neither White, Weld nor the WWMM Fund participated in any of the alleged conduct set forth in the Commission's action.

The Commission has considered the matter and finds that:

(1) The prohibitions of Section 9(a) may be unduly or disproportionately severe as applied to White, Weld in that White, Weld did not participate in any of the alleged conduct set forth in the Commission's Complaint and that the conduct of Swiss Credit Bank has been such as not to make it against the public interest or protection of investors to grant the application of White, Weld for a temporary exemption from Section 9(a) pending determination of the application; and

(2) In order to maintain the uninterrupted services provided by White, Weld to the WWMM Fund, it is necessary and appropriate in the public interest and consistent with the protection of investors and the purposes fairly intended by the policy and provisions of the Act that the temporary order be issued forthwith.

Accordingly, *it is ordered*, Pursuant to Section 9(c) of the Act, that White, Weld is hereby temporarily exempted from any of the provisions of section 9(a) of the Act operative as a result of the entry of the Final Order against Swiss Credit Bank in "Securities and Exchange Commission v. American Institute Counselors, Inc., et al., pending final determination by the Commission of White, Weld's application for an order exempting White, Weld from any of the provisions of Section 9(a) operative as a result of the entry of such Final Order.

Notice is further given that any interested person may, not later than July 26, 1976, at 5:30 p.m., submit to the Commission in writing a request for hearing on the matter accompanied by a statement as to the nature of his interest, the reason for such request, and the issues of fact or law proposed to be controverted, or he may request that he be notified if the Commission shall order a hearing thereon. Any such communication should be addressed: Secretary, Securities and Exchange Commission, Washington, D.C. 20549. A copy of such request shall be served personally or by mail (air mail if the person being served is located more than 500 miles from the point of mailing) upon White, Weld, care of Stephen R. Volk, Esquire, 53 Wall Street, New York, New York 10005. Proof of such service (by affidavit or in the case of an attorney at law by certificate) shall be filed contemporaneously with the request. At any time after said date, as provided in Rule 0-5 of the

Rules and Regulations promulgated under the Act, an order disposing of the Application herein may be issued by the Commission upon the basis of the information stated in said application, unless an order for hearing upon said application, shall be issued upon the request or upon the Commission's own motion. Persons who request a hearing or advice as to whether a hearing is ordered will receive notice of further development in this matter, including the date of the hearing (if ordered) and any postponements thereof.

By the Commission.

SHIRLEY E. HOLLIS,
Assistant Secretary.

[FR Doc.76-20798 Filed 7-16-76;8:45 am]

[Rel. No. 9349; 811-1024]

VIKING GROWTH FUND SYSTEMATIC INVESTMENT PLANS

Proposal To Terminate Registration Pursuant to Section 8(f) of the Investment Company Act of 1940

JULY 9, 1976.

Notice is hereby given that the Commission proposes, pursuant to Section 8(f) of the Investment Company Act of 1940 ("Act"), to declare by order on its own motion that Viking Growth Fund Systematic Investment Plans (the "Plan"), 6006 N. Mesa Street, El Paso, Texas, registered under the Act as a unit investment trust, has ceased to be an investment company as defined in the Act, provided that the Plan's Custodian, as described below, will continue to hold funds for holders of some twenty undeliverable, terminated Plan accounts subject to the escheat laws of the State of Minnesota.

The Commission files contain the following information concerning the Plan. The Plan was organized under the laws of Minnesota on February 1, 1961, and under the Act on February 8, 1961. Originally, the Plan consisted of three registered basic types of investment plans; the single payment investment plan, the systematic investment plan, and the systematic investment plan with insurance ("Systematic Plans"). The systematic plans were created to facilitate purchases by investors of shares of Viking Growth Fund, Inc. ("Viking Growth") formerly called Appache Fund, Inc.

During 1975, the remaining 76, of an original 206, active, non-delinquent shareholders all of whom had purchased their shares pursuant to one of the systematic plans, voluntarily terminated their participation in the Plan. Upon withdrawal from the Plan, the Plan holders according to their instructions, received cash or shares of Viking Growth.

On July 29, 1975, at a Special Meeting of stockholders of Viking Growth, the stockholders approved the sale of substantially all of Viking Growth's assets in exchange for voting shares of Industries Trend Fund ("Industries"), a diversified, open-end management company registered under the Act. Such sale was consummated on September 29, 1975. Thereafter, shares of Industries were distributed pro rata to shareholders of Viking Growth, including those shareholders who had received their shares of Viking Growth upon their withdrawal from the Plan. Viking Growth then filed a Certificate of Dissolution with the Office of the Secretary of the State of Minnesota and was thereby dissolved. All of the Fund's liabilities have been satisfied or provided for and no assets remain.

In addition to the 76 active participants who voluntarily terminated their participation in the Plan during 1975, the Northwest National Bank of Minneapolis (the "Custodian"), pursuant to the terms of the Plan Agreement has terminated all delinquent Plan Holders. The Custodian presently holds less than $1,100 for the benefit of 20 undeliverable, terminated accounts. No single account exceeds $180. Pursuant to the terms of the Plan Agreement these funds will be held by the Custodian for the account of the terminated Plan Holders, subject to the escheat laws of the State of Minnesota.

Section 8(f) of the Act provides, in pertinent part, that whenever the Commission, on its own motion or upon application, finds that a registered investment company has ceased to be an investment company, it shall so declare by order, which may be made upon appropriate conditions if necessary for the protection of investors, and upon taking effect of such order the registration of such company shall cease to be in effect.

Notice is further given that any interested person may, not later than August 3, 1976, at 5:30 p.m., submit to the Commission in writing a request for a hearing on the matter accompanied by a statement as to the nature of the interest, the reason for such request, and the issues, if any, of fact or law proposed to be controverted, or he may request that he be notified if the Commission should order a hearing thereon. Any such communication should be addressed: Secretary, Securities and Exchange Commission, Washington, D.C. 20549. A copy of such request shall be served personally or by mail upon the Plan at the address stated above. Proof of such service (by affidavit or in case of an attorney-at-law by certificate) shall be filed contemporaneously with the request. As provided by Rule O-5 of the rules and regulations promulgated under the Act, an order disposing of the matter will be issued as of course following said date unless the Commission thereafter orders a hearing upon request or upon the Commission's own motion. Persons who request a hearing, or advice as to whether a hearing is ordered, will receive any notices and orders issued in this matter, including the date of the hearing (if ordered) and any postponements thereof.

For the Commission, by the Division of Investment Management, pursuant to delegated authority.

SHIRLEY E. HOLLIS,
Assistant Secretary.

[FR Doc.76-20799 Filed 7-16-76;8:45 am]

[Rel. No. 9346; 811-2494]

CONTRAN CORP.

Application for an Order Declaring That Contran Corporation Has Ceased To Be an Investment Company

JULY 8, 1976.

Notice is hereby given that Contran Corporation ("Contran"), 12880 Hillcrest Road, Suite 216; Dallas, Texas 75230, registered under the Investment Company Act of 1940 (the "Act") as a closed-end, non-diversified, management investment company, filed an application on November 25, 1975, and amendments thereto on April 16, 1976, and May 17, 1976, for an order of the Commission, pursuant to section 8(f) of the Act, declaring that Contran has ceased to be an investment company as defined in the Act. All interested persons are referred to the application on file with the Commission for a statement of the representations contained therein, which are summarized below.

Contran was organized as a Delaware corporation in 1944. Prior to September of 1973, Contran's principal asset was its common stock interest in a majority-owned subsidiary, Ward Cut-Rate Drug Company ("Ward"). On September 1, 1973, Ward was merged into Jack Eckerd Corporation ("Eckerd") and Contran received, in exchange for its interest in Ward, 897,107 shares of Eckerd common stock, approximately 4.9 percent of Eckerd's outstanding common shares, and warrants to purchase 114,200 shares of Eckerd common stock.

Section 3(a)(3) of the Act defines an investment company to mean any issuer which is engaged or proposed to engage in the business of investing, reinvesting, owning, holding, or trading in securities, and owns or proposes to acquire investment securities having a value exceeding 40 percent of the value of such issuer's total assets (exclusive of Government securities and cash items) on an unconsolidated basis. "Investment securities", for purposes of section 3(a)(3) of the Act, are defined to include all securities except Government securities, securities issued by employees' securities companies, and securities issued by majority owned subsidiaries of the owner which are not investment companies.

Because Contran's holding of Eckerd common stock, an "investment security" for purposes of section 3(a)(3) of the Act, represented substantially in excess of 40 percent of the value of its total assets, Contran registered with the Commission as an investment company on June 24, 1974.

On October 31, 1974, Contran's stockholders, by a majority vote at their annual meeting, authorized the board of directors to dispose of some or all of Contran's holdings of Eckerd common stock and, in the event of such disposition under appropriate circumstances, authorized Contran to make application to the Commission for an order that it had ceased to be an investment company under the Act.

Contran asserts that it has implemented this resolution so that it is now in a position to make this application to the Commission under section 8(f) of the Act. Specifically, Contran asserts that it has sold all of its Eckerd common stock and warrants and that it no longer owns any investment securities.

Contran states that, as of September 30, 1975, it had total assets of $18,813,000 and that its majority interest in Valhi constituted $12,566,000 of such assets.

Contran states that in August of 1975, as a result of a tender offer commenced on July 21, 1975, Contran became the owner of 285,133 shares of Valhi, Inc. ("Valhi") common stock. Contran states that these shareholdings and an additional 1,000 Valhi common shares acquired in open market purchases on July 17 and 18, 1975, constitute 55.7% of the presently outstanding Valhi common stock. Contran states that Valhi is an operating company primarily engaged in diversified farming and agricultural land management activities with total assets, as of December 31, 1975, of $42,864,000.

Section 8(f) of the Act provides that whenever the Commission, on its own motion or upon application, finds that a registered investment company has ceased to be an investment company, it shall so declare by order and upon the taking effect of such order the registration of such company shall cease to be in effect. Section 8(f) of the Act further provides that if necessary for the protection of investors, such an order may be made upon appropriate conditions.

Contran asserts that it is not an investment company as defined in the Act. Section 3(a)(1) of the Act defines an investment company to mean any issuer which is or holds itself out as being engaged primarily, or proposes to engage primarily, in the business of investing, reinvesting, or trading in securities. Contran asserts that it has never been, or held itself out as being, engaged primarily in the business of investing, reinvesting, or trading in securities within the meaning of section 3(a)(1) of the Act.

In support thereof, Contran states that, prior to 1969, it was a dormant company and had not engaged in any business or investment activities. From 1969 to September 1, 1973, Contran states that its principal asset was its 62 percent common stock interest in Ward, a retail drug store chain, and that this interest represented 83 percent of its total assets. During this period, Contran also owned all of the outstanding common stock of the Clyde Campbell University Shop, Inc., Flight Proficiency Service, Inc., and Contran Realty Corp.

From September 1, 1973, the date of the Ward-Eckerd merger, through August of 1975, when Contran became a majority owner of Valhi common stock, Contran asserts that it neither primarily engaged nor held itself out as being primarily engaged in the business of investing, reinvesting, or trading in securities.

Contran states that its tender offer for Valhi common stock reflected its intention to obtain and exercise working control of Valhi, including majority representation on Valhi's board of directors. Following its acquisition of a majority interest in Valhi, Contran states that it has acted to effect this objective and that its principal officers now serve as the principal officers of Valhi and that such persons comprise a majority of the Valhi board of directors. Contran states that these persons now devote most of their time to the conduct of Valhi's operations and participate extensively in the management, administration and performance of Valhi's business activities. Contran asserts that it has no intention of disposing of any of its Valhi stockholdings.

Contran further asserts that, as a result of its sales of Eckerd securities and its acquisition of a majority interest in Valhi, the composition of its assets has changed markedly and that Contran no longer falls within the definition of investment company set forth in Section 3(a)(3) of the Act. Contran asserts that none of the proceeds from its sale of the Eckerd securities were used to acquire investment securities and that none of its present assets constitute investment securities.

Contran has filed an application under Sections 17(b) and 23(c) of the Act in connection with transactions to be effected pursuant to a settlement of certain litigation. Contran has consented to the requested order of deregistration being conditioned on the Commission's retention of such jurisdiction as it may have with respect to the settlement and these transactions.

For the reasons set forth above, Contran requests that the Commission enter an order, pursuant to Section 8(f) of the Act, declaring that it has ceased to be an investment company.

Notice is further given that any interested person may, not later than August 3, 1976, at 5:30 p.m., submit to the Commission in writing a request for a hearing on the matter accompanied by a statement as to the nature of his interest, the reasons for such request, and the issues, if any, of fact or law proposed to be controverted, or he may request that he be notified if the Commission shall order a hearing thereon. Any such communication shall be addressed: Secretary, Securities and Exchange Commision, Washington, D.C. 20549. A copy of such request shall be served personally or by mail upon Contran at the address stated above. Proof of such service (by affidavit, or in the case of an attorney-at-law, by certificate) shall be filed contemporaneously with the request.

As provided by Rule O-5 of the rules and regulations promulgated under the Act, an order disposing of the application will be issued as of course following August 3, 1976, unless the Commision thereafter orders a hearing upon request or upon the Commission's own motion. Persons who request a hearing, or advice as to whether a hearing is ordered, will receive any notices or orders issued in this matter, including the date of the hearing (if ordered) and any postponements thereof.

By the Commission.

GEORGE A. FITZSIMMONS,
Secretary.

[FR Doc.76-20697 Filed 7-16-76;8:45 am]

[Rel. No. 12597; SR-DTC-76-5]

DEPOSITORY TRUST CO.

Order Approving Proposed Rule Change Amending Certain Operating Procedures

JULY 6, 1976.

On May 21, 1976, The Depository Trust Company ("DTC"), New York, New York, submitted a proposed change to the Operating Procedures of DTC pursuant to Rule 19b-4 under the Securities Exchange Act of 1934, 15 U.S.C. 78(s) (the "Act").

In accordance with Section 19(b) of the Act and Rule 19b-4 thereunder, the rule change was published in the FEDERAL REGISTER (41 FR 23001, May 8, 1976) and the public was invited to comment thereon. Notice of the filing and an invitation for comments also appeared in Securities Exchange Act Release No. 12491 on May 28, 1976. No letters of comment were received.

As described in Securities Exchange Act Release No. 12491, the rule change permits DTC Participants to deposit at DTC the coupon form of certain DTC-eligible interchangeable corporate debt securities. The rule change is intended to encourage immobilization of corporate debt securities and to facilitate the inclusion of interchangeable debt securities in the Continuous Net Settlement System.

The Commission has reviewed the proposed rule change and finds that it is consistent with the requirements of the Act and the rules and regulations thereunder.

It is therefore ordered, Pursuant to section 19(b)(2) of the Act, that the rule change referenced above, be, and hereby is, approved.

For the Commission, by the Division of Market Regulation, pursuant to delegated authority.

GEORGE A. FITZSIMMONS,
Secretary.

[FR Doc.76-20698 Filed 7-16-76;8:45 am]

[File No. 500-1]

DIVERSIFIED INDUSTRIES, INC.

Suspension of Trading

JULY 9, 1976.

It appearing to the Securities and Exchange Commission that the summary suspension of trading in the securities of Diversified Industries, Inc., being traded on a national securities exchange or otherwise is required in the public interest and for the protection of investors;

Therefore, pursuant to section 12(k) of the Securities Exchange Act of 1934, trading in such securities on a national securities exchange or otherwise is sus-

pended, for the period from July 10, 1976 through July 19, 1976.

By the Commission.

GEORGE A. FITZSIMMONS, *Secretary.*

[FR Doc.76-20699 Filed 7-16-76;8:45 am]

[File No. 500-1]

EQUITY FUNDING CORP. OF AMERICA AND ORION CAPITAL CORP.

Suspension of Trading

JULY 9, 1976.

It appearing to the Securities and Exchange Commission that the summary suspension of trading in the securities of Equity Funding Corporation of America, including Orion Capital Corporation, being traded on a national securities exchange or otherwise, is required in the public interest and for the protection of investors;

Therefore, pursuant to section 12(k) of the Securities Exchange Act of 1934, trading in such securities on a national securities exchange or otherwise is suspended, for the period from July 10, 1976 through July 19, 1976.

By the Commission.

GEORGE A. FITZSIMMONS, *Secretary.*

[FR Doc.76-20700 Filed 7-16-76;8:45 am]

[Rel. No. 9345; 812-3809]

MERRILL LYNCH READY ASSETS TRUST ET AL.

Filing of Application for an Order Exempting Certain Transactions

JULY 8, 1976.

Notice is hereby given that Merrill Lynch Ready Assets Trust, previously Lionel D. Edie Ready Assets Trust (the "Trust"), Merrill Lynch Asset Management, Inc. ("MLAM") and Merrill Lynch Government Securities, Inc. ("GSI") (collectively referred to as "Applicants"), One Liberty Plaza, 165 Broadway, New York, New York 10006, filed an application on May 12, 1975, and amendments thereto on June 1, and June 25, 1976, pursuant to sections 6(c) and 17(b) of the Investment Company Act of 1940 (the "Act"), for an order of the Commission for an exemption to permit the Trust and MLAM to engage in certain principal transactions with GSI in the manner and subject to the conditions summarized below. All interested persons are referred to the application on file with the Commission for a statement of the representations contained therein, which are summarized below.

The Trust is a diversified open-end management investment company and is registered under the Act. The Trust is a so-called money market trust seeking preservation of capital, liquidity, and the highest possible income consistent with the foregoing objectives available from the short-term money market securities in which the Trust invests. Such money market securities will principally consist of short-term United States Government securities, Government agency securities, bank money instruments such as certificates of deposit and bankers' acceptances and corporate debt instruments including commercial paper. At December 31, 1975, the total assets of the Trust were approximately $85 million, of which approximately $50 million (59 percent) consisted of certificates of deposit; $5 million (5.8 percent), commercial paper; $2 million (2.3 percent), bankers' acceptances; $2 million (2.3 percent), U.S. Government securities; and $25.7 million (30 percent), Government agency securities.

MLAM is a newly organized, wholly-owned subsidiary of Merrill Lynch and Co., Inc. and is registered as an investment adviser under the Investment Advisers Act of 1940. On June 15, 1976, MLAM, pursuant to a vote of the shareholders of the Trust, entered into an investment advisory agreement with the Trust containing terms substantially similar to those in the Trust's previous agreement with Edie Management Services, another wholly-owned subsidiary of Merrill Lynch and Co., Inc. (which was sold on that date to an Employee Stock Ownership Trust formed for the benefit of Edie employees), except that the advisory fee, which had been ½ of 1% of average net assets, is scaled down at asset levels above $500 million.

Merrill Lynch, Pierce, Fenner & Smith Incorporated ("Merrill Lynch") which is a wholly-owned subsidiary of Merrill Lynch & Co., Inc., is the sponsor of the Trust.

The application states that GSI, which is a wholly-owned subsidiary of Merrill Lynch & Co., Inc., is one of the largest dealers in United States Government securities, Government agency securities and money market securities.

GSI and MLAM are "affiliated persons" of the Trust and of each other within the meaning of such term contained in section 2(a)(3) of the Act. Applicants state that GSI and MLAM operate as completely separate entities under the umbrella of the Merrill Lynch holding company. While such corporations are under common control, they each have their own separate officers and employees, each is separately capitalized and each maintains its own separate books and records and operates as an independent profit center.

Section 17(a) of the Act, in pertinent part, provides that it shall be unlawful for any affiliated person of a registered investment company, or any affiliated person of such a person, acting as principal, knowingly to sell to or purchase from such registered company, or any company controlled by such registered company, any security, or other property. Because of the above-described affiliation of GSI with the Trust, the Trust is prohibited from making purchases from or sales to GSI of securities in transactions in which GSI acts as principal.

Section 17(b) of the Act provides, however, that the Commission, upon application, may exempt a transaction from the provisions of section 17(a) if evidence establishes that the terms of the proposed transaction, including the consideration to be paid, are reasonable and fair and do not involve overreaching on the part of any person concerned, and that the proposed transaction is consistent with the policy of the registered investment company concerned and with the general purposes of the Act.

Section 6(c) provides that the Commission may conditionally or unconditionally exempt any person, security or transaction, or any class or classes of persons, securities, or transactions, from any provision or provisions of the Act or of any rule or regulation thereunder, if and to the extent that such exemption is necessary or appropriate in the public interest and consistent with the protection of investors and the purposes fairly intended by the policy and provisions of the Act.

The portfolio securities in which the Trust may invest are limited to money market securities. The rationale behind the application is based upon the specialized nature of the so-called money market in which such securities are traded and the special requirements of the Trust with respect to its portfolio transactions.

Applicants represent that the money market is a term applied to the large pools of relatively risk-free, short-term, debt-oriented securities loosely defined as money market securities or instruments. Average daily trading in the money market approximates $5 billion. Such securities are generally traded in large amounts. Practically all trading in money market securities takes place in an over-the-counter market which is comprised of a group of dealer firms largely consisting of major securities firms and large banks (primarily the 27 Government securities dealers (one of which is GSI) who report their daily position and trading to the Federal Reserve Bank of New York). The dealers usually are acting as principal for their own account. Money market securities are generally traded on a net basis and do not normally involve either brokerage commissions or transfer taxes. The cost of portfolio securities transactions of the Trust primarily consists of dealer or underwriter spreads. There are no clearly defined spreads. Spreads generally do not exceed ¼ percent and decline on larger amounts. A typical spread for a transaction of the Trust is ⅛ percent.

Applicants assert that the above indicated breadth of the money market is somewhat misleading. There is a great variety of types of money market securities and the money market tends to be highly segmented. The character of the market for a particular security will vary widely in terms of price, volatility, liquidity and availability. There are significant fluctuations in yield among the various types of securities and even within the various types depending upon the maturity date and the quality of the issuer.

Applicants further state that access to this market depends solely on access to the dealers and this access can only be

obtained by being a participating customer of the dealers and thereby obtaining realistic quotations. Best price and execution is normally achieved by obtaining competitive quotations from the competitive retail dealers with respect to a particular security.

GSI asserts that, based on figures released by the Federal Reserve Bank of New York, it believes itself to be one of the three largest competitive retail dealers in the money market. Being competitive means that such dealer has the security in inventory and is in a position to quote favorable prices with respect thereto. Average daily volume of trading by GSI in money market securities is in the area of $750 million and on some days its volume exceeds $1 billion. GSI's average share of the money market trading is at least 15 percent of the total.

The application states that, subject to policy estabilshed by the Trustees and officers of the Trust, MLAM is primarily responsible for the Trust's portfolio decisions and placing of the Trust's portfolio transactions. The Trust has no obligation to deal with any dealer or group of dealers in the execution of its portfolio transactions. In placing orders, it is the policy of the Trust to obtain the best prices and execution for its transactions. The Trust's policy of investing in securities with short maturities and its utilization of various yield improvement techniques results in high portfolio turnover. The investment policies of the Trust, the nature of the money market and the fact that the Trust shares are redeemable require rapid acquisition and disposition of portfolio securities. To illustrate the degree of the portfolio activity of the Trust, during the period from February 19, 1975 to December 31, 1975, the purchases of money market securities by the Trust amounted to $819,082,378 and sales and maturities amounted to $734,451,474. Included therein were purchases, and sales and maturities, of U.S. Government and Government agency securities of $117,092,236 and $91,424,351, respectively.

In summary, the Trust and the adviser (MLAM) believe access to GSI is highly desirable for four reasons:

1. The Trust's special requirements result in high portfolio activity and a need to make rapid purchases and sales of securities in the money market.

2. GSI is such a major factor in the money market that being unable to deal directly with GSI may, upon occasion, deprive the Trust of obtaining best price and execution, especially in the disposition of portfolio securities in weak markets.

3. The money market is highly competitive and removing a competitive factor as important as GSI from the market may deprive the Trust of best price and execution even when dealing with other dealers.

4. The dealers function as the information sources in the money market and being deprived of dealing with GSI removes the Trust from one major information source. The application asserts that it is the belief of the Board of Trustees of the Trust that being unable to engage in principal transactions with a major dealer such as GSI may act to the detriment of the Trust. At the same time, however, the Board is mindful of the potential conflicts of interest posed by conducting principal transactions with an affiliate. The Audit Committee of the Board has reviewed and the Trustees have approved the plan proposed by the application which, if granted, would permit the Trust to conduct principal transactions with GSI under conditions and subject to controls designed to insure that the terms of each proposed transaction will be fair and reasonable and not involve overreaching on the part of any person concerned and to eliminate the possibility of abuses of the potential conflicts of interest.

The provisions of the proposed plan are as follows:

(1) The exemption will only apply to the short-term United States Government securities and Government agency securities in which the Trust may invest. These securities are all exempt securities under Section 3(a)(2) under the Securities Act of 1933 and generally, because of their Government backing, involve less risk than the other types of money market securities in which the Trust may invest. The market for Government and Government agency securities has more depth and liquidity and is subject to less volatility than other types of money market securities and, therefore, presents less potential for abuse of the inherent conflicts of interest.

(2) All transactions will originate with the Trust or MLAM and not with GSI. No solicitations will be made of the Trust or MLAM by GSI. In discussions with respect to proposed transactions between the Trust and GSI, GSI personnel will confine their activities to the response to inquiries from the Trust or MLAM concerning available inventory, ideas as to advantageous trades and other money market information. Neither Merrill Lynch nor Merrill Lynch & Co., Inc. will have any involvement with respect to proposed transactions between the Trust and GSI and neither will attempt to influence or control in any way the placing by the Trust or MLAM of orders with GSI.

(3) Before any transaction will be executed with GSI, the Trust or MLAM will obtain such information as they deem necessary to determine the most favorable price (as defined in (4) below) available with respect to the transaction. Before any transaction will be executed with GSI, the Trust or MLAM must check at least three other dealers to obtain a competitive quotation. With respect to prospective purchases of securities, these dealers must be those who have money market securities of the categories and the type desired in their inventory and who are in a position to quote favorable prices with respect thereto. With respect to the prospective disposition of securities, these dealers must be those who in the experience of the Trust are in a position to quote favorable prices.

(4) A determination will be required in each instance, based upon the information available to the Trust and MLAM, that the price available from GSI is "better than" that available from other sources. To be considered better than the quotation from other sources, the GSI quotation must be at least one basis point better than that available from other sources if the quotation is made in terms of yield basis; if the quotation is made in terms of a dollar price, it must be at least 1/64 of a dollar better than the quotation from other sources.

Applicants assert that such a standard is consistent with the application's other safeguards. The application applies only to United States Government and Government agency securities where spreads between dealers are much narrower than with respect to other money market instruments. Treasury bills with a six month maturity generally have, according to the application, a maximum spread of two basis points and a majority of the trades are with a one basis point spread or less, since dealers eliminate any greater differentials by trading among themselves. Applicants, therefore, assert that even a two basis point spread would eliminate most opportunities for business and that, given the current competitive state of the market, a one basis point standard will be a tough but fair test.

(5) GSI's dealer spread in regard to any transaction with the Trust will be no greater than its customary dealer spread, which in turn will be consistent with the average or standard spread charged by dealers in money market securities for the type of security and the size of transaction involved.

(6) The exemption will be made subject to any regulations promulgated by the Securities and Exchange Commission under Section 11(a)(2)(B) of the Securities Exchange Act of 1934 which would otherwise prohibit or restrict in any way the ability of the Trust and/or its investment adviser to conduct principal transactions with GSI.

(7) The exemption will be valid only so long as MLAM and GSI operate as separate entities within the holding company framework of Merrill Lynch & Co., Inc. with their own separate officers and employees, separate capitalization and separate books and records.

(8) The Trust and MLAM will maintain records with respect to their transactions with GSI including documentation of having obtained quotations from at least three other dealers with respect to each transaction. A schedule of all transactions with GSI will be filed with the periodic reports (N-1Q) filed by the Trust with the Commission under the Act.

(9) The Law Department of Merrill Lynch will prepare guidelines for GSI personnel to make certain that the no-solicitation policy is followed, that the Trust receives rates as favorable as other institutional purchasers buying in the same quantities and that the parties maintain arm's-length relationships. The Law Department will periodically

monitor the activities of GSI in this regard to make certain that the above policy is adhered to.

(10) The Audit Committee of the Board of Trustees of the Trust consisting of the independent Trustees will prepare guidelines for the Trust and MLAN to make certain that the Trust is obtaining best price and execution with respect to any transactions with GSI and that the above procedures are followed in all respects. The Audit Committee will periodically monitor the activities of the Trust and MLAN in this regard to insure that these matters are being accomplished.

Applicants believe that the granting of this application will provide the Trust access to the money market necessary to insure best price and execution in the case of U.S. Government and Government agency securities and will provide the Trust and MLAM with an important new information source in the money market and thereby will work to the benefit of the shareholders of the Trust. Applicants believe that the procedures to be followed with respect to transactions with GSI are structured in such a way as to insure that such transactions will be in all instances reasonable and fair and will not involve overreaching on the part of any person concerned and that such exemption is appropriate in the public interest and consistent with the protection of investors and the purposes fairly intended by the policy and provisions of the Act.

Applicants therefore request that an order be entered, pursuant to sections 6(c) and 17(b) of the Act, exempting the Trust from section 17(a) of the Act to permit principal transactions between the Trust and GSI in accordance with the terms and conditions set forth herein.

Notice is further given that any interested person may, not later than August 2, 1976, at 5:30 p.m., submit to the Commission in writing a request for a hearing on the matter accompanied by a statement as to the nature of his interest, the reason for such request, and the issues, if any, of fact or law proposed to be controverted, or he may request that he be notified if the Commission shall order a hearing thereon. Any such communication should be addresed: Secretary, Securities and Exchange Commission, Washington, D.C. 20549. A copy of such request shall be served personally or by mail upon Applicants at the address stated above. Proof of such service (by affidavit, or in case of an attorney-at-law, by certificate) shall be filed contemporaneously with the request. As provided by rule 0-5 of the rules and regulations promulgated under the Act, an order disposing of the application will be issued as of course following said date unless the Commission thereafter orders a hearing upon request or upon the Commission's own motion. Persons who request a hearing, or advice as to whether a hearing is ordered, will receive any notices and orders issued in this matter, including the date of the hearing (if ordered) and any postponements thereof.

For the Commission, by the Division of Investment Management, pursuant to delegated authority.

GEORGE A. FITZSIMMONS,
Secretary.

[FR Doc.76-20701 Filed 7-16-76;8:45 am]

[Rel. No. 12579; File No. SR-MSTC 75-2]

MIDWEST SECURITIES TRUST CO.

Order Approving Rule Change Providing for the Establishment of a Transfer Agent Custodian Program

JULY 6, 1976.

On October 30, 1975, the Midwest Securities Trust Company ("MSTC"), a wholly-owned subsidiary of the Midwest Stock Exchange, Inc., 120 South LaSalle Street, Chicago, Illinois 60603, submitted a proposed rule change pursuant to Rule 19b-4 under the Securities Exchange Act of 1934 (the "Act") setting forth the procedures for its Transfer Agent Custodian Program (the "TAC Program"). The TAC Program permits the depository to retain a working supply of certificates only while depositing securities evidenced by the remaining certificates with the transfer agent bank to be held in custody in the form of a balance certificate registered in the name of MSTC's nominee. In connection with the proposed rule change, MSTC requested that the Commission continue its previous finding pursuant to paragraph (g) of Rules 8c-1 and 15c2-1 under the Act that the agreements, provisions and safeguards established by MSTC are adequate for the protection of investors.

In accordance with section 19(b) of the Act and Rule 19b-4 thereunder, the rule change was published in the FEDERAL REGISTER (40 FR 52772, November 12, 1975), and the public was invited to submit comments until December 3, 1975. Notice of the filing and an invitation for comments also appeared in Securities Exchange Act Release No. 34-11800, November 6, 1975. No letters of comment were received.

In connection with its review of the submission, the Commission requested representations from MSTC concerning the operation of the TAC Program. The representations were made in a letter from MSTC dated July 2, 1976 which was incorporated in the MSTC submission and included in the public file.

The Commission has reviewed the MSTC submission and finds that the agreements, provisions and safeguards established by MSTC are adequate for the protection of investors. The Commission finds also that the proposed rule change is consistent with the requirements of the Act and the rules and regulations thereunder applicable to registered clearing agencies.

It is therefore ordered, Pursuant to Section 19(b)(2) of the Act, that the proposed rule change contained in File No. SR-MSTC-75-2 be, and hereby is, approved.

For the Commission by the Division of Market Regulation, pursuant to delegated authority.

GEORGE A. FITZSIMMONS,
Secretary.

[FR Doc.76-20702 Filed 7-16-76;8:45 am]

PHILADELPHIA STOCK EXCHANGE

Application for Unlisted Trading Privileges and of Opportunity for Hearing

JULY 9, 1976.

The above named national securities exchange has filed an application with the Securities and Exchange Commission pursuant to section 12(f)(1)(B) of the Securities Exchange Act of 1934 and Rule 12f-1 thereunder, for unlisted trading privileges in the security of the company as set forth below, which security is listed and registered on one or more other national securities exchanges:

Bankamerica Corporation, Common Stock, $3.125 Par Value, File No. 7-4846.

Upon receipt of a request, on or before July 25, 1976 from any interested person, the Commission will determine whether the application with respect to the company named shall be set down for hearing. Any such request should state briefly the title of the security in which he is interested, the nature of the interest of the person making the request, and the position he proposes to take at the hearing, if ordered. In addition, any interested person may submit his views or any additional facts bearing on the said application by means of a letter addressed to the Secretary, Securities and Exchange Commission, Washington, D.C., 20549 not later than the date specified. If no one requests a hearing with respect to the application, such application will be determined by order of the Commission on the basis of the facts stated therein and other information contained in the official files of the Commission pertaining thereto.

For the Commission, by the Division of Market Regulation, pursuant to delegated authority.

GEORGE A. FITZSIMMONS,
Secretary.

[FR Doc.76-20703 Filed 7-16-76;8:45 am]

[Rel. No. 19607; 70-5876]

SOUTHERN CO.

Proposal by Holding Company To Act as Surety on Supersedeas Bond

JULY 8, 1976.

Notice is hereby given that The Southern Company ("Southern"), Perimeter Center East, P.O. Box 720071, Atlanta, Georgia 30346), a registered holding company, has filed a declaration with this Commission pursuant to the Public Utility Holding Company Act of 1935 ("Act"), designating section 12(b) and (f) of the Act and Rule 45 promulgated thereunder as applicable to the following proposed transaction. All interested persons are referred to the declaration,

which is summarized below, for a complete statement of the proposal.

On June 25, 1976, the Alabama Public Service Commission entered an order denying an application for rate relief by Alabama Power Company ("Alabama"), an electric utility subsidiary of Southern. Alabama has filed a notice of appeal to the Circuit Court of Montgomery County, Alabama from that order, and plans to petition such court for authority to place the requested rate increase in effect under supersedeas bond pending the outcome of its appeal.

Southern states that, under Alabama law, as a condition precedent to placing the contested rate increase in effect subject to refund, a bond must be furnished in double the estimated approximate amount by which revenues would be increased in six months by reason of the increased rates sought. Two or more sureties are required on the bond. Additional bond on like conditions must be provided each six months as long as the appeal is pending and the supersedeas in effect. Southern further states that the revenue increase sought by Alabama will approximate $62,480,000 for the first six months supersedeas period, which would require a bond of $124,960,000 in amount.

In order for Alabama to avoid the substantial premium costs (estimated at $50,000 for the first six months supersedeas period) attendant uopn use of a commercial surety, Southern proposes to act as one of the two required sureties on the supersedeas bond for the revenues during the initial six-month period and to execute as surety such further bonds or renewals or extensions as may be required to permit Alabama to keep the proposed rates in effect until the questions raised in its appeal have been finally determined. No fee, premium or other compensation will be paid Southern to act as surety. Joseph M. Farley, President of Alabama, will act as the second surety on the bonds.

A statement of the fees, commissions and expenses paid or incurred in connection with the proposal will be supplied by amendment. Southern states that no State or Federal commission, other than this Commission, has jurisdiction over the proposed transaction.

Notice is further given that any interested person may, not later than July 29, 1976, request in writing that a hearing be held on such matter, stating the nature of his interest, the reasons for such request, and the issue of fact or law raised by said declaration which he desires to controvert; or he may request that he be notified if the Commission should order a hearing thereon. Any such request should be addressed: Secretary, Securities and Exchange Commission, Washington, D.C. 20549. A copy of such request should be served personally or by mail upon the declarant at the above-stated address, and proof of service (by affidavit or, in case of an attorney at law, by certificate) should file with the request. At any time after said date, the declaration, as filed or as it may be amended, may be permitted to become effective as provided in rule 23 of the general rules and regulations promulgated under the Act, or the Commission may grant exemption from its rules as provided in Rules 20(a) and 100 thereof or take such other action as it may deem appropriate. Persons who request a hearing or advice as to whether a hearing is ordered will receive any notices and orders issued in this matter, including the date of the hearing (if ordered) and any postponements thereof.

For the Commission, by the Division of Corporate Regulation, pursuant to delegated authority.

GEORGE A. FITZSIMMONS,
Secretary.

[FR Doc.76-20704 Filed 7-16-76;8:45 am]

[Rel. No. 19606; 70-5741]

SOUTHWESTERN ELECTRIC POWER CO.

Proposed Acquisition of Rail Cars by Lease and Issuance of Loan Guarantees; Request for Exception

JULY 8, 1976.

Notice is hereby given that Southwestern Electric Power Company ("SWEPCO"), P.O. Box 1106, Shreveport, Louisiana 71156, an electric utility subsidiary company of Central and South West Corporation, a registered holding company, has filed post-effective amendments to its application-declaration previously filed with this Commission pursuant to the Public Utility Holding Company Act of 1935 ("Act") designating sections 6(a), 7, 9(a) and 10 and Rule 50 promulgated thereunder as applicable to the following proposed transactions. All interested persons are referred to the application-declaration, as further amended by said post-effective amendments, for a complete statement of the proposed transactions.

By order dated April 6, 1976 (HCAR No. 19468) issued in this proceeding, SWEPCO was authorized to acquire, construct and operate a unit train repair shop near Alliance, Nebraska. The shop is to be used for the maintenance and repair of railroad cars to be used for the transportation of coal to SWEPCO generating plants. The order stated that and financing, leasing or conditional purchase arrangements of the shop would be the subject of further order by the Commission.

SWEPCO has now filed post-effective amendments proposing (i) the acquisition of 363 gondola rail cars and (ii) the leasing of the shop and the cars (collectively, the "project") as described further below.

SWEPCO proposes to enter into a Participation Agreement ("agreement") dated as of July 1, 1976, among it, City Island Coal Company (the "lessor") and an institutional investor (the "lender"). The agreement will obligate SWEPCO to convey its interest in the project to the lessor on the closing date of the transaction. As explained further below, SWEPCO will then lease the project back from the lessor.

Under the agreement, the lessor will issue and sell a $14,600,000 principal amount 9⅜% nonrecourse note due August 1, 1996 ("note") to the lender. Proceeds of the note will be used by the lessor to reimburse SWEPCO for its expenses incurred towards the acquisition and construction of the project and to complete such acquisition and construction.

The note is to be a limited, nonrecourse obligation of the lessor, payable solely from rentals received under the lease and any money held by the lessor as proceeds from the sale of the note. The note will be unconditionally guaranteed as to principal, premium and interest by SWEPCO.

The note will be subject to redemption at SWEPCO's option at redemption prices equal to the principal amount plus one year's interest if redeemed during the 12-month period beginning August 1, 1976, and declining by equal increments to 100% of principal amount if redeemed during the 12-month period beginning August 1, 1995. No optional redemption may be made prior to August 1, 1986 in connection with any refunding of the note at an interest cost of less than the interest rate borne by the note. The note is also subject to mandatory redemption at par plus accrued interest upon any extraordinary lease termination in connection with casualty losses, condemnations or similar events under the lease.

SWEPCO and the lessor will enter into a lease ("lease") under which the lessor will lease the project to SWEPCO for a term extending until August 1, 1996. SWEPCO will pay semiannual base rentals of $814,763.19 which will be sufficient to pay the installments of principal and interest on the note. SWEPCO also is obligated to pay supplemental rentals to cover all of the lessor's expenses and costs in connection with the project as well as other liabilities and obligations assumed by SWEPCO under the lease. The lease is a net lease under which SWEPCO agrees, among other things, to pay all taxes and charges on the project assessed against the lessor.

Under the lease, SWEPCO is obligated in the event of any damage, casualty, loss, destruction, condemnation or taking by eminent domain with respect to a project component which materially adversely affects the usefulness thereof to SWEPCO, either (i) to replace, rebuild or restore such component or (ii) to terminate the lease with respect to such component. Upon any such termination, SWEPCO is obligated to purchase the component at its then "termination value," as determined under the lease. The lease also enumerates various events of default and specifies remedies which may be taken by the lessor upon the occurrence thereof. Such remedies include the right to take possession of project components, lease project components to others or the right to require SWEPCO to purchase project components at their then termination value.

The lease gives SWEPCO the option at any time prior to February 1, 1996, to repurchase any project component by

the assumption of partial liability, on a pro rata basis, on the notes, such partial liability to be in that proportion which the termination value of such project component bears to the termination value of the entire project.

SWEPCO states that it intends to include the full amout of its lease rental payments in determining its fuel costs for purposes of the fuel cost adjustment clauses in its rates, subject to applicable regulatory authorities. SWEPCO also states that the project does not fall within the allowable categories of bondable property under SWEPCO's First Mortgage Indenture.

SWEPCO requests an exception from the competitive bidding requirements of Rule 50, pursuant to section (a)(5) thereof, for the issuance of its guarantees under the agreement.

It is stated that no state commission and no federal commission, other than this Commission, has jurisdiction over the proposed transaction. Fees and expenses to be incurred in connection with the proposed transaction are to be supplied by amendment.

Notice is further given that any interested person may, not later than August 2, 1976, request in writing that a hearing be held on such matter, stating the nature of his interest, the reasons for such request, and the issues of fact or law raised by said application-declaration, as further amended by said post-effective amendments, which he desires to controvert; or he may request that he be notified if the Commission should order a hearing thereon. Any such request should be addressed: Secretary, Securities and Exchange Commission, Washington, D.C. 20549. A copy of such request should be served personally or by mail upon the applicant-declarant at the above-stated address, and proof of service (by affidavit or, in case of an attorney at law, by certificate) should be filed with the request. At any time after said date, the application-declaration, as amended by said post-effective amendments or as it may be further amended, may be granted and permitted to become effective as provided in Rule 23 of the General Rules and Regulations promulgated under the Act, or the Commission may grant exemption from such rules as provided in Rules 20(a) and 100 thereof or take such other action as it may deem appropriate. Persons who request a hearing or advice as to whether a hearing is ordered will receive any notices and orders issued in this matter, including the date of the hearing (if ordered) and any postponements thereof.

For the Commission, by the Division of Corporate Regulation, pursuant to delegated authority.

GEORGE A. FITZSIMMONS,
Secretary.

[FR Doc.76-20705 Filed 7-16-76;8:45 am]

SMALL BUSINESS ADMINISTRATION

[Declaration of Disaster Loan Area #1264]

KANSAS

Declaration of Disaster Area

Labette, Montgomery, and adjacent counties within the State of Kansas constitute a disaster area because of damage resulting from flooding on July 2 and 3, 1976. Eligible persons, firms and organizations may file applications for loans for physical damage until the close of business on September 9, 1976, and for economic injury until the close of business on April 11, 1977, at:

Small Business Administration, District Office, Main Place Building, 110 East Waterman Street, Wichita, Kansas 67202.

or other locally announced locations.

Dated: July 9, 1976.

MITCHELL P. KOBELINSKI,
Administrator.

[FR Doc.76-20743 Filed 7-16-76;8:45 am]

INTERSTATE COMMERCE COMMISSION

[Notice No. 94]

ASSIGNMENT OF HEARINGS

JULY 14, 1976.

Cases assigned for hearing, postponement, cancellation or oral argument appear below and will be published only once. This list contains prospective assignments only and does not include cases previously assigned hearing dates. The hearings will be on the issues as presently reflected in the Official Docket of the Commission. An attempt will be made to publish notices of cancellation of hearings as promptly as possible, but interested parties should take appropriate steps to insure that they are notified of cancellation or postponements of hearings in which they are interested.

MC 134035 (Sub-No. 14), Douglas Trucking Co., Inc., now assigned August 23, 1976, at Los Angeles, Calif. is postponed indefinitely.

MC 118142 (Sub 114), M. Bruenger & Co., Inc. now being assigned July 26, 1976 (2 days), at Denver, Colorado and will be held in Room 158, U.S. Customs House, 721 19th Street.

MC 130342, Consolidated Tours, Inc., now assigned July 19, 1976, at St. Paul, Minn. is postponed to July 20, 1976, at St. Paul, Minn. (4 days), at Court Room 2, Federal Building & U.S. Courthouse, 316 North Robert Street.

MC 141844, Grady County Farm Lines, Inc., now being assigned September 20, 1976 (1 day), at Louisville, Ky., in a hearing room to be later designated.

MC 117956 (Sub 10), Scott Transfer Co., Inc. now being assigned September 23, 1976 at the Offices of the Interstate Commerce Commission in Washington, D.C.

MC 4405 Sub 531, Dealers Transit, Inc., now being assigned September 28, 1976 (1 day), at Chicago, Ill., in a hearing room to be later designated.

MC 114211 Sub 259, Warren Transport, Inc., now being assigned September 29, 1976 (1 day), at Chicago, Ill., in a hearing room to be later designated.

MC 116273 Sub 201, D & L. Transport, Inc., now being assigned September 30, 1976 (2 days), at Chicago, Ill., in a hearing room to be later designated.

AB 19 (Sub-No. 23), The Winchester and Potomac Railroad Company and Baltimore and Ohio Railroad Company Abandonment Portion Shenandoah Branch Between Millville, West Virginia and Stephenson, Virginia and Clarke County, Virginia now assigned September 15, 1976, at Charles Town, West Virginia is canceled and application dismissed.

MC 134922 Sub 165, B. J. Mcadams, Inc., now being assigned August 23, 1976 (2 days), at Los Angeles, Calif., in a hearing room to be later designated.

MC 141743, Mark LV Charter Lines, Inc., now being assigned August 25, 1976 (3 days), at Los Angeles, Calif., in a hearing room to be later designated.

MC 99952 Sub 5, Eagle Truck Lines, Inc., now being assigned August 30, 1976 (1 week), at Los Angeles, Calif., in a hearing room to be later designated.

I & S M 29089, Increased Bus Passenger Fares and Express Rates Nationwide, now being assigned August 24, 1976, at the Offices of the Interstate Commerce Commission, Washington, D.C.

MC 138926 (Sub 5), Gencom, Inc. now being assigned November 2, 1976 (1 day), at Kansas City, Missouri in a hearing room to be later designated.

MC 133655 (Sub 89), Trans-National Truck, Inc. now being assigned November 3, 1976 (1 day), at Kansas City, Missouri in a hearing room to be later designated.

MC 118178 (Sub 25), Bill Meeker now being assigned November 4, 1976 (2 days), at Kansas City, Missouri in a hearing room to be later designated.

MC 110563 (Sub 175), Coldway Food Express, Inc. now being assigned November 8, 1976 (1 day), at St. Louis, Missouri in a hearing room to be later designated.

MC 123407 (Sub 294), Sawyer Transport, Inc. now being assigned November 9, 1976 (1 day), at St. Louis, Missouri in a hearing room to be later designated.

MC 19157 (Sub 20), McCormack's Highway Transportation, Inc., MC 19945 (Sub 54), Behnken Truck Service, Inc., MC 29079 (Sub 84), Brada Miller Freight System, Inc., MC 29886 (Sub 328), Dallas & Mavis Forwarding Co., Inc., MC 61592 (Sub 380), Jenkins Truck Line, Inc.

MC 66886 (Sub 48), Belger Cartage Service, Inc., MC 83539 (Sub 418), C & H Transportation Co., Inc., MC 87103 (Sub 20), Miller Transfer and Rigging Co., MC 105045 (Sub 59), R. L. Jeffries Trucking Co., Inc., MC 106497 (Sub 128), Parkhill Truck Company, MC 106644 (Sub 216), Superior Trucking Company, Inc., MC 107445 (Sub 9), Underwood Machinery Transport, Inc., MC 108119 (Sub 46), E. L. Murphy Trucking Co., MC 108341 (Sub 41), Moss Trucking Company, Inc., MC 109448 (Sub 20), Parker Transfer Company, MC 111545 (Sub 218), Home Transportation Company, Inc., MC 112304 (Sub 104), Ace Doran Hauling & Rigging Co., MC 113855 (Sub 337), International Transport, Inc., MC 114211 (Sub 256), Warren Transport, Inc., MC 115554 (Sub 14), Scott's Transportation Service, Inc., MC 116915 (Sub 25), Eck Miller Transportation Corporation, MC 117574 (Sub 267), Daily Express, Inc., MC 119777 (Sub 326), Ligon Specialized Hauler, Inc., MC 124947 (Sub

46), Machinery Transports, Inc., MC 125433 (Sub 68), F-B Truck Line Company, MC 126904 (Sub 15), H. C. Parrish Truck Service, Inc., and MC 13123 (Sub 83), Wilson Freight Company and MC 138144 (Sub 8), Fred Olson Co., Inc. now being assigned November 10, 1976 (3 days) at St. Louis, Missouri in a hearing room to be later designated.

ROBERT L. OSWALD,
Secretary.

[FR Doc.76-20836 Filed 7-16-76;8:45 am]

FOURTH SECTION APPLICATION FOR RELIEF

JULY 14, 1976.

An application, as summarized below, has been filed requesting relief from the requirements of Section 4 of the Interstate Commerce Act to permit common carriers named or described in the application to maintain higher rates and charges at intermediate points than those sought to be established at more distant points.

Protests to the granting of an application must be prepared in accordance with Rule 40 of the general rules of practice (49 CFR 1100.40) and filed on or before August 3, 1976. FSA No. 43194—*Rubber to Bristol, Pennsylvania.* Filed by Southwestern Freight Bureau, Agent, (No. B-611), for interested rail carriers. Rates on rubber, etc., in carloads, as described in the application, from points in Louisiana and Texas, to Bristol, Pennsylvania.

Grounds for relief—Rate relationship.
Tariff—Supplement 24 to Southwestern Freight Bureau, Agent, tariff 13-F, I.C.C. No. 5209. Rates are published to become effective on August 13, 1976.

By the Commission.

ROBERT L. OSWALD,
Secretary.

[FR Doc.76-20837 Filed 7-16-76;8:45 am]

[Notice No. 88]

MOTOR CARRIER TEMPORARY AUTHORITY APPLICATIONS

JULY 13, 1976.

The following are notices of filing of applications for temporary authority under section 210a(a) of the Interstate Commerce Act provided for under the provisions of 49 CFR 1131.3. These rules provide that an original and six (6) copies of protests to an application may be filed with the field official named in the Federal Register publication no later than the 15th calendar day after the date the notice of the filing of the application is published in the Federal Register. One copy of the protest must be served on the applicant, or its authorized representative, if any, and the protestant must certify that such service has been made. The protest must identify the operating authority upon which it is predicated, specifying the "MC" docket and "Sub" number and quoting the particular portion of authority upon which it relies. Also, the protestant shall specify the service it can and will provide and the amount and type of equipment it will make available for use in connection with the service contemplated by the TA application. The weight accorded a protest shall be governed by the completeness and pertinence of the protestant's information.

Except as otherwise specifically noted, each applicant states that there will be no significant effect on the quality of the human environment resulting from approval of its application.

A copy of the application is on file, and can be examined at the Office of the Secretary, Interstate Commerce Commission, Washington, D.C., and also in the I.C.C. Field Office to which protests are to be transmitted.

MOTOR CARRIERS OF PROPERTY

No. MC 78787 (Sub-No. 50TA), filed June 30, 1976. Applicant: PACIFIC MOTOR TRUCKING COMPANY, 9 Main St., San Francisco, Calif. 94105. Applicant's representative: John MacDonald Smith, 1 Market Plaza, Suite 813, San Francisco, Calif. 94105. Authority sought to operate as a *contract carrier*, by motor vehicle, over irregular routes, transporting: (1) *New automobiles*, in initial movements, in truckaway and driveaway service, from General Motors assembly plants at Fremont, Los Angeles, and South Gate, Calif., to points in Arizona, and points in Nevada (except Austin, Battle Mountain, Carlin, Carson City, Elko, Fallon, Hawthorne, Lovelock, Mina, Minden, Montello, Reno, Tanapah, Wells, Winnemucca and Yerington; and points in Oregon within the Counties of Coos, Curry, Douglas, Jackson, Josephine, Lane and Klamath; and (2) *New automobiles*, in secondary movements, in truckaway service, from railhead ramps in Phoenix, Ariz., to points in California, under a continuing contract with General Motors Corporation, for 180 days. Applicant has also filed an underlying ETA seeking up to 90 days of operating authority. Supporting shipper: General Motors Corporation, GM Logistics Operations, 30007 Van Dyke, Warren, Mich. 48090. Send protests to: Claud W. Reeves, District Supervisor, 450 Golden Gate Ave., Box 36004, San Francisco, Calif. 94102.

No. MC 113362 (Sub-No. 298TA), filed July 6, 1976. Applicant: ELLSWORTH FRIGHT LINES, INC., 310 East Broadway, Eagle Grove, Iowa 50533. Applicant's representative: Milton D. Adams, P.O. Box 562, Austin, Minn. 55912. Authority sought to operate as a *common carrier*, by motor vehicle, over irregular routes, transporting: *Meat, meat products, meat by-products, articles* distributed by meat packing plants *and foodstuffs* (except hides and commodities in bulk), from the plantsite and/or warehouse facilities utilized by Geo. A. Hormel & Co., at or near Ottumva, Iowa, to points in Arkansas, Connecticut, Delaware, Illinois, Indiana, Kansas, Kentucky, Louisiana, Maine, Maryland, Massachuetts, Michigan, Minnesota, Missouri, Mississippi, New Jersey, New Hampshire, New York, Nebraska, North Dakota, Ohio, Oklahoma, Pennsylvania, Rhode Island, South Dakota, Texas, Vermont, West Virginia, Wisconsin, Virginia and the District of Columbia, restricted to traffic originating at named origin and destined to named states, for 180 days. Supporting shipper: Geo. A. Hormel & Co., P.O. Box 800, Austin, Minn. 55912. Send protests to: Herbert W. Allen, District Supervisor, Bureau of Operations, Interstate Commerce Commission, 518 Federal Bldg., Des Moines, Iowa 50309.

No. MC 119880 (Sub-No. 83TA), filed July 2, 1976. Applicant: DRUM TRANSPORT INC., P.O. Box 2056, East Peoria, Ill. 61611. Applicant's representative: B. N. Drum (same address as applicant). Authority sought to operate as a *common carrier*, by motor vehicle, over irregular routes, transporting: *Alcoholic liquors*, in bulk, in tank vehicles, from Lake Alfred, Fla., in partial shipments with stop-off for additional loading at Bardstown, Ky., Frankfort, Ky., or Lawrenceburg, Inc., with total shipment to Chicago, Ill., for 180 days. Applicant has also filed an underlying ETA seeking up to 90 days of operating authority. Supporting shipper: Mar-Salle Chicago Company, 847 Larrabee St., J. Jacobi, President, Chicago, Ill. 61600. Send protests to: Patricia A. Roscoe, Transportation Assistant, Interstate Commerce Commission, Everett McKinley Dirksen Bldg., 219 S. Dearborn St., Room 1386, Chicago, Ill. 60604.

No. MC 124138 (Sub-No. 1TA), filed July 6, 1976. Applicant: ROBERT J. EDWARDS, Route 7, Box 716, Olympia, Wash. 98506. Applicant's representative: Michael D. Duppenthaler, 607 Third Ave., Seattle, Wash. 98104. Authority sought to operate as a *contract carrier*, by motor vehicle, over irregular routes, transporting: *Recreational travel trailers*, towed on their own wheels, from McMinnville, Mt. Pendleton and Salem, Oreg., to Olympia and Tacoma, Wash., under a continuing contract with Glenco Trailer Sales and Coumbs Trailer Sales Inc., for 180 days. Applicant has also filed an underlying ETA seeking up to 90 days of operating authority. Supporting shippers: Glenco Trailer Sales, 14012 Pacific Ave., Tacoma, Wash. 98444. Coumbs Trailer Sales Inc., 3111 Pacific Ave., Olympia, Wash. 98501. Send protests to: L. D. Boone, Transportation Specialist, Bureau of Operations, Interstate Commerce Commission, 858 Federal Bldg., 915 Second Ave., Seattle, Wash. 98174.

No. MC 128122 (Sub-No. 6TA), filed July 6, 1976. Applicant: STATE TRANSPORT CO., P.O. Box 1022, Corvallis, Oreg. 97330. Applicant's representative: Nick I. Goyak, One S. W. Columbia, Portland, Oreg. 97258. Authority sought to operate as a *common carrier*, by motor vehicle, over irregular routes, transporting: *Lumber and lumber mill products*, from the plantsite of Evand Products Company, Corvallis, Oreg., to points in Washington, for 180 days. Applicant has also filed an underlying ETA seeking up to 90 days of operating authority. Supporting shipper: Evans Products Co., Corvallis, Oreg. Send protests to: A. E.

Odoms, District Supervisor, Bureau of Operations, Interstate Commerce Commission, 114 Pioneer Courthouse, 555 S. W. Yamhill St., Portland, Oreg. 97204.

No. MC 128639 (Sub-No. 9TA), filed July 2, 1976. Applicant: CURRIER TRUCKING CORPORATION, 103 Lancaster Road, Gorham, N.H. 03581. Applicant's representative: Frank J. Weiner, 15 Court Square, Boston, Mass. 02108. Authority sought to operate as a *common carrier*, by motor vehicle, over irregular routes, transporting: *Woodpulp*, from Berlin, N.H., to points in Massachusetts and New York and the International Boundary Line between the United States and Canada, at or near Pittsburg, N.H., for 180 days. Supporting shipper: Brown Company, Kalamazoo, Mich. 19007. Send protests to: Ross J. Seymour, District Supervisor, Bureau of Operations, Interstate Commerce Commission, 208 Federal Bldg., 55 Pleasant St., Concord, N.H. 03301.

No. MC 135874 (Sub-No. 55TA), filed July 6, 1976. Applicant: LTL PERISHABLES, INC., 550 E. 5th St., South, South St. Paul, Minn. 55075. Applicant's representative: Paul Nelson (same address as applicant). Authority sought to operate as a *common carrier*, by motor vehicle, over irregular routes, transporting: *Foodstuffs* (except in bulk), from Duluth, Minn., and Superior, Wis., to points in Illinois, Indiana, Michigan and Ohio, for 180 days. Supporting shipper: Jeno's. Inc., P.O. Box 6509, Duluth, Minn. 55801. Send protests to: A. N. Spath, District Supervisor, Interstate Commerce Commission, Bureau of Operations, Room 414 Federal Bldg., & U.S. Courthouse, 110 S. Fourth St., Minneapolis, Minn. 55401.

No. MC 136343 (Sub-No. 84TA) filed July 2, 1976. Applicant: MILTON TRANSPORTATION, INC., P.O. Box 355, Milton, Pa. 17847. Applicant's representative: George A. Olsen, 69 Tonnele Ave., Jersey City, N.J. 07306. Authority sought to operate as a *common carrier*, by motor vehicle, over irregular routes, transporting: *Paper, paper products*, woodpulp and equipment, materials and supplies used in the operation of paper mills (except commodities in bulk and commodities, the transportation of which, because of size or weight require the use of special equipment), between the facilities of Penntech Papers, Inc., at Johnsonburg, Pa., and the facilities of Penntech Papers, Inc. and/or Kennebec River Pulp and Paper Co., at Madison, Maine. Applicant intends to tack its existing authority with MC-136343 at Shippers Plant at Johnsonburg, Pa., for 180 days. Applicant has also filed an underlying ETA seeking up to 90 days of operating authority. Supporting shipper: Penntech Papers, Inc., 100 Center St., Johnsonburg, Pa. 15845. Send protests to: Robert P. Amerine, District Supervisor, Interstate Commerce Commission, Bureau of Operations, 278 Federal Bldg., P.O. 869, Harrisburg, Pa. 17108.

No. MC 136343 (Sub-No. 85TA), filed July 6, 1976. Applicant: MILTON TRANSPORTATION, INC., P.O. Box 355, Milton, Pa. 17847. Applicant's representative: George A. Olsen, 69 Tonnele Ave., Jersey City, N.J. 07306. Authority sought to operate as a *common carrier*, by motor vehicle, over irregular routes, transporting: *Boxes, pulpboard*, other than corrugated, from Cleveland, Tenn., to Albany, Augusta, and Macon, Ga., Louisville, Ky.; Baltimore, Md.; Quincy, Mass.; Winston-Salem, N.C., and St. Bernard, Ohio, for 180 days. Applicant has also filed an underlying ETA seeking up to 90 days of operating authority. Supporting shipper: Westvaco Corporation, 299 Park Ave., New York, N.Y. 10017. Send protests to: Robert P. Amerine, District Supervisor, Bureau of Operations, Interstate Commerce Commission, 278 Federal Bldg., P.O. Box 869, Harrisburg, Pa. 17108.

No. MC 141205 (Sub-No. 2TA), filed June 29, 1976. Applicant: HUSKY OIL TRANSPORTATION COMPANY, 600 South Cherry St., Denver, Colo. 80222. Applicant's representative: Kark F. Anuta (same address as applicant). Authority sought to operate as a *contract carrier*, by motor vehicle, over irregular routes, transporting: *Crude oil*, in bulk, in tank vehicles, from oil wells, located in Rawlins County, Kans., to refineries and pipeline injection stations, located in Adams, Washington and Weld counties, Colo., under a continuing contract with Husky Oil Company, for 180 days. Applicant has also filed an underlying ETA seeking up to 90 days of operating authority. Supporting shipper: Husky Oil Company, 600 South Cherry St., Denver, Colo. 80222. Send protests to: Herbert C. Ruoff, District Supervisor, Interstate Commerce Commission, 492 U.S. Customs House, Denver, Colo. 80202.

No. MC 141266 (Sub-No. 3TA), filed July 6, 1976. Applicant: WILLIAM T. AMERSON, doing business as, BILL AMERSON TRUCKING, Route 1, Box 305, Georgetown, S.C. 29440. Applicant's representative: Mitchell King, Jr., P.O. Box 1628, Greenville, S.C. 29602. Authority sought to operate as a *contract carrier*, by motor vehicle, over irregular routes, transporting: *Textiles, textile products and supplies*, between the facilities of Oneita Knitting Mills, at or near Andrews, S.C., on the one hand, and, on the other, the facilities of Porter Mills, division of Oneita Knitting Mills, at or near Cullman, Ala., under a continuing contract with Oneita Knitting Mills, for 180 days. Applicant has also filed an underlying ETA seeking up to 90 days of operating authority. Supporting shipper: Oneita Knitting Mills, P.O. Drawer 24, Andrews, S.C. 29510. Send protests to: E. E. Strotheid, District Supervisor, Interstate Commerce Commission, Room 302, 1400 Pickens St., Columbia, S.C. 29201.

No. MC 142212TA, filed July 6, 1976. Applicant: COUTURE TRANSPORT, INC., Box 279, Saranac, N.Y. 12981. Applicant's representative: Neil D. Breslin, 99 Washington Ave., Suite 1111, Albany, N.Y. 12210. Authority sought to operate as a *contract carrier*, by motor vehicle, over irregular routes, transporting: *Aluminum poles and related parts*, between the Village of Champlain, N.Y., on the one hand, and, on the other, Chicago, Aurora, Champagne, Waukegan and Quincy, Ill.; Fort Wayne, Indianapolis, Lafayette and South Bend, Ind.; West Alice, Milwaukee and Racine, Wis.; Philadelphia, Pittsburgh and Cresona, Pa.; Newark and Trenton, N.J.; Cleveland, Cincinnati, Columbus and Toledo, Ohio; Detroit, Lansing and Grand Rapids, Mich.; Miami, Fort Lauderdale and West Palm Beach, Fla.; Houston, Dallas, Fort Worth and Corpus Christi, Tex.; Shreveport, New Orleans and Lafayette, La.; Nashville, Tenn.; Atlanta, Ga.; Hamden, Conn.; Concord and Manchester, N.H.; Boston, Mass.; and Providence, R.I., under a continuing contract with Pole-Lite Industries Ltd., for 180 days. Supporting shipper: Pole-Lite Industries Ltd., Box 266, Champlain, N.Y. 12919. Send protests to: David A. Demers, District Supervisor, Interstate Commerce Commission, Bureau of Operations, P.O. Box 548, 87 State St., Montpelier, Vt. 05602.

No. MC 142213TA, filed July 6, 1976. Applicant: COUNTY MOVING AND STORAGE CO. INC., Access Highway Rt. 89, Box 91, Caribou, Maine 04736. Applicant's representative: Linda C. Harper (same address as applicant). Authority sought to operate as a *common carrier*, by motor vehicle, over irregular routes, transporting: *Used household goods*, between Caribou, Maine, on the one hand, and points in Aroostook, Piscataquis, Penobscot and Somerset Counties, Maine, on the other, for 180 days. Supporting shipper: Office of the Judge Advocate General, Department of the Army, Washington, D.C. 20310. Send protests to: Donald G. Weiler, District Supervisor, Interstate Commerce Commission, Bureau of Operations, Room 307, 76 Pearl St., Portland, Maine 04111.

No. MC 142214TA, filed July 2, 1976. Applicant: LANE MOTOR SERVICE, INC., 45 S. Summit, Villa Park, Ill. 60181. Applicant's representative: Philip Lee, 120 W. Madison-Room 618, Chicago, Ill. 60602. Authority sought to operate as a *contract carrier*, by motor vehicle, over irregular routes, transporting: *Steel*, in coils and sheets, from Gary, Hammond, Whiting and East Chicago, Ind., to West Chicago, Ill., under a continuing contract with Vulcan Container Corp., for 180 days. Supporting shipper: Vulcan Container Corp., 100 S. Manheim Road, Hillside, Ill. Send protests to: Patricia A. Roscoe, Transportation Assistant, Interstate Commerce Commission, Everett McKinley Dirksen Bldg., 219 S. Dearborn St., Room 1386, Chicago, Ill. 60604.

PASSENGER APPLICATION

No. MC 142211 (Sub-No. 1TA), filed July 1, 1976. Applicant: EASTERN PANHANDLE TRANSIT AUTHORITY "PANTRAN," 121 West King St., Martinsburg, W. Va. 25401. Applicant's representative: Richard C. Noderer (same address as applicant). Authority sought to operate as a *common carrier*, by motor vehicle, over regular routes, transport-

ing: *Passengers and their baggage* in the same vehicle, between points in Berkeley, Jefferson and Morgan Counties, W. Va., and Hancock, Md., Halfway (Valley Mall), and Williamsport, Md., and Winchester, Va.; (1) between Martinsburg and Harpers Ferry, W. Va., via Charles Town following West Virginia State Route 9 from Martinsburg to the Junction with U.S. Route 340 at Charles Town thence over U.S. Route 340 to Harpers Ferry and return over the same route; (2) between Martinsburg, W. Va., and Hancock, Md., via Berkeley Springs, W. Va., following West Virginia State Route 9 from Martinsburg to Berkeley Springs, thence over U.S. Route 522 from Berkeley Springs to Hancock and return over the same route. Restricted to serving only those passengers whose origin and/or destination is within Berkeley, Jefferson and Morgan Counties, W. Va.; (3) between Martinsburg, W. Va., and Halfway (Valley Mall), Md., via Williamsport, Md., following U.S. Route 11 from Martinsburg to Williamsport thence via Interstate 81 to Halfway (Valley Mall) and return over the same route. Restricted to serving only those passengers whose origin and/or destination within Berkeley, Jefferson and Morgan Counties, W. Va.; (4) between Martinsburg, W. Va., and Winchester, Va., following U.S. Route 11 and return over the same route. Restricted to serving only those passengers whose origin and/or destination is within Berkeley, Jefferson and Morgan Counties, W. Va.

(5) Between Martinsburg and Charles Town, W.Va., via Shepherdstown following State Route 45 from Martinsburg to Shepherdstown thence via Jefferson County Route 17 to Charles Town and return over the same route; (6) between Martinsburg and Inwood, W. Va., via Gerrardstown following West Virginia Route 45 from Martinsburg to Junction of West Virginia Route 51 to Inwood thence via U.S. 11 to Martinsburg and return over the same route; (7) between Berkeley Springs, W. Va., and Winchester, Va., via U.S. Route 522 and return over the same route. Restricted to serving only those passengers whose origin and/or destination is within Berkeley, Jefferson and Morgan Counties, W. Va.; (8) between Berkeley Springs, and Paw Paw, W. Va., following West Virginia Route 9 and return over the same route; (9) between Charles Town, W. Va., and Winchester, Va., via Berryville, Va., following U.S. Route 240 from Charles Town to Junction with Virginia Route 7 at Berryville thence via Virginia Route 7 to Winchester and return route. Restricted to serving passengers whose origin and/or destination is within Berkeley, Jefferson and Morgan Counties, W. Va.; (10) between Charles Town, W. Va., and Frederick, Md., via Brunswick, Md., following U.S. Route 340 from Charles Town, to the junction of Maryland Route 464 thence via route 464 to the junction with Maryland Route 79 at Brunswick thence via route 79 to the junction with U.S. route 340 thence via route 340 to Frederick, Md., and return over the same route. Restricted to serving only those passengers whose origin and/or destination is within Berkeley, Morgan and Jefferson Counties, W. Va.; (11) between Charles Town, W. Va., and Leesburg, Va., via West Virginia route 9 and Virginia route 9 to the junction with Virginia route 7 thence via route 7 to Leesburg and return over the same route. Restricted to serving only those passengers whose origin and/or destination is within Berkeley, Jefferson and Morgan Counties, W. Va., for 180 days. Supporting shippers: Berkeley County Committee on Aging, 318 W. King St., Martinsburg, W. Va. 25401. Morgan County Committee on Aging, Berkeley Springs, W. Va. 25411. Jefferson County Committee on Aging, Charles Town, W. Va. 25414. Send protests to: Interstate Commerce Commission, 12th & Constitution Ave. NW., Room 1413, W. C. Hersman, District Supervisor, Washington, D.C. 20423.

WATER CARRIER APPLICATION

W-1275 (Sub-No. 2TA), filed July 2, 1976. Applicant: HOVERTRANSPORT, INC., 137 West Ave., Bridgeport, Conn. 06604. Applicant's representative: Thomas W. Murrett, 342 North Main St., West Hartford, Conn. 06117. Authority sought to operate as a *common carrier*, by water, in the transportation of: *Passengers and their baggage and parcels* weighing 50 pounds or less in regular route scheduled operations and charter operations, between Bridgeport, Conn., and Huntington, Long Island, N.Y., via Long Island Sound, for 180 days. Applicant has also filed an underlying ETA seeking up to 90 days of operating authority. Supporting shippers: There are aproximately 50 statements of support attached to the application, which may be examined at the Interstate Commerce Commission in Washington, D.C., or copies thereof which may be examined at the field office named below. Send protests to: C. D. Verrastro, District Supervisor, Bureau of Operations, Interstate Commerce Commission, 324 U.S. Post Office Bldg., 135 High St., Hartford, Conn. 06101.

By the Commission.

ROBERT L. OSWALD,
Secretary.

[FR Doc.76-20834 Filed 7-16-76;8:45 am]

[Notice No. 294]

MOTOR CARRIER BOARD TRANSFER PROCEEDINGS

The following publications include motor carrier, water carrier, broker, and freight forwarder transfer applications filed under section 212(b), 206(a), 211, 312(b), and 410(g) of the Interstate Commerce Act.

Each application (except as otherwise specifically noted) contains a statement by applicants that there will be no significant effect on the quality of the human environment resulting from approval of the application.

Protests against approval of the application, which may include a request for oral hearing, must be filed with the Commission on or before August 18, 1976. Failure seasonably to file a protest will be construed as a waiver of opposition and participation in the proceeding. A protest must be served upon applicants' representative(s), or applicants (if no such representative is named), and the protestant must certify that such service has been made.

Unless otherwise specified, the signed original and six copies of the protest shall be filed with the Commission. All protests must specify with particularity the factual basis, and the section of the Act, or the applicable rule governing the proposed transfer which protestant believes would preclude approval of the application. If the protest contains a request for oral hearing, the request shall be supported by an explanation as to why the evidence sought to be presented cannot reasonably be submitted through the use of affidavits.

The operating rights set forth below are in synopses form, but are deemed sufficient to place interested persons on notice of the proposed transfer.

No. MC-FC-76503, filed July 2, 1976. Transferee: GENMOTOR LINES, INC., 1740 West Broadway, Idaho Falls, Idaho 83401. Transferor: Harry Snoderly, doing business as Snoderly Transportation Company, 1740 West Broadway, Idaho Falls, Idaho 83401. Applicant's representative: Gregory P. Meacham, Attorney at Law, 485 E Street, Idaho Falls, Idaho 83401. Authority sought for purchase by transferee of the operating rights of transferor, as set forth in Certificates Nos. MC 128128 and MC 128128 (Sub-No. 1), issued January 23, 1967 and October 12, 1966, respectively, as follows: passengers and their baggage, in the same vehicle with passengers, in round trip charter operations, beginning and ending at Arco and Mackay, Idaho, and extending to points in Utah, Nevada, Oregon, Washington, Montana, Wyoming, California, Arizona, and Colorado; and beginning and ending at Arco, Idaho, and extending to Contact, Nev., and points located on U.S. Highway 93 between Contact and the Idaho-Nevada State line. Transferee presently holds no authority from this Commission. Application has not been filed for temporary authority under Section 210a(b).

No. MC-FC-76505, filed May 28, 1976. Transferee: NORTHERN MOVING AND STORAGE COMPANY, INC., 3315 Joy Road, Detroit, Michigan 48206. Transferor: Claude Edmondson, Doing Business as Northern Van Transfer, 3315 Joy Road, Detroit, Michigan 48206. Applicants' representative: Claude Edmondson, Northern Moving and Storage Company, Inc., 3315 Joy Road, Detroit, Michigan 48206. Authority sought for purchase by transferee of the operating rights of transferor, as set forth in Certificate No. MC 59725, issued July 6, 1970, as follows: Household goods between points in Wayne, Oakland, and Macomb Counties, Mich., on the one hand, and, on the other, points in Illinois, Indiana, Ohio, Pennsylvania, and New York. Transferee presently holds no authority from this Commission. Application has

not been filed for temporary authority under Section 210a(b).

No. MC-FC-76550, filed May 31, 1976. Transferee: TRANS ALTA TRUCK LINES LTD., 711 4th Avenue North, Lethbridge Alberta TIJ 3Y3 Canada. Transferor: Erickson Construction Ltd., P.O. Box 24, Lethbridge Alberta TIJ 3Y3 Canada. Applicants' representative: Ray F. Koby, 314 Montana Building, Great Falls, Mont. 59401. Authority sought for purchase by transferee of the operating rights of transferor, as set forth in Permit No. MC 139535 (Sub-No. 2), issued August 4, 1975, as follows: (1) furnaces and air conditioning units, and (2) parts used in the manufacture, assembly or servicing of the commodities in (1) above, when moving in mixed loads with such commodities, from Wichita, Kans., to the port of entry on the United States Canada Boundary line at or near Sweetgrass, Mont. Transferee is presently authorized to operate as a common carrier under Certificate No. MC 141862 TA. Application has not been for temporary authority under Section 210a(b).

No. MC-FC-76569, filed May 4, 1976. Transferee: HERB WHITWORTH MOVING & STORAGE CO., doing business as REPUBLIC OF ST. LOUIS, 3344 Greenwood Blvd., Maplewood, Missouri 63143. Transferor: Mid Continent Van Service, Inc., 1601 Pennsylvania Avenue, St. Louis County, Missouri 63143. Applicants' representative: Charles R. Preslar, President, Herb Whitworth Moving & Storage Co., Doing Business As Republic of St. Louis, 3344 Greenwood Blvd., Maplewood, Missouri 63143. Authority sought for purchase of a portion of the operating rights of transferor, as set forth in Certificate No. MC 76184, issued January 2, 1975, as follows: Household goods, between St. Charles, Mo., and points within 50 miles thereof, on the one hand, and, on the other, points in Illinois. Transferee is presently authorized to operate as a common carrier under Certificate No. MC 126852. Application has not been filed for temporary authority under Section 210a(b). The date for filing protests will remain the same, June 16, 1976.

No. MC-FC-76588, filed May 13, 1976. Transferee: ALL WORLD DESPATCH, INC., 54 Grenier Drive, Westfield, Massachusetts. Transferor: Paul F. Doyle, doing business as Mount Transportation Co., P.O. Box 2751, Springfield, Mass. 01101. Applicants' representative: Patrick A. Doyle, Esq., 60 Robbins Road, Springfield, Massachusetts 01104. Authority sought for purchase by transferee of the operating rights of transferor, as set forth in Certificate of Registration No. MC 96987 Sub 1, issued December 6, 1963, as follows: General commodities anywhere within the Commonwealth of Massachusetts. Transferee presently holds no authority from this Commission.

No. MC-FC-76593, filed July 7, 1976. Transferee: GOLDEN WEST TRUCKING CO., INC., 12780 SW. Prince Albert Street, Tigard, Oregon 97223. Transferor: Contract Carrier Service, Inc., 12780 SW. Prince Albert Street, Tigard, Oregon 97223. Applicants' Representative: Lawrence V. Smart, Jr., Attorney at Law, 419 NW. 23rd Avenue, Portland, Oregon 97210. Authority sought for purchase by transferee of the operating rights of transferor, as set forth in Permits Nos. MC 69365 (Sub-No. 1), MC 69365 (Sub-No. 4), MC 69365 (Sub-No. 11), MC 69365 (Sub-No. 12), MC 69365 (Sub-No. 13), and MC 69365 (Sub-No. 15), issued November 2, 1961, February 24, 1959, October 6, 1960, December 8, 1960, September 27, 1965, and January 22, 1965, respectively, as follows: Canned, processed, dried, evaporated and dehydrated fruits, and vegetables, between Salem, Newberg, and Dallas, Oreg., on the one hand, and, on the other, Portland, Oreg.; laminated wood products and prefabricated wooden timbers, and trusses, from Longview, Wash., and Springfield, Oreg., to points in Arizona, California, Colorado, Idaho, Nevada, New Mexico, Oregon, Utah, and Washington; laminated wooden beams, timbers, and arches, from the plant site of the Rilco Laminated Products Division of the Weyerhaeuser Co., at or near Cottage Grove, Oreg., to points in Arizona, California, Colorado, Idaho, Montana, Nevada, New Mexico, Utah, Washington, Wyoming, and a portion of Nebraska; laminated wooden decking, from the plant site of Weyerhaeuser Company, at Cottage Grove, Oreg., to points in California, Idaho, Montana, Nevada, Utah, and Washington; lumber, timbers, millwork, panels, boards, and sheets, and hardware and accessories, used in the installation thereof, from the plant site of Weyerhaeuser Company, at or near Cottage Grove, Oreg., and from Eugene and Springfield, Oreg., to points in California, Idaho, Montana, Nevada, Utah, and Washington; and laminated wood products, and lumber and timbers, and related hardware items, from points in Multonomah and Lane Counties, Oreg., and Lewis County, Wash., to points in Arizona, California, Colorado, Idaho, Montana, Nevada, New Mexico, Oregon, Utah, and Washington, Transferee is presently authorized to operate as a contract carrier under Permit No. MC 128575 and subs thereafter. Application has not been filed for temporary authority under Section 210a(b).

No. MC-FC-76613, filed June 4, 1976. Transferee: HEPTINSTALL TRUCKING, INC., P.O. Box 131, Cloverdale, Va. 24077. Transferor: A. B. Heptinstall, P.O. Box 131, Cloverdale, Va. 24077. Applicants' representative: A. B. Heptinstall, Box 4308, Roanoke, Va. 24015. Authority sought for purchase by transferee of the operating rights, as set forth in Certificate No. MC 115694 (Sub-No. 1), issued August 14, 1956, as follows: Blackstrap molasses, in bulk, in tank vehicles, from Portsmouth, Va., to points in North Carolina. Transferee presently holds no authority from this Commission. Application has not been filed for temporary authority under Section 210a(b).

No. MC-FC-76633, filed July 12, 1976. Transferee: THE FREE ENTERPRISE SYSTEM, INC., 819 Cedar Bough, New Albany, Ind. 47150. Transferor: Daisy Line, Inc., 1209 Vincennes St., New Albany, Ind. 47150. Applicants' representative: John G. Treitz, Sr., Attorney-at-Law, 2650 First National Tower, Louisville, Ky. 40202. Authority sought for purchase by transferee of the operating rights of transferor as set forth in Certificates Nos. MC 106187 and MC 106187 (Sub-No. 3), issued by the Commission May 13, 1954 and November 1, 1974, respectively, as follows: Passengers and their baggage, and express, newspapers and mail in the same vehicle with passengers, over specified routes, between New Albany, Ind., and Louisville, Ky., serving all intermediate points; and between Jeffersonville, Ind., and Louisville, Ky., serving no intermediate points. Transferee presently holds no authority from this Commission. Application has been filed for temporary authority under Section 210a(b).

ROBERT L. OSWALD,
Secretary.

[FR Doc.76-20835 Filed 7-16-76;8:45 am]

federal register

MONDAY, JULY 19, 1976

PART II:

SECURITIES AND EXCHANGE COMMISSION

■

SIMPLIFICATION OF CORPORATE DISCLOSURE

Proposed Amendments of Certain Forms and Related Rules

SECURITIES AND EXCHANGE COMMISSION

[17 CFR Parts 240 and 249]

[Release No. 34-12619, No. 35-19611 and IC-9352, File No. S7-645]

SIMPLIFICATION OF CORPORATE DISCLOSURE

Proposed Amendments of Certain Forms and Related Rules

The Securities and Exchange Commission today published for comment proposed amendments to certain of its rules, schedules and reporting forms under the Securities Exchange Act of 1934 (the "Exchange Act") which would (1) provide for more timely filing of reports on Form 8-K (17 CFR 249.308); (2) decrease the number of items of information required to be included in reports on Form 8-K by transferring certain items to the Form 10-Q (17 CFR 249.308 a); (3) revise certain of the items retained in the Form 8-K, as well as three of those transferred to the Form 10-Q; (4) add a new item to Form 8-K requiring disclosure of bankruptcy or receivership proceedings; (5) add two new items to Form 10-K (17 CFR 249.310) to require disclosure of items previously required in reports on Form 8-K; and (6) revise Item 5 of Schedule 14A of Regulation 14A under the Exchange Act (17 CFR 240.14a-101) to conform to the proposed amendment to Item 1 of Form 8-K. Forms 8-K, 10-Q and 10-K are the general forms for current, quarterly and annual reports filed pursuant to section 13 or 15(d) of the Exchange Act and Schedule 14A specifies the information required to be set forth in proxy and information statements filed pursuant to Section 14 of that Act. Schedule 14A is also applicable to the solicitation of proxies under the Public Utility Holding Company Act of 1935 and the Investment Company Act of 1940.

This release contains a general discussion of the background, purpose and general effect of the proposals. A brief synopsis of each proposal is included, but attention is directed to the text of the proposals for a more complete understanding.

BACKGROUND AND PURPOSE

These proposals represent an important step forward in the Commission's continuing efforts to further simplify and rationalize the corporate disclosure system under the federal securities laws and to provide more meaningful information to investors.

The proposals to transfer certain items from the Form 8-K to the Form 10-Q[1] and to require that reports on Form 8-K be filed within ten days after the occurrence of the event reported are intended to provide more comprehensive reports on Form 10-Q and more current reporting on Form 8-K of events of major importance to investors. The Commission believes that these proposals, if adopted, will make the corporate reporting system under the Exchange Act more useful and meaningful to investors. In addition, the proposals should substantially reduce the number of reports on Form 8-K required to be filed and therefore result in significant savings of costs and time to registrants and the Commission.

The Commission today reiterated, however, the obligation of publicly held companies to make full and prompt announcements of material facts regarding the company's financial condition, notwithstanding its compliance with the reporting requirements of the Exchange Act. The Commission believes that these proposals do not in any way affect the responsibility of management for making such announcements. The failure of companies to make prompt and accurate disclosure of information, both favorable and unfavorable, to security holders and the investing public may violate the Exchange Act and, in the case of an issuer making a continuous offering of its shares, may also violate the Securities Act of 1933 if the prospectus is not appropriately updated. Therefore, corporate managements are urged once again to review their policies with respect to corporate disclosure and endeavor to set up procedures which will insure that prompt disclosure be made of all material corporate developments.[2]

SYNOPSIS OF THE PROPOSALS

I. PROPOSALS RELATING TO THE TIME FOR FILING REPORTS ON FORM 8-K

Proposed Amendments to Securities Exchange Act Rules 13a-11 (17 CFR 240.13a-11) and 15d-11 (17 CFR 240.15d-11) and to Instruction B to Form 8-K

Securities Exchange Act Rules 13a-11 and 15d-11 and Instruction B to Form 8-K presently require that reports on Form 8-K be filed within ten days after the end of the month during which any event specified in the form occurs. The amendments proposed today would require that these reports be filed within 10 days after the occurrence of an event specified in the form. Registrants could continue, however, to report more than one event in a report on Form 8-K provided that the report is filed within 10 days after the occurrence of the earliest reported event.

Proposed Amendment to Instructions to Form 8-K with respect to Filing of Financial Statements of Businesses Acquired

In light of the proposed earlier filing date for reports on Form 8-K, and in order to provide additional time for registrants to file the audited financial statements required to be included in reports of an acquisition of a significant amount of assets pursuant to Item 2 of Form 8-K, the Commission also is proposing to amend Instruction 4 of the Instructions to Form 8-K relating to Financial Statements of Businesses Acquired. The proposed amendment to Instruction 4 would permit registrants to file the required financial statements, under cover of Form 8, as an amendment to the 8-K report, within 60 days after the report is filed. However, registrants which take advantage of the automatic sixty day extension of time would be expected to file with the report on Form 8-K such of the required financial statements as are available or such other financial information of a similar character to that required as is available at the time the report is filed. This provision is intended to assure that financial information necessary to enable investors to understand the reported transaction is available at the time the report on Form 8-K is filed, but to alleviate the difficulties registrants could encounter if audited financial statements of businesses acquired were required to be filed within ten days after the acquisition.

II. PROPOSALS RELATING TO THE TRANSFER OF ITEMS FROM FORM 8-K TO FORM 10-Q

Proposed Amendments to Form 8-K For Current Reports under Section 13 or 15(d) of the Securities Exchange Act

The amendments proposed today would eliminate the following information items from Form 8-K: Item 3 (Legal Proceedings), Item 4 (Changes in Securities), Item 5 (Changes in Security for Registered Securities), Item 7 (Increase in Amount of Securities Outstanding), Item 8 (Decrease in Amount of Securities Outstanding), Item 9 (Options to Purchase Securities), and Item 11 (Submission of Matters to a Vote of Security Holders). The items remaining in Form 8-K would be renumbered.

Proposed Amendments to Form 10-Q for Quarterly Reports under Section 13 or 15(d) of the Securities Exchange Act

The Commission is proposing to require that the information called for by the items proposed to be eliminated from Form 8-K be included in quarterly reports on Form 10-Q,[3] with the exception of Item 9 (Options to Purchase Securities), since the disclosure called for by that item already is required in annual reports on Form 10-K and in proxy and information statements filed pursuant to section 14 of the Securities Exchange Act.

The proposed amendments to Form 10-Q would provide for a two part report. Part I would contain the financial information presently required by the form. Part II, which would be deemed to be a "filed" document and subject to the liability provisions of section 18 of the

[1] This proposal would implement, in part, the recommendations of the so-called Wheat Report that Form 8-K be eliminated and that the 8-K items be included in a quarterly report. See "Report and Recommendations to the Securities and Exchange Commission from the Disclosure Policy Study. Disclosure to Investors, A Reappraisal of Administrative Policies under the 1933 and 1934 Acts" (March 1969) at pp. 356-364.

[2] See Securities Act Release No. 5092 (October 15, 1970), 35 FR 16733 (October 29, 1970).

[3] A result of this proposal would be to require disclosure of legal proceedings relating to environmental matters in quarterly reports rather than in current reports on Form 8-K. Comments with respect to this result are specifically invited.

Exchange Act, would contain: (1) The information reported pursuant to the six items being transferred to Form 10-Q from Form 8-K; (2) a proposed new Item 7 permitting a registrant voluntarily to include in its quarterly report any information not otherwise called for by Form 10-Q which the registrant deems of material importance to security holders; (3) a proposed new Item 8 relating to reports on Form 8-K, if any, which have been filed by registrant during the quarter covered by the report; and (4) appropriate instructions as to required exhibits. The General Instructions to Form 10-Q would be revised to reflect the proposed reorganization of the form into the two parts and to include instructions appropriate to the non-financial information required by new Part II of the form.

Proposed new Item 7 of Part II of Form 10-Q, which would permit registrants to report matters of material importance to security holders, is identical to existing Item 13 of Form 8-K and to proposed New Item 7 of Form 8-K.

In addition, proposed new Item 8 of Part II of Form 10-Q would require, in addition to the requirements that necessary exhibits to other items of Part II be filed, that registrants state whether any reports on Form 8-K have been filed during the quarter covered by the report and list the items reported and the dates of the reports. This proposal is intended to provide users of the reporting system with a convenient reference to determine whether a registrant has filed any reports on Form 8-K.

Proposed Amendments to Securities Exchange Act Rules 13a-13 (17 CFR 240.13a-13) and 15d-13 (17 CFR 240.15d-13)

In connection with the proposed transfer of items from Form 8-K to 10-Q, the Commission is proposing to revise Securities Exchange Act Rules 13a-13 and 15d-13 to require life insurance companies, holding companies having only life insurance subsidiaries, and certain mining companies to file quarterly reports on Part II of Form 10-Q if an event covered by the items in Part II has occurred during the quarter. Such companies presently are required to file current reports on Form 8-K. Thus, the proposed amendment, in effect, would preserve the status quo. The proposed amendments would not affect the exemption from the requirements to file quarterly and current reports on Forms 10-Q and 8-K presently available to certain investment companies and foreign private issuers.

In addition, Securities Exchange Act Rules 13a-13 and 15d-13 presently provide that reports on Form 10-Q shall not be deemed to be "filed" for the purpose of section 18 of the Exchange Act or otherwise subject to the liabilities of that section.[4] The Commission is proposing to amend these rules to limit this exemption from section 18 liability to the financial information required by proposed Part I of the form. The non-financial information called for by proposed new Part II of Form 10-Q, that is, the items proposed to be transferred to the Form 10-Q from the Form 8-K, would be deemed to be "filed" for the purpose of Section 18 of the Act.

Proposed Amendments to Form 10-K for Annual Reports Pursuant to Section 13 or 15(d) of the Securities Exchange Act

Reports on Form 10-Q are not required for the fourth quarter of a registrant's fiscal year and certain of the items of information presently required to be included in reports on Form 8-K, now proposed to be transferred to Form 10-Q, are not required to be included in reports on Form 10-K. Therefore, in order to provide for prompt reporting of the information called for by these items concerning events occurring during registrant's fourth quarter, the Commission is proposing to revise Form 10-K to require disclosure of the following items of information,[5] unless previously reported in a report on Form 10-Q: Proposed new Item 7 (Changes in Securities and Changes in Security for Registered Securities) and Proposed new Item 9 (Submission of Matters to a Vote of Security Holders). In addition, the Commission is proposing to add to the Form 10-K new Item 12(b) (Reports on Form 8-K) requiring registrants to state whether any reports on Form 8-K have been filed during the last quarter of the period covered by the report and to list the items reported and the dates of the reports. Certain existing items of Form 10-K would be renumbered, and other minor technical changes made, in order to properly reflect these proposed amendments.

III. PROPOSED AMENDMENTS TO ITEMS OF FORM 8-K, FOR CURRENT REPORTS UNDER SECTION 13 OR 15(D) OF THE SECURITIES EXCHANGE ACT, AND TO SCHEDULE 14A TO REGULATION 14A UNDER THE SECURITIES EXCHANGE ACT

A. *Proposed Amendment to Item 1 of Form 8-K (Changes in Control of Registrant) and to Item 5 of Schedule 14A to Regulation 14A (Voting Securities and Principal Holders Thereof).*

The Commission is proposing to revise Item 1 of Form 8-K to require, in addition to the information presently required to be reported concerning changes in control of registrant, disclosure of (1) the identity of the person or persons from whom control was assumed and (2) a description of any arrangements, including a pledge of securities of the issuer of any of its parents, which might result in a change of control of the issuer. This proposal is intended to conform the disclosure requirements of Form 8-K with respect to changes of control to the existing requirements of Item 5 (e) and (f) of Schedule 14A to Regulation 14A under the Securities Exchange Act, applicable to proxy and information statements.

The Commission also is proposing to amend Item 1 of Form 8-K and Item 5 of Schedule 14A to require the following additional disclosure concerning changes in control: (1) the amount and source of the consideration used by the person or persons who acquired control; (2) the terms of any loans or pledges obtained by the new control group for the purpose of acquiring control and the names of the lenders or pledgees; and (3) a description of any agreements or understandings among members of both the former and new control groups and their associates with respect to election of directors or other matters.

B. *Proposed Amendment to Item 2 of Form 8-K (Acquisition or Disposition of Assets).*

In order to provide for reporting of more complete information concerning acquisitions or dispositions of significant amounts of assets, otherwise than in the ordinary course of business, the Commission is proposing to amend Item 2 of Form 8-K to require a statement of the reasons for the reported transaction and identification of the source of funds used if the transaction is an acquisition.

C. *Proposed Addition of New Item 3 to Form 8-K (Bankruptcy or Receivership).*

The Commission is proposing to add a new Item 3 to Form 8-K to require reporting of information concerning the appointment of a receiver or trustee for registrant or its parent in a proceeding under the Bankruptcy Act or in any other proceeding under State or Federal law in which a court or governmental body has assumed jurisdiction over substantially all of the assets or business of the registrant or its parent, or if such jurisdiction has been assumed by leaving the existing directors and officers in possession, but subject to the supervision and control of a court or governmental body. The Commission believes that it would be extremely useful to investors to have this information available in the Commission's public files.

D. *Proposed New Item 4 of Form 8-K (Non-compliance with Terms of or Default Upon Senior Securities) (presently Item 6).*

Existing Item 6 of Form 8-K is proposed to be renumbered as Item 4 and would be amended to require registrants to report, in addition to the information presently called for by the item, any nonpayment of principal or interest on senior securities which remains unpaid for longer than 15 days from the date on which the payment was due.

E. *Proposed New Item 5 of Form 8-K (Material Charges and Credits to Income of an Unusual or Infrequent Nature and Direct Charges and Credits to Retained*

[4] The basis stated for the determination that such information should not be deemed "filed" was that "interim earnings figures can frequently be arrived at only by the use of reasonable estimates or on the basis of certain assumptions. * * *" See Securities Exchange Act Release No. 5129 (January 27, 1955), 20 FR 771 (February 4, 1955).

[5] These items of information proposed to be included in Form 10-K are presently required by Items 4, 5 and 11 of existing Form 8-K.

Earnings (exclusive of dividends)) (Presently Item 10).

In light of the decision to require 8-K reports to be filed within 10 days of the date of occurence, the Commission proposes to separate the disclosures currently required by Item 10. Experience has shown that it is sometimes difficult to make the computations required by Item 10 and secure the auditor's letter with respect to the proposed discussion within a 10-day period. The Commission continues to believe that timely reporting on such charges and credits is important and desirable. It is therefore retaining the notification provisions of Item 10 in proposed Item 5; the details would be disclosed in Form 10-Q or Form 10-K for fourth quarter events. The Commission believes that it is likely that the Form 10-Q and Form 10-K will receive wider circulation than the Form 8-K and that the details are more meaningfully assessed against the financial data disclosed in the 10-Q or 10-K.

The Commission's experience over the past three years as well as public analyses and criticisms on the impact of Item 10 have indicated that the compliance with this instruction has been inadequate. The Commission reminds registrants of their responsibilities to make timely disclosure of the matters called for by Form 8-K. The Commission intends to monitor compliance with its revised disclosures and will take further action in appropriate circumstances.

F. *Proposals to Renumber the Remaining Items of Form 8-K.*

The remaining items of Form 8-K and the instructions as to necessary exhibits would be renumbered to reflect the above-outlined changes, the deletion of Item 9 and the transfer of present Items 3, 4, 5, 7, 8, and 11 to the Form 10-Q.

IV. PROPOSED AMENDMENTS TO ITEMS OF 8-K PROPOSED TO BE TRANSFERRED TO NEW PART II OF FORM 10-Q

A. *Proposed Item 1, Part II of Form 10-Q (Legal Proceedings) (presently Item 3 of Form 8-K).*

Proposed Item 1 (Legal Proceedings) of new Part II of Form 10-Q would require, in addition to the information concerning legal proceedings presently called for by existing Item 3 of Form 8-K, disclosure of the material terms of a settlement of a legal proceeding previously reported, including, if material, the amount of damages paid or received by registrant and other relief awarded to each party to the settlement.

B. *Proposed Item 4 (Increase In Amount of Securities Outstanding) and Proposed Item 5 (Decrease in Amount of Securities Outstanding) of Part II of Form 10-Q (presently Items 7 and 8 of Form 8-K).*

Proposed Item 4 (Increase in Amount of Securities Outstanding) and Item 5 (Decrease in Amount of Securities Outstanding) of Part II of Form 10-Q would permit registrants to treat each of the following as a class of debt securities for the purpose of responding to these items: (1) Convertible long term debt, (2) non-convertible long term debt and (3) other indebtedness. The intention of this proposal is to require disclosure of increases or decreases in the amount of debt securities outstanding only when the aggregate amount of all changes in the amount of securities outstanding in each category, including changes not previously reported, exceeds 5 percent of the total outstanding debt in the category. The required disclosure with respect to increases or decreases in outstanding classes of equity securities would continue to be the same as required by existing Items 7 and 8 of Form 8-K.

PROPOSED AMENDMENTS

The text of the proposed amendments is set forth below:

ATTENTION

The texts of the following proposed amendments use ►◄ arrows to indicate new material and [ ] brackets to indicate deletions.

1. Rule 13a-11 is proposed to be amended to read as follows:

§ 240.13a-11 Current reports on Form 8-K (17 CFR 249.308).

(a) Except as provided in paragraph (b) of this section, every registrant subject to § 240.13a-1 shall file a current report on Form 8-K within 10 days after the [close of any month during which any of the events] ►occurrence of an event◄ specified in that form [occurs], unless substantially the same information as that required by Form 8-K has been previously reported by the registrant.

* * * * *

2. Rule 13a-13 is proposed to be amended to read as follows:

§ 240.13a-13 Quarterly reports on Form 10-Q (17 CFR 249.308a).

(a) Except as provided in [paragraph] ►paragraphs◄ (b) ►and (c)◄ of this section, every issuer which has securities registered pursuant to section 12 of the Act and which is required to file annual reports pursuant to section 13 of the Act on Form 10-K (§ 249.310 of this chapter), 12-K (§ 249.312 of this chapter) or U5S (§ 249.450 of this chapter) shall file a quarterly report on Form 10-Q (§ 249.308a of this chapter) within the period specified in General Instruction A to that form, for each of the first three fiscal quarters of each fiscal year of the issuer, commencing with the first such fiscal quarter which ends after securities of the issuer become so registered.

[(b) Quarterly reports on Form 10-Q need not be filed by the following issuers:]

►(b) The provisions of this rule shall not apply to the following issuers:◄

1. Investment companies required to file quarterly reports pursuant to § 240.13a-12; ►or◄

2. Foreign private issuers required to file reports pursuant to § 240.13a-16.

►(c) Part I of the quarterly report on Form 10-Q need not be filed by the following issuers:◄

[3] ►1.◄ Life insurance companies and holding companies having only life insurance subsidiaries; or

[4] [Deleted.]

[5] ►2.◄ Mining companies not in the production stage but engaged primarily in the exploration for or the development of mineral deposits other than oil, gas or coal, if all the following conditions are met: (i) The registrant has not been in production during the current fiscal year or the two years immediately prior thereto; except that being in production for an aggregate period of no more than eight months over the three-year period shall not be a violation of this condition; and (ii) receipts from the sale of mineral products or from the operations of mineral producing properties by the registrant and its subsidiaries combined have not exceeded $500,000 in any of the most recent six years and have not aggregated more than $1,500,000 in the most recent six fiscal years.

[(c)] ►(d)◄ Public utilities, common carriers and pipeline carriers which submit financial reports to the Civil Aeronautics Board, the Federal Communications Commission, the Federal Power Commission or the Interstate Commerce Commission may, at their option, in lieu of furnishing the information called for by Form 10-Q, file as exhibits to reports on this form copies of their reports submitted to such Board or Commission for the preceding fiscal quarter or for each month of such quarter, as the case may be, together with copies of their quarterly reports, if any, for such periods sent to their stockholders.

[(d)] ►(e)◄ Notwithstanding the foregoing provisions of this section, [reports on Form 10-Q, or reports] ►the financial information required by Part I of Form 10-Q, or financial information◄ submitted in lieu thereof pursuant to paragraph [(c)] ►(d)◄ of this section, shall not be deemed to be "filed" for the purpose of section 18 of the Act or otherwise subject to the liabilities of that section of the Act but shall be subject to all other provisions of the Act.

3. Rule 15d-11 is proposed to be amended to read as follows:

§ 240.15d-11 Current reports on Form 8-K (17 CFR 249.308).

(a) Except as provided in paragraph (b) of this section, every registrant subject to § 240.15d-1 shall file a current report on Form 8-K within 10 days after the [close of any month during which any of the events] ►occurrence of an event◄ specified in that form [occurs], unless substantially the same information as that required by Form 8-K has been previously reported by the registrant.

* * * * *

4. Rule 15d-13 is proposed to be amended to read as follows:

§ 240.15d-13 Quarterly reports on Form 10-Q (17 CFR 249.308a).

(a) Except as provided in [paragraph] ►paragraphs◄ (b) ►and (c)◄ of this section, every issuer which has

Exchange Act, would contain: (1) The curities Act of 1933 and which is required to file annual reports pursuant to section 15(d) of the Securities Exchange Act of 1934 on Forms 10-K (§ 249.310 of this chapter), 12-K (§ 249.312 of this chapter) or U5S (§ 249.450 of this chapter) shall file a quarterly report on Form 10-Q (§ 249.308a of this chapter) within the period specified in General Instruction A to that form, for each of the first three fiscal quarters of each fiscal year of the issuer, commencing with the first such fiscal quarter which ends after securities of the issuer become so registered.

[(b) Quarterly reports on Form 10-Q need not be filed by the following issuers:]

►(b) The provisions of this rule shall not apply to the following issuers:◄

1. Investment companies required to file quarterly reports pursuant to § 240.15d-12; ►or◄

2. Foreign private issuers required to file reports pursuant to § 240.15d-16.

►(c) Part I of the quarterly report on Form 10-Q need not be filed by the following issuers:◄

[3] ►1.◄ Life insurance companies and holding companies having only life insurance subsidiaries; or

[4] [Deleted.]

[5] ►2.◄ Mining companies not in the production stage but engaged primarily in the exploration for or the development of mineral deposits other than oil, gas or coal, if all the following conditions are met: (i) The registrant has not been in production during the current fiscal year or the two years immediately prior thereto; except that being in production for an aggregate period of no more than eight months over the three-year period shall not be a violation of this condition; and (ii) receipts from the sale of mineral products or from the operations of mineral producing properties by the registrant and its subsidiaries combined have not exceeded $500,000 in any of the most recent six years and have not aggregated more than $1,500,000 in the most recent six fiscal years.

[(c)] ►(d)◄ Public utilities, common carriers and pipeline carriers which submit financial reports to the Civil Aeronautics Board, the Federal Communications Commission, the Federal Power Commission or the Interstate Commerce Commission may, at their option, in lieu of furnishing the information called for by Form 10-Q, file as exhibits to reports on this form copies of their reports submitted to such Board or Commission for the preceding fiscal quarter or for each month of such quarter, as the case may be, together with copies of their quarterly reports, if any, for such periods sent to their stockholders.

[(d)] ►(e)◄ Notwithstanding the foregoing provisions of this section, [reports on Forms 10-Q or reports] ►the financial information required by Part I of Form 10-Q, or financial information◄ submitted in lieu thereof pursuant to paragraph [(c)] ►(d)◄ of this section, shall not be deemed to be "filed" for the purpose of section 18 of the Act or otherwise subject to the liabilities of that section of the Act but shall be subject to all other provisions of the Act.

5. Form 8-K is proposed to be amended to read as follows:

§ 249.308 Form 8-K, for current reports.

SECURITIES AND EXCHANGE COMMISSION

Washington, D.C. 20549

Form 8-K

CURRENT REPORT

Pursuant to Section 13 or 15(d) of the Securities Exchange Act of 1934

[For the Month of _____, 19__]

_____
(Exact name of registrant as specified in its charter)

►_____◄

(State or other jurisdiction of organization)	(Commission File Number)	(IRS Employer Identification No.)

_____ _____
(Address of principal executive offers) (Zip Code)

►Registrant's telephone number, including area code __ Date of report (Date of earliest event reported) _____◄

GENERAL INSTRUCTIONS

A. (No change from existing Instruction A to Form 8-K.)

B. Events to be Reported.

A report on this form is required to be filed upon the occurrence of any one or more of the events specified in the items of this form. Reports are to be filed within 10 days after the [close of each month during which any of the specified events occurs] ►occurrence of the earliest event required to be reported.◄ However, if substantially the same information as that required by this form has been previously reported by the registrant, an additional report of the information on this form need not be made. The term "previously reported" is defined in Rule 12b-2. C.-F. (No change from existing Instructions C-F to Form 8-K.)

INFORMATION TO BE INCLUDED IN THE REPORT

Item 1. Changes in Control of Registrant. (a) ►If to the knowledge of management a change in control of the issuer has occurred, state the name of the person or persons who acquired such control, the amount and the source of the consideration used by such person or persons, the basis of the control, the date and a description of the transaction or transactions which resulted in the change of control and the percentage of voting securities of the issuer now beneficially owned directly or indirectly by the person or persons who acquired control. The identity of the person or persons from whom control was assumed should be given.

Instruction 1. State the terms of any loans or pledges obtained by the new control group for the purpose of acquiring control, and the names of the lenders or pledgees.

Instruction 2. Any agreements or understandings among members of both the former and new control groups and their associates with respect to election of directors or other matters should be described.

(b) Describe any contractual arrangements, including any pledge of securities of the issuer, or any of its parents, known to the registrant, the operation of the terms of which may at a subsequent date result in a change in control of the issuer.

Instruction. Paragraph (b) does not require a description of ordinary default provisions contained in the charter, trust indentures or other governing instruments relating to securities of the issuer.◄

Item 2. Acquisition or Disposition of Assets. If the registrant or any of its majority-owned subsidiaries has acquired or disposed of a significant amount of assets, otherwise than in the ordinary course of business, furnish the following information:

(a) ►The reasons for and◄ the date and manner of the acquisition or disposition and a brief description of the assets involved, the nature and amount of consideration given or received therefor, the principle followed in determining the amount of such consideration, the identity of the persons from whom the assets were acquired or to whom they were sold and the nature of any material relationship between such persons and the registrant or any of its affiliates, any director or officer of the registrant, or any associate of any such director or officer. ►If the transaction being reported is an acquisition, identify the source or sources of the funds used.◄

(b) If any assets so acquired by the registrant or its subsidiaries constituted plant, equipment or other physical property, state the nature of the business in which the assets were used by the persons from whom acquired and whether the registrant intends to continue such use or intends to devote the assets to other purposes, indicating such other purposes.

Instructions. 1. No information need be given as to (i) any transaction between any person and any wholly-owned subsidiary of such person, i.e., a subsidiary substantially all of whose outstanding voting shares are owned by such person and/or its other wholly-owned subsidiaries; (ii) any transaction between two or more wholly-owned subsidiaries of any person; or (iii) the redemption or other acquisition of securities from the public, or the sale or other disposition of securities to the public, by the issuer of such securities.

2. The term "acquisition" includes every purchase, acquisition by lease, exchange, merger, consolidation, succession or other acquisition; provided that such term does not include the construction or development of property by or for the registrant or its subsidiaries or the acquisition of materials for such purpose. The term "disposition" includes every sale, disposition by lease, exchange, merger, consolidation, mortgage, or hypothecation of assets, assignment, whether for the benefit of creditors or otherwise, abandonment, destruction, or other disposition.

3. The information called for by this item is to be given as to each transaction or series of related transactions of the size indicated. The acquisition or disposition of securities shall be deemed the indirect acquisition or disposition of the assets represented by such securities if it results in the acquisition or disposition of control of such assets.

4. An acquisition or disposition shall be deemed to involve a significant amount of assets (i) if the registrant's and its other subsidiaries' equity in the net book value of such assets or the amount paid or received therefor upon such acquisition or disposition exceeded 10 percent of the total assets of the registrant and its consolidated subsidiaries, (ii) if it involved the succession to or disposition of a business which would meet the test of a significant subsidiary, or (iii) if it involved the acquisition or disposition of an interest in a business which would meet the test of a significant subsidiary and would be required to be accounted for by the equity method.

5. Where assets are acquired or disposed of through the acquisition or disposition of control of a person, the person from whom

such control was acquired or to whom it was disposed of shall be deemed the person from whom the assets were acquired or to whom they were disposed of, for the purposes of this item. Where such control was acquired from or disposed of to not more than five persons, their names shall be given; otherwise it will suffice to identify in an appropriate manner the class of such persons.

6. Attention is directed to the requirements at the end of the form with respect to the filing of financial statements for businesses acquired.

[Items 3–5] (Items 3, 4 and 5 deleted.)

►*Item 3. Bankruptcy or Receivership.* If a receiver or trustee has been appointed for a registrant or its parent, in a proceeding under the Bankruptcy Act or in any other proceeding under State or Federal law in which a court or governmental agency has assumed jurisdiction over substantially all of the assets or business of the registrant or its parent, or if such jurisdiction has been assumed by leaving the existing directors and officers in possession but subject to the supervision and orders of a court or governmental body, identify the proceeding, the court or governmental body, the date jurisdiction was assumed, the identity of the receiver and the date of his appointment.◄

Item [6] ►*4*◄. ►*Non-compliance with Terms of or*◄ *Default Upon Senior Securities.* (a) ►If payment of principal or interest on senior securities of the registrant or any of its significant subsidiaries remains unpaid for longer than 15 days from the date on which the payment is due, identify the indebtedness and state the nature of the non-compliance.◄

[(a)] ►(b)◄ If there has been any material default in the payment of principal, interest, a sinking or purchase fund installment, or any other material default not cured within 30 days, with respect to any indebtedness of the registrant or any of its significant subsidiaries exceeding 5 percent of the total assets of the registrant and its consolidated subsidiaries, identify the indebtedness and state the nature of the default. In the case of such a default in the payment of principal, interest or a sinking or purchase fund installment, state the amount of the default and the total arrearage on the date of filing this report.

Instruction. This paragraph refers only to events which have become defaults under the governing instruments, i.e., after the expiration of any period of grace and compliance with any notice requirements.

[(b)] ►(c)◄ If any material arrearage in the payment of dividends has occurred or if there has been any other material delinquency not cured within 30 days, with respect to any class of preferred stock of the registrant which is registered or which ranks prior to any class of registered securities, or with respect to any class of preferred stock of any significant subsidiary of the registrant, give the title of the class and state the nature of the arrearage or delinquency. In the case of an arrearage in the payment of dividends, state the amount and the total arrearage on the date of filing this report.

Instruction. Item [6] ►4◄ need not be answered as to any default or arrearage with respect to any class of securities all of which is held by, or for the account of, the registrant or its totally held subsidiaries.

[Items 7–9] (Items 7, 8 and 9 deleted.)

Item [10] ►*5.*◄ ►*Material Charge and Credits to Income of an Unusual or Infrequent Nature and Direct Charges and Credits to Retained Earnings (exclusive of dividends).*◄ [Extraordinary Item Charges and Credits, Other Material Charges and Credits to Income of an Unusual or Infrequent Nature, Material Provisions for Loss, and Restatements of Capital Share Account.] (Similar to existing Item 10 of Form 8–K.)

►For each material charge or credit to income of an unusual or infrequent nature and for each material direct charge or credit to retained earnings (exclusive of dividends) the following shall be disclosed:

(a) The date of the transaction or triggering event; or, if no transaction or triggering event is involved, the date of the registrant's determination to make the charge or credit;

(b) A description of the transaction or triggering event; or, if no current transaction or triggering event is involved, the reasons for making the charge or credit; and

(c) The amount of the charge or credit (an estimate may be used if the final amount has not been determined).

Instruction. The following examples are provided for illustrative purposes only to assist registrants in identifying charges or credits which should be reported. The examples are not all-inclusive, nor will every event of the types listed require a report since a report is only required when the event results in a material charge or credit to income or retained earnings which is either unusual or infrequent (or both). Generally, any charge or credit is expected to be shown as a separate line item in financial statements or disclosed in a footnote or in management's analysis of the summary of operations requires a report. Examples:

Extraordinary items (except tax credits resulting from the utilization of net operating loss carryforwards).

Cumulative effect of accounting change.

Write-down or write-off of assets.

Gains or losses relating to major foreign currency fluctuations.

Gains or losses on disposal of a segment of a business.

Effects of a strike, including those against competitors and major suppliers.

Effect of changes in estimates underlying previous accounting decisions, such as revised sales or cost estimates on long-term projects.

Prior-period adjustments.

Gains and losses on marketable securities.◄

[Item 11] (Item 11 deleted.)

Item [12] ►*6.*◄ *Changes in Registrant's Certifying Accountant.* (No change from existing Item 12 of Form 8–K.)

Item [13] ►*7.*◄ *Other Materially Important Events.* The registrant may, at its option, report under this item any events, with respect to which information is not otherwise called for by this form, which the registrant deems of material importance to security holders. ►Any matter described in response to this item should be described in essentially the same degree of detail as required by Items 1 through 6.◄

Item [14] ►*8.*◄ *Financial Statements and Exhibits.* (No change from existing Item 14 of Form 8–K.)

SIGNATURES

Pursuant to the requirements of the Securities Exchange Act of 1934, the registrant has duly caused this report to be signed on its behalf by the undersigned hereunto duly authorized.

(Registrant)

Date: ----------

(Signature)*

*Print name and title of the signing officer under his signature.

FINANCIAL STATEMENTS OF BUSINESSES ACQUIRED

1–3. (No change from existing instructions 1 through 3 to this topic.)

4. Filing of Other Financial [Statements] ►Information◄ in Certain Cases.

►If the required financial statements for an acquired business are not available at the time the report on Form 8–K is filed, registrant should file as an exhibit to the Form 8–K such of the required financial statements as are available or any other financial information of a similar type to that required. The required financial statements should be filed under cover of Form 8 as soon as available but not later than 60 days after the report on Form 8–K is filed.◄

The Commission may, upon the informal written request of the registrant and where consistent with the protection of investors, permit the omission of one or more of the financial statements herein required or the filing in substitution therefor of appropriate statements of comparable character. The Commission may also by informal written notice require the filing of other financial statements in addition to, or in substitution for, the statements herein required in any case where such statements are necessary or appropriate for an adequate presentation of the financial condition of any person whose financial statements are required, or whose statements are otherwise necessary for the protection of investors.

EXHIBITS

Subject to the rules as to incorporation by reference, the following documents shall be filed as exhibits to this report:

1. Copies of any plan of acquisition or disposition described in answer to Item 2, including any plan of reorganization, readjustment, exchange, merger, consolidation or succession in connection therewith.

[2.–6.] (Items 2–6 deleted.)

[8] ►2.◄ Reports from the independent accountants pursuant to Item [10] ►5◄.

[7] ►3.◄ Letters from the independent accountants furnished pursuant to Item [12(d)] ►6(d)◄.

6. Form 10–Q is proposed to be amended to read as follows:

§ 249.308a Form 10–Q, for quarterly reports under section 13 or 15(d) of the Securities Exchange Act of 1934.

Cover Page. (No change from existing cover page of Form 10–Q.)

GENERAL INSTRUCTIONS

A. Rule as to Use of Form 10–Q.

(a) and (b). (No change from existing instructions A(a) and A(b) of Form 10–Q.)

►(c) If substantially the same information as that required by Part II of this form has been previously reported by the registrant, an additional report of information on this form need not be made. The term "previously reported" is defined in Rule 12b–2.◄

B. (No change from existing Instruction B of Form 10–Q.)

C. (No change from existing Instruction C to Form 10–Q.)

[F] ►D.◄ Incorporation by Reference [to Published Statements].

(a) If the registrant makes available to its stockholders or otherwise publishes, within the period prescribed for filing the report, a financial statement containing the information required by this form, the information called for may be incorporated by reference to such published statement provided copies thereof are filed as an exhibit to the report on this form.

►(b) Other information may be incorporated by reference in answer or partial answer to any item or items of Part II of this form in accordance with the provisions of Rule 12b–23.◄

[N] ►E.◄ Signature and Filing of Report.

Eight copies of the report shall be filed with the Commission. At least one copy of

the report shall be filed with each exchange on which any class of securities of the registrant is listed and registered. At least one copy of the report filed with the Commission and one copy filed with each such exchange shall be manually signed on the registrant's behalf by a duly authorized officer of the registrant and by the principal financial officer or chief accounting officer of the registrant. Copies not manually signed shall bear typed or printed signatures.

►PART I. FINANCIAL INFORMATION◄

[D] ►Instruction 1.◄ Persons for Whom the ►Financial◄ Information is to be Given. (a) The required information is to be given as to the registrant or, if the registrant includes consolidated financial statements in its annual reports filed with the Commission, it shall be given for the registrant and its consolidated subsidiaries. If the information is given for the registrant and its consolidated subsidiaries, it need not be given separately for the registrant.

(b) The required information shall also be given separately as to each unconsolidated subsidiary or fifty percent owned person or other person, or group of such subsidiaries, fifty percent owned persons or other persons, for which separate individual or group statements are required to be included in the registrant's annual reports filed with the Commission. It need not be furnished, however, for any such unconsolidated subsidiary or person which would not be required pursuant to Rule 13a-13 or 15d-13 to file quarterly financial information if it were a registrant.

[E] ►Instruction 2.◄ Preparation of Financial Information. [The form] ►This part◄ requires only the items of information specified. The information is not required to be [certified] ►audited◄ and may carry a notation to that effect and any other qualification considered necessary or appropriate. Amounts may be stated in thousands of dollars (000 omitted) provided it is stated that such has been done. Losses or other negative amounts shall be indicated clearly in the caption and the amounts shown in parentheses.

[G] ►Instruction 3.◄ Delay in Filing ►Financial◄ Information. The information required may be omitted with respect to foreign subsidiaries not consolidated or other foreign persons if it is impracticable to furnish it within the time specified for filing the report, provided it is indicated that such information has been omitted and the omitted information is furnished by amendment when available. Apart from the foregoing, any request for extension of time for the filing of the report or the furnishing of any of the required information shall be made pursuant to Rule 12b-25.

Instructions 4 and 5. (No change from existing Instructions H and I of Form 10-Q.)

►Instruction 6. Material Charges and Credits to Income of an Unusual or Infrequent Nature and Direct Charges and Credits to Retained Earnings (exclusive of dividends). (See Item 5 of Form 8-K.) (Similar to existing Item 10 of Form 8-K.)

If there have been any material charges or credits to income of an unusual or infrequent nature (except tax credits resulting from the utilization of net operating loss carryforwards) or any material direct charges or credits to retained earnings (exclusive of dividends) the following shall be furnished for each such charge or credit:

(a) The date of the transaction or triggering event; or, if no transaction or triggering event is involved, the date of the registrant's determination to make the charge or credit;

(b) A description of the transaction or triggering event; or, if no current transaction or triggering event is involved, the reasons for making the charge or credit;

(c) An analysis of the components (in dollar amounts) of the transaction, or of the charge or credit, which includes a description of the various types of assets sold, disposed of, written down or written off; liabilities or "reserves" increased, decreased, or extinguished; and either:

(i) A statement showing the calculation of gain or loss on the transaction, showing separately any administrative or fixed costs that may be allocated, or

(ii) A description of any provision for losses on liquidation or disposal of assets or for other losses, including a schedule showing the components of each such loss and the dollar amount of any administrative and fixed costs, allocated to each such loss; and a description of any gains, or of any estimated recoveries or costs netted against each such loss;

(d) A statement showing the periods in which costs associated with each charge or credit (e.g., costs of assets sold, disposed of, written down or written off) were or are expected to be incurred. The statement should be prepared by major category (e.g., property, plant and equipment, and operating losses) and disclose the aggregate costs incurred for (i) each of the five preceding fiscal years and (ii) prior expenditures as a single amount and the expected costs to be incurred in each succeeding fiscal year.

(e) A statement of the terms of sale, showing the net amount of cash to be received in the year the transaction will be recorded and in each subsequent year involved, or, if no sale is involved, of the estimated amount of net cash outlays and inflows associated with the charge or credit in the year the charge or credit is made and in each subsequent year involved.

(f) A description of the accounting principles or practices followed in connection with the determination of each such charge or credit (e.g., extraordinary items, discontinued operations); and

(g) A report from the registrant's independent accountants stating that they have read the description pursuant to this instruction in the Form 10-Q of the facts stated therein and of the accounting principles or practices followed and stating further whether they believe that on the basis of such facts the accounting principles followed in determining each such charge or credit are in conformity with generally accepted accounting principles; or, if such is not the case, the specific respects in which they believe such principles do not so conform. Such report need not be filed if the registrant has included a letter from its independent accountants pursuant to Instruction 8 of Form 10-Q.◄

[J] ►Instruction 7.◄ Other Financial Information. The registrant may furnish any additional information related to the periods being reported on which, in the opinion of management, is of significance to investors, such as the seasonality of the company's business, major uncertainties currently facing the company, significant accounting changes under consideration and the dollar amount of backlog of firm orders. [In addition, the registrant shall indicate whether any Form 8-K was required to be filed reporting any material unusual charges or credits to income during the most recently completed fiscal quarter or whether any Form 8-K was required to be filed during that period reporting a change in independent accountants.]

Instructions 8 and 9. (No change from existing Instructions K and L of Form 10-Q.)

ATTENTION

Part II includes items transferred to Form 10-Q from Form 8-K. Arrows ►◄ indicate material not included in the existing items of Form 8-K.

►PART II. OTHER INFORMATION

Instruction. Part II of this form shall be filed only if one or more of the events specified in the items of this part have occurred during the quarter covered by the report and if such information was not previously reported. (See General Instruction A(c) of this form.) The report shall contain the item numbers and captions of all applicable items of Part II, but the text of such items may be omitted provided the responses clearly indicate the coverage of the item. Any item which is inapplicable or to which the answer is negative may be omitted and no reference thereto need be made in the report.

Item 1. Legal Proceedings. (Similar to existing Item 3 of Form 8-K.) (a) Briefly describe any material legal proceedings, other than ordinary routine litigation incidental to the business, to which the registrant or any of its subsidiaries has become a party or of which any of their property has become the subject. Include the name of the court or agency in which the proceedings are pending, the date instituted, the principal parties thereto, a description of the factual basis alleged to underlie the proceedings and the relief sought.

(b) If any such proceeding previously reported has been terminated, identify the proceeding, give the date of termination and state the disposition thereof with respect to the registrant and its subsidiaries. ►The material terms of a settlement should be set forth including, if material, the amount of damages paid or received by registrant and other relief awarded each party to the settlement.◄

Instructions. 1. If the business ordinarily results in actions for negligence or other claims, no such action or claim need be described unless it departs from the normal kind of such actions.

2. No information need be given with respect to any proceeding which involves primarily a claim for damages if the amount involved, exclusive of interest and costs, does not exceed 10 percent of the current assets of the registrant and its subsidiaries on a consolidated basis. However, if any proceeding presents in large degree the same issues as other proceedings pending or known to be contemplated, the amount involved in such other proceedings shall be included in computing such percentage.

3. Notwithstanding the foregoing instructions, any bankruptcy, receivership or similar proceeding with respect to the registrant or any of its significant subsidiaries shall be described. Any proceeding to which any director, officer or affiliate of the registrant, any principal holder of equity securities of the registrant or any associate of any such director, officer or security holder is a party adverse to the registrant or any of its subsidiaries shall also be described.

4. Notwithstanding the foregoing, administrative or judicial proceedings arising under any Federal, State or local provisions regulating the discharge of materials into the environment or otherwise relating to the protection of the environment shall not be deemed "ordinary routine litigation incidental to the business" and shall be described if such proceeding is material to the business or financial condition of the registrant or if

it involves primarily a claim for damages and the amount involved, exclusive of interest and costs, exceeds 10 percent of the current assets of the registrant and its subsidiaries on a consolidated basis. Any such proceedings by governmental authorities shall be deemed material and shall be described whether or not the amount of any claim for damages involved exceeds 10 percent of current assets on a consolidated basis and whether or not such proceedings are considered "ordinary routine litigation incidental to the business"; provided, however, that such proceedings which are similar in nature may be grouped and described generically stating: the number of such proceedings in each group; a generic description of such proceedings; the issues generally involved; and, if such proceedings in the aggregate are material to the business or financial condition of the registrant, the effect of such proceedings on the business or financial condition of the registrant.

Item 2. Changes in Securities. (Same as existing Item 4 of Form 8-K.) (a) If the constituent instruments defining the rights of the holders of any class of registered securities have been materially modified, give the title of the class of securities involved and state briefly the general effect of such modification upon the rights of holders of such securities.

(b) If the rights evidenced by any class of registered securities have been materially limited or qualified by the issuance or modification of any other class of securities, state briefly the general effect of the issuance or modification of such other class of securities upon the rights of the holders of the registered securities.

Instruction. Working capital restrictions and other limitations upon the payment of dividends are to be reported hereunder.

Item 3. Changes in Security for Registered Securities. (Same as existing Item 5 of Form 8-K.) If there has been a material withdrawal or substitution of assets securing any class of registered securities of the registrant, furnish the following information:

(a) Give the title of the securities.

(b) Identify and describe briefly the assets involved in the withdrawal or substitutions.

(c) Indicate the provision in the underlying indenture, if any, authorizing the withdrawal or substitution.

Instruction. This item need not be answered where the withdrawal or substitution is made pursuant to the terms of an indenture which has been qualified under the Trust Indenture Act of 1939.

Item 4. Increase in Amount of Securities Outstanding. (Similar to existing Item 7 of Form 8-K.) If the amount of securities of the registrant outstanding has been increased through the issuance of any new class of securities or through the issuance or reissuance of any additional securities of a class outstanding, and the aggregate amount of all such increases not previously reported exceeds 5 percent of the outstanding securities of the class, furnish the following information:

(a) Title of class, the amount outstanding as last previously reported, and the amount presently outstanding (as of a specified date).

(b) A brief description of the transaction or transactions resulting in the increase and a statement of the aggregate net cash proceeds or the nature and aggregate amount of any other consideration received or to be received by the registrant.

(c) The names of the principal underwriters, if any, indicating any such underwriters which are affiliates of the registrant.

(d) A reasonably itemized statement of the purposes, so far as determinable, for which the net proceeds have been or are to be used and the approximate amount used or to be used for each such purpose.

(e) A statement as to whether or not such securities were registered under the Securities Act of 1933; if not, an indication of the exemption claimed and the facts relied upon to make the exemption available.

(f) If the securities were capital shares, a statement of the amount of the proceeds credited or to be credited to any account other than the appropriate capital share account.

Instructions. 1. ►For the purpose of responding to this item, the registrant may treat each of the following as a single class of debt securities: (1) convertible long term debt; (2) non-convertible long term debt; and (3) other indebtedness.◄

[1] ►2.◄ This item does not apply to notes, drafts, bills of exchange or bankers' acceptances which mature not later than 1 year from the date of issuance. No report need be made where the amount not previously reported, although in excess of 5 percent of the amount outstanding, does not exceed $50,000 face amount of indebtedness or 1,000 shares or other units.

[2] ►3.◄ This item includes the reissuance of treasury securities and securities held for the account of the issuer thereof. The extension of the maturity date of indebtedness shall be deemed to be the issuance of new indebtedness for the purpose of this item. In the case of such an extension, the percentage shall be computed upon the basis of the principal amount of the indebtedness extended.

[3] ►4.◄ If an exemption from registration under the Securities Act of 1933 is claimed under section 4(2) of that Act, state whether or not the securities were taken for investment by the purchasers.

Item 5. Decrease in Amount of Securities Outstanding. (Similar to existing Item 8 of Form 8-K). If the amount of any class of securities of the registrant outstanding has been decreased through one or more transactions and the aggregate amount of all such decreases not previously reported exceeds 5 percent of the amount of securities of the class previously outstanding, furnish the following information:

(a) Title of the class, the amount outstanding as last previously reported, and the amount presently outstanding (as of a specified date).

(b) A brief description of the transaction or transactions involving the decrease and a statement of the aggregate amount of cash or the nature and aggregate amount of any other consideration paid or to be paid by the registrant in connection with such transaction or transactions.

Instruction. [Instruction] ►Instructions◄ 1 ►and 2◄ to Item [7] ►4◄ shall also apply to this item. This item need not be answered as to decreases resulting from ordinary sinking fund operations, similar periodic decreases made pursuant to the terms of the constituent instruments, decreases resulting from the conversion of securities or decreases resulting from the payment of indebtedness at maturity.

Item 6. Submission of Matters to a Vote of Security Holders. (Same as existing Item 11 of Form 8-K.) If any matter has been submitted to a vote of security holders, through the solicitation of proxies or otherwise, furnish the following information:

(a) The date of the meeting and whether it was an annual or special meeting.

(b) If the meeting involved the election of directors, state the name of each director elected at the meeting and the name of each other director whose term of office as a director continued after the meeting.

(c) Briefly describe each other matter voted upon at the meeting and state the number of affirmative votes and the number of negative votes cast with respect to each such matter.

Instructions. 1. If any matter has been submitted to a vote of security holders otherwise than at a meeting of such security holders, corresponding information with respect to such submission shall be furnished. The solicitation of any authorization or consent (other than a proxy to vote at a stockholders' meeting) with respect to any matter shall be deemed a submission of such matter to a vote of security holders within the meaning of this item.

2. Paragraph (a) need be answered only if paragraph (b) or (c) is required to be answered.

3. Paragraph (b) need not be answered if (i) proxies for the meeting were solicited pursuant to Regulation 14, (ii) there was no solicitation in opposition to the management's nominees as listed in the proxy statement, and (iii) all of such nominees were elected. If the registrant did not solicit proxies and the board of directors as previously reported to the Commission was reelected in its entirety, a statement to that effect in answer to paragraph (b) will suffice as an answer thereto.

4. Paragraph (c) need not be answered as to procedural matters or as to the selection or approval of auditors.

5. If the issuer has published a report containing all of the information called for by this item, the item may be answered by a reference to the information contained in such report, provided copies of such report are filed as an exhibit to the report on this form.

Item 7. Other Materially Important Events. The registrant may, at its option, report under this item any events, with respect to which information is not otherwise called for by this form, which the registrant deems of material importance to security holders. Any matter described in response to this item should be described in substantially the same degree of detail as required by Items 1 through 6.

Item 8. Exhibits and Reports on Form 8-K. (a) Exhibits. List all the following documents, if any, filed as a part of the report:

1. Copies of the amendments to all constituent instruments and other documents described in answer to Item 2.

2. Copies of all constituent instruments defining the rights of the holders of any new class of securities referred to in answer to Item 4.

3. Copies of the text of any proposal described in answer to Item 6.

4. Copies of any material amendments to the registrant's charter or by-laws not otherwise required to be filed.

(b) Reports on Form 8-K. State whether any reports on Form 8-K have been filed during the quarter for which this report is filed. If any current reports were filed, list under which items they were filed and the dates of the reports.◄

SIGNATURES

Pursuant to the requirements of the Securities Exchange Act of 1934, the registrant has duly caused this report to be signed on its behalf by the undersigned thereunto duly authorized.

Dated: _____

_____
(Registrant)

Dated: _____

_____
(Signature) *

_____
(Signature) *

*Print name and title of the signing officer under his signature.

7. Form 10-K is proposed to be amended to read as follows:

§ 249.310 Form 10-K, annual report pursuant to section 13 or 15(d) of the Securities Exchange Act of 1934.

Cover Page. (No change from existing cover page to Form 10-K).

GENERAL INSTRUCTIONS

(No change from existing General Instructions to Form 10-K.)

PART I

Items 1-2. (No change from existing Items 1 and 2 of Form 10-K.)

►*Item 3. Material Charges and Credits to Income of an Unusual or Infrequent Nature and Direct Charges and Credits to Retained Earnings (exclusive of dividends). (See Item 5 of Form 8-K).* (Similar to existing Item 10 of Form 8-K.)

General Instruction. If the information called for herein has been previously reported on Form 10-Q or some other form, it may be incorporated by a specific reference to the previous filing.

If there have been any material charges or credits to income of an unusual or infrequent nature (except tax credits resulting from the utilization of net operating loss carryforwards) or any material direct charges or credits to retained earnings (exclusive of dividends) the following shall be furnished for each such charge or credit:

(a) The date of the transaction or triggering event; or, if no transaction or triggering event is involved, the date of the registrant's determination to make the charge or credit;

(b) A description of the transaction or triggering event; or, if no current transaction or triggering event is involved, the reasons for making the charge or credit;

(c) An analysis of the components (in dollar amounts) of the transaction, or of the charge or credit, which includes a description of the various types of assets sold, disposed of, written down or written off; liabilities or "reserves" increased, decreased, or extinguished; and either:

(i) A statement showing the calculation of gain or loss on the transaction, showing separately any administrative or fixed costs that may be allocated, or

(ii) A description of any provision for losses on liquidation or disposal of assets or for other losses, including a schedule showing the components of each such loss and the dollar amount of any administrative and fixed costs, allocated to each such loss; and a description of any gains, or of any estimated recoveries or costs netted against each such loss;

(d) A statement showing the periods in which costs associated with each charge or credit (e.g., costs of assets sold, disposed of, written down or written off) were or are expected to be incurred. The statement should be prepared by major category (e.g., property, plant and equipment, and operating losses) and disclose the aggregate costs incurred for (i) each of the five preceding fiscal years and (ii) prior expenditures as a single amount and the expected costs to be incurred in each succeeding fiscal year.

(e) A statement of the terms of sale, showing the net amount of cash to be received in the year the transaction will be recorded and in each subsequent year involved, or, if no sale is involved, of the estimated amount of net cash outlays and in-flows associated with the charge or credit in the year the charge or credit is made and in each subsequent year involved.

(f) A description of the accounting principles or practices followed in connection with the determination of each such charge or credit (e.g., extraordinary items, discontinued operations).◄

Items 4-7. (No change from existing Items 3 through 6 of Form 10-K.)

►*Item 8. Changes in Securities and Changes in Security for Registered Securities.* (Similar to existing Items 4 and 5 of Form 8-K. Arrows ►◄ indicate material not included in the existing items of Form 8-K.)

►*General Instruction.* No response to this item is required if the information called for herein has been previously disclosed in a report on Form 10-Q.◄

(a) If the constituent instruments defining the rights of the holders of any class of registered securities have been materially modified, give the title of the class of securities involved and state briefly the general effect of such modification upon the rights of holders of such securities.

(b) If the rights evidenced by any class of registered securities have been materially limited or qualified by the issuance or modification of any other class of securities, state briefly the general effect of the issuance or modification of such other class of securities upon the rights of the holders of the registered securities.

Instruction. Working capital restrictions and other limitations upon the payment of dividends are to be reported hereunder.

(c) If there has been a material withdrawal or substitution of assets securing any class of registered securities of the registrant, furnish the following information:

1. Give the title of the securities.

2. Identify and describe briefly the assets involved in the withdrawal or substitutions.

3. Indicate the provision in the underlying indenture, if any, authorizing the withdrawal or substitution.

Instruction. This [item] ►section◄ need not be answered where the withdrawal or substitution is made pursuant to the terms of an indenture which has been qualified under the Trust Indenture Act of 1939.

Item [7] ►*9.*◄ *Approximate Number of Equity Security Holders.* (No change from existing Item 7 of Form 10-K.)

►*Item 10. Submission of Matters to a Vote of Security Holders.* (Similar to existing Item 11 of Form 10-K. Arrows ►◄ indicate material not included in the existing item of Form 8-K.)

If any matter has been submitted to a vote of security holders, through the solicitation of proxies or otherwise, furnish the following information ►if not previously disclosed in a report on Form 10-Q:◄

(a) The date of the meeting and whether it was an annual or special meeting.

(b) If the meeting involved the election of directors, state the name of each director elected at the meeting and the name of each other director whose term of office as a director continued after the meeting.

(c) Briefly describe each other matter voted upon at the meeting and state the number of affirmative votes and the number of negative votes cast with respect to each such matter.

Instructions 1. If any matter has been submitted to a vote of security holders otherwise than at a meeting of such security holders, corresponding information with respect to such submission shall be furnished. The solicitation of any authorization or consent (other than a proxy to vote at a stockholders' meeting) with respect to any matter shall be deemed a submission of such matter to a vote of security holders within the meaning of this item.

2. Paragraph (a) need be answered only if paragraph (b) or (c) is required to be answered.

3. Paragraph (b) need not be answered if (i) proxies for the meeting were solicited pursuant to Regulation 14, (ii) there was no solicitation in opposition to the management's nominees as listed in the proxy statement, and (iii) all of such nominees were elected. If the registrant did not solicit proxies and the board of directors as previously reported to the Commission was reelected in its entirely, a statement to that effect in answer to paragraph (b) will suffice as an answer thereto.

4. Paragraph (c) need not be answered as to procedural matters or as to the selection or approval of auditors.

5. If the issuer has published a report containing all of the information called for by this item, the item may be answered by a reference to the information contained in such report, provided copies of such report are filed as an exhibit to the report on this form.

Item [8] ►*11.*◄ *Executive Officers of Registrant.* (No change from existing Item 8.)

Item [9] ►*12.*◄ *Indemnification of Directors and Officers.* (No change from existing Item 9.)

Item [10] ►*13.*◄ *Financial Statements,* [*and*] *Exhibits filed* ►*, and Reports on Form 8-K.*◄

►(a)◄ List all the following documents filed as a part of the report:

[(a)] ►1.◄ All financial statements.

[(b)] ►2.◄ All exhibits, including those incorporated by reference.

Instruction. Where any financial statement or exhibit is incorporated by reference, the incorporation by reference shall be set forth in the list required by this item. See Rule 12b-23.

►(b) Reports on Form 8-K. State whether any reports on Form 8-K have been filed during the last quarter of the period covered by this report. If any current reports were filed, list under which items they were filed and the dates of the reports.◄

PART II

Items 14 through 18. (No change from existing Items 11 through 15.)

* * * * *

8. Item 5 of Schedule 14A is proposed to be amended to read as follows:

§ 240.14a-101 Schedule 14A. Information required in proxy statement.

* * * * *

Item 5. Voting Securities and Principal Holders Thereof. (a) through (d). (No change from existing Item 5 (a) through (d) of Schedule 14A.)

(e) If to the knowledge of the persons on whose behalf the solicitation is made, a change in control of the issuer has occurred since the beginning of its last fiscal year, state the name of the person or persons who acquired such control, ►the amount and the source of the consideration used by such person or persons,◄ the basis of [such] ►the◄ control, the date and a description of the transaction or transactions [in which control was acquired] ►which resulted in the change of control◄ and the percentage of voting securities of the issuer now [owned by such] ►beneficially owned directly or indirectly by the◄ person or persons ►who acquired control. The identity of the person or persons from whom control was assumed should be given.◄

►*Instruction 1.* State the terms of any loans or pledges obtained by the new control group for the purpose of acquiring control, and the names of the lenders or pledgees.

Instruction 2. Any agreements or understandings among members of both the former and new control groups and their associates with respect to election of directors or other matters should be described.◄

(f) Describe any contractual arrangements, including any pledge of securities of

the issuer, or any of its parents, known to the persons on whose behalf the solicitation is made, the operation of the terms of which may at a subsequent date result in a change in control of the issuer.

Instruction. Paragraph (f) does not require a description of ordinary default provisions contained in the charter, trust indentures or other governing instruments relating to securities of the issuer.

* * * * *

STATUTORY AUTHORITY FOR PROPOSED AMENDMENTS

The foregoing amendments are proposed pursuant to Sections 13, 14(a), 15(d) and 23(a) of the Securities Exchange Act of 1934, sections 12(e) and 20(a) of the Public Utility Holding Company Act of 1935, and sections 20(a) and 38(a) of the Investment Company Act of 1940. Pursuant to section 23(a) of the Securities Exchange Act, the Commission has considered the effect that the proposed amendments would have on competition and is not aware, at this time, of any burden that such amendments, if adopted, would impose on competition not necessary or appropriate in furtherance of the purposes of that Act. However, the Commission specifically invites comment as to the anticompetitive effects, if any, the proposals would likely engender.

All interested persons are invited to submit an original and two copies of their views and comments on the above proposals, to George A. Fitzsimmons, Secretary, Securities and Exchange Commission, Washington, D.C. 20549, on or before September 15, 1976. Such communications should refer to File No. S7-645. All such communications will be available for public inspection.

By the Commission.

SHIRLEY E. HOLLIS,
Assistant Secretary.

JULY 12, 1976.

[FR Doc.76-20535 Filed 7-16-76;8:45 am]

federal register

MONDAY, JULY 19, 1976

PART III:

FEDERAL ELECTION COMMISSION

■

ADVISORY OPINION REQUESTS

FEDERAL ELECTION COMMISSION

[Notice 1976-36, AOR 1976-43 through 1976-47]

ADVISORY OPINION REQUESTS

Pursuant to 2 U.S.C. 437f(c) and the procedures reflected in Part 112 of the Commission's notice of proposed rulemaking, published on May 26, 1976 (41 FR 21590), advisory opinion requests 1976-43 through 1976-47 have been made public at the Commission. A copy of the original request is available for public inspection and purchase at the Federal Election Commission, Public Records Division, at 1325 K Street, N.W., Washington, D.C. 20463.

Interested persons may submit written comments on any advisory opinion request within 10 days after the date the request was made public at the Commission. These comments should be directed to the Office of the General Counsel, Advisory Opinion Section, at the Commission. Persons requiring additional time in which to respond to any advisory opinion requests will normally be granted such time upon written request to the Commission. All timely comments received by the Commission will be considered before the Commission issues an advisory opinion. Comments on pending requests should refer to the specific AOR number of the requests and statutory references should be to the United States Code citations rather than to the Pub. L. citations.

A descriptive listing of each of the requests recently made public as well as the identification of the requesting party follows hereafter:

AOR 1976-43: Reporting a non-Federal committee's payment to its related Federal committee for the provision of personnel and administrative services rendered by the Federal committee: Requested by Vigo G. Nielsen, Jr., of Dobbs, Doyle & Nielsen for Gun Owners of America Committee, San Francisco, California.

AOR 1976-44: Use of a Member's mobile office in his district during campaign: Requested by Congressman Bob Carr, U.S. House of Representatives.

AOR 1976-45: Accounting by committee treasurer of contributions of less than $50; valuation of contribution given in return for item; time requirements concerning receipt and deposit of contributions; notice of advertisement's authorization: Requested by R. Brian Tsujimura, Citizens for John P. Craven, Hawaii and the Sea, Honolulu, Hawaii.

AOR 1976-46: Notice of authorization required on bumper stickers, buttons, cocktail napkins, or clothing apparel with candidate's name and "for Congress" printed thereon: Requested by Congressman John M. Ashbrook, U.S. House of Representatives.

AOR 1976-47: Contributions of less than $50 to a corporate political action committee through a payroll deduction plan: Requested by O. R. Crawford, Chairman, Concerned Citizens Political Action Committee, Houston, Texas.

Dated: July 13, 1976.

THOMAS E. HARRIS,
Vice Chairman for the Federal Election Commission.

[FR Doc.76-20572 Filed 7-16-76;8:45 am]

federal register

MONDAY, JULY 19, 1976

PART IV:

COMMODITY FUTURES TRADING COMMISSION

■

RULES RELATING TO INVESTIGATIONS

Adoption

Title 17—Commodity and Securities Exchanges

CHAPTER I—COMMODITY FUTURES TRADING COMMISSION

PART 11—RULES RELATING TO INVESTIGATIONS

Adoption

The Commodity Futures Trading Commission has adopted, as Part 11 of Title 17 of the Code of Federal Regulations, a series of rules relating to investigations. These rules, which will apply to members of the public who are involved in Commission investigations and members of the Commission staff conducting the investigations, pertain to investigations to determine whether any person has violated, is violating or is about to violate the Commodity Exchange Act, as amended, 7 U.S.C. 1, et seq., or rules, regulations or orders adopted thereunder. They do not apply to other types of investigations which the Commission may conduct—for example, a quasi-legislative investigation in anticipation of the promulgation of rule proposals.

SUMMARY OF THE RULES' PROVISIONS

An investigation will normally be initiated when information comes to the attention of the Commission or its staff which indicates that violations of the Act may have occurred or may be occurring. The purpose of the investigation will be to discover what the facts are so that the Commission may determine whether it is necessary or appropriate to institute administrative proceedings, institute action in a United States District Court, or take other preventive, remedial or punitive action. The investigation is non-adversary in nature and the procedures established in the rules reflect this.

Following § 11.1, which describes the scope and applicability of the rules, § 11.2 sets forth the authority of the Director of the Division of Enforcement and Commission employees under his supervision to conduct investigations which the Director deems appropriate. Following the investigation, he may report the results to the Commission and recommend that it take any action he believes warranted. The authority of the Director of the Division of Trading and Markets, and of the Chief Economist and Director of the Division of Economics and Education to conduct investigations consistent with these rules is also expressly noted.

Section 11.2 also sets forth several ways in which the staff may obtain evidence in the course of an investigation: (1) It may rely on voluntary statements and submissions; (2) it may utilize the inspection powers granted to the Commission with respect to boards of trade and industry professionals under sections 4g, 4i, 4n, 5(b) and 5a of the Act (7 U.S.C. 6g, 6n, 7(b) and 7a, and (3) when specifically authorized by the Commission with respect to a particular investigation, members of the Commission or its staff may issue subpoenas to compel testimony or the production of records.

To protect the interests of persons whose activities are being investigated from possible adverse implications prior to full development of the facts, and to protect the investigatory process against possible obstruction, confidentiality provisions have been established in § 11.3. All investigative proceedings and all information and records obtained during an investigation will be non-public, unless otherwise provided. Likewise, although not expressly set forth in the rule, it will be the usual policy of the Commission, subject to exceptions in the Commission's discretion, not to announce publicly or acknowledge the existence of an investigation prior to its conclusion. These limitations shall not, of course, be applicable to disclosures which are made to third parties during the course of an investigation with a view to obtaining further information concerning the matter under investigation.

Otherwise, as § 11.3 indicates, information concerning an investigation may be made public in several situations. First, the Commission may order it to be made public. Generally, this would be done only under unusual circumstances where the disclosure is found to be in the public interest. In other situations the Commission may authorize disclosure. For example, the Commission staff may write a warning letter in lieu of formal enforcement action which may contain facts disclosed in the course of the investigation. The information or documents may also be made a matter of public record during the course of any formal adjudicatory proceeding or court action authorized by the Commission or in other litigation to which the Commission may be a party. Finally, disclosure may be made under the Freedom of Information Act, 5 U.S.C. 552.

Reference is made in § 11.3 to a procedure (17 CFR 145.9) whereby a person may petition the Commission for confidential treatment of information for purposes of the Freedom of Information Act; when appropriate under law, the Commission will assert that the information is exempt from disclosure under the Freedom of Information Act in the event a request for access to the information is received under that Act. However, a request for confidentiality for purposes of the Freedom of Information Act will have no effect to prevent disclosure for law enforcement purposes or when disclosure is otherwise found appropriate in the public interest and effected as permitted by law.

The Commission encourages voluntary cooperation in its investigations where this will not result in delay or other prejudice to the public interest. However, pursuant to § 11.4(a), the Commission may itself issue subpoenas or authorize its members or members of its staff to issue subpoenas to compel the testimony of witnesses or require the production of documents, and the Commission or its staff may resort to all other compulsory processes authorized by law in any matter under investigation by the Commission. Section 11.4(b) provides that any order of the Commission that authorizes the use of subpoenas by the staff members shall cite the authority for the investigation, delineate its scope and name the persons whom the Commission has authorized to use subpoenas or other compulsory process.

Methods of serving subpoenas, as set forth in § 11.4(c), are intended to provide actual notice and therefore include both hand delivery and mailing of the subpoena to appropriate places for persons, both natural and otherwise. Witness fees and mileage are set at the same rate as those paid to witnesses in the courts of the United States. Section 11.4(d).

At the discretion of the person conducting the investigation, a record may be made of testimony taken during Commission investigations and the testimony of a witness may be taken under oath. Section 11.5 provides, however, that transcripts of testimony may be recorded only by an official reporter or other person authorized either by the Commission or by a member of its staff conducting the investigation. A witness is prohibited from engaging a reporter for his own purposes.

Criminal penalties are established under law for false statements made or false information submitted during the course of Commission investigations. Section 11.6(b) points out to persons who may be involved in Commission investigations that it is perjury for a person to make false statements under oath, in violation of 18 U.S.C. 1621. Even where no oath is taken, however, persons dealing with the Commission are subject to 18 U.S.C. 1001, which states:

> Whoever, in any matter within the jurisdiction of any department or agency of the United States knowingly and willfully falsifies, conceals or covers up by any trick, scheme, or device a material fact or makes any false, fictitious or fraudulent statements or representations, or makes or uses any false writing or document knowing the same to contain any false, fictitious or fraudulent statement or entry, shall be fined not more than $10,000 or imprisoned not more than five years, or both.

Section 11.7 sets forth various rights accorded to witnesses during Commission investigations. Where a person has been subpoenaed to appear and give testimony or to produce documents, he and his attorney have an unqualified right to inspect the Commission's order under which the subpoena was issued. He may also be furnished with a copy of the order if this would be consistent with the privacy of persons involved in the investigation and with the unimpeded conduct of the investigation. Section 11.7(a). Any person has a right to retain or obtain a copy of any data he is compelled to submit during an investigation. He is also entitled to inspect the official transcript of his testimony, and, unless there is good cause for denying him a copy, to acquire a copy of the transcript upon payment of appropriate fees. Section 11.7(b). Good cause for denial might, for example, involve a situation where the staff of the Commission believes that the witness might give access to the transcript to third parties to en-

able them to tailor their subsequent testimony to that of the witness.

Every person who appears before the Commission or its staff for the purpose of giving testimony or offering other evidence, whether voluntarily or under compulsion, may be accompanied, represented and advised by counsel. An attorney may accompany the witness to any investigatory proceeding and may advise his client before, during, and after the testimony. In addition, counsel may request, at the conclusion of the testimony, that his client be allowed to clarify any incomplete or ambiguous evidence, either orally at that point or subsequently in writing. Requests of this nature will generally be honored if they are reasonable and place no undue burden on the conduct of the investigation. For the purpose of protecting his client's interests with respect to that examination, counsel may take summary notes during the examination.

A witness may be represented by any attorney admitted to practice before the highest court of any state or territory or the District of Columbia unless (1) that attorney has been suspended or disbarred from appearance or practice before the Commission under provisions of Part 14 of this Title;[1] (2) the Commission has excluded the attorney from further participation in this proceeding because of his dilatory, obstructionist or contumacious conduct, as authorized in § 11.7(c)(2); (3) the attorney represented an earlier witness and the person conducting the investigation has invoked the sequestration provision of § 11.8(b).

Every witness offering evidence in an investigation may exercise his right under the Fifth Amendment of the Constitution to refuse to give information on the basis that it may tend to incriminate him. Section 11.7(d). At the time these rules are being promulgated, the Commission does not have authority to grant immunity to witnesses. A bill is presently pending in Congress to grant to the Commission the same authority as other agencies now have to grant immunity to witnesses, in certain circumstances, if approved by the Attorney General. On the assumption that that provision will be enacted, the Commission's rules further provide that the Commission may seek from the Attorney General of the United States his approval for the Commission to issue an order requiring the witness to testify or produce the evidence withheld. If such an order is issued in accordance with law, the witness will not thereafter be entitled to refuse to comply with the order on the basis of his right against self-incrimination, but the testimony or information compelled under the order will not be available to be used against the witness in any criminal case, except with respect to charges of perjury, false statements or non-compliance with the order.

[1] The Commission intends in the near future to promulgate rules with respect to appearance and practice of attorneys and others before the Commission. They will comprise Part 14 of Title 17 of the Code of Federal Regulations.

Because of the non-adversary nature of the Commission investigations, there is no right of confrontation or cross-examination by those who believe they may be implicated by a witness who appears during the investigation. While this is not explicitly stated in the rule, it is inherent in the confidentiality provisions of § 11.3, heretofore described.

Section 11.8(a) provides that no witness will be permitted to be present during the examination of any other witness unless specifically allowed to be present by the person conducting the investigation. In most cases such permission would be denied. Section 11.8(b) provides for the sequestration of counsel where an attorney has previously appeared in the proceeding with another witness. The sequestration provision will be invoked only where a reasonable basis exists to believe that multiple representation may obstruct or impede the investigation. The impediment may be a result either of action of counsel representing more than one witness or of action of one or more witnesses that an attorney represents (aided or abetted as a consequence of multiple representation), or may occur in any other manner. Counsel will generally be advised of the reason for his having been sequestered, but not to an extent that might jeopardize the investigation.

Part 11 is added to read as follows:

Sec.
11.1 Scope and applicability of rules.
11.2 Authority to conduct investigations.
11.3 Confidentiality of investigations.
11.4 Subpoenas.
11.5 Transcripts.
11.6 Oath; false statements.
11.7 Rights of witnesses.
11.8 Sequestration.

AUTHORITY: 7 U.S.C. 4a(j), 9, 12, 12a(5).

§ 11.1 Scope and applicability of rules.

The rules of this part apply to investigatory proceedings conducted by the Commission or its staff pursuant to sections 6(b) and 8 of the Commodity Exchange Act, as amended, 7 U.S.C. 9 and 12 (Supp. IV, 1974), to determine whether there have been violations of that Act, or the rules, regulations or orders adopted thereunder, or whether an application for designation or registration under the Act should be denied. Except as otherwise specified herein, the rules will apply to the conduct of an investigation whether or not the Commission has authorized the use of subpoenas in the particular matter to compel the production of evidence.

§ 11.2 Authority to conduct investigations.

The Director of the Division of Enforcement and members of the Commission staff acting pursuant to his authority and under his direction may conduct such investigations as he deems appropriate to determine whether any persons have violated, are violating, or are about to violate provisions of the Commodity Exchange Act, as amended, or the rules, regulations or orders adopted by the Commission pursuant to that Act or whether an applicant for registration or designation meets the requisite statutory criteria. For this purpose, the Director may obtain evidence through voluntary statements and submissions, through exercise of inspection powers over boards of trade, reporting traders, and persons required by law to register with the Commission, or, when authorized by order of the Commission, through the issuance of subpoenas. The Director shall report to the Commission the results of his investigations and recommend to the Commission such enforcement action as he deems appropriate. In particular matters the Director of the Division of Trading and Markets and the Chief Economist and Director of the Division of Economics and Education, and members of their staffs acting within the scope of their respective responsibilities, are also authorized to investigate, report and recommend to the Commission in accordance with these rules.

§ 11.3 Confidentiality of investigations.

All information and documents obtained during the course of an investigation, whether or not obtained pursuant to subpoena, and all investigative proceedings shall be treated as non-public by the Commission and its staff except to the extent that (a) the Commission directs or authorizes the public disclosure of the investigation; (b) the information or documents are made a matter of public record during the course of an adjudicatory proceeding; or (c) disclosure is required by the Freedom of Information Act, 5 U.S.C. 552, and the rules adopted by the Commission thereunder, 17 CFR Part 145. Procedures by which persons submitting information to the Commission during the course of an investigation may specifically seek confidential treatment of information for purposes of Freedom of Information Act disclosure are set forth in 17 CFR 145.9. A request for confidential treatment of information for purposes of the Freedom of Information Act shall not, however, prevent disclosure for law enforcement purposes or when disclosure is otherwise found appropriate in the public interest and permitted by law.

§ 11.4 Subpoenas.

(a) *Issuance of subpoenas.* The Commission or any member of the Commission or of its staff who, by order of the Commission, has been authorized to issue subpoenas in the course of a particular investigation may issue a subpoena directing the person named therein to appear before a designated person at a specified time and place to testify or to produce documentary evidence, or both, relating to any matter under investigation.

(b) *Authorization to issue subpoenas.* An order of the Commission authorizing one or more members of the Commission or of its staff to issue subpoenas in the course of a particular investigation shall include:

(1) A general description of the scope of the investigation;

(2) The authority under which the investigation is being conducted; and

(3) A designation of the members of the Commission or of its staff authorized by the Commission to issue subpoenas.

(c) *Service.* Service of subpoenas issued for investigative purposes shall be effected in the following manner:

(1) *Service upon a natural person.* Delivery of a copy of a subpoena to a natural person may be effected by (i) handing it to the person; (ii) leaving it at his office with the person in charge thereof or, if there is no one in charge, by leaving it in a conspicuous place therein; (iii) leaving it at his dwelling place or usual place of abode with some person of suitable age and discretion then residing therein; (iv) mailing it by registered or certified mail to him at his last known address; or (v) any other method whereby actual notice is given to him.

(2) *Service upon other persons.* When the person to be served is not a natural person, delivery of a copy of the subpoena may be effected by (i) handing it to a registered agent for service, or to any officer, director, or agent in charge of any office of such person; (ii) mailing it by registered or certified mail to any such representative at his last known address; or (iii) any other method whereby actual notice is given to any such representative.

(d) *Witness fees and mileage.* Witnesses appearing pursuant to subpoena shall be paid the same fees and mileage that are paid to witnesses in the courts of the United States.

§ 11.5 Transcripts.

Transcripts of testimony taken in the course of an investigative proceeding shall be recorded solely by an official reporter or other person or by other means authorized by the Commission or by a member of the Commission or its staff conducting the investigation for the Commission.

§ 11.6 Oath; false statements.

(a) *Oath.* At the discretion of the member of the Commission or staff member conducting the investigation, testimony of a witness may be taken under oath.

(b) *Penalties for false statements and other false information.* Any person making false statements under oath during the course of a Commission investigation is subject to the criminal penalties for perjury in 18 U.S.C. 1621. Any person who knowingly and willfully makes false or fraudulent statements, whether under oath or otherwise, or who falsifies, conceals or covers up a material fact, or submits any false writing or document, knowing it to contain false, fictitious or fraudulent information, is subject to the criminal penalties set forth in 18 U.S.C. 1001.

§ 11.7 Rights of witnesses.

(a) *Orders authorizing issuance of subpoenas.* Any person upon whom a subpoena has been served compelling him to furnish documentary evidence or testimony in an investigation shall, upon his request, be permitted to examine a copy of the Commission's order pursuant to which the subpoena has been issued. However, a copy of the order shall not be furnished for his retention except with the express approval of the Director of the Division of Enforcement; his approval shall not be given unless it has been shown to the satisfaction of the Division Director by the person seeking to retain a copy that his retention of a copy would be consistent both with the protection of privacy of persons involved in the investigation and with the unimpeded conduct of the investigation.

(b) *Copies of testimony or data.* A person compelled to submit data or evidence in the course of an investigatory proceeding shall be entitled to retain or, upon payment of appropriate fees as set forth in the Schedule of Fees for records services, 17 CFR 145b, procure a copy or transcript thereof, except that the witness may for good cause be limited to inspection of the official transcript of his testimony.

(c) *Right to Counsel.* A person compelled to appear, or who appears in person by request or permission of the Commission or its staff during an investigation, may be accompanied, represented, and advised by counsel. Subject to the provisions of § 11.8(b) of this Part, he may be represented by any attorney-at-law who is admitted to practice before the highest court in any State or territory or the District of Columbia, who has not been suspended or disbarred from appearance and practice before the Commission in accordance with the provisions of Part 14 of this Title, and who has not been excluded from further participation in the particular investigatory proceeding for good cause established in accordance with paragraph (c)(2) of this section.

(1) The right to be accompanied, represented and advised by counsel shall mean the right of a person testifying to have an attorney present with him during any aspect of an investigative proceeding and to have this attorney advise his client before, during and after the conclusion of such examination. At the conclusion of the examination, counsel may request the person presiding to permit the witness to clarify any of his answers which may need clarification in order that his answers not be left equivocal or incomplete on the record. For his use in protecting the interests of his client with respect to that examination counsel may make summary notes during the examination.

(2) With due regard for the rights of a witness, the Commission may for good cause exclude a particular attorney from further participation in any investigation in which the Commission has found the attorney to have engaged in dilatory, obstructionist or contumacious conduct. The person conducting an investigation may report to the Commission instances of apparently dilatory, obstructionist or contumacious conduct on the part of an attorney. After due notice to the attorney, the Commission may take such action as the circumstances warrant based upon a written transcript evidencing the conduct of the attorney in that investigation or such other or additional written or oral presentation as the Commission may permit or direct.

(d) *Self-Incrimination; Immunity.* (1) *Self-Incrimination.* Except as provided in paragraph (d)(2) of this section, a witness testifying or otherwise giving information in an investigation may refuse to answer questions on the basis of the right against self-incrimination granted by the Fifth Amendment of the Constitution of the United States.

(2) *Immunity.*[3] If the Commission believes that the testimony or other information sought to be obtained from any individual may be necessary to the public interest and that individual has refused or is likely to refuse to testify or provide other information on the basis of his privilege against self-incrimination, the Commission, with the approval of the Attorney General, may issue an order requiring the individual to give testimony or provide other information which he previously refused to give on the basis of self-incrimination. Whenever a witness refuses, on the basis of his privilege against self-incrimination, to testify or provide other information in an investigation under this Part, and the person presiding over the investigation communicates to the witness an order issued by the Commission requiring the witness to give testimony or provide other information, the witness may not refuse to comply with the order on the basis of his privilege against self-incrimination; but no testimony or other information compelled under the order (or any information directly or indirectly derived from such testimony or other information) may be used against the witness in any criminal case, except a prosecution for perjury, giving a false statement, or otherwise failing to comply with the order.

§ 11.8 Sequestration.

(a) *Sequestration of witnesses.* All witnesses and potential witnesses shall be sequestered and prohibited from being present during the examination of any other witness unless otherwise permitted in the discretion of the person conducting the investigation.

(b) *Sequestration of counsel.* When a reasonable basis exists to believe that an investigation may be obstructed or impeded, directly or indirectly, by an attorney's representation of more than one witness during the course of an investigation, the member of the Commission or of the Commission's staff conducting the investigation may prohibit that attorney from being present during the testimony of any witness other than the witness in whose behalf counsel first appeared in the investigatory proceeding. To the extent practicable, consistent with the integrity of the investigation,

[3] This subsection shall be effective on and after such date as section 6001 of Title 18 of the United States Code has been amended to include the Commodity Futures Trading Commission among those agencies which may, with the approval of the Attorney General, grant immunity to witnesses to the extent and in the manner prescribed in 18 U.S.C. 6001, et seq.

the attorney will be advised of the reasons for his having been sequestered.

The foregoing rules shall be effective immediately, except § 11.7(d)(2) which shall be effective upon subsequent notice published in the FEDERAL REGISTER. The Commission finds that the foregoing action relates solely to agency practice and procedure and that the public procedures and publication prior to the effective date of the rules, in accordance with the Administrative Procedure Act, as codified, 5 U.S.C. 553, are not required. However, the Commission encourages interested persons to submit written comments, suggestions, or objections. Materials submitted will be evaluated and considered with a view to amendment in appropriate cases. Comments should be directed to the Commodity Futures Trading Commission, Attn: CCU, 2033 K Street, N.W., Washington, D.C. 20581.

Issued in Washington, D.C., on July 13, 1976.

By the Commission.

WILLIAM T. BAGLEY,
Chairman, Commodity Futures Trading Commission.

[FR Doc.76-20727 Filed 7-16-76;8:45 am]

now available
15-year Cumulation

LAWS AFFECTED TABLES FOR 1956–1970

VOLUMES 70–84
UNITED STATES STATUTES AT LARGE

Lists all prior laws and other Federal instruments which were amended, repealed, or otherwise affected by the provisions of public laws enacted during the years 1956–1970. Includes index of popular name acts affected in Volumes 70–84.

Price: $8.15 domestic postpaid;
$7.50 GPO Bookstore

Compiled by Office of the Federal Register, National Archives and Records Service, General Services Administration
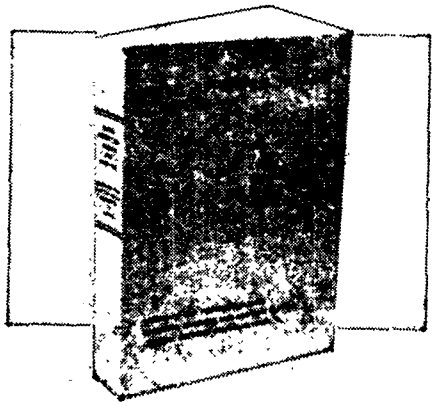
Order from Superintendent of Documents, U.S. Government Printing Office Washington, D.C. 20402