Vol. 43—No. 176
9-11-78
PAGES
40197-40448

federal register

MONDAY, SEPTEMBER 11, 1978

highlights

SUNSHINE ACT MEETINGS 40349

NATIONAL EMPLOY THE HANDICAPPED WEEK

Presidential proclamation 40197

ALCOHOL ABUSE AND PREVENTION

HEW/PHS issue regulations authorizing formula grants to assist States in planning, establishing, maintaining and evaluating projects for the development of alcohol abuse and prevention rehabilitation programs; effective 9-11-78 (Part III of this issue) 40386

REAL ESTATE LOANS AND GRANTS

USDA/FmHA amends rules concerning the maximum amount of development, grant funds for community domestic water, and waste disposal systems, comments by 10-11-78; effective 10-1-78 40199

BASIC EDUCATIONAL OPPORTUNITY GRANT PROGRAM

HEW/OE gives notice of closing date for multiple date entry contracts 40319

SCHOOL ASSISTANCE IN FEDERALLY AFFECTED AREAS

HEW/OE issues notice of extension of filing date for fiscal year 1977 applications; extended to 10-11-78 40320

INCOME TAX

Treasury/IRS adopts rules on returns of trusts and information returns of certain exempt organizations upon liquidation 40219

SMOKING IN GOVERNMENT BUILDINGS

GSA/PBS proposes regulation prohibiting smoking in certain area of buildings controlled by GSA; comments by 10-11-78. 40250

EMPLOYEE SELECTION PROCEDURES

Treasury/RSO adopts interim regulations to promote uniformity in the enforcement of Federal equal employment opportunity laws; effective 9-11-78 40223

PRODUCT LIABILITY AND ACCIDENT COMPENSATION

Commerce provides notice of synthesis of public comment on options paper 40438

CONTINUED INSIDE

AGENCY PUBLICATION ON ASSIGNED DAYS OF THE WEEK

The following agencies have agreed to publish all documents on two assigned days of the week (Monday/Thursday or Tuesday/Friday). This is a voluntary program. (See OFR notice 41 FR 32914, August 6, 1976.)

Monday	Tuesday	Wednesday	Thursday	Friday
DOT/COAST GUARD	USDA/ASCS		DOT/COAST GUARD	USDA/ASCS
DOT/NHTSA	USDA/APHIS		DOT/NHTSA	USDA/APHIS
DOT/FAA	USDA/FNS		DOT/FAA	USDA/FNS
DOT/OHMO	USDA/FSQS		DOT/OHMO	USDA/FSQS
DOT/OPSO	USDA/REA		DOT/OPSO	USDA/REA
CSA	CSC		CSA	CSC
	LABOR			LABOR
	HEW/FDA			HEW/FDA

Documents normally scheduled for publication on a day that will be a Federal holiday will be published the next work day following the holiday.

Comments on this program are still invited. Comments should be submitted to the Day-of-the-Week Program Coordinator, Office of the Federal Register, National Archives and Records Service, General Services Administration, Washington, D.C. 20408.

NOTE: As of August 14, 1978, Community Services Administration (CSA) documents are being assigned to the Monday/Thursday schedule.

federal register

Area Code 202 Phone 523-5240

Published daily, Monday through Friday (no publication on Saturdays, Sundays, or on official Federal holidays), by the Office of the Federal Register, National Archives and Records Service, General Services Administration, Washington, D.C. 20408, under the Federal Register Act (49 Stat. 500, as amended; 44 U.S.C., Ch. 15) and the regulations of the Administrative Committee of the Federal Register (1 CFR Ch. I). Distribution is made only by the Superintendent of Documents, U.S. Government Printing Office, Washington, D.C. 20402.

The FEDERAL REGISTER provides a uniform system for making available to the public regulations and legal notices issued by Federal agencies. These include Presidential proclamations and Executive orders and Federal agency documents having general applicability and legal effect, documents required to be published by Act of Congress and other Federal agency documents of public interest. Documents are on file for public inspection in the Office of the Federal Register the day before they are published, unless earlier filing is requested by the issuing agency.

The FEDERAL REGISTER will be furnished by mail to subscribers, free of postage, for $5.00 per month or $50 per year, payable in advance. The charge for individual copies is 75 cents for each issue, or 75 cents for each group of pages as actually bound. Remit check or money order, made payable to the Superintendent of Documents, U.S. Government Printing Office, Washington, D.C. 20402.

There are no restrictions on the republication of material appearing in the FEDERAL REGISTER.

INFORMATION AND ASSISTANCE

Questions and requests for specific information may be directed to the following numbers. General inquiries may be made by dialing **202-523-5240.**

FEDERAL REGISTER, Daily Issue:

Subscription orders (GPO)	202-783-3238
Subscription problems (GPO)	202-275-3050
"Dial - a - Reg" (recorded summary of highlighted documents appearing in next day's issue).	
Washington, D.C.	202-523-5022
Chicago, Ill	312-663-0884
Los Angeles, Calif	213-688-6694
Scheduling of documents for publication.	202-523-3187
Photo copies of documents appearing in the Federal Register.	523-5240
Corrections	523-5237
Public Inspection Desk	523-5215
Finding Aids	523-5227
Public Briefings: "How To Use the Federal Register."	523-3517
Code of Federal Regulations (CFR)	523-3419 523-3517
Finding Aids	523-5227

PRESIDENTIAL PAPERS:

Executive Orders and Proclamations.	523-5233
Weekly Compilation of Presidential Documents.	523-5235
Public Papers of the Presidents	523-5235
Index	523-5235

PUBLIC LAWS:

Public Law dates and numbers	523-5266 523-5282
Slip Laws	523-5266 523-5282
U.S. Statutes at Large	523-5266 523-5282
Index	523-5266 523-5282
U.S. Government Manual	523-5230
Automation	523-3408
Special Projects	523-4534

HIGHLIGHTS—Continued

HEALTH MAINTENANCE ORGANIZATIONS

HEW/PHS proposes amendments concerning requirements regarding the organization and operation; comments by 11-13-78 (Part II of this issue) 40376

HOUSING ASSISTANCE

HUD issues rule to establish program with respect to the disposition of HUD-owned projects; comments by 12-11-78 effective 9-11-78 (Part IV of this issue) 40402

AIR POLLUTION

EPA adopts rule on attainment status of States in relation to national ambient air quality standards, effective 9-11-78 (Part V of this issue) 40412

EPA proposes rule of an attainment status of States in relation to national ambient air quality standards, comments by 11-13-78 (Part V of this issue) 40436

COPYRIGHTS

Copyright royalty tribunal adopts rule with respect to proof of fixation of copyright works; effective 10-10-78 40225

PESTICIDE CHEMICALS

EPA proposes tolerances for 2,6-dichloro-4-nitroaniline, comments by 10-11-78 40249

AIR COMMERCE

Treasury/Customs withdraws a proposal pertaining to permits to proceed for foreign-registered aircraft; effective 9-11-78 40238

PROCUREMENT

GSA amends rules concerning the listing of subcontractors for bid on construction contracts, effective 10-1-78 40227

AMOXICILLIN TRIHYDRATE FROM SPAIN

Treasury/Customs issues notice of the countervailing duty petition and investigation; effective 9-11-78 40332

FLOODPLAINS AND WETLANDS

Interior/NPS makes available for public review and comment, the procedures it will use to implement Executive Orders 11988 and 11990, comments by 10-16-78 40323

VETERANS BENEFITS

VA proposes regulation on the effective date of an apportionment of a running award of compensation or pension; comments by 10-11-78 40239

PROPERTY MANAGEMENT

GSA issues regulation concerning approvals relative to the replacement of telecommunications equipment; effective 9-11-78 40228

WATER POWER PROJECTS

DOE/FERC amends rules to establish a short-form hydroelectric license; effective 9-5-78 40215

FREEDOM OF INFORMATION

EEOC adopts regulations to update schedule of fees for search and and duplication of records; effective 9-11-78 40222

MEETINGS—

Administrative Conference of the United States: Committee on Grants, Benefits and Contracts, 9-26-78 .. 40253
DOD/Army: Board of Visitors United States Military Academy, 9-28 through 9-30-78 40272
Secretary: Defense Science Board Task Force on Strategic Planning Experiment in the Maritime Boline Area, 9-29-78 40276
DOT/CG: Rules of the Road Advisory Committee, 10-25 and 10-26-78 40331
Ship Structure Committee, 10-12-78 40331
NHTSA: Safety bumper and consumer information programs, 10-18-78 40331
EPA: Resource Conservation Committee, 10-10, 11-14, and 12-12-78 40313
GSA: Regional Public Advisory Panel on Architectural and Engineering Services, 9-25 and 9-26-78 40318
HEW/OE: Advisory Committee and Accreditation and Institutional Eligibility, 10-3 and 10-4-78 40320
Secy: Board of Advisors to the Fund for the Improvement of Post Secondary Education, 10-6-78 40318
National Committee on Vital and Health Statistics, 10-5 and 10-6-78 40318
Interior/NPS: Golden Gate National Recreation Area Advisory Commission, 9-27-78 40321
National Park System Advisory Board, 10-2 through 10-13-78 40321
Pictured Rocks National Lakeshore Advisory Commission, 10-21-78 40322
National Commission for the Review of Antitrust Laws and Procedures: Working Group on the Empirical Cave Studies, 9-26-78 40324
NFAH/NEA: Dance Advisory Panel, 10-1 through 10-4-78 40325
NEH: Humanities Panel, 9-25, 9-29, 10-2, 10-3, 10-6, and 10-7-78 (8 documents) 40325, 40326
NRC: Advisory Committee on Reactor Safeguards, Subcommittee on Safeguards and Security, 9-26-78 40330
USDA/SEA: National Plant Resources Genetics Board, 10-18 and 10-19-78 40253
VA: Administrator's Education and Rehabilitation Advisory Committee, 10-12-78 40332

SEPARATE PARTS OF THIS ISSUE

Part II, HEW/PHS 40376
Part III, HEW/PHS 40386
Part IV, HUD 40402
Part V, EPA 40412
Part VI, Commerce/Secy 40348

reminders

(The items in this list were editorially compiled as an aid to FEDERAL REGISTER users. Inclusion or exclusion from this list has no legal significance. Since this list is intended as a reminder, it does not include effective dates that occur within 14 days of publication.)

Rules Going Into Effect Saturday, September 9, 1978

NRC—Requirement for construction safety integrity maintenance of multiunit sites 34764; 8-8-78

Rules Going Into Effect Sunday, September 10, 1978

FCC—FM Broadcast station in Ottumwa, Iowa; changes made in table of assignments 39584; 9-6-78

Rules Going Into Effect Today

EPA—Determination of harmful quantities for hazardous substances for vessels. 10489; 3-13-78
Determination of removability of hazardous substances for vessels ... 10488; 3-13-78
Determination of units of measurement and rates of penalty for hazardous substances for vessels 10495; 3-13-78
Water programs; designation of hazardous substances for vessels ... 10474; 3-13-78
State implementation plans: California 35694; 8-11-78
FHLBB—Servicing of loans..... 35260; 8-9-78
HEW/FDA— Additional standards for diagnostic substances for laboratory tests; revision and updating 10554; 3-14-78

List of Public Laws

NOTE: No public bills which have become law were received by the Office of the Federal Register for inclusion in today's LIST OF PUBLIC LAWS.

[Last Listing: August 31, 1978]

contents

THE PRESIDENT

Proclamations

Employ the Handicapped Week, National 40197

EXECUTIVE AGENCIES

ADMINISTRATIVE CONFERENCE OF THE UNITED STATES

Notices

Meetings:
Grants, Benefits and Contracts Committee 40253

AGENCY FOR INTERNATIONAL DEVELOPMENT

Notices

Authority delegations:
Israel, Diplomatic Officer; foreign assistance program 40331

AGRICULTURAL MARKETING SERVICE

Rules

Prunes (dried) from Calif 40199

AGRICULTURE DEPARTMENT

See Agricultural Marketing Service; Farmers Home Administration; Science and Education Administration.

ANTITRUST LAWS AND PROCEDURES, NATIONAL COMMISSION FOR THE REVIEW OF

Notices

Meetings:
Working Group on the Empirical Case Studies..... 40324

ARMY DEPARTMENT

Notices

Meetings:
Board of Visitors, U.S. Military Academy 40272
Privacy Act, systems of records 40272

ARTS AND HUMANITIES, NATIONAL FOUNDATION

Notices

Meetings:
Dance Advisory Panel 40325
Humanities Panel (8 documents)..... 40325, 40326

CIVIL AERONAUTICS BOARD

Notices

Hearings, etc.:
Air Wisconsin certification proceeding..... 40253
Florida service case..... 40254
Lineas Aereas Paraguayas..... 40254
National Airlines, Inc., et al ... 40256

COAST GUARD

Rules

Districts, marine inspection zones, and captain of port areas:
Houston COTP; editorial change 40224
Vessel traffic management:
Puget Sound; oil tankers, certain; entry prohibition..... 40224

Proposed Rules

Dangerous cargoes:
Bulk dangerous or flammable liquids; unmanned and self-propelled vessels; safety standards; benzene carriage requirements; correction 40250

Notices

Meetings:
Rules of Road Advisory Committee..... 40331
Ship Structure Committee..... 40331

COMMERCE DEPARTMENT

See Industry and Trade Administration.

Notices

Product liability and accident compensation issues; options paper; synthesis of public comments 40438

COPYRIGHT ROYALTY TRIBUNAL

Rules

Cable royalty fees; filing of claims; proof of fixation of works, policies and procedures 40225

CUSTOMS SERVICE

Proposed Rules

Air commerce:
Foreign-registered aircraft; permits to proceed; withdrawal 40238

Notices

Countervailing duty petitions and preliminary investigations:
Amoxicillin trihydrate from Spain 40332

DEFENSE DEPARTMENT

See also Army Department.

Notices

Meetings:
Science Board task forces..... 40276

ECONOMIC REGULATORY ADMINISTRATION

Rules

Oil; administrative procedures and sanctions:
Interpretations 40200

Proposed Rules

Petroleum allocation and price regulations, mandatory:
Emergency standby mandatory crude oil and refinery yield control programs; hearings and extension of time; correction..... 40233

Notices

Natural gas importation; petitions:
Columbia LNG Corp. et al. intervention order..... 40276

EDUCATION OFFICE

Notices

Applications and proposals, closing dates:
Basic educational opportunity grant program 40319
School assistance for federally-affected areas 40320
Meetings:
Accreditation and Institutional Eligibility Advisory Committee..... 40320

ENERGY DEPARTMENT

See Economic Regulatory Administration; Federal Energy Regulatory Commission.

ENVIRONMENTAL PROTECTION AGENCY

Rules

Air quality control regions; criteria and control techniques:
Attainment status designations 40226
Air quality implementation plans; enforcement by State and Federal governments after statutory deadlines:
Ohio 40226

Proposed Rules

Air quality control regions; criteria and control techniques:
Attainment status designations 40412
Air quality implementation plans; approval and promulgation various States, etc.:
Montana 40240
New Mexico..... 40245
Air quality implementation plans; enforcement by State and Federal governments after statutory deadlines:
Connecticut..... 40247
Indiana 40248

Pesticide chemicals in or on raw agricultural commodities; tolerances and exemptions, etc.:
2,6-Dichloro-4-nitroaniline 40249

Notices

Food additive petitions:
Aluminum phosphide; correction 40309
Grants, State and local assistance:
Air quality technical demonstration program; correction 40309
Meetings:
Resource Conservation Committee 40313
Pesticide registration applications (2 documents) 40309, 40311

EQUAL EMPLOYMENT OPPORTUNITY COMMISSION

Rules

Freedom of information; fee schedule 40222

FARMERS HOME ADMINISTRATION

Rules

Association, community facility loans:
Water and waste disposal systems, community domestic; development grants; rule and inquiry 40199

FEDERAL AVIATION ADMINISTRATION

Rules

Control areas 40213
Restricted areas (2 documents) . 40214, 40215
Transition areas 40211
VOR Federal airways (2 documents) 40212

Proposed Rules

Airworthiness directives:
Gates Learjet 40233
Control zone and transition area 40237

FEDERAL COMMUNICATIONS COMMISSION

Proposed Rules

TV broadcast stations; table of assignments:
Florida; extension of time 40251
Mississippi 40250

Notices

Hearings, etc.:
Blair County Broadcasters, Inc.; correction 40313
Case, Charles S., Sr 40313
Elliott, Maxie Lynn 40315
Rulemaking proceedings filed, granted, denied, etc.; petitions by various companies 40316

FEDERAL ENERGY REGULATORY COMMISSION

Rules

Electric utilities, etc.:
Forms; hydroelectric license, short form 40215

Notices

Hearings, etc.:
Anderson, Gerald E 40278
Area rate proceedings 40300
Arizona Public Service Co 40277
Bangor Hydro-Electric Co 40289
Black, William A 40282
Boston Edison Co 40301
Central Power & Light Co 40289
Central Vermont Public Service Corp. (2 documents) 40277
Columbia Gas Transmission Corp 40302
Columbia Gulf Transmission Co. et al 40291
Connecticut Light & Power Co 40297
Counsil, William G 40282
East Tennessee Natural Gas Co 40291
El Paso Electric Co 40292
El Paso Natural Gas Co. (2 documents) 40277, 40294
Florida Power & Light Co 40283
Huntington, Samuel 40283
Michigan Power Co 40283
Midwestern Gas Transmission Co 40294
Montana Power Co 40294
Mountain Fuel Supply Co. (2 documents) 40278, 40295
Natural Gas Pipeline Co. of America (3 documents) 40285, 40296, 40307
Northern Natural Gas Co. (2 documents) 40279
Northern States Power Co 40296
Pacific Power & Light Co 40302
Pactex Pipeline Co 40297
Papago Tribal Utility Authority et al 40303
Public Service Co. of Indiana . 40285
Public Service Co. of Oklahoma 40279
Southern Indiana Gas & Electric Co 40307
Southwest Gas Corp. (2 documents) 40279, 40287
Sun Oil Co 40280
Superior Water, Light & Power Co 40303
Tennessee Gas Pipeline Co. (3 documents) 40280, 40281, 40287
Texas Eastern Transmission Corp 40307
Transcontinental Gas Pipe Line Corp. (2 documents) 40288, 40304
Tri-State Gas Transmission Co 40282
United Gas Pipe Line Co. (2 documents) 40288, 40308
Virginia Electric & Power Co . 40298
Wisconsin Electric Power Co . 40305

FEDERAL MARITIME COMMISSION

Notices

Collective bargaining agreements; exemption 40316
Freight forwarder licenses:
SeAir Forwarders, Inc 40317

FEDERAL RESERVE SYSTEM

Rules

Truth-in-lending:
Student credit transactions, interim; staff interpretation; suspension of effective date and inquiry 40210

Notices

Applications, etc.:
Arkansas Best Corp 40317
Commerce Southwest, Inc 40317
First City Bancorporation of Texas, Inc 40317
Lakeside Bank Holding Co 40317
Russell State Bancshares, Inc 40317
SBT Corp 40318
West Georgia Financial Corp . 40318

FISH AND WILDLIFE SERVICE

Rules

Hunting:
Kirwin National Wildlife Refuge, Kans. (2 documents) 40232

GENERAL SERVICES ADMINISTRATION

See also Public Buildings Service.

Rules

Property management, Federal:
Telecommunications management; equipment replacement 40228

Notices

Meetings:
Regional Public Advisory Panel on Architectural and Engineering Services 40318

GEOLOGICAL SURVEY

Notices

Geothermal resource areas, operations, etc.:
New Mexico 40321

HEALTH, EDUCATION, AND WELFARE DEPARTMENT

See also Education Office; Public Health Service.

Rules

Privacy Act; implementation 40229

Notices

Meetings:
Fund for Improvement of Postsecondary Education, Board of Advisors 40318
Vital and Health Statistics National Committee 40318

HOUSING AND URBAN DEVELOPMENT DEPARTMENT

Rules

Low-income housing:
Housing assistance program for disposition of HUD-owned projects; interim rule 40402

INDUSTRY AND TRADE ADMINISTRATION

Notices

Export privileges, actions affecting:
Cordin Co 40259
Scientific articles; duty free entry:
Baylor College of Medicine 40259
Cold Spring Harbor Laboratory, et al 40261
East Carolina University 40262
Food and Drug Administration, et al 40260
Johns Hopkins University 40262
Louisiana State University, et al 40263
Mount Sinai School of Medicine 40264
National Bureau of Standards 40264
National Eye Institute 40265
Purdue University 40265
Sandia Laboratories 40265
University of California, et al. 40266
University of California 40267
University of North Carolina . 40268
University of Rochester (3 documents) 40268, 40269
University of Tennessee; withdrawn 40270
VA Hospital, et al 40270
Wayne State University, et al 40271
Yale University 40270

INTERIOR DEPARTMENT

See also Fish and Wildlife Service; Geological Survey; Land Management Bureau; National Park Service.

INTERNAL REVENUE SERVICE

Rules

Income taxes, etc.:
Trusts and exempt organizations; information returns upon liquidation 40219

INTERSTATE COMMERCE COMMISSION

Notices

Fourth section applications for relief 40334
Hearings assignments 40333
Motor carriers:
Irregular route property carriers; gateway elimination 40334
Transfer proceedings 40346
Railroad car service rules, mandatory; exemptions (4 documents) 40333, 40334
Rerouting of traffic:
Baltimore & Ohio Railroad Co 40347
Chesapeake & Ohio Railway Co 40348
CP Rail, et al 40347
Southern Pacific Transportation Co 40347

LAND MANAGEMENT BUREAU

Notices

Airport leases:
New Mexico 40321
Withdrawal and reservation of lands, proposed, etc.:
New Mexico 40320

NATIONAL HIGHWAY TRAFFIC SAFETY ADMINISTRATION

Rules

Bumper standards:
Damageability requirements; interpretation and correction 40229

Notices

Meetings:
Vehicle safety, bumper, and consumer information programs 40331

NATIONAL PARK SERVICE

Notices

Environmental statements; availability, etc.:
North Cascades National Park Service Complex; Pacific Crest Trail, rerouting 40324
Floodplain management and wetlands protection; procedures; inquiry 40323
Management and development plans:
Golden Spike National Historic Site, Utah 40322
Meetings:
Golden Gate National Recreation Area Advisory Commission 40321
National Park System Advisory Board 40321
Pictured Rocks National Lakeshore Advisory Commission 40322

NUCLEAR REGULATORY COMMISSION

Notices

Applications, etc.:
Detroit Edison Co., et at 40327
Houston Lighting & Power Co 40327
Jersey Central Power & Light Co 40329
Metropolitan Edison Co., et al 40327
Meetings:
Reactor Safeguards Advisory Committee 40330

PUBLIC BUILDINGS SERVICE

Rules

Procurement:
Advertising; listing of subcontractors on construction contracts 40227

Proposed Rules

Property management, Federal:
Smoking; prohibition in GSA controlled buildings 40250

PUBLIC HEALTH SERVICE

Rules

Alcohol abuse and alcoholism prevention, treatment, and rehabilitation services and projects 40386

Proposed Rules

Health maintenance organizations:
Organization and operation requirements 40376

REVENUE SHARING OFFICE

Rules

Fiscal assistance to State and local Governments:
Employee selection procedures, uniform guidelines 40223

SCIENCE AND EDUCATION ADMINISTRATION

Notices

Meetings:
National Plant Resources Genetics Board 40253

SECURITIES AND EXCHANGE COMMISSION

Notices

Hearings, etc.:
Puerto Rico Telephone Co 40330

STATE DEPARTMENT

See Agency for International Development.

TRANSPORTATION DEPARTMENT

See Coast Guard; Federal Aviation Administration; National Highway Traffic Safety Administration.

TREASURY DEPARTMENT

See Customs Service; Internal Revenue Service; Revenue Sharing Office.

VETERANS ADMINISTRATION

Proposed Rules

Adjudication; pensions, compensation, dependency, etc.:
Effective dates 40239

Notices

Meetings:
Administrator's Education and Rehabilitation Advisory Committee 40332

list of cfr parts affected in this issue

The following numerical guide is a list of the parts of each title of the Code of Federal Regulations affected by documents published in today's issue. A cumulative list of parts affected, covering the current month to date, follows beginning with the second issue of the month.

A Cumulative List of CFR Sections Affected is published separately at the end of each month. The guide lists the parts and sections affected by documents published since the revision date of each title.

3 CFR

PROCLAMATIONS:

4593 40197

7 CFR

993 40199
1823 40199

10 CFR

205 40200

PROPOSED RULES:

211 40233
212 40233

12 CFR

226 40210

14 CFR

71 (4 documents) 40211–40213
73 (2 documents) 40214, 40215

PROPOSED RULES:

39 40233
71 40237

18 CFR

3 40217
4 40217
16 40217
131 40217

19 CFR

PROPOSED RULES:

6 40238

24 CFR

886 40402

26 CFR

1 40219
301 40219

29 CFR

1610 40222

31 CFR

51 40223

33 CFR

3 40224
161 40224

37 CFR

302 40225

38 CFR

PROPOSED RULES:

3 40239

40 CFR

65 40226
81 40412

PROPOSED RULES:

52 (2 documents) 40240, 40245
65 (2 documents) 40247, 40248
81 40412
1801 40249

41 CFR

5B-2 40227
101-37 40228

PROPOSED RULES:

101-20 40250

42 CFR

54a 40386

PROPOSED RULES:

110 40376

45 CFR

5b 40229

46 CFR

PROPOSED RULES:

151 40250
153 40250

47 CFR

PROPOSED RULES:

73 (2 documents) 40250, 40251

49 CFR

581 40229

50 CFR

32 (2 documents) 40232

CUMULATIVE LIST OF CFR PARTS AFFECTED DURING SEPTEMBER

The following numerical guide is a list of parts of each title of the Code of Federal Regulations affected by documents published to date during September.

1 CFR

Ch. I 39069

3 CFR

EXECUTIVE ORDERS:

12024 (See EO 12078) 39741
12078 39741

PROCLAMATIONS:

4591 39561
4592 39739
4593 40197

5 CFR

213 ..... 39069, 39070, 39951-39953

7 CFR

2 39953
245 39070
250 39070
282 ..... 39074, 39075
330 39953
908 39743
910 ..... 39080, 39319, 39954
911 39319
915 39321
927 39323
931 39323
932 39743
993 40199
1004 ..... 39744, 39745
1071 39325
1073 39326
1097 39328
1102 39328
1104 39329
1106 39331
1108 39333
1120 39334
1126 39335
1132 39337
1133 39955
1138 39338
1435 39563
1823 ..... 39746, 40199

PROPOSED RULES:

6 39110
722 39117
918 40027
948 40027
965 40028
981 39393
1079 40028
1126 40030
1427 39118
1701 40036

9 CFR

91 39080
94 39956
355 39340

PROPOSED RULES:

92 40037
317 39394
318 ..... 39119, 39394
319 39394

10 CFR

35 39747
205 ..... 39080, 40200

PROPOSED RULES:

51 39801
211 40233
212 40233
430 40192

12 CFR

202 39341
226 40210

13 CFR

107 39563

PROPOSED RULES:

130 39394

14 CFR

39 ..... 39346-39348, 39748, 39750
71 ..... 39439, 39750-39753, 40211-40213
73 ..... 40214, 40215
75 39753-39755
221 39536
302 39536
399 39522

PROPOSED RULES:

39 40233
71 ..... 39803, 40237
73 ..... 39803, 39804
223 39805
250 39806
298 39587
380 39807

16 CFR

1 39083
13 39350
1209 39564

PROPOSED RULES:

13 39120
1209 39564

17 CFR

1 39956
239 39554
249 39554
270 39553
274 39553

PROPOSED RULES:

270 39396

18 CFR

1 39982
3 40217
4 40217
16 40217
131 40217

PROPOSED RULES:

1 ..... 39122, 40037

19 CFR

PROPOSED RULES:

6 40238

20 CFR

416 39564
901 39756

PROPOSED RULES:

404 39266
620 39124
653 39124

21 CFR

510 39086
520 ..... 39084, 39085
558 ..... 39086, 39350

PROPOSED RULES:

145 39126
310 39126
314 39126
337 39544
436 40038
469 40038

24 CFR

221 39570
886 40402
1916 39572
1917 ..... 39351-39360, 39573-39582, 39761-39771, 39983-39987
1920 39771-39774

PROPOSED RULES:

201 39593
1917 39129-39141
3500 39701

25 CFR

54 39361
258 39086

26 CFR

1 40219
301 40219

PROPOSED RULES:

1 ..... 39142, 39822
31 ..... 39142, 39149
301 39142

29 CFR

1601 39775
1610 40222
1910 39087

PROPOSED RULES:

1601 39831

30 CFR

41 39988

31 CFR

51 40223
223 39088

32 CFR

42 39988
902 39039
931 39101
1804 39776

33 CFR

3 40224
117 39777
161 ..... 39994, 40224

PROPOSED RULES:

89 39946
126 39832

37 CFR

302 40225

38 CFR

2 39364
14 39365

PROPOSED RULES:

3 40239
21 39832
36 ..... 39150, 39833

39 CFR

111 ..... 39583, 39995

PROPOSED RULES:

111 39593

40 CFR

2 39997
51 40009
52 ..... 39366, 40009-40011
65 ..... 40015, 40226
81 ..... 39101, 40412
600 39367

PROPOSED RULES:

52 ..... 39151, 39152, 40009-40011, 40240, 40245
65 ..... 40015 39153, 39397, 39834, 40015, 40247, 40248
81 40412
125 39282
151 39276
162 39644
180 40249
233 39398

41 CFR

Ch. I 40015
Ch. 18 40018
Ch. 101 40019
3-56 39778
5B-2 40227
14-1 ..... 39377, 39787
14-2 ..... 39378, 39788
14-3 39788
14-4 39378
14-7 39379
14-12 39379
14-18 39379
14-30 39380
14-55 39380
101-37 40228

PROPOSED RULES:

101-20 40250

42 CFR

54a 40386
57 39380
58 39384

PROPOSED RULES:

110 40376
405 39155
449 39155

45 CFR

5b 40229
801 39387

PROPOSED RULES:

1340 39593

46 CFR

542 39102

PROPOSED RULES:

151 40250
153 40250
531 39399
536 39399

47 CFR

73 ..... 39388, 39584, 39704, 40250, 40251
74 39704

47 CFR—Continued

PROPOSED RULES:

31 39385
33 39385
42 39385
43 39385
73 ..... 39400, 39593, 39594, 40250, 40251

49 CFR

172 39789
173 39791
175 39792
176 39792
179 39792
192 39389
571 39390
581 40229
1033 ..... 39103, 39104, 39794-39796
1056 39798

PROPOSED RULES:

Ch. X 39157
172 39835
173 39835
192 39401
195 39402
571 39835
1307 39157
1309 39157
1310 39157
1320 39404
1322 39404

50 CFR

20 39186
26 39798
32 ..... 39105-39107, 39584, 39585, 39799, 39800, 40021-40024, 40232
216 40025
285 39107
611 39586
651 39108
810 39306

PROPOSED RULES:

230 40045
652 39161

FEDERAL REGISTER PAGES AND DATES—SEPTEMBER

Pages	*Date*
39069-39317	Sept. 1
39319-39560	5
39561-39738	6
39739-39950	7
39951-40195	8
40197-40448	11

[3195-01]

presidential documents

Title 3—The President

PROCLAMATION 4593

National Employ the Handicapped Week, 1978

By the President of the United States of America

A Proclamation

Our country's greatest resource is its people—including those with physical and mental disabilities.

But handicapped individuals too often have had to exist on the sidelines of life because of poor education, improper vocational preparation, unavailable transportation, inaccessible buildings and other difficulties.

Now, however, local, state and Federal laws and regulations are beginning to ensure equal rights to the disabled, so that they will no longer be second-class citizens. All offices of the Federal government have been directed to improve hiring and promotion practices as they relate to handicapped individuals. The private sector, too, is being made more aware of its duties and responsibilities.

To affirm our commitment to handicapped individuals, the Congress, by joint resolution of August 11, 1945, as amended (36 U.S.C. 155) has called for the designation of the first week in October of each year as National Employ the Handicapped Week.

NOW, THEREFORE, I, JIMMY CARTER, President of the United States of America, do hereby designate the week beginning October 1, 1978, as National Employ the Handicapped Week. I urge all Governors, Mayors, other public officials, leaders in business and labor, and private citizens at all levels of responsibility to help secure full employment rights for handicapped individuals and to remove all barriers that prevent their full participation in every aspect of our national life.

IN WITNESS WHEREOF, I have hereunto set my hand this seventh day of September, in the year of our Lord nineteen hundred seventy-eight, and of the Independence of the United States of America the two hundred and third.

Jimmy Carter

[FR. Doc. 78-25691 Filed 9-8-78; 11:12 am]

rules and regulations

This section of the FEDERAL REGISTER contains regulatory documents having general applicability and legal effect most of which are keyed to and codified in the Code of Federal Regulations, which is published under 50 titles pursuant to 44 U.S.C. 1510.
The Code of Federal Regulations is sold by the Superintendent of Documents. Prices of new books are listed in the first FEDERAL REGISTER issue of each month.

[3410-02]

Title 7—Agriculture

CHAPTER IX—AGRICULTURAL MARKETING SERVICE (MARKETING AGREEMENTS AND ORDERS; FRUITS, VEGETABLES, NUTS); DEPARTMENT OF AGRICULTURE

PART 993—DRIED PRUNES PRODUCED IN CALIFORNIA

Amendment of Administrative Rules and Regulations

AGENCY: Agricultural Marketing Service, USDA.

ACTION: Final rule.

SUMMARY: This regulation eliminates the requirement that the inspector personally sign each incoming inspection certificate issued by the inspection service as provided for under § 993.149(c)(2) of the administrative rules and regulations. This change is made on the basis of a recommendation by the Prune Administrative Committee and based on the fact that these inspection certificates are computerized printouts and having the inspector sign each certificate serves no useful purpose.

DATES: September 11, 1978.

FOR FURTHER INFORMATION CONTACT:

Charles R. Brader, 202-447-6393.

SUPPLEMENTAL INFORMATION: This rule is pursuant to the marketing agreement, as amended, and order No. 993, as amended (7 CFR Part 993) regulating the handling of dried prunes produced in California, effective under the Agricultural Marketing Agreement Act of 1937, as amended (7 U.S.C. 601-674). Notice of this action and opportunity for interested persons to file written comments thereon was published in the August 8, 1978, issue of the FEDERAL REGISTER (43 FR 35053). No comments were received.

Since most computations on incoming prune inspection certificates are made by the inspection service's computer service and then checked by the inspection service for obvious error, it is unnecessary for the inspector to sign each of the certificates attesting to their accuracy. Under the rule, these certificates will bear the printed signature of the senior executive of the DFA of California. The DFA of California is the inspection service under the marketing order.

§ 993.149 [Amended]

Therefore, § 993.149(c)(2) is amended by deleting the word "signed" in the first sentence.

It is further found that it is impractical, unnecessary, and contrary to the public interest to postpone the effective date until 30 days after publication in the FEDERAL REGISTER (5 U.S.C. 553) in that harvest has already started and growers are delivering prunes to dehydrators and handlers and no useful purpose will be served by delaying the effective date of this action.

(Secs. 1-19, 48 Stat. 31, as amended; 7 U.S.C. 601-674.)

Dated: September 6, 1978.

CHARLES R. BRADER,
Deputy Director,
Fruit and Vegetable Division.

[FR Doc. 78-25508 Filed 9-8-78; 8:45 am]

[3410-07]

CHAPTER XVIII—FARMERS HOME ADMINISTRATION, DEPARTMENT OF AGRICULTURE

SUBCHAPTER B—LOANS AND GRANTS PRIMARILY FOR REAL ESTATE PURPOSES

[FmHA Instruction 442.13]

PART 1823—ASSOCIATION LOANS AND GRANTS—COMMUNITY FACILITIES, DEVELOPMENT, CONSERVATION, UTILIZATION

Subpart P—Development Grants for Community Domestic Water and Waste Disposal Systems

ELIGIBLE PROJECT DEVELOPMENT COST; INCREASE IN PERCENTAGE

AGENCY: Farmers Home Administration, USDA.

ACTION: Final rule with comments requested.

SUMMARY: The Farmers Home Administration (FmHA) proposes to amend its grant regulation concerning the maximum amount of development grant funds for community domestic water and waste disposal systems. The intended effect of this action is to increase the percentage of eligible project development cost. This action is being taken in response to the 1978 amendments to the Consolidated Farm and Rural Development Act.

EFFECTIVE DATE: October 1, 1978, however, comments must be received on or before October 11, 1978.

ADDRESSES: Submit written comments to the Office of the Chief, Directives Management Branch, Farmers Home Administration, U.S. Department of Agriculture, Room 6316, Washington, D.C. 20250. All written comments made pursuant to this notice will be available for public inspection at the address given above.

FOR FURTHER INFORMATION CONTACT:

Bernie Wright, telephone 202-447-5717.

SUPPLEMENTARY INFORMATION: FmHA amends § 1823.472 paragraphs (a), (d) (2) and (3) of Subpart P of Part 1823, Chapter XVIII, Title 7, in the Code of Federal Regulations. This amendment is set forth to provide that FmHA development grants may not be made in excess of seventy-five percent of the eligible development cost. However, FmHA has administratively determined it would not be in the best interest of the public to use a substantial amount of grant funds to retroactively adjust the amount of grant assistance on projects where funds have been obligated. Also, such a retroactive adjustment would create an unreasonable administrative burden on the agency. In addition, this position is based on the fact that previously funded projects were given full consideration based on previous authorities. In such cases and based on existing regulations, grant funds were obligated to help achieve a reasonable user rate which is the primary objective of the grant program.

It is the policy of this Department that rules relating to public property, loans, grants, benefits or contracts shall be published for comment notwithstanding the exemption in 5 U.S.C. 553 with respect to such rules. These amendments, however, are not

published for propsed rulemaking since the purpose of the change is to comply with the 1978 amendments to the Consolidated Farm and Rural Development Act.

Accordingly, § 1823.472 paragraphs (a), (d) (2) and (3), are amended to read as follows:

§ 1823.472 Application processing.

* * * * *

(a) Grants may not exceed seventy-five percent (75%) of the eligible project development cost listed in paragraph (c) of this section.

* * * * *

(d) *Grant limitations.* * * *

(2) An FmHA development grant may not be made in excess of seventy-five percent (75%) of the eligible development cost.

(3) FmHA grants may be used on projects where other types of financial assistance are available on all parts of the project, provided the other assistance is on reasonable rates and terms. In such cases, the maximum percentages allowed under other agencies' authorities will apply to their participation in the project. However, the FmHA grant may not exceed seventy-five percent (75%) of the eligible project development cost. The need for FmHA grant funds must meet the requirements of paragraph (b) of this section after considering all project financing.

* * * * *

(7 U.S.C. 1989; delegation of authority by the Secretary of Agriculture, 7 CFR 2.23; delegation of authority by the Assistant Secretary for Rural Development, 7 CFR 2.70.)

Dated: August 30, 1978.

JAMES E. THORNTON,
Associate Administrator, Farmers Home Administration.

[FR Doc. 78-25435 Filed 9-8-78; 8:45 am]

[3128-01]

Title 10—Energy

CHAPTER II—FEDERAL ENERGY ADMINISTRATION*

PART 205—ADMINISTRATIVE PROCEDURES AND SANCTIONS

1978 Interpretations of the General Counsel

AGENCY: Department of Energy.

ACTION: Notice of interpretations.

SUMMARY: Attached are the Interpretations issued by the Office of the General Counsel of the Department of Energy under 10 CFR Part 205, Subpart F, during the period August 1, 1978, through August 31, 1978. See appendix below for subjects and interpretations issued.

FOR FURTHER INFORMATION CONTACT:

Diane Stubbs, Office of the General Counsel, Department of Energy, Room 1121, 12th and Pennsylvania Avenue NW., Washington, D.C. 20461, 202-566-9070.

SUPPLEMENTARY INFORMATION: Interpretations issued pursuant to 10 CFR Part 205, Subpart F, are published in the FEDERAL REGISTER in accordance with the editorial and classification criteria set forth in 42 FR 7923, February 8, 1977, as modified in 42 FR 46270, September 15, 1977.

These Interpretations depend for their authority on the accuracy of the factual statement used as a basis for the Interpretation (10 CFR § 205.84(a)(2)) and may be rescinded or modified at any time (§ 205.85(d)). Only the persons to whom Interpretations are addressed and other persons upon whom Interpretations are served are entitled to rely on them (§ 205.85(c)). An Interpretation is modified by a subsequent amendment to the regulation(s) or ruling(s) interpreted thereby to the extent that the Interpretation is inconsistent with the amended regulation(s) or ruling(s) (§ 205.85(e)). The Interpretations published below are not subject to appeal.

Issued in Washington, D.C., September 1, 1978.

EZRA C. LEVINE,
Acting Assistant General Counsel for Interpretations and Rulings, Office of General Counsel.

APPENDIX

No.	To	Date	Category
1978-48	The Gulf Cos., Mobil Oil Corp	August 3	Allocation.
1978-49	Amoco Chemicals Corp., Inc	August 3	Do.
1978-50	Standard Oil Co. (Indiana), Gulf Oil Corp., Shell Oil Co.	August 9	Oil import.
1978-51	Apco Oil Corp	August 11	Price.
1978-52	National Cooperative Refinery Association	August 14	Do.
1978-53	Mobil Oil Corp	August 17	Do.
1978-54	Atlantic Richfield Co	August 24	Allocation.
1978-55	Hawaiian Independent Refinery, Inc	August 25	Allocation/price.
1978-56	Mack C. Colt, Inc	August 25	Do.

INTERPRETATION 1978-48

To: The Gulf Cos.
Mobil Oil Corp.
Date: August 3, 1978.
Rules interpreted: 10 CFR 211.67(a)(4), 211.62.
Code: GCW—AI—Entitlements program, California lower tier crude oil.

FACTS

The Gulf Cos. (Gulf) and the Mobil Oil Co. (Mobil)[1] have submitted independent requests for interpretation regarding the proper treatment under the entitlements program of crude oil produced from the Dos Cuadras Field, a federally leased field located more than 3 miles from the California coast in the Santa Barbara Channel. These firms each own a 25 percent gross interest in producing Platforms A, B and C which are situated in the offshore Dos Cuadras Field. Gulf and Mobil seek an interpretation which permits them to treat crude oil produced from the Dos Cuadras Field between January 1, 1978, and May 31, 1978, as California lower tier crude oil for purposes of 10 CFR 211.67(a)(4). This section reduces refiners' entitlement obligations for lower tier crude oil produced and refined in California.

ISSUE

Whether, for purposes of 10 CFR 211.67(a)(4), the definition of "California lower tier crude oil" at 10 CFR 211.62, in effect from January 1, 1978, to May 31, 1978, included lower tier crude oil produced from Federal offshore leases located off the coast of California and beyond the 3-mile seaward boundary of that State.

INTERPRETATION

It has been concluded that the crude oil produced by Gulf and Mobil from the Dos Cuadras Field in the Santa Barbara Channel from January 1, 1978, through May 31, 1978, was not "California lower tier crude oil" under the definition in 10 CFR 211.62 in effect during that period. Thus, neither Gulf nor Mobil may be issued additional entitlements for the Dos Cuadras crude oil produced during that period pursuant to § 211.67(a)(4).

The domestic crude oil allocation program (the "entitlements program") as set forth in § 211.67 was promulgated to achieve an equitable distribution of the benefits of lower priced domestic crude oil among all segments of the petroleum industry: 39 FR 39741 (November 11, 1974); 39 FR 31650 (August 30, 1974). Section 122 of the Energy

*EDITORIAL NOTE: Chapter II will be renamed at a future date to reflect that it contains regulations administered by the Economic Regulatory Administration of the Department of Energy.

[1] Both firms are refiners of crude oil as defined in 10 CFR 211.51 and subject to the mandatory price and allocation regulations, 10 CFR Parts 211 and 212.

Conservation and Production Act, as amended (ECPA), Pub. L. 94-385 (August 14, 1976),[2] required amendments to the Mandatory Petroleum Allocation and Price Regulations to adjust the lower tier ceiling prices for low gravity California crude oil.[3] In addition, the Department of Energy (DOE) later issued amended regulations to the entitlements program which increased the entitlement benefit for low gravity lower tier crude oil produced in California by $1.74 per barrel.[4] For the period January 1, 1978, through May 31, 1978, § 211.62, a key portion of this amendment, provided that:

"'California lower tier crude oil' means crude oil produced *in California* with a gravity of 25.9 degrees API or below that is subject to the lower tier ceiling price rule set forth in § 212.73 or Part 212 of this chapter (emphasis added)."

Section 211.67(a)(4), which outlines the entitlements benefits for refiners of California lower tier crude oil, provides:

"For each month, commencing with the month of January 1978, the number of entitlements issued under paragraph (a)(1) of January 1978, the number of entitlements issued under paragraph (a)(1) of this section to each refiner shall (i) be increased by the number of barrels of California lower tier crude oil included in its adjusted crude oil receipts in that month multiplied by a fraction equal to $1.74 divided by the entitlement price for that month; and (ii) be decreased by a number of entitlements equal to (A) the number of barrels of imported crude oil and Alaska North Slope crude oil that are included in its adjusted crude oil receipts in that month with respect to its refineries located in the State of California multiplied by (B) the aggregate increase in entitlement issuances for all refiners calculated pursuant to subparagraph (a)(4)(i) above, divided by the total number of barrels of imported crude oil and Alaska North Slope crude oil included in the adjusted crude oil receipts for that month for all refiners with respect to refineries located in the State of California."

The notice of proposed rulemaking[5] and the preamble to the final rule which promulgated §§ 211.62 and 211.67(a)(4) make it clear that these regulations were intended to enable producers of low gravity, high sulfur lower tier crude oil in California to receive their lawful ceiling prices and to provide incentives to refiners to process such oil. The offsetting increase in refiners' crude oil costs was limited to crude oil processed at refineries located in California.

Subsequent to the submission of the original requests for interpretation, DOE modified the definition of "California lower tier crude oil." The definition was amended to provide:

"California lower tier crude oil means crude oil produced in California (*or produced from Federal lands off the shores of California*) that is subject to the lower tier ceiling price rule set forth in § 212.73 of Part 212 of this chapter."[6] (Emphasis added.)

The preamble to the regulations sets forth the rationale behind this amendment:

"It was called to our attention in this proceeding that there is crude oil production occurring outside the territorial limits of the State of California *which ought to be provided the same adjustments as have been provided to production occurring within the State of California, viz.* production from federal leases on the Outer Continental Shelf (OCS) off the coast of California. This crude oil is produced from the same geological producing basins as that produced in California, is generally of the same quality as that produced in California, and is transported to California after production and must compete in the same crude oil markets as crude oil produced in California. If the adjustments adopted today were given only to production occurring within the State of California proper, this OCS crude oil could suffer an unwarranted competitive detriment relative to California production.

"Accordingly, we have determined that crude oil production eligible *for the adjustments adopted today* should include such OCS production. Thus, the definitions of California upper tier crude oil and California lower tier crude oil in § 211.62, which are subject to the adjustments of § 211.67(a)(4), include crude oil produced from the OCS offshore California."[7] (Emphasis added.)

In their submissions, Mobil and Gulf seek a *clarification of the geographic scope of* the definition of California lower tier crude oil as it existed prior to June 1, 1978. The requesters view the amendment of § 211.62 as merely a clarification of long standing Federal policy. However, an analysis of the development of the regulation in question leads to the opposite conclusion.

In determining the boundary of California for purposes of the Mandatory Petroleum Allocation and Price Regulations, it is necessary to look to the Submerged Lands Act, 43 U.S.C. 1301 et seq., which establishes the seaward boundaries for each coastal State.[8] The Submerged Lands Act unconditionally grants each coastal State the right to claim a seaward boundary out to a line three geographical miles distant from its coast line.[9] *See United States* v. *Louisiana*, 389 U.S. 155 (1967); *reh. denied* 389 U.S. 1059 (1968). Thus, since the seaward boundaries of each coastal State, including California, are established by the Submerged Lands Act, crude oil produced from leases outside of that statutory boundary (unless specifically included by definition) cannot be considered as produced within that State.

In the present case, Gulf and Mobil have stated that the producing platforms in question are located more than 3 miles from the California coast line. Thus, for purposes of the Submerged Lands Act which governs the seaward boundary of each coastal State, the Gulf and Mobil producing platforms are beyond the statutory boundary of California. Accordingly, crude oil produced from Platforms A, B, and C in the Santa Barbara Channel was not produced "in California" for the purposes of § 211.62 prior to its amendment.

Moreover, the June 1978 amendments to § 211.62 support this conclusion. As noted previously, the preamble to the revised definition of California lower tier crude oil demonstrates the intent of the DOE to include crude oil produced from offshore California Federal leases which had previously been excluded from entitlements benefits by that definition. The DOE further evidenced its intent that this amended definition of California lower tier crude oil be effective prospectively only, by stating:

"[w]e have determined that the amendments adopted hereby should be effective for crude oil receipts and runs to stills commencing on June 1, 1978 * * *. [W]e have also concluded * * * that insufficient grounds exist for making these amendments generally retroactive to receipts and runs occurring in months prior to June 1978."[10]

It is therefore clear that until § 211.62 was revised to include crude oil produced "from Federal lands off the shores of California" such crude oil, including crude oil produced from the Dos Cuadras Field, was not encompassed by the definition of California lower tier crude oil.

However, the requesters further contend that the crude oil produced from the Dos Cuadras Field should have been treated as California lower tier crude in that: it is indistinguishable chemically from other crude oil produced in California; it is overpriced relative to its quality like other California high sulfur, low gravity crude oils; it is refined and marketed in California; crude oil from offshore leases has historically never been distinguished from other domestic crude oil by DOE; and Dos Cuadras crude oil is reported on the State of California oil and gas report. Although Gulf and Mobil may be correct in their assertions that the crude oil produced from the Dos Cuadras Field is similar if not identical to crude oil produced within the regulatory boundary limits of California, these arguments are essentially equitable in nature.

In an interpretation proceeding the Department of Energy is limited to explaining the meaning of specific regulatory provisions. Part 205, Subpart D, provides the procedures for applying for an exception from a regulation based on an assertion of serious hardship or gross inequity.[11] Therefore, the equitable arguments advanced by Mobil and Gulf may be raised in the context of an application for an exception.

INTERPRETATION 1978-49

To: Amoco Chemicals Corp., Inc.
Date: August 3, 1978.
Rules interpreted: 10 CFR 211.9, 211.82, 211.85, 211.86.

[2] 42 U.S.C.A. 6201 et seq. (West 1977).
[3] 41 FR 48324 (Nov. 3, 1976).
[4] 42 FR 62897 (Dec. 14, 1977).
[5] 42 FR 15419 (Mar. 22, 1977).
[6] 43 FR 26539, 26543 (June 20, 1978).
[7] Id. at 26539.
[8] The Submerged Lands Act was enacted in response to the Supreme Court's holding in *United States* v. *California*, 332 U.S. 19 (1947). In *California* the Supreme Court determined that States did not own the submerged lands adjacent to their coast lines, and further determined that the United States held the paramount rights to those lands.
[9] If a State has a prior history of a seaward boundary beyond 3 miles, the Submerged Lands Act permits it to claim the boundary as it existed at the time that State became a member of the United States. The Supreme Court has held that only Texas and Florida qualify for this more expansive grant. *See United States* v. *Louisiana, Texas, Mississippi, Alabama, and Florida*, 363 U.S. 1 (1960).
[10] Id. at 26544.
[11] The precedent established in *American Petrofina, Inc.*, Interpretation 1978-31, 43 FR 29532 (July 10, 1978) is inapplicable to this case since it cannot be said as a matter of law that the plain and unambiguous meaning of the definition of California lower tier crude oil prior to its amendment in June 1978 is "plainly repugnant to or inconsistent with [the] purpose" of the regulation.

Code: GCW—AI—Supplier/purchaser relationship.

FACTS

Amoco Chemicals Corp., a wholly-owned subsidiary of Standard Oil Co. (Indiana), is engaged in the manufacture and marketing of petrochemical products. In 1973 Amoco Chemicals began construction of two olefins facilities at Chocolate Bayou, Tex., which are designed to use feedstocks of * * * propane mix. Propane is required for the manufacture of petrochemicals * * *. The first olefins facility became operational on March 24, 1975, and the second, on September 25, 1977. Amoco Chemicals began purchasing propane for the first facility from Amoco Oil Co. (also a wholly owned subsidiary of Standard Oil Co. of Indiana), on July 20, 1973 (nearly 2 years prior to the plant's completion) in order to have sufficient propane reserves to operate the plant. On October 23, 1973, Amoco Chemicals executed a long-term petrochemical feedstock supply agreement whereby Amoco Oil Co. was to supply Amoco Chemicals with its requirements of * * * propane, * * *.

Under the Mandatory Petroleum Allocation Regulations, Amoco Oil is a "supplier" of propane, and Amoco Chemicals is a "wholesale purchaser-consumer" of propane as those terms are defined in § 211.51.

ISSUE

Does Amoco Chemicals, which did not begin purchasing propane from Amoco Oil until July 20, 1973, have a base period supplier-purchaser relationship for propane with Amoco Oil?

INTERPRETATION

It has been determined that no base period supplier/purchaser relationship exists between Amoco Oil and Amoco Chemicals.

Under the Mandatory Petroleum Allocation Regulations, supplier/purchaser relationships for certain covered products are required to be maintained for the duration of the allocation program. Section 211.9 states in part:

"(a) *Supplier/wholesale purchaser relationship.* (1) Each supplier of an allocated product shall supply all wholesale purchaser-resellers and all wholesale purchaser-consumers which purchased or obtained that allocated product from that supplier during the base period as specified in subparts D through K of this part.

* * * * * *

"(2)(ii) Unless otherwise provided in this part or directed by FEO, the supplier/wholesale purchaser-consumer relationships defined by specific dates or base periods or otherwise imposed pursuant to this part shall be maintained for the duration of the Mandatory Petroleum Allocation Program and may not be revised or otherwise terminated except that any such relationship may be terminated by the mutual consent of both parties."

As noted in the above regulation, the base period controls the establishment of supplier/purchaser relationships. The base period for propane is defined in § 211.82 as "each calendar quarter during the period April 1, 1972, through March 31, 1973, which corresponds to the present calendar quarter except that for the period June 1, 1974; through June 30, 1974, purchasers of propane may, at their option, use the period June 1, 1972, through June 30, 1972, as the base period." Under the facts presented Amoco Chemicals began purchasing propane on July 20, 1973. Since this date does not fall within the base period for propane, no supplier/purchaser relationship exists between Amoco Oil and Amoco Chemicals.

Amoco Chemicals contends that it is entitled to an allocation of propane based upon its interpretation of § 211.85(b)(1), as that section read in 1974,[1] and the petrochemical feedstock supply agreement that it executed with Amoco Oil on October 23, 1973, to obtain its requirements of propane. Prior to its amendment on May 6, 1974, § 211.85(b)(1) provided:

"Subject to the provisions of § 211.84(a), propane suppliers and resellers must provide propane for the priority requirements, as set forth in § 211.83 of their priority customers to whom they sold, or with whom they had a contract to sell propane at any time subsequent to August 31, 1973, and priority customers assigned by the FEO. No priority customer or reseller shall receive product from more than one reseller or supplier without advising each such reseller or supplier as to the identity of all others and the share of the priority use each will supply." 39 FR 1924 (January 15, 1974).

Therefore, in addition to the general standard set forth in §§ 211.9-211.13, 211.85(b) added the requirement of supplying propane to *priority* customers. Amoco Chemicals, in its submission, asserts that the provisions of § 211.85(b), as in existence during the brief period prior to May 1974, take precedence over the general standards requiring the maintenance of only base period supplier/purchaser relationships set forth in §§ 211.9-211.13. Amoco has misconstrued this regulation. Section 211.85(b) applied to "priority customers," which until May 6, 1974,[2] were defined in § 211.82 as follows:

"'Priority customers' means those end-users that consume propane (but only to the extent they consume) for the uses listed in § 211.83. Those that can use an alternate fuel are excluded from 'priority customers.'" 39 FR 1924 (January 15, 1974).[3]

In its submission Amoco Chemicals has not demonstrated that it was a priority customer of propane during this time period. The definition of priority customer requires *actual consumption* of propane. Amoco Chemicals began purchasing propane nearly 2 years before its first olefins facility became operational, but it did not actually consume propane until the facility opened. Thus, the provisions of § 211.85(b) could not apply to Amoco Chemicals during that time period since it did not consume propane and therefore was not a priority customer. Moverover, the provisions of § 211.85(b) were intended only to augment the general allocation requirements of §§ 211.9-211.13 and not to supersede them.

Furthermore, even if Amoco Chemicals did meet the definition of "priority customer" set forth in § 212.82, there was no supplier/purchaser relationship between Amoco Oil and Amoco Chemicals during the base period. Section 211.85(b) in effect in 1974 established the priority levels of customers that maintained base period supplier/purchaser relationships, but it did *not* establish these relationships. Although § 211.85(b)(1), when viewed alone, was somewhat unclear during the brief period of January 15, 1974 to May 6, 1974, in referring to contracts to sell propane subsequent to August 31, 1973, there is no ambiguity in the consistent use of the reference point of the "base period" when the Mandatory Petroleum Allocation Regulations are viewed in their entirety. While the base period dates have fluctuated (from Oct. 3, 1972, to Apr. 30, 1973, in early 1974 to the present Apr. 1, 1972, to Mar. 31, 1973), they have never included any time period subsequent to April 30, 1973. See § 211.82. Thus, it is clear that Amoco Chemicals cannot rely on its purchases of propane beginning July 20, 1973, nor its contract of October 23, 1973, with Amoco Oil to obtain an allocation of propane since no supplier/purchaser relationship had been established between the firms during the base period.

It should also be noted that the Mandatory Petroleum Allocation Regulations generally impose strict limitations upon the use of domestically produced propane, and do not generally permit a wholesale purchaser-consumer, such as Amoco Chemicals, to use or obtain domestic propane in excess of its base period volume. See 10 CFR 211.10(g)(8).[4] Under the facts presented, Amoco Chemicals has not established any base period supplier/purchaser relationship. If any division of Standard Oil Co. of Indiana purchased propane during the base period, a base period use has been established for the firm. See 10 CFR 211.11(b). Therefore, if Amoco Chemicals (a wholly owned subsidiary of Standard Oil of Indiana) requires an adjustment to its base period volume for its Chocolate Bayou facilities, it should follow the provisions of 10 CFR 211.13.

INTERPRETATION 1978-50

To: Standard Oil Co. (Indiana), Gulf Oil Corp., Shell Oil Co.

Date: August 9, 1978.

Rules interpreted: Presidential Proclamation 3279, as amended; 10 CFR 213.35.

Code: GCW—OI—Oil import regulations.

FACTS

Standard Oil Co. (Indiana) ("Amoco"), Gulf Oil Co. ("Gulf"), and Shell Oil Co. ("Shell") have submitted independent requests for interpretation regarding the

[1] Section 211.85 was substantially amended on May 6, 1974, 39 FR 15960, and renumbered. The amended version now appears at § 211.86.

[2] Deleted in 39 FR 15960 (May 6, 1974).

[3] Until May 6, 1974, the term end-user included any ultimate consumer of petroleum products. Since that date, wholesale purchaser-consumers have not been included as end-users.

[4] Amoco Chemicals, as a wholesale purchaser-consumer, may not use propane in excess of its base period use for any industrial purpose, including petrochemical feedstock use, unless it is permitted to do so by the Department of Energy, or the additional propane is imported from countries other than Canada. See 10 CFR 211.10(g)(1), 10 CFR 211.12(g)(2). Industrial users (including petrochemical feedstock users) may accumulate propane in inventory pursuant to § 211.86(g)(1) only up to an amount equal to 120 percent of the volume used during the period Apr. 1, 1972, through Mar. 31, 1973, except that propane imported from countries other than Canada is not subject to this limitation. 10 CFR 211.86(g)(3); 10 CFR 211.12(g).

proper calculation of import license fees payable under 10 CFR Part 213. The three corporations are "firms" which import crude oil, unfinished oils, or finished petroleum products into the customs territory of the United States as described in §§ 213.27 and 213.35(a)(1). Each company has obtained licenses for the importation of one or more of these items as provided for in section 3(a)(1)(i)-(ii) of Presidential Proclamation 3279 ("the Proclamation"), as amended, and § 213.35(a)(5).

In their submissions, Amoco, Gulf, and Shell maintain that Part 213 permits the reduction of total import fees paid on crude oil, unfinished oils and finished petroleum products by the total custom duties paid to the U.S. Customs Service on those items. Their requests for interpretation have been combined because of the identical nature of the issues presented and the similarity of arguments advanced by the requesters.

ISSUE

In computing a reduction in license fees for a particular period, do the provisions of 10 CFR Part 213 require importers of crude oil, unfinished oils or finished petroleum products to apply the total custom duties paid to the U.S. Customs Service for all items against license fees paid or owed for all items.

INTERPRETATION

For the reasons set forth below, it has been determined that the provisions of Part 213 and the relevant forms which implement the reduction provision of Proclamation 3279, as amended, now require an importer to reduce its total fees on all crude oil, unfinished oils and petroleum products by the aggregate amount of the total custom duties paid to the U.S. Customs Service for these items.

From 1959 through April 30, 1973, the Mandatory Oil Import Program (the Program) was a system which limited imports of crude oil, unfinished oils and refined petroleum products into the United States on a volumetric basis. The Program was implemented through Presidential Proclamation 3279, 24 FR 1781 (Mar. 12, 1959), pursuant to § 2 of the act of July 1, 1954, 10 U.S.C. 1352a.[1] The Proclamation has been amended numerous times since its promulgation.

Effective May 1, 1973, Proclamation 4210 modified the Proclamation in its entirety by eliminating the volume restrictions on imports of crude oil and by instituting a license fee system. 38 FR 9645 (April 19, 1973). Under the new license fee system, a firm was permitted to import crude oil, unfinished oils and finished petroleum products up to a specified import level on a license fee-free basis, and was required to pay a license fee for any imports of a particular item in excess of its import allocation. The Proclamation also provided for the phasing out of these fee-free licenses.

The provisions of the Proclamation were again amended by Proclamation 4341, 40 FR 3965 (Jan. 27, 1975). Pursuant to this amendment, effective February 1, 1975, supplemental fees on imported crude oil, natural gas products, unfinished oils and all other finished petroleum products were instituted. The supplemental fees were to begin at $1 per barrel, rising to $3 on imports entered on or after April 1, 1975. Proclamation 4341 also reimposed duties on crude and products but permitted a reduction of import fees for net applicable duties paid. At this time § 3(a)(1)(iv) of the Proclamation provided, in pertinent part:

"with respect to the fees imposed . . . the amount of such fees shall be reduced, on a monthly basis, by an amount equal to any applicable duties paid less any drawbacks received during the same period, except that where duty drawbacks exceed the duty paid during that period, the net differences shall be applied to subsequent periods."

Presidential Proclamation 4355, 40 FR 1037 (Mar. 6, 1975), and shortly thereafter Presidential Proclamation 4377, 40 FR 23429 (May 27, 1975), again modified the Proclamation by revising the supplemental fee program. In addition, both Proclamations revised section 3(a)(1)(iv) to permit a reduction in licence fee obligations based upon custom duty payments for petroluem items paid during a preceding 6 month period. Section 3(a)(1)(iv), as revised by Proclamation 4377, provided in pertinent part:

"with respect to the fees imposed . . ., the amount of such fees shall be reduced, on a monthly basis, by an amount equal to any applicable duties paid less any drawbacks received during the same period charged against imports made on or after February 1, 1975, except that where duty drawbacks exceed the duty paid during that period, the net differences shall be applied to subsequent periods; provided that when the duty less drawbacks exceeds the fee imposed, the Administrator may provide that any excess may be used to reduce fees payable in subsequent months, such extended period not to exceed 6 months."

The final modification of the Proclamation which is relevant to the issue under consideration was Proclamation 4412, 41 FR 1037, (Jan. 6, 1976), as revised by Executive Order 12038 43 FR 4957 (Feb. 7, 1978), which eliminated the supplemental fee effective Dec. 22, 1975 and revised the offset provision (currently section 3(a)(1)(iii)) to provide in part:

"with respect to the fees imposed . . ., the amount of such fees shall be reduced, *in such manner as may be provided by the Secretary*, by an amount equal to any *applicable* duties." (Emphasis added.)

The Proclamation, therefore, has provided the DOE (and its predecessor agencies) with sufficient authority to design a license fee reduction program which could either offset the aggregate of the customs duties paid by an importer against the total license fees paid in a particular period, or could permit the offset of customs duties for specific items only against license fees for those same items.

The provisions of § 213.35, however, do not clearly favor one approach or the other. That section provides in pertinent part:

"(a)(9) An importer of record who holds a license not issued upon prepayment, may reduce the payments made pursuant to paragraph (c) on a monthly basis, *by sums equal to the sums collected by way of net duties paid* to the U.S. Customs Service, less any duty drawbacks of tariffs paid on imports made on or after February 1, 1975, received during the same period, provided, that said importer certifies the amount of net duties paid and drawback received during that period. Where the duty drawback exceeds the net duty paid during that period, the net difference shall be applied to subsequent periods, provided, that when the duty less drawback exceeds the fee imposed, *any excess duty may be used to reduce fees payable during the subsequent 6 months.*"

* * * * *

"(d)(1) Applications for refund under this paragraph shall be filed in such form as the Director may prescribe.

"(2) Upon application by the importer of record, the Director may reduce or refund fees prescribed pursuant to paragraph (c):

"(i) In the case of licenses issued upon prepayment, for payment to the importer of record, on a monthly basis, *the sums equal to the sums collected by way of net duties paid* to the U.S. Customs Service, less any drawbacks to tariffs paid on imports made on or after February 1, 1975, received during the same period: *Provided*, That said importer certifies the amount of net duties paid and drawback received during that period. Where the duty drawback exceeds the net duty paid during that period, the net difference shall be applied to subsequent periods, provided, that when the duty less drawbacks exceeds the fee imposed, *any excess duty may be used to reduce fees payable during the subsequent 6 months* * * *

"(4) No refunds under this paragraph (d) to an allocation holder shall exceed the fees and supplemental fees paid by such allocation holder." (Emphasis added.).

Although the regulation is not clear, by its terms, the relevant provision of § 213.35 only provides for refunds of "sums equal to the sums collected by way of net duties paid * * *." Such language would not appear to limit the refund of licence fees to customs duties paid for a particular item only. Rather, the more reasonable interpretation is that it permits an aggregation of all licence fees paid in a specific period against customs duties paid for crude oil, unfinished oils and finished petroleum products in that period.

If, as a policy matter, DOE intended that the duty refund provision was to apply only on a product-by-product basis, the regulation is inadequate to implement this intent. Indeed, the interpretive approach outlined above is further supported by the text of the official forms which must be submitted to the DOE in order to receive either a refund of licence fees previously paid or a credit against fees owed. Those forms, the FEA P114-M-O, entitled "Monthly Remittance Advice" and the FEA P116-S-O entitled "Request for Refund of Oil Import Fees" have been used since October of 1975 to report the importation of crude oil, unfinished oils and finished petroleum products during a particular month; to remit the licence fees owed, if any, for those items; and to obtain either an offset of these fees or a refund of prepaid license fees for customs duties paid for these items. Both forms use similar schedules for determining the net import fees which should be paid. This calculation is made by subtracting the total custom duties paid at the time of entry or withdrawal for consumption for shipments in the past 6 months, and not previously deducted from license fees from the licence fees either owed or prepaid in the month of measurement. The schedules of each form and the appended instructions

[1] Additional statutory authority in the area of oil import regulation was granted to the President by section 232 of the Trade Expansion Act of 1962, as amended, 19 U.S.C. 1862.

also provide only for the offset of *aggregate* amounts of license fees against *total* custom duties paid for a specified period. For example, the instruction to Form FEA P114-M-O, § VIII, part II provides:

"This section is designed to present the various summary calculations necessary to determine the proper amount of payment submitted concurrently with this form. First, *the total (gross) fees incurred are adjusted by the figures from appropriate schedules.* Second, *any credit that may pertain to the firm's account,* due to an amount of money paid for Customs duties that had hitherto been unrefundable or undeductible by FEA because it exceeded the amount of fees incurred, *is calculated and applied.*" (Emphasis added.)

Similarly part VII. C. of Form FEA P116-S-O provides for the offset of aggregate amounts of license fees paid against total custom duties for a specified period.[2] Thus, both forms clearly instruct refiners to aggregate both their license fee payments or obligations against their custom duty payments for imported crude oil and petroleum products prior to determining the appropriate reduction (or refund) of the applicable total license fees.

Accordingly, both forms when viewed in the context of the Proclamation and § 213.35 of the Mandatory Oil Import Regulations require an importer to offset the total license fees either owed or prepaid for those items against the total custom duties paid for crude oil, unfinished oils or finished petroleum products during the previous 6-month period.[3]

INTERPRETATION 1978-51

To: Apco Oil Corp.
Date: August 11, 1978.
Rules Interpreted: 10 CFR 212.83(c)(2)(iii)(D); EPAA § 4(b)(2)(A).
Code: GCW-PI-Product Cost Increases; Refiner Price Formula, "B" Factor.

FACTS

Apco Oil Corp. ("Apco") is a refiner subject to the price rules applicable to refiners in 10 CFR Part 212, subpart E. Under these rules, refiners are generally permitted to include the increased costs of crude oil in determining maximum allowable prices. In addition, because a typical refiner will purchase from other refiners quantities of the products it refines from crude oil, in order to supplement its refinery output and for other purposes, refiners are also permitted to include increased cost of "purchased product" in computing maximum allowable prices. Increased costs of crude oil are computed under the "A" factor of the refiner price formula, while increased costs of purchased product are computed under the "B" factor. 10 CFR 212.83(c)(2)(iii).

The refiner price formula, including the "B" factor, is computed separately for each "i" product or product category. Under current regulations, "i" may represent No. 2 oils (i=1), aviation jet fuel (i=2), gasoline (i=3), or all general refinery products (i=4). Apco's interpretation request concerns gasoline, i=3, as purchased product under the "B" factor.

Since December 1, 1976, the "B" factor has generally required the computation of increased costs of the purchased product concerned according to a formula (referred to in this Interpretation as the "A"-type formula) in which the per-unit cost of purchased product in May, 1973 ("base month") is subtracted from the per-unit cost of purchased product in the month of measurement ("current month") and the result is multiplied by the volume of purchased product the current month. However, if the refiner did not purchase product of the "i" category concerned in the base month, or if the per-unit cost of product purchased in that month was unreasonably high (according to a formulation provided), the "B" factor requires the refiner to compute increased cost of purchased product according to an alternative formula (the "Y" formula) which imputes an approximated cost by reference to prices charged by the refiner in sales of the product concerned in the base month.

In the base month, Apco purchased blending materials attributable to the production of gasoline but not gasoline. Apco's imputed cost of gasoline in the base month under the "Y" formula is $ x per gallon, while the actual weighted average cost of blending materials in the base month is $.0441 per gallon lower, or $ x per gallon. If Apco is required to use the "Y" formula, and only the "Y" formula, to compute increased cost of purchased product (*i.e.*, i=3, gasoline), Apco takes the position that it will be unable to recover $.0441 per gallon of increased costs of blending materials because the base cost for the i=3 computation will be $ x per gallon. Consequently, Apco seeks an interpretation that the "B" factor permits, under the anomalous facts presented, use of the "A"-type formula to compute increased costs of blending materials *and* use of the "Y" formula to compute increased costs of gasoline purchased.

ISSUE

If blending materials, but not gasoline, were purchased in the base month, does the "B" factor require the exclusive use of the "Y" formula to compute the increased cost of purchased product (*i.e.*, i=3, gasoline), or may the refiner use the "Y" formula to compute its increased cost of gasoline purchased and the "A"-type formula to compute its increased cost of blending materials?

INTERPRETATION

As amended effective December 1, 1976, the "B" factor requires the use of the "Y" formula in lieu of the "A"-type formula, when "no covered product or products of the type 'i' were purchased or landed" in the base month. Since Apco did not purchase gasoline (i=3) in the base month, it is obligated by the terms of the "B" factor to compute increased cost of purchased product for the i=3 calculation under the "Y" formula. There is no warrant for modification of the terms of the "B" factor, through the interpretive process, to permit Apco to use both the "A"-type formula and the "Y" formula to compute increased cost of purchased product for i=3. Apco may seek an exception if the "B" factor in this instance results in gross inequity or serious hardship.

The history of the "B" factor, relevant to the present inquiry, may be said to date from an amendment to the refiners' price formula promulgated by the Cost of Living Council effective November 30, 1973. 38 FR 33577 (December 6, 1973). This amendment, which was continued without substantive change under the petroleum price regulations of the Federal Energy Administration (FEA) issued January 14, 1974, 39 FR 1924, 1955 (January 15, 1974), provided as follows:

$$"B_i^t = c_i^t - c_i^o - Y_i (q_i^t - q_i^o)$$

which is the total increased cost of a specific covered product or products of the type "i" purchased or landed in the period "t" (the month of measurement).

Where:

c_i^o=The total cost of a covered product or products of the type "i" purchased in the period "o" (the month of May 1973). For imported products, the cost of products of the type "i" landed in the period "o" (the month of May 1973).

c_i^t=The total cost of a covered product or products of the type "i" purchased in the period "t" (the month of measurement). For imported products, the cost of products of the type "i" landed in the period "t" (the month of measurement).

q_i^o=The total quantity or volume of a covered product or products of the type "i" purchased in the period "o" (the month of May 1973). For imported products of the type "i", the total quantity or volume landed in the period "o" (the month of May 1973).

q_i^t=The total quantity or volume of a covered product or products of the type "i" purchased in the period "t" (the month or measurement). For imported products of the type "i", the total quantity or volume landed in the period "t" (the month of measurement):

Y_i=The lowest price at or [below] [1] which at least 10% of the product or products of type "i" were priced in transactions during the month of May 1973 or, if none occurred in that month, in the month next preceding May 1973 in which such transactions occurred.

Alternatively, the cost of the product or products concerned during the month of May 1973 may be used if computed by use of accounting procedures generally accepted and consistently and historically applied by the firm concerned and provided that the Council has approved in writing of the cost figures used."

The FEA at a later date explained that a number of different values could be assigned to the "Y_i" sub-factor in the foregoing formula to establish the base cost of the "i" category concerned. They were, (1) the actual unit cost of products purchased in the base month (cost divided by volume), (2) the lowest price at or below which at least 10% of the product was priced in transactions in the base month, as prescribed in the

[2] Like the form previously discussed, FEA P116-S-O directs the importer to aggregate fees on all items and to aggregate all duties. "C. Schedule B: Adjustments for Duty Payments to and Receipts from U.S. Customs" which instructs the importer to enter one sum in "the Grand Total box", the amount allowable for customs duty payments.

[3] However, it should also be noted that Proclamation 3279, as amended by Proclamation 4412, would permit the DOE, after an appropriate rulemaking proceeding, to revise and amend § 213.35 to require reductions of license fees for custom duties paid on an item-by-item basis rather than on an aggregate basis.

[1] "Above," in the actual definition of Y_i. The context requires "below," to achieve the "lowest tenth percentile price" in May, 1973. *See* Clarification 1977-1, February 2, 1977, Federal Energy Guidelines Enforcement Manual ¶56,101.

formula, and (3) the weighted average unit cost of product refined and purchased in the base month.[2] Initially, Apco utilized the cost of producing gasoline in computing the "Y_i" sub-factor, and recovered under the "A" factor of the refiners' formula the increased cost of blending materials in addition to the increased cost of crude oil.

Effective March 1, 1975, in conjunction with a number of amendments to the refiner price formula, the definition of "B_i" was amended to include the following sentence:

> "The cost of a specific covered product or products of the type 'i' shall include the cost of a specific covered product or products not of the type 'i' that are purchased and refined or blended and that are attributable to the production of the covered product or products of the type 'i.'"

40 FR 10444 (March 6, 1975).

Finally, after a regulation amendment effective December 1, 1976 (41 FR 54919, December 16, 1976), the "B" factor read in relevant part as follows:

$$B_i = B_i^t + B_i^s + B_i^r$$

* * * * *

$$B_i^t = q_i^t \left(\frac{c_i^t}{q_i^t} - \frac{c_i^o}{q_i^o} \right)$$

except that where, in the period "o" no covered product or products of the type "i" were purchased or landed or, where

$$c_i^o / q_i^o$$

is greater than Y_i:

$$B_i^t = q_i^t \left(\frac{c_i^t}{q_i^t} - Y_i \right)$$

"B_i" is the total increased cost of the specific covered product or products of the type "i" purchased or landed in the period "t," provided such cost is not included in computing "A_i". The cost of a specific covered product or products of the type "i" shall include the cost of a product or products not of the type "i" which was a covered product as of May 31, 1976 and is purchased and refined or blended, that is attributable to the production of the covered product or products of the type "i". The cost and quantity of covered products purchased or landed that are consumed as refinery fuel shall be excluded from this amount.

Where:

c_i^o=The total cost of a covered product or products of the type "i" purchased or landed in the period "o".

c_i^t=The total cost of a covered product or products of the type "i" purchased or landed in the period "t".

q_i^o=The total quantity or volume of a covered product or products of the type "i" purchased or landed in the period "o".

q_i^t=The total quantity or volume of a covered product of the type "i" purchased or landed in the period "t".

Y_i=The lowest price at or [below][3] which at least 10 percent of the product or products of type "i" were priced in transactions during the month of May 1973, or, if no transactions occurred in that month, the month next preceding May 1973 in which such transactions occurred.

The notice of proposed rulemaking and the notice of final rulemaking with respect to the amendment to the "B" factor effective December 1, 1976, indicate that the purpose of that amendment was simply to pattern the computation of the "B" factor more closely to the computation of the "A" factor by the use of actual cost figures relating to purchased products, and to restrict the use of the "Y" formula (a cost *approximation* formula) to cases in which use of an approximate cost figure is appropriate. Previously, the "Y" formula was used in all cases, and the rulemaking notices concluded that "use of an approximate cost figure where an actual representative cost figure is available is inappropriate." 41 FR 21933 (May 23, 1976), 41 FR 54919 (Dec. 16, 1976). Accordingly, the use of the "Y" formula (modified to eliminate the cost-of-product alternative) was restricted to those exceptional cases in which "no product was purchased during May 1973 or where the per unit cost of product purchased during May 1973 was unrepresentatively high, that is, exceeded the lowest price at which at least 10 percent of the product was priced in transactions during that month." 41 FR 54919 (Dec. 16, 1976). In all other cases, the "B" factor amendment required the use of actual cost data under the "A"-type formula.

The actual terms of the "B" factor, both before and after its amendment, as well as the preambles cited above, appear plainly to indicate that the test of whether "product" was purchased in May 1973, was intended to be based on purchases of "the specific covered product" concerned—i.e., gasoline, for purposes of this interpretation, and not on purchases of blending materials used to produce gasoline. The term "covered product or products of the type 'i'"—a term not well chosen to indicate blending materials—is employed throughout the amended "B" factor, including the definition of "Y_i." That definition refers to the price at which "the product or products of the type 'i'" were priced in transactions in May 1973. This seems clearly to be a reference to sales of the finished product only (*i.e.*, gasoline), particularly since blending materials are normally purchased for refinery use rather than resale as such. The very same terminology is used in that portion of the "B" factor which describes those two cases in which the "Y" formula must be used, including the case "* * * where, in the [base month], no covered product or products of the type 'i' were purchased or landed. * * *"

The provision permitting the cost of "products not of the type 'i'" (*i.e.*, blending materials) to be included in "B" factor computations was adopted effective March 1, 1975, at a time when the "Y" formula was used in all cases. This provision was not modified at the time of the amendment effective December 1, 1976, and thus had no connection with the test of whether the "A"-type formula or the "Y" formula is applicable. This fact, plus the considerations just noted, indicate that this provision should not be construed to mean that the purchase of blending materials in the base month constitutes the purchase of "product of the type 'i,'" for the purpose of determining whether the "A"-type formula or the "Y" formula applies. For all the foregoing reasons, it is concluded that the test of whether the "A"-type formula or the "Y" formula is to be used is based on whether Apco purchased *gasoline* in the base month.

Since Apco did not purchase gasoline in the base month, Apco must use the "Y" formula in computing all purchased product costs for gasoline. The "B" factor by its literal terms plainly permits the use of *either* the "A"-type formula or the "Y" formula, not both, and unambiguously requires the use of the "Y" alternative when "no covered product or products of the type 'i' were purchased or landed" in the base month. Even if the "B" factor were interpreted as meaning that the purchase of blending materials in the base month was a purchase of gasoline in the base month, the result would merely be that Apco would be required, under the clear terms of the regulation, to compute all increased costs of purchased product, whether of the type "i" or associated blending materials not of the type "i," under the "A"-type formula. Under no circumstances does the "B" factor call for or allow the use of one formula in computing the increased costs of gasoline purchased and the other formula for computing increased costs of purchased blending materials associated with the production of gasoline.

Apco points to statements in the final rulemaking notice concerning the amendment to the "B" factor to the effect that the purpose of the amendment was to more accurately "reflect a firm's total increased cost of purchased product incurred. * * *" Since the "B" factor includes blending materials as a cost of purchased product, and since Apco's interpretation apparently results in a more accurate reflection of increased costs of both blending materials and gasoline purchased, Apco concludes that its interpretation is consistent with the overall purpose of the amendment.

The difficulty with this approach is that it construes the purpose of the amendment too broadly and appears to disregard the regulatory provisions and formulas actually adopted to achieve a more accurate reflection of purchased product cost increases. As previously stated, the specific purpose of the reform instituted under the amendment was adoption of an "A"-type formula for "B" factor computations in most instances, reserving use of the less precise "Y" formula for exceptional cases. The amendment did not consider whether there should be some *further* reform in the "B" factor to provide for the case in which, due to purchase of blending materials in the base month but not gasoline, use of the "Y" formula to compute all increased costs of purchased product may not permit full product cost recovery.[4]

[2] Clarification 1977-1.

[3] See note 1, above.

[4] Clarification 77-1, February 2, 1977, Federal Energy Guidelines Enforcement Manual ¶ 56,101, permits DOE auditors to accept use of separate "Y" factors for "subproducts" within a type "i," rather than a single "Y" factor for all product of the type "i." No explanation or rationale is given for

Footnotes continued on next page

Apco also cites in support of its position the fact that the Emergency Petroleum Allocation Act of 1973, as amended (EPAA), Pub. L. No. 93-159 (Nov. 27, 1973) [5] requires, in section 4(b)(2)(A), the promulgation of regulations providing for dollar-for-dollar pass-through of net increases in costs of crude oil, residual fuel oil, and refined petroleum products. In our view, the command of section 4(b)(2)(A) does not necessarily require DOE, through the interpretive process, to recast or reformulate a regulation in an anomalous case when the regulation concerned was designed to provide and clearly does provide results consistent with statutory requirements in most cases.[6] If DOE determines that the intent and literal terms of the regulation are sufficiently clear to preclude adoption of the interpretation sought, the petitioner may seek an exception to obtain relief.[7]

Review of Apco's case under exceptions procedures is also appropriate because it will permit examination of the extent to which Apco's claim of inability to recover all increased costs of blending materials may be offset by "B" factor provisions which permit or may have permitted more than a strict dollar-for-dollar pass-through of increased costs. For example, because the "Y" formula imputes a base cost for purchased product based on the refiner's sales of that product in the base month, a fairly generous base cost level may have resulted in a particular case compared with other refiners' actual base month costs or the particular refiner's actual cost of purchased product in April or June of 1973. If this is the case, it would be appropriate to take into account the advantage which has accrued to the refiner concerned through use of the "Y" formula before and after December 1, 1976. Apco may also have benefited by having passed through increased costs of blending materials under the "A" factor prior to December 1, 1976, while in effect recovering those increased costs indirectly under the price-based "Y" formula, since the price in sales of a finished product normally reflects the cost of such component elements as blending materials. A claim of inequity may be rejected if the firm concerned has received substantial benefits by virtue of the regulatory scheme which outweigh or compensate for the inequity claimed. *See Crown Central Petroleum Corp.*, 2 FEA ¶ 83,026 (January 28, 1975).

Footnotes continued from last page

this. However, Clarification 77-1 indicates that the use of separate "Y" factors for "subproducts" was permitted under the instructions to an early version of Form FEA P110-M-1 and under the P110-M-1's predecessor, the Form FEO-96. This suggests that Clarification 77-1 condoned the use of separate "Y" computations only because this apparently had been allowed under earlier reporting forms. Accordingly, Clarification 77-1 should not be viewed as precedent for other computational innovations under the "B" factor which were not sanctioned in reporting forms. This admonition is particularly appropriate in connection with Apco's use of the "Y" formula for some "subproducts" and the "A"-type formula for others, since Clarification 77-1 relates exclusively to "Y" formula computations.

[5] 15 U.S.C. 751 *et seq.* (1976).

[6] *Cf. Kansas-Nebraska Natural Gas Co., Inc.*, Interpretation 1978-41, 43 FR 29548, 29550 (July 10, 1978), in which DOE stated, in connection with computation of natural gas shrinkage (product) costs under 10 CFR 212.166(b)(3), that "the fact that the method of valuing costs is not as precise in individual cases as could be formulated does not mean that the valuation method violates the dollar-for-dollar passthrough requirement. Computation of shrinkage costs as presently authorized generally and reasonably values raw material prices in dollars."

[7] With regard to the granting of exceptions relief on a retroactive basis, in cases involving significant administrative delay occasioned by the filing of a request for interpretation with respect to the matter at issue, *see Standard Oil Company (Indiana)*; 1 DOE ¶ (July 19, 1978).

INTERPRETATION 1978-52

To: National Cooperative Refinery Association.

Date: August 14, 1978.

Rules Interpreted: § 212.83(c)(2)(iii)(E).

Code: GCW-PI-Refiner Price Formula, "N" Factor; Non-Product Cost Increases; Accounting Practices.

FACTS

National Cooperative Refinery Association (NCRA), owner and operator of a crude oil refinery at McPherson, Kans., and a "refiner" subject to the provisions of 10 CFR Part 212, Subpart E, is contemplating a $37.5 million capital improvement program for the refinery. The program consists entirely of improvements to refinery and storage capacity and equipment, including a naphtha hydrotreating and reforming unit with related facilities which is intended to increase the octane rating of the naphtha which is blended into gasoline and to increase the output of unleaded gasoline.

NCRA desires to finance the acquisition or use of facilities and equipment under this capital improvement program under an arrangement which would meet one or more of the four alternative criteria for a "capital lease" set forth in Statement of Financial Accounting Standards No. 13 of the Financial Accounting Standards Board (FASB No. 13). FASB No. 13 is premised on the view that a lease that transfers substantially all of the risks and benefits of ownership of property should be accounted for by the lessee as an acquisition of an asset and the incurrence of an obligation and by the lessor as a sale or financing, notwithstanding retention of legal title by the lessor. The assets recorded under a lease meeting the requirements for a "capital lease" may be depreciated by the lessee. FASB No. 13 also authorizes allocation of lease payments between reduction of the obligation and interest expense.

FASB states that it prefers to use the financing method reflected by a "capital lease" because the rate of interest thereunder would be less to NCRA than that under conventional financing. However, before NCRA commits itself to this financing approach, the firm desires assurance that the depreciation and interest expenses incurred under such a financing arrangement can be treated as non-product costs under Subpart E of 10 CFR Part 212.

NCRA does not file Form 10-K with the Securities and Exchange Commission or an analogous report with a State regulatory agency. NCRA has not previously utilized "capital lease" financing methods.

ISSUE

Whether the depreciation and interest expense incurred by NCRA in a "capital lease" which conforms to FASB No. 13 can be treated as non-product costs pursuant to 10 CFR 212.83.

INTERPRETATION

NCRA may include in its non-product cost calculations the amounts of depreciation and interest expense which qualify as such under FASB No. 13, in connection with its refinery capital improvement program.

The price regulations applicable to refiners in 10 CFR Part 212, Subpart E, allow a refiner to pass through certain non-product cost increases pursuant to the "N" factor of the refiner price formulae set forth in § 212.83(c)(2) (i) and (ii). Currently, under § 212.83(c)(2)(iii)(E), a cost must fall within one of the following categories to qualify as a non-product cost for this purpose: Refinery fuel, labor, additive, utility, interest, container, tax, maintenance, depreciation, and overhead cost.

All non-product costs must be incurred and must be computed "according to the generally accepted accounting practices historically and consistently applied by the firm concerned." Beyond this, there are no special rules or limitations applicable to interest cost in § 212.83(c)(2)(iii)(E). Depreciation cost is limited to "depreciation of refinery and storage capacity and equipment installed." In addition, in cases in which the firm concerned does not file Form 10-K with the Securities and Exchange Commission or an analogous report with a state regulatory agency, the accounting procedures used to compute depreciation cost must be calculated according to generally accepted accounting practices historically and consistently applied by the firm concerned "for certified annual financial reports prepared by an independent accounting firm."

Since NCRA's capital improvement program consists entirely of improvements to refinery and storage capacity and equipment, depreciation costs in connection therewith qualify as allowable depreciation costs under § 212.83(c)(2)(iii)(E) as long as they are computed according to generally accepted accounting practices historically and consistently applied by NCRA in its certified annual financial reports prepared by independent accountants.

NCRA acknowledges that the charging of depreciation under the "capital lease" proposal does not, strictly speaking, reflect an accounting practice "historically and consistently applied" by NCRA since NCRA has not previously undertaken the "capital lease" financing method. On the other hand, it does not necessarily follow that a "capital lease" is inconsistent with NCRA's historic accounting practices merely because the arrangement would represent a new financing approach to NCRA. Indeed, FASB No. 13 suggests a high degree of conformity between a firm's historic accounting practices and the "capital lease" method by providing that assets under a "capital lease" are to be amortized "in a manner consistent with the lessee's normal depreciation policy for owned assets" (except that the amortization period must conform with the term of the lease in certain instances). These considerations, together with our understanding that FASB No. 13 sets the standard for lease accounting practices followed by the accounting profession, lead to the conclusion that NCRA's use of "capital lease" ar-

rangements in accordance with FASB No. 13, as long as consistently applied by NCRA in its certified annual financial reports prepared by independent accountants, satisfies the accounting practice requirements of § 212.83(c)(2)(iii)(E).

Therefore, should NCRA finance the capital improvement program as described above under a "capital lease" as set forth in FASB No. 13, and should the depreciation and interest expense of that program computed in accordance with FASB No. 13 be reported as such in the firm's certified annual financial reports prepared by independent accountants, NCRA may consider such costs as allowable depreciation and interest in accordance with § 212.83(c)(2)-(iii)(E).

INTERPRETATION 1978-53

To: Mobile Oil Corp.
Date: August 17, 1978.
Rules Interpreted: 10 CFR 212.83(h)(2) (i) and (iv).
Code: GCW-PI-Equal Application Rule, Refiner Gasoline Price Variation Rules

FACTS

Mobile Oil Corp. ("Mobile") is a refiner subject to the petroleum price regulations applicable to refiners in 10 CFR Part 212, Subpart E. Mobile markets motor gasoline ("gasoline") nationally at a variety of levels of distribution, including sales to independent retail dealers and sales to ultimate consumers through Mobile-operated retail gasoline service stations.

Mobile seeks clarification of the "retail price equalization" rule in § 212.83(h)(2)(iv), applicable to sales of gasoline by refiners.

ISSUES

(1) Whether the "retail price equilization" rule constitutes an exception to the "equal application" rule, and (2) if so, whether the "retail price equalization" rule permits a refiner to institute price variations (within the three-cent-per-gallon maximum) between individual refiner-operated service stations to reflect local market conditions, without penalty under the "equal application" rule, or whether the rule permits only a uniform price variation (within the three-cent-per-gallon maximum) between all refiner-operated service stations, as a group, and all other classes of purchaser, as a group, without penalty under the "equal application" rule.

INTERPRETATION

It was made clear in *Atlantic Richfield Co.*, Interpretation 1978-36 (43 FR 29541, June 9, 1978) that the "retail price equalization" rule, since it became effective April 1, 1974, has constituted an exception to the "equal application" rule. That is, a refiner may pass through in sales of gasoline at refiner-operated service stations a maximum of three cents more than the cost increase passed through to other classes of purchaser (e.g., independent retailers) without penalty under the "equal application" rule.[1]

Interpretation 1978-36 also determined that the "retail price equalization" rule is not "subordinate" to the "regional price variation" rule in § 212.83(h)(2)(i) and thus may not be applied on a region-by-region basis—i.e., in one Petroleum Administration for Defense ("PAD") District and not in another.[2] This holding was based, in part, on the purpose of the "retail price equalization" rule, which, as fully explained in Interpretation 1978-36, was to compensate for a particular price disparity resulting from the differing effects of the regulatory scheme on refiner-operated outlets, as a group, and on independent retail dealers, as a group. The interpretation accordingly characterized the "retail price equalization" rule as allowing "'unequal application' as *between two generic groupings* (a refiner's retail and non-retail classes of purchaser) *regardless of location*" (emphasis added). Therefore, even though Interpretation 1978-36 was issued in response to the specific question whether the three-cent-per-gallon (maximum) price variation under the "retail price equalization" rule could be applied in one PAD District and not in another, without penalty under the "equal application" rule, the necessary implication of Interpretation 1978-36 is that the "retail price equalization" rule does not authorize *any* price variations between individual refiner-operated service stations, without penalty under the "equal application" rule. As Interpretation 1978-36 states, price variations of this sort are permitted only to the extent authorized under the regional price variation rule.[3]

The present interpretation and Interpretation 1978-36 are fully in accord with the interpretation consistently followed by the Federal Energy Administration ("FEA"), a predecessor agency. For example, when the "retail price equalization" rule was restated at § 212.83(h)(2)(iv), the FEA pointed out that the restated provision represented no change from the earlier version of the rule which had been in effect since April 1, 1974. 42 FR 22881 (May 5, 1977). The rule as restated explicitly provides that the exception to the "equal application" rule extends only to a price variation (within the three-cent-per-gallon maximum) in sales to classes of purchaser at refiner-operated service stations compared with sales to all other classes of purchaser, and does not extend to any price variations between refiner-operated service stations. Compare § 212.83(h)(2)(iv)(A) with § 212.83(h)(2)-(iv)(B).

In addition, FEA undertook a rulemaking proceeding whose objective was to permit, under changed circumstances of ample supply, a degree of "regional pricing flexibility"—i.e., a measure of relief from pre-existing rules that generally required a refiner to charge the same price to the members of a class of purchaser nationwide and that penalized any unequal pass-through of increased costs as between classes of purchaser.[4] Nothing in the notices of proposed rulemaking in this matter, 39 FR 32718 (September 10, 1974), 40 FR 49372 (October 22, 1975), suggested that the regulations by that time already permitted refiners to vary prices between one refiner-operated outlet and another, without regard to the "equal application" rule, to reflect "local market conditions" or for any other reason. Moreover, the final rulemaking notice in this matter reviewed at some length the question whether "regions" should be defined for this purpose in terms of PAD Districts, FEA Regions, States, standard metropolitan statistical areas, counties, or the historic marketing areas or zones of each refiner. The latter alternative was rejected as administratively infeasible due to the excessive flexibility or indefiniteness of the "marketing area" concept. 41 FR 30021 (July 21, 1976). This rulemaking proceeding thus confirms not only that FEA did not view its pre-existing regulations as authorizing price variations from outlet to outlet but also

[1] The "retail price equalization" rule, currently found in § 212.83(h)(2)(iv), reads as follows: "*Retail sales of gasoline by refiners.* When a refiner calculates the amount of increased costs not recouped that may be added to May 15, 1973, selling prices of gasoline to compute maximum allowable prices in a subsequent month, it may, notwithstanding the general rule in [subparagraph (1) above], compute revenues as though (A) the greatest amount of increased costs actually added to any May 15, 1973, selling price of gasoline and included in the price charged to any class of purchaser that purchases gasoline at retail from a refiner at any service station operated by employees of the refiner had been added to the May 15, 1973, selling prices of that product and included in the price charged to each class of purchaser that purchases gasoline at retail from a refiner at any service station operated by employees of the refiner and, (B) the greatest amount of increased costs actually added to the May 15, 1973, selling price of gasoline and included in the price charged to any class of purchaser that purchases gasoline at retail from a refiner at any service station operated by employees of the refiner had been added, in the same amount (less any actual differential or three cents per gallon, whichever is less) to the May 15, 1973, selling prices of gasoline and included in the price charged to all other classes of purchaser."

[2] § 212.83(h)(2)(i) permits refiners to vary by as much as three cents per gallon the pass-through of cost increases to purchasers of gasoline on one PAD District as compared with purchasers in another PAD District, without penalty under the "equal application" rule. The division of the United States into five PAD Districts is discussed at 41 FR 30021 (July 21, 1976).

[3] Nothing in this Interpretation should be construed as prohibiting price variations between refiner-operated service stations based on valid class of purchaser distinctions or different grades or types of gasoline. The focus of the discussion is the authority of refiners to make price adjustments to reflect changing local or regional market conditions without penalty under the "equal application" rule.

[4] The "equal application" rule, currently found in § 212.83(h), had its origins in the Cost of Living Council's Phase IV petroleum price regulations (see, e.g., 6 CFR 150.356(g), 150.357(e), 38 FR 22536 (August 22, 1973)); see also 6 CFR 150.355(d)(2) (i)(b) and (ii)(b), 150.356(c)(i)(ii), and the definition of "d_s" following 150.356(c)(2)(ii), as in effect in December 1973). These requirements were carried over in parallel provisions at the beginning of the FEO/FEA program at 39 FR 1924 (January 15, 1974), viz: 10 CFR 212.82(c)(2)(i)(b) (nonproduct costs increases applicable to special products), § 212.82(c)(2)(ii)(b) (nonproduct cost increases applicable to products other than special products), § 212.83(c)(1)(ii) (product cost increases applicable to products other than special products), and the definition of "d_s" following § 212.83(c)(2)(ii) (product cost increases applicable to gasoline and other special products). See also 39 FR 32056 (September 5, 1974) and *Phillips Petroleum Co.*, Interpretation 1975-5, 42 FR 23727 (May 10, 1977), *aff'd* 2 FEA ¶80,599 (May 30, 1975).

that FEA was unwilling to go nearly that far when it considered and ultimately adopted a pricing flexibility rule for refiners restricted to price variations between broad regional areas only.

In support of its view that the "retail price equalization" rule was intended to compensate for price disparities or dislocations from market to market as well as between independent retailers and company-operated outlets, Mobile asserts that there were varying increases in non-product costs between independent dealers at the time the "retail price equalization" rule was first promulgated effective April 1, 1974. It is clear, however, that the rule was based on the prevalence or generality of a full three-cent-per-gallon price increase to reflect non-product cost increases, among independent dealers, rather than on any concern for such variations within the three-cent-per-gallon limit as might be found. After referring to the then-recent regulation amendment "to permit price increases with respect to the retail sale of gasoline totalling $0.03 per gallon, in order to reflect increased non-product costs," the rulemaking notice states that "most resellers have implemented this increases." 39 FR 12013 (April 2, 1974).[5] The notice then explains why refiners have not passed through this increase in sales at refiner-operated retail outlets, and goes on to discuss the "retail price equalization" rule solely in terms of the need for a corrective adjustment with respect to prices charged at refiner-operated outlets, on the one hand, compared with prices charged to independent dealers, on the others.

INTERPRETATION 1978-54

To: Atlantic Richfield Co.
Date: August 24, 1978.
Rules Interpreted: 10 CFR 211.67(d)(2), EPAA section 3(5).
Code: GCW—AI-Covered Products, Export Sales Deduction.

FACTS

The Atlantic Richfield Co. (ARCO) is a refiner subject to the provisions of the Mandatory Petroleum Allocation and Price Regulations. ARCO manufacturers and sells a carbon black feedstock oil, under the trade name, "Petro base 100," that is used in the manufacture of carbon black.

"Petro base 100" is an aromatic petroleum product that has a sulfur content of 2 to 3 percent and a typical API gravity of −1 (with a specified maximum of 2). It has a pour point of between 50° and 60° F, an average boiling point of 600° F, and a 90 percent boiling point at or above 671° F. It cracks (decomposes) before reaching temperatures of over 700° F.

ISSUE

Are exports of ARCO's "Petro base 100" carbon black feedstock oil excluded from the export sales deduction requirement of § 211.67(d)(2)?

INTERPRETATION

ARCO's "Petro base 100" carbon black feedstock oil is a refined petroleum product covered by the provisions of the Emergency Petroleum Allocation Act of 1973, *as amended* (EPAA), Pub. L. No. 93-159 (November 27, 1973)[1] and the Mandatory Petroleum Allocation and Price Regulations. Thus, exports of ARCO's carbon black feedstock oil[2] must be deducted from ARCO's calculations of crude oil runs to stills in any month under 10 CFR 211.67(d)(2).

The carbon black feedstock oil manufactured by ARCO is exported in accordance with the licensing controls imposed by the United States Department of Commerce regulations on petroleum and petroleum products set forth in 15 CFR 377.6. These export sales are also subject to the provisions of 10 CFR 211.67(d)(2), which require refiners such as ARCO to reduce their calculations of crude oil runs to stills by the volume of their export sales of "refined petroleum products" and "residual fuel oil," subject to certain exemptions. That section specifically provides:

"[t]he *volume of a refiner's crude oil runs to stills in a particular month* for purposes of the calculations in paragraph (a)(1) of this section and the calculations for the national domestic crude oil supply ratio *shall be reduced by that refiner's volume of export sales under § 212.53* of Part 212 of this chapter [which, in subsection (a), exempts the export sales of all petroleum products otherwise subject to price controls from the price regulations of Part 212] in that month *of refined petroleum products* (including aviation fuels as defined in § 211.142 of this part, but excluding refined lubricating oils) and *residual fuel oil*, including sales to a domestic purchaser which certifies the product is for export [emphasis added]; *provided*, however, that the volume of a refiner's crude oil runs to stills for a month shall not be reduced by that refiner's volume of export sales of Bunker C and Navy Special fuel oils and No. 4 diesel, which are sold for use as a marine fuel on a voyage departing from a United States port."

The terms, "refined petroleum products" and "residual fuel oil," as used in § 211.67(d)(2), parallel the use of those terms in the EPAA. If "Petro base 100" carbon black feedstock oil is either a residual fuel oil or refined petroleum product as set forth in the EPAA and the Mandatory Petroleum Allocation Regulations, ARCO must reduce its volume of crude oil runs to stills by the volume of its export sales of this carbon black feedstock product.

"Petro base 100" is the product of a long series of refining processes which begin with the residue from the initial distillation. This material is placed in a coking unit that produces a distilled product (the overhead), which is then used as the feedstock for a fluid catalytic cracking unit. The residue from the catalytic cracking unit is then passed through a thermal unit. The "Petro base 100" carbon black feedstock oil exported by ARCO is composed of residue from the thermal unit.[3]

"Petro base 100" clearly is not eligible for the exemptions under § 211.76(d)(2) for "refined lubricating oil," or as a product "sold for use as a marine fuel" on voyages departing from United States ports. However, it must be determined whether "Petro base 100" qualifies as a residual fuel oil[4] or a refined petroleum product in order to determine whether this carbon black feedstock oil is a petroleum product that must be deducted from ARCO's calculations of crude oil runs to stills under § 211.67(d)(2).

It is clear that "Petro base 100" is not a residual fuel oil. Although not defined in the EPAA, residual fuel oil is defined in § 211.51 as "the fuel oil commonly known as: (a) No. 4, No. 5 and No. 6 fuel oils; (b) Bunker C; (c) Navy Special Fuel Oil; and all other fuel oils which have a 50 percent boiling point over 700° F in the ASTM D-86 standard distillation test." "Petro base 100" does not fit this definition. ARCO's carbon black feedstock oil has an average boiling point of 600° F and cracks before reaching temperatures of over 700° F. Consequently, it cannot be classified as "residual fuel oil."

However, the "Petro base 100" carbon black feedstock oil is a gas oil, which is a "refined petroleum product" under the EPAA.[5] The term "refined petroleum products" is defined in section 3(5) of the EPAA and includes "gasoline, kerosene, *distillates* (including Number 2 fuel oil), LPG, refined lubricating oils or diesel fuel." (Emphasis added.) "Gas oils" are petroleum refinery products that have generally been considered petroleum "distillates" for purposes of the Mandatory Petroleum Allocation Regulations.[6] Gas oils may be produced by the initial distillation of crude oil or by subsequent cracking, distillation, or coking processes. They are broadly defined in § 211.182 as "petroleum fractions made up predominantly of material which boils at or above 430° F., *including heavy aromatic gas oil used as carbon black feedstock*, but excluding process oils and refined lubricating oils" (which are regulated under Subpart K of

[5]See also Ruling 1975-14, 40 FR 40833 (September 4, 1975), which states that the maximum nonproduct cost increments in § 212.93(b) are, for the most part, "generally * * * representative of the relevant overall non-product cost increases that have been experienced in the industry."

[1]15 U.S.C. § 751 et seq. (1976).

[2]Carbon black, as distinguished from the feedstock used for its production, is a petrochemical that is not a regulated product. *Intenco, Inc. and Houston Carbon Company Ltd.* (Intenco) Interpretation 1978-28, 43 FR 25086 (June 9, 1978).

[3]A typical result of this final thermal cracking process is black fuel oil or coke. W. L. Nelson, *Petroleum Refinery Engineering* 219 (4th ed. 1969). In ARCO's process, however, a heavy liquid aromatic petroleum product is produced to be used as a feedstock for the "Furnace" process of carbon black manufacture. *Id.* at 830-831.

[4]Although residual fuel oil was exempted from the provisions of Parts 211 and 212, 41 FR 13896 (April 1, 1976), exports must still be deducted from refiners' crude oil runs to stills under § 211.67(d)(2).

[5]The scope of the term refined petroleum product as used in § 211.67(d)(2) was discussed in *Shell Oil Company*, (*Shell*) Interpretation 1978-42, 43 FR 29551 (July 10, 1978). In *Shell* the DOE held that "the term 'refined petroleum product' in § 211.67(d)(2) is intended to be coextensive with the definition of 'refined petroleum product' in sec. 3(5)" of the EPAA.

[6]The allocation of gas oils was set forth in 10 CFR Part 211, Subpart J until September 1, 1976. Effective September 1, 1976, subsection (b)(6), which is the current subsection (b)(7), was added to § 211.1. 41 FR 30096 (July 22, 1976). Section (b)(7) provides: "Notwithstanding the provisions of Subpart J of this part, naphthas and *gas oils are excluded from this part* except with respect to the use of naphtha for synthetic natural gas plant feedstock pursuant to §§ 211.183 and 211.29." [Emphasis added.]

Export sales of gas oils must still be deducted from refiners' crude oil runs to stills, however, under § 211.67(d)(2).

Part 211). (Emphasis added.) As noted above, the definition of gas oils includes carbon black feedstock oils. Since "Petro base 100" carbon black feedstock oil has an average boiling point of 600° F, it is clearly a gas oil [7] and thus a refined petroleum product for the purposes of the Mandatory Petroleum Allocation Regulations.[8]

Accordingly, ARCO must reduce its calculations of crude oil runs to stills in any month by its exports of "Petro base 100" carbon black feedstock oil, pursuant to § 211.67(d)(2).[9]

INTERPRETATION 1978-55

To: Hawaiian Independent Refinery, Inc.
Date: August 25, 1978.
Rules interpreted: 10 CFR 211.67(d)(2); 212.53(a).
Code: GCW—AI—Export sales deduction.

FACTS

Hawaiian Independent Refinery, Inc. (HIRI) is an "independent refiner," as defined in 10 CFR 211.51, which is located on the Island of Oahu, State of Hawaii. HIRI is solely dependent upon foreign crude oil in the operation of its refinery. HIRI has contracted with Firm X to supply it with

The contract between HIRI and Firm X provides, in part, that if Firm X notifies HIRI that it is unable to take delivery of a given shipment , HIRI may sell that amount to a third party. The contract further provides that in such an event HIRI shall charge Firm X for the difference between the Firm X contract price and the price paid to HIRI by the third party as well as for certain additional charges for transportation of the .

The contract provision described above was invoked with the consent of Firm X when it notified HIRI that it would be unable to take delivery of shipment due in February 1978 because of a surplus of in its inventory. In response, HIRI arranged a barrel for barrel exchange of a similar quality of with a foreign customer. HIRI delivered the to its foreign exchange partner abroad and received a slightly lesser amount in New York, N.Y. in two shipments. The exchange and subsequent sale on the East Coast were devised to limit the costs to Firm X occasioned by its inability to accept the February 1978 delivery. In addition, HIRI and Firm X also agreed that the value of entitlement benefits earned by HIRI on the runs to stills of the exchanged if any, would be used to further reduce Firm X's costs. HIRI paid a differential on the barrels that it received in New York based on four distinguishing features of the shipments: (1) higher transportation costs; (2) higher quality product; (3) foreign buyer's payment of product insurance costs; and (4) better market conditions on the East Coast.

ISSUES

Whether the exchange of constituted an export sale under 10 CFR 212.53(a) which requires the refiner to deduct the volume of exchanged from its crude oil runs to stills pursuant to the export sales deduction requirement set forth in 10 CFR 211.67(d)(2)?

INTERPRETATION

For the reasons set forth below, it has been concluded that the volume of exchanged by HIRI would not be an export sale under 10 CFR 212.53(a). Therefore, that volume of is not required to be deducted from HIRI's crude oil runs to stills under § 211.67(d)(2). However, HIRI would be required to deduct from its crude oil runs to stills the amount by which its shipment to its foreign customer exceeded the amount received in exchange. Further, there are no regulatory reasons for restricting HIRI's private contractual right to pass on the monetary value of the entitlements benefits accrued to HIRI's regular customer, Firm X.

10 CFR 211.67(d)(2) provides, in pertinent part, that: "The volume of a refiner's crude oil runs to stills in a particular month for purposes of the calculations in paragraph (a)(1) of this section [issuance of entitlements] and the calculations for the national domestic crude oil supply ratio shall be reduced by that refiner's volume of export sales under § 212.53 of Part 212 of this chapter in that month of refined petroleum products . . . and residual fuel oil, including sales to a domestic purchaser which certifies the product is for export . . . ."

10 CFR 212.53(a) exempts "export sales" from the Department of Energy's (DOE) price regulations but does not define the term "export sales."

The concept of export sales was discussed in *Mobil Oil Corporation*, Interpretation 1977-16, 42 FR 31151 (June 20, 1977). In *Mobil* the Federal Energy Administration (FEA, a predecessor agency of the Department of Energy) pointed out that export sales under 10 CFR 212.53(a) are those which produce revenues from foreign sources. The *Mobil* Interpretation also noted that the export sales exemption was adopted to allow export sales to be made at the highest possible prices. Thus, for the quantity of matched by the foreign customer in the exchange, HIRI will have received no sales revenue from a foreign source.

An analogous exchange arrangement was discussed in *Guam Oil and Refining Company (GORCO)*, Interpretation 1977-36, 42 FR 54270 (Oct. 5, 1977), where it was determined that a proposed time exchange of residual fuel oil between Guam and a foreign destination would not require an adjustment under the export sales deduction of § 211.67(d)(2) as long as the exchange was equal.

In *GORCO* the FEA stated that: "[T]he policy underlying the loss of entitlements for export sales under 10 CFR 211.67(d)(2), does not apply in this case. That statement of policy, set forth in the preamble to the amendments to that section issued on March 29, 1976 (41 FR 13899, April 1, 1976), notes that the entitlements program was established to equalize among all segments of the petroleum industry the benefits of access to lower priced domestic crude oil whose ceiling price is low in comparison to uncontrolled domestic or imported crude oil. Thus, the export deduction provision of the entitlements program is designed first to ensure that cost equalization benefits are not granted to the extent that a firm exports refined petroleum products or residual fuel oil and sells these products in the world market at uncontrolled prices and further to preserve the advantages of these costs benefits for domestic purchasers of petroleum products (*id.* at 13992). Allowing exported refinery products to earn entitlements would, in effect, constitute a subsidy to foreign oil consumers.

"Since GORCO does not propose any net export of residual fuel oil in this case, the cost equalization benefits of any and all entitlements it receives will be retained in the domestic economy. Therefore, no export sales deduction is required. However, if a net export of a small volume of such oil results from the failure of Firm X to deliver in exchange to GORCO as much residual fuel oil as GORCO delivers to Firm X, GORCO will be required to make a retroactive adjustment to its Form P-102-M-1 and reduce its crude oil runs to stills under the entitlements program by the net volume of residual fuel oil exported pursuant to the agreement."

See also Tesoro Petroleum Corp., Interpretation 1978-10, 43 FR 15621 (Apr. 14, 1978).

Similarly, HIRI is not selling the * * * which it exchanged with its foreign customer on the uncontrolled world market, but rather selling it domestically in New York. Thus, no export sale as contemplated by § 212.53(a) has occurred for purposes of § 211.67(d)(2), as long as the exchange between HIRI and its foreign customer was equal. Consequently, HIRI may earn entitlements for the crude oil runs to stills attributable to the volume of exchanged * * * HIRI's ability to retain the entitlement benefits is not affected by its decision to transfer the value of these entitlement benefits to Firm X.

Furthermore, it is important to stress two factors present in the *GORCO* and *Tesoro* interpretations which permitted entitlement benefits to be earned on the exchanged volumes. First, both exchanges were *one-time* exchanges. The firms in each instance did not seek, nor did they receive, Departmental approval for continuing exchange transactions between the parties. Second, the volumes received into this country were *incremental* volumes which would not have been imported in the normal course of business. Thus, it was concluded that the exchanges were not simply the matching of exported volumes with volumes which would have been imported by those firms under normal circumstances. The mere matching of export volumes with volumes which were already intended for import by a given firm would be construed as an attempt to circumvent the objectives of the entitlements program and would not qualify for entitlement benefits. The facts presented by HIRI permit the Department to conclude that this case is similar to *GORCO* and *Tesoro* in both respects.

INTERPRETATION 1978-56

To: Mack C. Colt, Inc.
Date: August 25, 1978.
Rule interpreted: 10 CFR 210.62(a).
Code: GCW—AI—Normal business practices, supplier/purchaser relationship.

FACTS

Mack C. Colt, Inc. (Colt), is a crude oil producer which has been selling stripper well crude oil under 10 CFR 212.54 to General Energy Co., Inc. (GEC). GEC wholly owns the Mid-America Refinery Co. (Mid-America), a small refiner as defined in 10

[7] *See Petroleum Products Handbook* 1-12 (V. B. Guthrie ed. 1960).

[8] *See also Mobil Oil Corp.* v. *Federal Energy Administration*, 566 F. 2d 87, *aff'g.* 435 F. Supp. 983 (N. D. Tex. 1977).

[9] *See also Shell, supra.*

CFR 211.51. Colt began selling crude oil to GEC under a division order (contract) which took effect on March 1, 1977, initiating a supplier/purchaser relationship between Colt and GEC under the provisions of 10 CFR 211.63(b)(2). The division order provided that payments of amounts due on account for crude oil which had been delivered during the preceding calendar month, should be made in full in the following month. Accordingly, on March 15, 1977, GEC agreed to pay for all crude oil purchases on the 20th day of the month following the month of purchase. Until February of 1978, GEC substantially complied with this practice. No other payment terms were included in the division order.

GEC's check in payment for crude oil delivered in February 1978 was not covered by sufficient funds. Consequently, payment for crude oil delivered in February was not made until April 20, 1978, one month later than the date payment was due. In addition, Colt was not paid for crude oil sold in March until May 12, 1978, 22 days after the date payment was due. Because of the alteration of payment terms imposed by GEC, the financial losses resulting therefrom, and the apparent additional financial risk of delivering more crude oil to GEC, on May 17, 1978, Colt began selling its entire crude oil production to another purchaser.

ISSUE

Do the provisions of 10 CFR 210.62 permit the unilateral termination of a crude oil supplier/purchaser relationship by the supplier if the purchaser substantially alters the normal payment practices in effect during the base period for the supplier/purchaser relationship by failing to pay for crude oil deliveries in a timely manner?

INTERPRETATION

It has been concluded that pursuant to 10 CFR 210.62(a) a crude oil producer (supplier) may terminate its supplier/purchaser relationship with a particular purchaser if the purchaser substantially alters the customary credit or payment terms in effect during the base period by failing to pay for prior crude oil deliveries in a timely manner. Permanent terminations of crude oil supplier/purchaser relationships may also be accomplished pursuant to 10 CFR 211.63(d).

Section 211.63(b) of 10 CFR provides for the establishment of crude oil supplier/purchaser relationships as part of the national program of mandatory petroleum allocation required by section 4 of the Emergency Petroleum Allocation Act of 1973, *as amended*, Pub. L. 93-159 (Nov. 27, 1973).[1] This regulation requires the maintenance for the duration of the crude oil allocation program of all supplier/purchaser relationships under contracts for sales, purchases and exchanges of domestic crude oil which were in effect on January 1, 1976, or are established thereafter.

Section 211.63(d) sets forth certain circumstances under which a supplier of crude oil may terminate its supplier/purchaser relationship with its purchaser. A crude oil supplier/purchaser relationship may be terminated at the option of the purchaser (§ 211.63(d)(1)(i)). In addition, a producer of crude oil from a stripper well lease may terminate its existing crude oil supplier/purchaser relationship as long as the crude oil is then sold to any small refiner (§ 211.63(d)(1)(ii)). If the present purchaser refuses within 15 days to meet a bona fide written offer of a higher lawful price, a crude oil producer may terminate the supplier/purchaser relationship with that purchaser and initiate a new relationship with the offeror (§ 211.63(d)(1)(iii)). Crude oil producers may also terminate a supplier/purchaser relationship with a purchasing crude oil reseller subject to the conditions set forth in § 211.63(d)(1)(iv).

However, § 211.63(d) does not provide the sole means for terminating a crude oil supplier/purchaser relationship, since, pursuant to 10 CFR 210.62(a) a supplier of allocated products need not supply such products to a purchaser who fails to arrange for proper credit or payment for the products.[2] Section 210.62(a) provides the authority for a supplier to terminate a crude oil supplier/purchaser relationship based upon a substantial alteration of customary credit or payment terms by the purchaser to the disadvantage of the supplier.

Section 210.62(a) requires suppliers to deal with purchasers of allocated products "according to normal business practices in effect during the base period specified in Part 211 for that allocated product." The section further provides however, that "[n]othing in this paragraph shall be construed to require suppliers to sell to purchasers who do not arrange proper credit or payments for allocated products as customarily associated with that class of purchaser * * * on May 15, 1973."[3] The term "base period," as used in § 210.62(a) in reference to crude oil supplier/purchaser relationships, means "the historical period designated in Subparts C through K" of 10 CFR Part 211 as defined in § 211.51. The base period date set forth in Subpart C of Part 211 (which provides for the mandatory allocation of crude oil produced in or imported into the United States) is January 1, 1976, under § 211.63(b)(1), or the date of any first sale of crude oil thereafter, under the provisions of § 211.63(b)(2).

The provisions of § 210.62(a) therefore grant to suppliers the right to terminate sales to purchasers who do not arrange proper credit or payment terms customarily associated with sale of that product to that purchaser. Although § 210.62(a) has been interpreted to permit mutual modifications of the private contractual agreements of suppliers and purchasers that were in effect during the base period for that supplier/purchaser relationship,[4] it does not permit a purchaser to unilaterally change the customary credit or payment terms to the disadvantage of the supplier.

A supplier may terminate its § 211.63 supplier/purchaser relationship, therefore, pursuant to § 210.62(a) where a purchaser unilaterally and substantially breaches the customary payment practices. However, what constitutes a "substantial" deviation from a proper payment practice is a subjective judgment which must be made on a case by case basis. For example, if the customary practice had been for the purchaser to pay for crude oil no later than a certain date each month, any substantial and unilateral delay in payment by the purchaser over a period of months could be sufficient justification for a supplier to terminate the supplier/purchaser relationship. Such conduct on the part of the purchaser would show either an inability or unwillingness to continue to meet the customary payment terms and could be a sufficient basis for a crude oil supplier to terminate its supply relationship with a purchaser.

In this case, Colt may permanently terminate its supplier/purchaser relationship with GEC under the provisions of § 210.62(a) since GEC unilaterally delayed its payments for crude oil approximately one month beyond the date payment was due in two consecutive months. As a result, Colt was free to sell its crude oil production to another purchaser following the second late payment to avoid further financial loss. Since GEC unilaterally and substantially breached the customary payment practices in effect with Colt, we conclude that Colt's termination of its supplier/purchaser relationship with GEC was proper under § 210.62(a). It should be noted, however, that suppliers should seek an interpretation pursuant to 10 CFR Part 205, Subpart F, prior to terminating a crude oil supplier/purchaser relationship under § 210.62(a) except in cases where a purchaser makes an outright refusal to pay for crude oil.

[FR Doc. 78-25263 Filed 9-8-78; 8:45 am]

[1] 15 U.S.C. 751 et seq. (1976).

[2] *See Hamilton Bros. Oil Co.*, Interpretation 1974-3, 42 FR 25649 (May 18, 1977), issued Apr. 19, 1974. *See also Navajo Refining Co.*, Interpretation 1977-26, 42 FR 41099 (Aug. 15, 1977).

[3] The May 15, 1973, date used in § 210.62(a) as applied to crude oil supplier/purchaser relationships refers to the highest posted price for a particular grade of crude oil in a particular field. If, as in the present case, the producer made no sales of crude oil to a purchaser until nearly 3 years subsequent to that date, the May 15, 1973, date must be considered to be the first date upon which a sale of crude oil is made at the maximum lawful price to the particular purchaser. On the date Colt first sold crude oil to GEC a base period credit arrangement under § 210.62(a) was established as well as a crude oil supplier/purchaser relationship pursuant to § 211.63(b).

[4] *Pasco Petroleum Co., Inc.* Interpretation 1978-38, 43 FR 29544 (July 10, 1978).

[6210-01]

Title 12—Banks and Banking

CHAPTER II—FEDERAL RESERVE SYSTEM

SUBCHAPTER A—BOARD OF GOVERNORS OF THE FEDERAL RESERVE SYSTEM

[Reg. Z; FC-0151]

PART 226—TRUTH IN LENDING

Official Staff Interpretation; Suspension of Effective Date and Republication for Public Comment

AGENCY: Board of Governors of the Federal Reserve System.

ACTION: Effective date of official staff interpretation suspended; its text reprinted for public comment.

SUMMARY: The Board is suspending the effective date of official staff interpretation FC-0151, regarding the disclosures required in connection with certain interim student credit

transactions, published on July 28, 1978 (43 FR 32742) and is republishing it for public comment. The agency is taking this action in response to a request for public comment submitted in accordance with 12 CFR 226.1(d)(3).

DATES: The effective date of FC-0151 is suspended until further notice. Comments must be received on or before October 11, 1978.

ADDRESS: Comments including reference to FC-0151 to Secretary, Board of Governors of the Federal Reserve System, Washington, D.C. 20551.

FOR FURTHER INFORMATION CONTACT:

Glenn E. Loney, Section Chief, Division of Consumer Affairs, Board of Governors of the Federal Reserve System, Washington, D.C. 20551, 202-452-3867.

SUPPLEMENTARY INFORMATION: (1) The effective date, August 28, 1978, of official staff interpretation FC-0151, is suspended in accordance with 12 CFR 226.1(d)(2)(ii). This interpretation may not be relied upon until final action is taken. Notice of such action will be published in the FEDERAL REGISTER in approximately 60 days and will become effective upon publication.

(2) The text of official staff interpretation FC-0151, which follows, is republished for comment. Identifying details have been deleted to the extent required to prevent a clearly unwarranted invasion of personal privacy. The Board maintains and makes available for public inspection and copying a current index providing identifying information for the public subject to certain limitations stated in 12 CFR 261.6.

(3) Interested persons are invited to submit relevant comments. All materials should be submitted in writing to: Secretary, Board of Governors of the Federal Reserve System, Washington, D.C. 20551, and should be received not later than October 11, 1978. Comments will be made available for inspection and copying upon request, except as provided in § 261.6(a) of the Board's rules regarding availability of information (12 CFR 261.6(a)).

(4) After comments are considered, this official staff interpretation may be amended, may be rescinded or may remain unchanged. Final action regarding this official staff interpretation will appear in the FEDERAL REGISTER.

(5) Authority: 15 U.S.C. 1640(f).

§ 226.8(b) Under federally insured program providing credit to students for educational purposes, if student has option of receiving funds directly which may be used as the student sees fit, loan disclosures are appropriate.

§ 226.8(d) Under federally insured program providing credit to students for educational purposes, if student has option of receiving funds directly which may be used as the student sees fit, loan disclosures are appropriate.

JULY 3, 1978.

This is in response to your letter of ——, in which you request an official staff interpretation of regulation Z regarding the truth in lending disclosures which must be made in connection with certain interim student credit transactions made pursuant to a federally insured program. The staff believes that the primary issue which you raise is appropriate for an official response. Other questions asked in your letter will be addressed in a separate, unofficial staff interpretation of the regulation.

The program with which you are concerned consists of a fund from which extensions of credit are made by participating colleges and universities to students who meet the financial need criteria established by the Higher Education Act of 1965. Use of funds received under the program is restricted to expenses related to attendance at the institution which advances the funds, and the student must sign an affidavit affirming that the funds will be used only for such expenses.

Under the program, funds may be disbursed directly to the student or a credit may be made to the student's account at the educational institution. You are concerned that if a credit is made to a student's account with the institution and the student simply receives goods and services (e.g., tuition, room, board, books) from the institution, the transaction could be viewed as a credit sale rather than a loan, and credit sale disclosures rather than loan disclosures would be required under Regulation Z.

In the staff's opinion the answer to whether loan or credit sale disclosures are required in connection with the program you describe is dependent upon the ability of students participating in the program to obtain funds (e.g., cash or a check) from the institution if they so desire. As long as a student has the option of receiving funds directly which may be used as the student sees fit, the staff believes that the applicable loan disclosures under §§ 226.8 (b) and (d) of Regulation Z would be appropriate. Furthermore, even though use of the loan proceeds is restricted to expenses related to attendance or continued attendance at the institution which makes the loan, as long as use of the funds is not restricted to the purchase of *particular* goods or services *from the institution* the staff feels that loan disclosures would be proper.

This is an official staff interpretation of Regulation Z, issued pursuant to § 226.1(d)(2) of the regulation. It will become effective 30 days after publication in the FEDERAL REGISTER unless a request for public comment, made in accordance with the Board's procedures, is received and granted. We will notify you if the effective date of the interpretation is suspended because such a request is received.

We also note that your client may be subject to the laws and regulations of the State of Maine which has been granted an exemption from the applicable provisions of regulation Z. Therefore, you may wish to contact Mr. Harry Giddinge, Acting Superintendent, Bureau of Consumer Protection, Department of Business Regulation, State House, Augusta, Maine 04330, for his views on the issue addressed in this letter.

Sincerely,

NATHANIEL E. BUTLER,
Associate Director.

Board of Governors of the Federal Reserve System, September 5, 1978.

GRIFFITH L. GARWOOD,
Deputy Secretary of the Board.

[FR Doc. 78-25429 Filed 9-8-78; 8:45 am]

[4910-13]

Title 14—Aeronautics and Space

CHAPTER I—FEDERAL AVIATION ADMINISTRATION, DEPARTMENT OF TRANSPORTATION

[Airspace Docket No. 78-CE-11]

PART 71—DESIGNATION OF FEDERAL AIRWAYS, AREA LOW POINT ROUTES, CONTROLLED AIRSPACE, AND REPORTING POINTS

Alteration of Transition Area—Goodland, Kans.

AGENCY: Federal Aviation Administration (FAA), DOT.

ACTION: Final rule.

SUMMARY: The nature of this Federal action is to alter the 700-foot transition area at Goodland, Kans., to provide additional controlled airspace for aircraft executing a new instrument approach procedure to Renner Field, Goodland Municipal Airport, Goodland, Kans., based on a localizer installed on the airport and an existing VOR.

EFFECTIVE DATE: November 2, 1978.

FOR FURTHER INFORMATION CONTACT:

Gary W. Tucker, Airspace Specialist, Operations, Procedures and Airspace Branch, Air Traffic Division, ACE-538, FAA, Central Region, 601 East 12th Street, Kansas City, Mo. 64106, telephone 816-374-3408.

SUPPLEMENTARY INFORMATION: A new instrument approach procedure to Renner Field, Goodland, Kans., Municipal Airport has been established utilizing a localizer installed on the airport and an existing VOR as navigational aids. The establishment of a new instrument approach procedure based on the navigational aids entails the alteration of the transition area at Goodland, Kans., at and above 700 feet above the ground (AGL) within which aircraft are provided additional air traffic control service. The intended effect of this action is to insure additional adequate controlled airspace for aircraft executing this new instrument approach procedure.

DISCUSSION OF COMMENTS

On pages 26755 and 26756 of the FEDERAL REGISTER dated June 22, 1978, the Federal Aviation Administration published a notice of proposed rulemaking which would amend § 71.181 of Part 71 of the Federal Aviation Regulations so as to alter the transition area at Goodland, Kans. Interested persons were invited to participate in this rulemaking proceeding by submitting written comments on the proposal to the FAA. No objections were received as a result of the notice of proposed rulemaking.

Accordingly, Subpart G, § 71.181 of the Federal Aviation Regulations (14 CFR 71.181) as republished on January 3, 1978 (43 FR 440), is amended effective 0901 G.m.t., November 2, 1978, by altering the following transition area:

GOODLAND, KANS.

That airspace extending upward from 700 feet above the surface within a 7-mile radius of Renner Field, Goodland Municipal Airport (latitude 39°22'10" N, longitude 101°41'55" W); within 5 miles each side of the Goodland VORTAC 163° radial, extending from the 7-mile radius area to 12 miles south of the VORTAC; within 3.5 miles each side of the Goodland localizer course extending from the 7-mile radius area to 8 miles southeast of the airport.

(Sec. 307(a), Federal Aviation Act of 1958 as amended (49 U.S.C. 1348); sec. 6(c), Department of Transportation Act (49 U.S.C. 1655(c)); Sec. 11.61 of the Federal Aviation Regulations (14 CFR 11.61).)

NOTE.—The FAA has determined that this document involves a proposed regulation which is not considered to be significant under the procedures and criteria prescribed by Executive Order 12044 and as implemented by interim Department of Transportation guidelines (43 FR 9582; March 8, 1978).

Issued in Kansas City, Mo., on August 29, 1978.

JOHN E. SHAW,
Acting Director, Central Region.

[FR Doc. 78-25436 Filed 9-8-78; 8:45 am]

[4910-13]

[Airspace Docket No. 78-WA-8]

PART 71—DESIGNATION OF FEDERAL AIRWAYS, AREA LOW ROUTES, CONTROLLED AIRSPACE, AND REPORTING POINTS

Designation of VOR Federal Airway

AGENCY: Federal Aviation Administration (FAA), DOT.

ACTION: Final rule.

SUMMARY: This amendment designates alternate airway V-112 south between Portland, Oreg., and The Dalles, Oreg. This action provides controlled airspace and chartered radials in an area where radar coverage at low altitudes is not adequate within established criteria.

EFFECTIVE DATE: November 2, 1978.

FOR FURTHER INFORMATION CONTACT:

Mr. Lewis W. Still, Airspace Regulations Branch (AAT-230), Airspace and Air Traffic Rules Division, Air Traffic Service, Federal Aviation Administration, 800 Independence Avenue SW., Washington, D.C. 20591, telephone 202-426-8525.

SUPPLEMENTARY INFORMATION:

HISTORY

On July 27, 1978, the FAA proposed to amend Part 71 of the Federal Aviation Regulations (14 CFR Part 71) to designate V-112 south alternate airway from Portland, Oreg., via Portland 110°T (089°M) and The Dalles, Oreg., 255°T (234°M) radials to The Dalles (43 FR 32436). Interested persons were invited to participate in the rulemaking proceeding by submitting comments on the proposal to the FAA. The two comments received expressed no objection to the proposal. This amendment is the same as that proposed in the notice except the Portland 090°M is corrected to 089°M radial and The Dalles 235°M is corrected to 234°M radial. Section 71.123 was republished in the FEDERAL REGISTER on January 3, 1978 (43 FR 307).

THE RULE

This amendment to Part 71 of the Federal Aviation Regulations (14 CFR Part 71) designates V-112 south alternate airway between Portland, Oreg., and The Dalles, Oreg. Presently, aircraft proceeding between these two terminals utilize V-112 thereby creating congested traffic situations and IFR delays. The designation of V-112 south alternate airway permits air traffic control flexibility thereby improving traffic flow between Portland and The Dalles.

ADOPTION OF THE AMENDMENT

Accordingly, pursuant to the authority delegated to me by the Administrator, §71.123 of Part 71 of the Federal Aviation Regulations (14 CFR Part 71) as republished (43 FR 307) is amended, effective 0901 G.m.t., November 2, 1978, as follows:

Under V-112, "Portland, Oreg.; The Dalles, Oreg.; INT of The Dalles 101° and Pendleton, Oreg., 254° radials; Pendleton;" is deleted and "Portland, Oreg.; The Dalles, Oreg.; including a S alternate from Portland via the Portland 110° and the Dalles 255° radials to The Dalles; INT of The Dalles 101° and Pendleton, Oreg.; 254° radials; Pendleton;" is substituted therefor.

(Secs. 307(a) and 313(a), Federal Aviation Act of 1958 (49 U.S.C. 1348(a) and 1354(a)); sec. 6(c), Department of Transportation Act (49 U.S.C. 1655(c)); and 14 CFR 11.69.)

NOTE.—The FAA has determined that this document involves a proposed regulation which is not considered to be significant under the procedures and criteria prescribed by Executive Order 12044 and as implemented by interim Department of Transportation guidelines (43 FR 9582; March 8, 1978).

Issued in Washington, D.C., on August 31, 1978.

WILLIAM E. BROADWATER,
Chief, Airspace and Air Traffic Rules Division.

[FR Doc. 78-25437 Filed 9-8-78; 8:45 am]

[4910-13]

[Airspace Docket No. 78-RM-17]

PART 71—DESIGNATION OF FEDERAL AIRWAYS, AREA LOW ROUTES, CONTROLLED AIRSPACE AND REPORTING POINTS

Alteration of Denver Terminal Control Area

AGENCY: Federal Aviation Administration (FAA), DOT.

ACTION: Final rule.

SUMMARY: This amendment alters the Denver terminal control area (TCA). The amendment was necessary because of the relocation of the Denver VOR on November 2, 1978. The present terminal control area utilizes the Denver VOR to describe boundaries of the terminal area and the amendment will utilize the new Denver VOR to describe boundaries.

EFFECTIVE DATE: 0901 G.m.t. November 2, 1978.

FOR FURTHER INFORMATION CONTACT:

Mr. Joseph T. Taber, Operations, Procedures and Airspace Branch, Air Traffic Division, ARM-500, Federal Aviation Administration, Rocky Mountain Region, 10455 East 25th Avenue, Aurora, Colo. 80010, telephone 303-837-3937.

SUPPLEMENTARY INFORMATION:

HISTORY

On July 12, 1978, the FAA published for comment, a proposal to alter the Denver terminal control area (43 FR 31943). The only comments received expressed no objections. Subsequent to the issuance of the NPRM, it was noted that additional airspace in the surface to 110 foot floor could be deleted and additional airspace was necessary in the 100 foot to 110 foot floor to contain all instrument approaches

to Stapleton International Airport. These were considered minor changes and would be corrected in the final rule.

RULE

This amendment to part 71 of the Federal Aviation Regulations (FAR's) redefines the Denver terminal control area. The amendment will utilize the relocated Denver VOR to describe some of the boundaries of the terminal control area.

DRAFTING INFORMATION

The principal authors of this document are Mr. Joseph T. Taber, Operations, Procedures and Airspace Branch, Air Traffic Division, and Mr. Daniel J. Petersen, Office of Regional Counsel.

ADOPTION OF THE AMENDMENT

Accordingly, pursuant to the authority delegated to me by the Administrator, part 71 of the Federal Aviation Regulations (14 CFR Part 71) is amended effective November 2, 1978 as follows:

DENVER, COLO.

Denver, Colo., terminal control area, primary airport.
Denver Stapleton International Airport (lat. 39°45'55" N., long. 104°52'46" W.
Denver VORTAC lat. 39°48'02.12" N., long. 104°53'12.26" W.
Denver—Stapleton International distance measuring equipment (DME) antenna, lat. 39°45'51" N., long. 104°53'54" W.

BOUNDARIES

Area A: That airspace extending upward from the surface to and including 11,000 feet MSL beginning at a point 10 miles north of the Stapleton International DME antenna and 1.5 miles west of the Denver VORTAC 004° radial; thence clockwise along the 10-mile radius arc of the Stapleton International DME antenna to and south parallel 2.5 miles east of the Denver VORTAC 004° radial, to and clockwise along the 7-mile radius area of the Stapleton International DME antenna to and south parallel 4 miles east of the Denver VORTAC 004° radial to and east parallel 1.5 miles north of the Denver VORTAC 093° radial to and clockwise along the 7-mile radius circle of the Stapleton International DME antenna to and west along Colfax Avenue to and south parallel 3.5 miles east of the Denver VORTAC 184° radial to and clockwise along the 7-mile radius arc of the Stapleton International DME antenna to and north parallel 3.5 miles west of the Denver VORTAC 184° radial to and west parallel 5 miles south of the Denver VORTAC 273° radial to and clockwise along the 7-mile radius of the Stapleton International DME antenna to and east parallel 1.5 miles north of the Denver VORTAC 273° radial to and north parallel 1.5 miles west of the Denver VORTAC 004° radial to and clockwise along the 7-mile radius of the Stapleton International DME antenna to and north parallel 1.5 miles west of the Denver VORTAC 004° radial to point of beginning excluding prohibited area P26.

Area B: That airspace extending upward from 7,000 feet MSL to and including 11,000 feet MSL bounded on the north by the 16-mile point of the Stapleton International DME antenna and 3.5 miles west of the Denver VORTAC 004° radial, then clockwise along the 16-mile radius arc of the Stapleton International DME antenna to and south parallel 4 miles east of the Denver VORTAC 004° radial to and clockwise along the 10-mile radius arc of the Stapleton International DME antenna to and east parallel 1.5 miles north of the Denver VORTAC 093° radial to and clockwise along the 16-mile radius arc of the Stapleton International DME antenna to and west along Colfax Avenue to the 7-mile radius circle of the Stapleton International DME antenna. Thence beginning again at line 8.5 miles south of and parallel to the extended centerline of runway 26L/8R Stapleton International Airport and 3.5 miles west of the Denver VORTAC 184° radial, thence west parallel 8.5 miles south of the extended centerline of runway 26L/8R Stapleton International Airport to and clockwise along the 10-mile radius circle of the Stapleton International DME antenna to and north parallel 3.5 miles west of the Denver VORTAC 004° radial to point of beginning excluding areas A and C.

Area C: That airspace extending upward from 7,500 feet MSL to and including 11,000 feet MSL bounded on the north by Colfax Avenue, on the east by the 16-mile radius arc of the Stapleton International DME antenna, on the west by area A and a line parallel 3.5 miles west of the Denver VORTAC 184° radial to and east along a line 8.5 miles south and parallel of the extended centerline of runway 26L/8R Stapleton International Airport to and southeast bound along the 162° radial of the Denver VORTAC to the 16-mile radius arc of the Stapleton International DME antenna.

Area D: That airspace extending upward from 8,000 feet MSL to and including 11,000 feet MSL within a 16-mile radius of the Stapleton International DME antenna bounded on the west by 105°11'00" W. and that airspace east of Denver between the 16-mile and 20-mile radius circles centered on the Stapleton International DME antenna bounded on the north by Interstate 70 and on the west by the 162° radial of the Denver VORTAC excluding areas A, B, and C.

Area E: That airspace extending upward from 9,000 feet MSL to and including 11,000 feet MSL between the 16-mile and 20-mile radius circles centered on the Stapleton International DME antenna bounded on the north by a line 1.5 miles north of the Denver VORTAC 093° radial and on the south by Interstate 70 and that airspace north of Denver bounded on the west by a line 3.5 miles west of the Denver VORTAC 004° radial and on the east by a line 4 miles east of the Denver VORTAC 004° radial.

Area F: That airspace extending upward from 10,000 feet MSL to and including 11,000 feet MSL between the 16-mile and 20-mile radius circles centered on the Stapleton International DME antenna excluding areas D and E and that area west of 105°11'00" W.

(Sec. 307(a), Federal Aviation Act of 1958 (49 U.S.C. 1348 (a)); sec. 6(c), Department of Transportation Act (49 U.S.C. 1655(c); and 14 CFR 11.69).)

NOTE.—The Federal Aviation Administration has determined that this document does not contain a major proposal requiring preparation of an economic impact statement under Executive Order 11821, as amended by Executive Order 11949, and OMB Circular A-107.

Issued in Aurora, Colo., on August 31, 1978.

ISAAC H. HOOVER,
Deputy Director,
Rocky Mountain Region.

[FR Doc. 78-25441 Filed 9-8-78; 8:45 am]

[4910-13]

[Airspace Docket No. 78-SW-35]

PART 71—DESIGNATION OF FEDERAL AIRWAYS, AREA LOW ROUTES, CONTROLLED AIRSPACE, AND REPORTING POINTS

Alteration of Federal Airway

AGENCY: Federal Aviation Administration (FAA), DOT.

ACTION: Final rule.

SUMMARY: This amendment realines a segment of V-76 south alternate airway southeast of Llano, Tex., 1 degree. This action causes this segment to overlie the intersection of V-163 and V-306 airways. Combining two intersections which are approximately 1 mile apart will improve ATC efficiency by providing one reporting point.

EFFECTIVE DATE: November 2, 1978.

FOR FURTHER INFORMATION CONTACT:

Mr. Everett L. McKisson, Airspace Regulations Branch (AAT-230), Airspace and Air Traffic Rules Division, Air Traffic Service, Federal Aviation Administration, 800 Independence Avenue SW., Washington, D.C. 20591, telephone 202-426-3715.

SUPPLEMENTARY INFORMATION: The purpose of this amendment to part 71 of the Federal Aviation Regulations (14 CFR Part 71) is to redefine V-76S via the Llano 135° T (127° M) rather than the 134° T (126° M) radial. This action combines two intersections. Position reporting at the combined intersections of V-76S, V-163, and V-306 indicates a precise location that avoids confusion and improves ATC efficiency. Because this change constitutes a minor matter on which the public would have no particular interest, I find notice and public procedure thereon are unnecessary.

ADOPTION OF THE AMENDMENT

Accordingly, pursuant to the authority delegated to me by the Administrator, § 71.123 of part 71 of the Federal Aviation Regulations (14 CFR Part 71)

as republished (43 FR 307) and amended (43 FR 3544) is further amended, effective 0901 G.m.t., November 2, 1978, as follows:

Under V-76 "INT Llano 134°" is deleted and "INT Llano 135°" is substituted therefor.

(Secs. 307(a), 313(a), Federal Aviation Act of 1958 (49 U.S.C. 1348(a) and 1354(a)); sec. 6(c), Department of Transportation Act (49 U.S.C. 1655(c)); and 14 CFR 11.69.)

NOTE.—The FAA has determined that this document involves a proposed regulation which is not considered to be significant under the procedures and criteria prescribed by Executive Order 12044 and as implemented by interim guidelines of the Department of Transportation (43 FR 9582; March 8, 1978).

Issued in Washington, D.C., on August 31, 1978.

WILLIAM E. BROADWATER,
Chief, Airspace and Air Traffic Rules Division.

[FR Doc. 78-25439 Filed 9-8-78; 8:45 am]

[4910-13]

[Airspace Docket No. 77-PC-4]

PART 73—SPECIAL USE AIRSPACE

Alteration of Restricted Areas

AGENCY: Federal Aviation Administration (FAA), DOT.

ACTION: Final rule.

SUMMARY: This amendment subdivides restricted areas R-3109A and R-3109B, Schofield-Makua, Hawaii, into R-3109 A, B, and C, and R-3110 A, B, and C within the same lateral limits and raises their upper limits from 19,000 feet MSL to 29,000 feet MSL. This action permits the U.S. Army to conduct artillery high-angle firing training on the island of Oahu currently confined to the island of Hawaii.

EFFECTIVE DATE: November 2, 1978.

FOR FURTHER INFORMATION CONTACT:

Mr. Lewis W. Still, Airspace Regulations Branch (AAT-230), Airspace and Air Traffic Rules Division, Air Traffic Service, Federal Aviation Administration, 800 Independence Avenue SW., Washington, D.C. 20591, telephone 202-426-8525.

SUPPLEMENTARY INFORMATION: On March 23, 1978, the FAA proposed to amend part 73 of the Federal Aviation Regulations (14 CFR Part 73) to raise the upper limits of restricted areas R-3109A and R-3109B, Schofield-Makua, Hawaii, from 19,000 feet MSL to 29,000 feet MSL (43 FR 12028). The Department of the Army requested the higher limits so that 155-mm artillery high-angle firing training could be accomplished on the island of Oahu. Presently, this type of training has to be conducted on the island of Hawaii. Interested persons were invited to participate in the rulemaking proceeding by submitting comments on the proposal to the FAA.

One comment was received and no objection was stated to the proposal. After carefully reviewing the Army's request in the light of the considerations of section 306 of the Federal Aviation Act of 1958, the FAA concludes that it should exercise its authority under section 307(a) of the Act to provide additional designated airspace within the restricted area as proposed in the notice. This amendment is the same as that proposed in the notice. Section 73.31 was republished in the FEDERAL REGISTER on January 3, 1978 (43 FR 680).

THE RULE

This amendment to part 73 of the Federal Aviation Regulations (14 CFR Part 73) raises the upper limits of current R-3109A and R-3109B to 29,000 feet MSL so that 155-mm artillery high-angle firings can be accomplished on the island of Oahu. This alteration does not change the present combined lateral boundaries of the restricted areas. However, current R-3109 is redesignated herein as R-3109A, R-3109B and R-3109C, three vertical layers extending from the surface to 29,000 feet MSL. In addition, R-3109B is redesignated herein as R-3110A, R-3110B, and R-3110C, three vertical layers extending from the surface to 29,000 feet MSL. Currently, high-angle firing is conducted on the island of Hawaii. This amendment permits the U.S. Army to conduct necessary training on the island of Oahu.

ADOPTION OF THE AMENDMENT

Accordingly, pursuant to the authority delegated to me by the Administrator, § 73.31 of part 73 of the Federal Aviation Regulations (14 CFR Part 73) as republished (43 FR 680) is amended, effective 0901 G.m.t., November 2, 1978, by redescribing R-3109A and R-3109B and adding R-3109C, R-3110A, R-3100B, and R-3110C to read as follows:

R-3109A SCHOFIELD-MAKUA, OAHU, HAWAII

Boundaries. Beginning at latitude 21°30'29" N., longitude 158°04'09" W.; to latitude 21°29'25" N., longitude 158°05'00" W.; to latitude 21°27'28" N., longitude 158°05'55" W.; to latitude 21°29'11" N., longitude 158°07'35" W.; to latitude 21°29'30" N., longitude 158°08'40" W.; to latitude 21°33'15" N., longitude 158°08'40" W.; to latitude 21°32'14" N., longitude 158°05'12" W.; to point of beginning.

Designated altitudes. Surface to but not including 9,000 feet MSL.

Time of designation. Intermittent.

Controlling agency. FAA, Honolulu Flight Service Station.

Using agency. U.S. Army, Hawaii, Schofield Barracks, Hawaii.

R-3109B SCHOFIELD-MAKUA, OAHU, HAWAII

Boundaries. Beginning at latitude 21°30'29" N., longitude 158°04'09" W.; to latitude 21°29'25" N., longitude 158°05'00" W.; to latitude 21°27'28" N., longitude 158°05'55" W.; to latitude 21°29'11" N., longitude 158°07'35" W.; to latitude 21°29'30" N., longitude 158°08'40" W.; to latitude 21°33'15" N., longitude 158°08'40" W.; to latitude 21°32'14" N., longitude 158°05'12" W.; to point of beginning.

Designated altitudes. From 9,000 feet MSL to but not including 19,000 feet MSL.

Time of designation. Intermittent.

Controlling agency. FAA, Honolulu Flight Service Station.

Using agency. U.S. Army, Hawaii, Schofield Barracks, Hawaii.

R-3109C SCHOFIELD-MAKUA, OAHU, HAWAII

Boundaries. Beginning at latitude 21°30'29" N., longitude 158°04'09" W.; to latitude 21°29'25" N., longitude 158°05'00" W.; to latitude 21°27'28" N., longitude 158°05'55" W.; to latitude 21°29'11" N., longitude 158°07'35" W.; to latitude 21°29'30" N., longitude 158°08'40" W.; to latitude 21°33'15" N., longitude 158°08'40" W.; to latitude 21°32'14" N., longitude 158°05'12" W.; to point of beginning.

Designated altitudes. From 19,000 feet MSL to 29,000 feet MSL.

Time of designation. Intermittent.

Controlling agency. FAA, Honolulu Flight Service Station.

Using agency. U.S. Army, Hawaii, Schofield Barracks, Hawaii.

R-3110A SCHOFIELD-MAKUA, OAHU, HAWAII

Boundaries. Beginning at latitude 21°29'30" N., longitude 158°08'40" W.; to latitude 21°31'00" N., longitude 158°14'00" W.; to latitude 21°32'30" N., longitude 158°14'30" W.; to latitude 21°33'15" N., longitude 158°15'15" W.; to latitude 21°34'30" N., longitude 158°15'15" W.; to latitude 21°34'30" N., longitude 158°13'15" W.; to latitude 21°33'15" N., longitude 158°08'40" W.; to point of beginning.

Designated altitudes. Surface to but not including 9,000 feet MSL.

Time of designation. Intermittent.

Controlling agency. FAA, Honolulu Flight Service Station.

Using agency. U.S. Army, Hawaii, Schofield Barracks, Hawaii.

R-3110B SCHOFIELD-MAKUA, OAHU, HAWAII

Boundaries. Beginning at latitude 21°29'30" N., longitude 158°08'40" W.; to latitude 21°31'00" N., longitude 158°14'00" W.; to latitude 21°32'30" N., longitude 158°14'30" W.; to latitude 21°33'15" N., longitude 158°15'15" W.; to latitude 21°34'30" N., longitude 158°15'15" W.; to latitude 21°34'30" N., longitude 158°13'15" W.; to latitude 21°33'15" N., longitude 158°08'40" W.; to point of beginning.

Designated altitudes. From 9,000 feet MSL to but not including 19,000 feet MSL.

Time of designation. Intermittent.

Controlling agency. FAA, Honolulu Flight Service Station.

Using agency. U.S. Army, Hawaii, Schofield Barracks, Hawaii.

R-3110C SCHOFIELD-MAKUA, OAHU, HAWAII

Boundaries. Beginning at latitude 21°29'30" N., longitude 158°08'40" W.; to latitude 21°31'00" N., longitude 158°14'00" W.; to latitude 21°32'30" N., longitude 158°14'30" W.; to latitude 21°33'15" N., longitude 158°15'15" W.; to latitude 21°34'30" N., longitude 158°15'15" W.; to latitude 21°34'30" N., longitude 158°13'15" W.; to latitude 21°33'15" N., longitude 158°08'40" W.; to point of beginning.

Designated altitudes. From 19,000 feet MSL to 29,000 feet MSL.

Time of designation. Intermittent.

Controlling agency. FAA, Honolulu Flight Service Station.

Using agency. U.S. Army, Hawaii, Schofield Barracks, Hawaii.

(Secs. 307(a) and 313(a), Federal Aviation Act of 1958 (49 U.S.C. 1348(a) and 1354(a)); sec. 6(c), Department of Transportation Act (49 U.S.C. 1655(c)); and 14 CFR 11.69.)

NOTE.—The FAA has determined that this document involves a proposed regulation which is not considered to be significant under the procedures and criteria prescribed by Executive Order 12044 and as implemented by interim Department of Transportation guidelines (43 FR 9582; March 8, 1978).

Issued in Washington, D.C., on August 31, 1978.

WILLIAM E. BROADWATER,
Chief, Airspace and Air Traffic Rules Division.

[FR Doc. 78-25438 Filed 9-8-78; 8:45 am]

[4910-13]

[Airspace Docket No. 78-WE-16]

PART 73—SPECIAL USE AIRSPACE

Alteration of Restricted Area

AGENCY: Federal Aviation Administration (FAA), DOT.

ACTION: Final rule.

SUMMARY: This amendment alters the description of restricted area R-2507, Chocolate Mountains, Calif., by subdividing the area into R-2507A and R-2507B. There are no changes to the current lateral and vertical limits of this restricted area. The redesignation of R-2507 gives the U.S. Navy more flexibility in the management of this area by releasing airspace for public use when it is not being used by the using agency.

EFFECTIVE DATE: November 2, 1978.

FOR FURTHER INFORMATION CONTACT:

Mr. Lewis W. Still, Airspace Regulations Branch (AAT-230), Airspace and Air Traffic Rules Division, Air Traffic Service, Federal Aviation Administration, 800 Independence Avenue SW., Washington, D.C. 20591, telephone 202-426-8525.

SUPPLEMENTARY INFORMATION: The purpose of this amendment to subpart B of part 73 of the Federal Aviation Regulations (14 CFR Part 73) is to facilitate the joint use of restricted area R-2507 by subdividing it as R-2507A and R-2507B. The FAA and the U.S. Navy have agreed to release the subareas for public use when the U.S. Navy has not scheduled training for that area. There are no changes to the lateral boundaries or vertical limits of R-2507. Subpart B of part 73 of the Federal Aviation Regulations was republished in the FEDERAL REGISTER on January 3, 1978 (43 FR 667). Since this amendment is a minor matter on which the public would have no particular desire to comment, notice and public procedure thereon are unnecessary.

ADOPTION OF THE AMENDMENT

Accordingly, pursuant to the authority delegated to me by the Administrator, § 73.25 of part 73 of the Federal Aviation Regulations (14 CFR Part 73) as republished (43 FR 667) is amended, effective 0901 G.m.t., November 2, 1978, by deleting the designation of "R-2507 Chocolate Mountains, California" and substituting for it the designations of R-2507A and R-2507B to read as follows:

R-2507A CHOCOLATE MOUNTAINS, CALIF.

Boundaries. Beginning at latitude 33°32'40" N., longitude 115°33'50" W.; to latitude 33°31'30" N., longitude 115°32'00" W.; to latitude 33°31'15" N., longitude 115°26'45" W.; to latitude 33°29'00" N., longitude 115°20'00" W.; to latitude 33°25'50" N., longitude 115°14'30" W.; to latitude 33°24'15" N., longitude 115°17'00" W.; to latitude 33°23'00" N., longitude 115°14'30" W.; to latitude 33°14'00" N., longitude 115°22'30" W.; to latitude 33°21'30" N., longitude 115°32'55" W.; to latitude 33°23'40" N., longitude 115°33'20" W.; to latitude 33°28'30" N., longitude 115°42'10" W.; thence to point of beginning.

Designated altitudes. Surface to FL 400.

Time of designation. Continuous.

Controlling agency. Federal Aviation Administration, Los Angeles ARTC Center.

Using agency. Commanding Officer, U.S. Marine Corps Air Station, Yuma, Ariz.

R-2507B CHOCOLATE MOUNTAINS, CALIF.

Boundaries. Beginning at latitude 33°23'00" N., longitude 115°14'30" W.; to latitude 33°21'40" N., longitude 115°12'00" W.; to latitude 33°22'50" N., longitude 115°09'58" W.; to latitude 33°08'45" N., longitude 115°56'40" W.; to latitude 33°01'00" N., longitude 115°06'00" W.; to latitude 33°14'00" N., longitude 115°22'30" W.; thence to point of beginning.

Designated altitudes. Surface to FL 400.

Time of designation. Continuous.

Controlling agency. Federal Aviation Administration, Los Angeles ARTC Center.

Using agency. Commanding Officer, U.S. Marine Corps Air Station, Yuma, Ariz.

(Secs. 307(a) and 313(a), Federal Aviation Act of 1958 (49 U.S.C. 1348(a) and 1354(a)); sec. 6(c), Department of Transportation Act (49 U.S.C. 1655(c)); and 14 CFR 11.69.)

NOTE.—The FAA has determined that this document involves a proposed regulation which is not considered to be significant under the procedures and criteria prescribed by Executive Order 12044 and as implemented by interim Department of Transportation guidelines (43 FR 9582; March 8, 1978).

Issued in Washington, D.C., on August 31, 1978.

WILLIAM E. BROADWATER,
Chief, Airspace and Air Traffic Rules Division.

[FR Doc. 78-25440 Filed 9-8-78; 8:45 am]

[6740-02]

Title 18—Conservation of Power and Water Resources

CHAPTER I—FEDERAL ENERGY REGULATORY COMMISSION

[Docket No. RM-78-9]

SHORT-FORM HYDROELECTRIC LICENSE

Final Rule

AGENCY: Federal Energy Regulatory Commission.

ACTION: Final rule.

SUMMARY: The Commission amends its rules and regulations in order to establish a short-form hydroelectric license. In addition, a new application form is established with accompanying instructions for completing the application for a short-form license. The purpose of the rulemaking is to provide a simplified procedure and format for processing applications for small-scale water power projects that meet specific size criteria. Availability of such procedures would save time for the applicant and the Commission staff. It would eliminate obstacles to the development of small capacity water power projects in furtherance of national policies for conservation of fossil fuels.

DATES: The amendments are effective September 5, 1978.

FOR FURTHER INFORMATION CONTACT:

Ronald Corso, Office of Electric Power Regulation, 202-275-4863, Raymond Hagenlock, Office of the General Counsel, 202-275-4271.

The Federal Energy Regulatory Commission (Commission) gives notice that it is amending the General Rules and Regulations under the Federal Power Act, Subchapters A, B, and D, Chapter I, Title 18, Code of Federal Regulations. These amendments establish a short-form water power li-

cense (minor) and a new application form with accompanying instructions for completing the application for a short-form license (minor).

As stated in the notice of proposed rulemaking, 43 FR 18196 (April 28, 1978), the purpose of these amendments is to provide a simplified procedure and format for processing applications for small-scale water power projects. This procedure should save time for the applicant and the Commission staff, as well as to eliminate unnecessary obstacles to the development of small capacity water power projects, in furtherance of national policies for conservation of fossil fuels.[1]

The number of inquiries received by Commission staff in recent months concerning the installation of additional generating capacity at existing water power projects, the redevelopment of existing projects to provide additional power, and the installation of power generating facilities at existing non-power dams has increased sharply. This interest has been accompanied by a substantial increase in the number of applications filed with the Commission.

The proposed rulemaking would have imposed three eligibility criteria for a project to obtain a short-form license (minor). These were: (1) The project dam or diversion structure could be no more than 25 feet in height above stream bed; (2) the project could not impound a reservoir having a surface area of 10 acres or more; and (3) the project generating capacity could not exceed 2,000 horsepower (1,500 kilowatts). After examining the comments, reevaluating the criteria, and considering the legal and policy questions involved, the Commission has decided to eliminate the first and second limiting criteria to widen the applicability of the short-form license (minor) procedure to all projects having a generating capacity of 2,000 HP (1,500 kW) or less (that is, all "minor" projects).

In response to the notice, 18 entities and 1 individual submitted comments for Commission consideration.[2] The comments were generally favorable to the proposal, but most also expressed the view that the criteria used were far too restrictive, and should be expanded so that more applications could be processed under the streamlined procedure.

One common suggestion was that the generation limit be raised from 1,500 kW (1.5 MW) to 15 MW. The latter figure is the upper limit selected for the small hydroelectric project incentive program included in the National Energy Act now pending in Congress. These short-form license (minor) procedures are specifically intended to apply only to minor projects, those with installed capacity of 2,000 HP or less (i.e., 1.5 MW), for which the Commission may waive certain provisions of the Federal Power Act, as authorized in Section 10(i), 16 U.S.C. 803(i). But the Commission intends to simplify its hydroelectric licensing procedures for major projects as well. Its staff is currently reviewing these procedures and developing recommendations for the Commission's consideration. Thus, future rulemakings will propose additional simplified licensing procedures for major projects between 2,000 HP and 20,000 HP (15 MW), as well as for major projects larger than 20,000 HP, in generating capacity.

Another suggestion common to many of the comments was that the height limitation be increased from 25 feet to 66 feet (20 meters). The higher figure is used by the Department of Energy in its Program Research and Development Announcement (PRDA), ET—78-D-07-1706. The 25-foot limitation was originally selected because it corresponded to the dam height set by Congress in the National Dam Inspection Act, 33 U.S.C. 467a-467e, as the upper limit for dams to be considered in a "low hazard" category. Comments generally pointed out that any size limitation based on safety reasons was irrelevant because at the time of licensing the Commission must find all dams safe and adequate, or capable of being made safe by taking appropriate action as spelled out in the licensing order and instrument. The Commission agrees and also notes that, for an existing but unlicensed project which is subject to our jurisdiction, the public health, safety, and welfare are better served by procedures which allow the swift issuance of a license for that project, but requiring the owner to take actions to make the project safe under penalty of law, than by a more cumbersome and lengthy licensing process required by a dam height limit. Thus, the Commission is eliminating the dam height criterion.

The final suggestion common to many of the comments was that the 10-acre reservoir size limitation was too restrictive. This limitation was based upon section 2 of the Fish and Wildlife Coordination Act (FWCA).[3] Upon further review, the Commission concludes that the consultation requirements of the FWCA will be satisfied by its solicitation of the relevant Federal and State agencies' comments by means of forwarding to those agencies a copy of the public notice of the application for license. The public notices, which are issued pursuant to the Federal Power Act,[4] will explicitly solicit comments. The Commission also notes that these Federal and State agencies are given a prior opportunity for comment and input on the proposed project very early in the process, because the short-form procedures require the applicant to consult with these agencies and include evidence of such consultation as part of the application submitted to the Commission. Furthermore, the agencies may obtain copies of the application from the Commission or the applicant upon request. Therefore, the Commission has decided to eliminate the criterion relating to reservoir size for projects that would otherwise be eligible for a short-form license (minor).

Finally, some comments suggested certain other changes in the new procedures—such as making them applicable to applications for relicensing and requiring only that a water quality certificate be applied for at the time of license application to this Commission, rather than be included with the short-form application. Those and other minor suggested changes have been made. In addition, the Commission is extending the new procedure to qualifying existing license applications already on file, as well as to future filings.

As a result of the changes discussed above, all existing "minor" license applications will be processed under the new short-form license (minor) procedures. Thus, the amendments to Commission regulations made below generally delete the existing sections dealing with "minor" licenses and substitute new sections for short-form licenses (minor). While some section numbers may thus be different from those in the notice of proposed rulemaking, the sections themselves are essentially the same.

The short-form license (minor) procedures in the notice of proposed rulemaking also contained proposed new forms L-22 and L-23, which were li-

[1] For example, the National Energy Act proposals now under consideration by a Joint Conference Committee of the United States Senate and House of Representatives include a program for loans, encouragement, and expeditious licensing for certain hydroelectric projects with no more than 20,000 HP (15 megawatts) installed capacity.

[2] Letters of comments were received from: Southern California Edison Co.; the Salt River Project; the New England Energy Task Force; the New England Regional Energy Advisory Board; the New England States Commissions; the National Rural Electric Cooperative Association; the Straflo Group; American Public Power Association; Central Vermont Public Service Corp.; LeBoeuf, Lamb, Leiby & MacRae; Power authority of the State of New York; Robert J. Taylor; the U.S. Department of the Interior, Heritage Conservation and Recreation Service; Central Maine Power Co.; Duke Power Co.; Maine Hydroelectric Development Corp.; the Mead Corp.; Allegheny Power Service Corp.; and Linton, Mields, Reisler & Cotton, Ltd.

[3] 16 U.S.C. 662.

[4] 16 U.S.C. 797 (e) and (f).

cense order formats containing, inter alia, standard license articles. The expansion of the short-form license (minor) procedures to cover all minor projects obviates the need for any new forms. For standard license articles for short-form licenses (minor), the Commission will select the appropriate form from the current forms L-9, L-12, and L-14 through L-19 (revised October 1975) applicable to minor projects. (See 18 CFR 2.9 and Order No. 540, 40 FR 51998 (November 7, 1975).) For information, a typical format for a short-form license (minor) is attached as appendix A to this notice.

The Commission is making these amendments effective immediately. Because the amendments reduce the filing requirements in a certain type of application, they involve a substantive rule which relieves a restriction and are not required to be published 30 days prior to their effective date.

(Federal Power Act, as amended, 16 U.S.C. 792 et seq., Department of Energy Organization Act, Pub. L. 95-91, Executive Order 12009, 42 FR 46267)

For the reasons stated above, parts 3, 4, 16, and 131 of Chapter I, Title 18, Code of Federal Regulations, are amended as set forth below, effective immediately.

By the Commission.

KENNETH F. PLUMB,
Secretary.

SUBCHAPTER A—GENERAL RULES

PART 3—ORGANIZATION; OPERATION; INFORMATION AND REQUESTS

1. Section 3.114 is amended by revising paragraph (b) to read:

§ 3.114 Licenses.

* * * * *

(b) Applications under the Federal Power Act for license authorizing construction of projects; for license for constructed projects; and for renewal of licenses for projects are processed in the manner stated in § 3.113.

* * * * *

SUBCHAPTER B—REGULATIONS UNDER THE FEDERAL POWER ACT

PART 4—LICENSES, PERMITS, AND DETERMINATION OF PROJECT COSTS

2. Part 4 is amended by revising § 4.60 to read:

§ 4.60 Contents.

Each application for a short-form license (minor) for a water power project having installed capacity of 2,000 horsepower (1,500 kW) or less, whether constructed or to be constructed, shall conform to § 131.6 of this chapter and shall be filed in accordance with § 4.31 of this chapter.

PART 16—PROCEDURES RELATING TO TAKEOVER AND RELICENSING OF LICENSED PROJECTS

3. Part 16 is amended by revising § 16.12 to read:

§ 16.12 Renewal of minor or minor part license or short-form license (minor) not subject to sections 14 and 15.

A licensee whose minor or minor part license or short-form license (minor) is not subject to sections 14 and 15 of the Act and who wishes to continue operation of the project after the end of the license term shall file an application for a "new license" 1 year prior to the expiration of the original license in accordance with applicable provisions of part 4 of this chapter. Each application for new license under this section shall conform to § 131.6 of this chapter, and shall set forth all information and exhibits prescribed in § 4.60 of this chapter.

SUBCHAPTER D—APPROVED FORMS, FEDERAL POWER ACT

PART 131—FORMS

4. Part 131 is amended by revising § 131.6 to read:

§ 131.6 Application for Short-Form License (Minor).

(See Section 4.60 of this chapter.)

APPLICATION FOR SHORT-FORM LICENSE (MINOR)

1. Applicant's full name and address: ——

_____ (ZIP code)

2. Location of project:
State: _____
County: _____
Nearest town: _____
Water body: _____

3. Project description and proposed mode of operation (reference to exhibits K and L, as appropriate):

_____

(continue on separate sheet, if necessary).

4. Lands of the United States affected (shown on exhibit K):

Name and acres

a. National forest _____
b. Indian reservation _____
c. Public lands under jurisdiction of ——
d. Other _____
e. Total U.S. lands _____
f. Check appropriate box:

☐ Surveyed
☐ Unsurveyed land in public-land State:

(1) If surveyed land in public-land State provide the following:

Sections and subdivisions: _____
Range: _____
Township: _____
Principal base and meridian: _____

(2) If unsurveyed or not in public-land State, see item 7 of instructions.

5. Purposes of project (use of power output, etc.).

6. Construction of the project is planned to start ———— it will be completed within —— months from the date of issuance of license.

7. List here and attach copies of State water permits or other permits obtained authorizing the use or diversion of water, or authorizing (check appropriate box):

☐ The construction, operation, and maintenance.
☐ The operation and maintenance of the proposed project.

8. Attach an environmental report prepared in accordance with the requirements set forth in the instructions for completing application for short-form license (minor), below.

9. Attach exhibits K and L drawings.

10. State of ————, county of ————, ss:

_____

_____

being duly sworn, depose(s) and say(s) that the contents of this application are true to the best of —— knowledge or belief and that (check appropriate box):

☐ ———— is (are) a citizen(s) of the United States,
☐ All members of the association are citizens of the United States,
☐ ———— is (are) the duly appointed agent(s) of the State (municipality) (corporation)

and has (have) signed this application this —— day of ————, 19——.

(Applicant(s)) ————.
By ————.

Subscribed and sworn to before me, a notary public of the State of ————, this —— day of ————.

[SEAL] ————.
(Notary Public.)

INSTRUCTIONS FOR COMPLETING APPLICATION FOR SHORT-FORM LICENSE (MINOR)

GENERAL

1. This application may be used if the proposed or existing project will have or has a total generating capacity of not more than 1,500 kW (2,000 horsepower). Advice regarding the proper procedure for filing should be requested from the Federal Energy Regulatory Commission in Washington, D.C.; or from one of the Commission's regional offices in Atlanta, Chicago, Fort Worth, New York, or San Francisco.

2. This application is to be completed and filed in an original and nine copies with the Federal Energy Regulatory Commission, 825 North Capitol Street NE., Washington, D.C. 20426. Each of the original and the nine copies of the application is to be accompanied by:

a. One copy each of exhibits K and L described below.

b. One copy each of a State water quality certificate pursuant to section 401 of the Federal Water Pollution Control Act (or evidence that this certificate is not needed), and any water rights certificate or similar

evidence required by State law relating to use or diversion of water. In lieu of submitting a copy of a section 401 certificate (or other certificate), evidence that applications for these certificates have been filed with appropriate agencies, or that such certificates are not necessary, will be adequate to begin FERC processing of the application.

c. One copy each of any other state approvals necessary. (Applicant should contact the State natural resources department or equivalent to ascertain whether any such approvals are necessary.)

d. One copy of applicant's environmental report, described below.

3. Applicant is required to consult with appropriate Federal, State, and local resources agencies during the preparation of the application and provide interested agencies with the opportunity to comment on the proposal prior to its filing with the Commission. The comments of such agencies must be attached to the application when filed. A list of agencies to be consulted can be obtained from the Commission's main office or the appropriate regional office.

4. No work may be started on the project until receipt of a signed license from the Commission. The application itself does not authorize entry upon Federal land for any purpose. If the project is located in part or in whole upon Federal land, the applicant should contact the appropriate land management agency regarding the need to obtain a right-of-way permit. As noted above, other State or Federal permits may be required.

5. An applicant must be: A citizen or association of citizens of the United States; a corporation organized under the laws of the United States or a State; a State; or a municipality.

(a) If the applicant is a natural person, include an affidavit of U.S. citizenship.

(b) If the applicant is an association, include one verified copy of its articles of association. If there are no articles of association, that fact shall be stated over the signature of each member of the association. Also include a complete list of members and a statement of the citizenship of each in an affidavit by one of them.

(c) If the applicant is a corporation, include one copy of the charter or certificate and articles of incorporation, with all the amendments, duly certified by the secretary of state of the State where organized, and one copy of the bylaws. If the project is located in a State other than that in which the corporation is organized, include a certificate from the secretary of state of the State in which the project is located showing compliance with the laws relating to foreign corporations.

(d) If the applicant is a State, include a copy of the laws under the authority of which the application is made.

(e) If the applicant is a municipality as defined in the Federal Power Act, include one copy of its charter or other organization papers, duly certified by the secretary of state of the State in which it is located, or other proper authority. Also include a copy of the State laws authorizing the operations contemplated by the application.

Include a copy of all minutes, resolutions of stockholders or directors, or other representatives of the applicant, properly attested, authorizing the filing of the application. This information can be provided by a letter attached to the application.

6. If the stream or water body is unnamed, give the name of the nearest named stream or water body to which it is tributary.

7. The project description (application item 4) shall include, as appropriate: The number of generating units, including auxiliary units, the capacity of each unit, and provisions, if any, for future units; type of hydraulic turbine(s); a description of how the plant is to be operated, manual or automatic, and whether the plant is to be used for peaking; estimated average annual generation in kilowatt-hours or mechanical energy equivalent; estimated average head on the plant; reservoir surface area in acres and, if known, the net and gross storage capacity; estimated hydraulic capacity of the plant (flow through the plant) in cubic feet per second; estimated average flow of the stream or water body at the plant or point of diversion; sizes, capacities, and construction materials, as appropriate, of pipelines, ditches, flumes, canals, intake facilities, powerhouses, dams, transmission lines, etc.; and estimated cost of the project.

8. In the case of unsurveyed public land, or land not in a public-lands State, give the best legal description available. Include the distance and general direction from the nearest city or town, fixed monument, physical features, etc.

9. Exhibits K and L shall be submitted on separate drawings. Drawings for exhibits K and L shall have identifying title blocks and bear the following certification: "This drawing is a part of the application for license made by the undersigned this —— day of ————, 19——.

————————,"

(Name of applicant.)

10. The Commission reserves the right to require additional information, or another filing procedure, if data provided indicate such action to be appropriate.

EXHIBIT K—PROJECT LANDS AND BOUNDARIES

1. The exhibit K is a planimetric map showing the portion of the stream developed, the location of all project works, and other important features, such as: the dam or diversion structure, reservoir pipeline, powerplant, access roads, transmission lines, project boundary, private land ownerships (clearly differentiate between fee ownership and land over which applicant only owns an easement), and Federal land boundaries and identifications.

2. The map shall be an ink drawing or drawing of similar quality on a sheet not smaller than 8 inches by 10½ inches, drawn to a scale no smaller than 1 inch equals 1,000 feet. Ten legible prints shall be submitted with the application. Upon request after review of the application, the tracing must be submitted.

3. The project boundary shall be drawn on the map so that the relationship of each project facility and reservoir to other property lines can be determined. The boundary shall enclose all project works, such as the dam, reservoir, pipelines, roads, powerhouse, and transmission lines. The boundary shall be set at the minimum feasible distance from project works necessary to allow operation and maintenance of the project and control of the shoreline and reservoir. The distance in feet from each principle facility to the boundary shall be shown. The project boundary should be a surveyed line with stated courses and distances. A tape-compass survey is acceptable. True north shall be indicated on the map. The area of Federal land in acres within the project boundary shall be shown. The appropriate Federal agency should be contacted for assistance in determining the Federal land acreage. For clarity, use inset sketches to a larger scale than that used for the overall map to show relationships of project works, natural features, and property lines.

4. Show one or more ties by distance and bearing from a definite, identifiable point or points on project works or the project boundary to established corners of the public land survey or other survey monuments, if available.

5. If the project affects unsurveyed Federal lands, the protraction of township and section lines shall be shown. Such protractions, whenever available, shall be those recognized by the agency of the United States having jurisdiction over the lands. On unsurveyed lands, show ties by distance and bearing to fixed recognizable objects.

6. If the project uses both Federal and private lands, the detailed survey descriptions discussed above for the project boundary apply only to Federal lands. General location data and an approximate project boundary will normally suffice for project works on private lands.

EXHIBIT L—PROJECT STRUCTURES AND EQUIPMENT

1. The exhibit shall be a simple ink drawing or drawing of similar quality on a sheet no smaller than 8 inches by 10½ inches, drawn to a scale no smaller than 1 inch equals 50 feet for plans and profiles, and 1 inch equals 10 feet for sections. Ten legible prints shall be submitted with the application. Upon request after initial review of the application, tracings must be submitted.

2. The drawing shall show a plan, elevation, and section of the diversion structure and powerplant. Generating and auxiliary equipment proposed should be clearly and simply depicted and described. Include a north arrow on the plan view.

ENVIRONMENTAL REPORT

The environmental report should be consistent with the scope of the project and the environmental impacts of the proposed action; e.g., authorization to operate and maintain an existing project, or a project using an existing dam or other facility, would require less detailed information than authorization to construct a new project. The environmental report shall set forth in a clear and concise manner:

(1) A brief description of the project and the mode of operation, i.e., run-of-river, peaking or other specific mode.

(2) A description of the environmental setting in and near the project area, to include vegetative cover, fish and wildlife resources, water quality and quantity, land and water uses, recreational use, socio-economic aspects, historical and archeological resources, and visual resources. Special attention shall be provided endangered and threatened plant and animal species, critical habitats, and sites eligible for or included on the National Register of Historic Places. Assistance in the preparation of this information may be obtained from state natural resources departments and from local offices of Federal natural resources agencies.

(3) A description of the expected environmental impacts resulting from the continued operation of an existing project, or

from the construction and operation of a new project or a project using an existing dam or other existing facility. Include a discussion of specific measures proposed by the Applicant and others to protect and enhance environmental resources and to mitigate adverse impacts of the project on the environmental resources and values, the cost of those measures, and the party undertaking to implement those measures if other than the Applicant.

(4) A description of alternative means of obtaining an amount of power equivalent to that provided by the project in the event that construction or continued operation of the project is not authorized.

(5) A description of the steps taken by the Applicant in consulting with Federal, State, and local agencies during preparation of the environmental report. Indicate which agencies have received the final report and provide copies of letters containing the comments of those agencies.

APPENDIX A

UNITED STATES OF AMERICA

FEDERAL ENERGY REGULATORY COMMISSION

SHORT-FORM LICENSE (MINOR)

Before Commissioners:
[Applicant]

Project No. ——

ORDER ISSUING SHORT-FORM LICENSE

An application was filed on —— and supplemented on —— by —— for a short-form license (minor) for a water power project.

[discussion, if any]

Issuance of a license for the project is in the public interest and in conformance with all applicable provisions of the Federal Power Act.

The Commission orders: (A) This license is issued to —— (Licensee) of ——, for a period effective the first day of the month in which this order is issued, and terminating —— for ["construction, operation, and maintenance" or "operation and maintenance", as suitable] of Project No. —— located on ——, [a tributary of the ——,] subject to the terms and conditions of the Federal Power Act, insofar as not expressly waived here, which Act is incorporated by reference as part of this license, and subject to such rules and regulations as the Commission issues or prescribes under the provisions of the Act.

(B) This project consists of: (i) All lands constituting the project area and enclosed by the project boundary, to the extent of the licensee's interests in those lands. The project area and the project boundary are shown and described by certain exhibit K drawing(s), FERC No(s). ——, which also form part of the application for license.

(ii) Project works consisting of: [works listed] The location, nature, and character of these project works are more specifically shown and described by the exhibit cited above and by exhibit L drawing(s), FERC No(s). ——, which also form part of the application for license.

(iii) All of the structures, fixtures, equipment, or facilities used or useful in the maintenance and operation of the project and located in the project area, and any other property used or useful in connection with the project or any part of it; together with all riparian or other rights, the use or possession of which is necessary or appropriate in the maintenance or operation of the project.

The exhibits designated and described above in this paragraph (B) are approved and made a part of the license.

(C) Pursuant to section 10(i) of the Federal Power Act, it is in the public interest to waive the following sections of part I of the Act, and they are excluded from the license: 4(b), Except the second sentence relating to free access by the Commission or its agents to the project works and project records; 4(e), insofar as it relates to approval of plans by the Chief of Engineers and the Secretary of the Army; 10(c), insofar as it relates to depreciation reserves; 10(d); 10(f); 11; 12; 14, except insofar as the power of condemnation is reserved; 15; 16; 18, except as it relates to fishways; 19, 20; 21; 22; and 23(a), insofar as it relates to the determination of fair value.

(D) This license is also subject to the terms and conditions designated Articles 1 through —— in Form L ——, entitled ——, attached to and made a part of this license. This license is also subject to these additional special terms and conditions:

[any special articles]

(E) This order shall become final 30 days from the date of its issuance unless an application for rehearing shall be filed as provided in Section 313(a) of the Federal Power Act, and failure to file such an application shall constitute acceptance of this license. The acknowledgement of acceptance attached to this license shall be signed for the Licensee and returned to the Commission within 60 days from the date of issuance of this order.

By the Commission.

Secretary.

APPENDIX A

In testimony of (its) acknowledgement of acceptance of all of the terms and conditions of the foregoing order, (Name) ——, this —— day of ——, 19—, has caused his (its corporate) name to be signed hereto (by —— its President, and its corporate seal to be affixed hereto and attested by ——, its —— Secretary, pursuant to a resolution of its Board of Directors duly adopted on the —— day of ——, 19—, a certified copy of the record of which is attached hereto).

——
(By ——)

Attest:

——
Secretary.

NOTE.—Execute in quadruplicate. Statements within brackets apply only to corporations, municipalities and associations of citizens.

[FR Doc. 78-25423 Filed 9-8-78; 8:45 am]

[4830-01]

Title 26—Internal Revenue

CHAPTER I—INTERNAL REVENUE SERVICE, DEPARTMENT OF THE TREASURY

SUBCHAPTER A—INCOME TAX

PART 1—INCOME TAX; TAXABLE YEARS BEGINNING AFTER DECEMBER 31, 1953

SUBCHAPTER F—PROCEDURE AND ADMINISTRATION

[T.D. 7563]

PART 301—PROCEDURE AND ADMINISTRATION

Returns of Trusts and Information Returns of Certain Exempt Organizations Upon Liquidation

AGENCY: Internal Revenue Service, Treasury.

ACTION: Final regulations.

SUMMARY: This document provides final regulations relating to information returns required to be filed by certain exempt organizations upon liquidation. Changes to the applicable law were made by the Tax Reform Act of 1969. These regulations provide necessary guidance to certain trusts and exempt organizations for compliance with the law, and affect certain trusts and exempt organizations that liquidate or otherwise terminate their status as an exempt organization.

DATE: In general, except where otherwise provided, the regulations are effective for taxable years beginning after December 31, 1969.

FOR FURTHER INFORMATION CONTACT:

Robert Katcher of the Legislation and Regulations Division, Office of the Chief Counsel, Internal Revenue Service, 1111 Constitution Avenue NW., Washington, D.C. 20224, Attention: CC:LR:T, 202-566-3432, not a toll-free call.

SUPPLEMENTARY INFORMATION:

BACKGROUND

On Tuesday, April 13, 1971, the FEDERAL REGISTER published proposed amendments to the Income Tax Regulations (26 CFR Part 1) and the Regulations on Procedure and Administration (26 CFR Part 301) under sections 6034 and 6043 of the Internal Revenue Code of 1954, 36 FR 7012. The amendments were proposed to conform the regulations to section 101(j) (32), (33), (34), and (35) of the Tax Reform Act of 1969 (83 Stat. 487). A public hearing

was held on August 8, 1972. After consideration of all comments regarding the proposed amendments, those amendments are adopted as revised by this Treasury decision.

RETURNS REGARDING LIQUIDATION, DISSOLUTION, TERMINATION OR CONTRACTION

The proposed regulations required organizations exempt from taxation under section 501(a) for any of its 5 taxable years prior to any liquidation, dissolution, termination, or substantial contraction, to file form 966-E with respect to such liquidation, etc. The final regulations eliminate form 966-E. The information which would have been solicited on form 966-E is, and will continue to be, supplied with the organization's annual information return. A transitional rule is provided for organizations which did not provide the necessary information with their annual information returns filed before the publication of the regulations.

The final regulations also eliminate the requirement for providing such information by State credit unions and local organizations where the information is provided by a State regulatory agency or pursuant to the group exemption process and by certain organizations which were previously exempt from taxation under section 501(a).

The final regulations also adopt the regulations, as proposed, relating to the returns of certain trusts.

DRAFTING INFORMATION

The principal author of this regulation was Robert Katcher of the Legislation and Regulations Division of the Office of Chief Counsel, Internal Revenue Service. However, personnel from other offices of the Internal Revenue Service and Treasury Department participated in developing the regulation, both on matters of substance and style.

ADOPTION OF AMENDMENTS TO THE REGULATIONS

Accordingly (26 CFR Part 1 and 26 CFR Part 301) contained in the notice of proposed rulemaking are adopted as proposed, subject to the following changes:

Paragraphs 1, 3, 5, and 7 of the appendix to the notice of proposed rulemaking are deleted. Section 1.6043-3 as set forth in paragraph 4 of the appendix to the notice of proposed rulemaking is amended by revising paragraph (a) and redesignating it as (a)(1), adding new paragraph (a)(2), revising paragraphs (b) (3) and (4), adding new paragraphs (b) (5), (6), (7), and (8), deleting paragraphs (c) and (d), redesignating (e) and (f) as (c) and (d) and revising redesignated paragraph (c) and adding a new example (3) to redesignated paragraph (d)(1). These amended paragraphs read as follows:

§ 1.6043-3 *Return regarding liquidation, dissolution, termination, or substantial contraction of organizations exempt from taxation under section 501(a).*

(a) *In general*—(1) *Requirement to provide information.* Except as provided in paragraph (b) of this section, for taxable years beginning after December 31, 1969, every organization which for any of its last 5 taxable years preceding any liquidation, dissolution, termination, or substantial contraction of the organization was exempt from taxation under section 501(a) shall provide the information with respect to such liquidation, dissolution, termination, or substantial contraction, required by the instructions accompanying the organization's annual return of information. The information required by this section shall be provided with, and at the time prescribed for filing, the organization's annual return of information for the period during which any liquidation, dissolution (or the adoption of a resolution or plan for the dissolution or liquidation in whole or part), termination or substantial contraction occurred with respect to the organization. An organization which is no longer exempt from taxation under section 501(a) shall use the annual return of information it would have been required to file when the organization was exempt.

(2) *Transitional rule.* In the case of an annual return of information of an organization which was filed before September 11, 1978, if the organization had failed to provide the information with such return in accordance with paragraph (a)(1) of this section, the organization may comply with this section by providing the information with the organization's first annual return of information filed after such date.

(b) *Exceptions.* The following organizations are not required to provide the information under paragraph (a) of this section:

(1) Churches, their integrated auxiliaries, or conventions or associations of churches;

(2) Any organization which is not a private foundation (as defined in section 509(a)) and the gross receipts of which in each taxable year are normally not more than $5,000;

(3) Any organization which has terminated its private foundation status under section 507(b)(1)(B) with respect to a liquidation, dissolution, termination, or substantial contraction which is in connection with the termination under section 507(b)(1)(B);

(4) Any organization described in section 401(a) if the employer who established such organization files a return which provides the information under paragraph (a) of this section;

(5) Any organization described in section 501(c)(1) and any corporation described in section 501(c)(2) which holds title to property for such 501(c)(1) organizations;

(6) Any organization described in section 501(c)(14)(A) subject to a group exemption letter issued to a state regulatory body;

(7) Any subordinate unit of a central organization (other than a private foundation) which established its exempt status under the group ruling procedure of regulations § 601.201(n)(7), if the central or parent organization files an annual information return for the group in accordance with § 1.6033-2(d); and

(8) Any organization no longer exempt from taxation under section 501(a) and which during the period of its exemption under such section was neither described in section 501(c)(3) nor a corporation described in section 501(c)(2) which held title to property for an organization described in section 501(c)(3).

The Commissioner may relieve any organization or class of organizations from filing the return required by section 6043(b) of this section, where it is determined that such information is not necessary for the efficient administration of the internal revenue laws.

(c) *Penalties.* For provisions relating to the penalty provided for failure to furnish any information required by this section, see section 6652(d) and the regulations thereunder.

(d) *Definitions.* (1)(i) The term "substantial contraction", as used in this section, shall include any partial liquidation or any other significant disposition of assets, other than transfers for full and adequate consideration or distributions out of current income. For purposes of this subparagraph, the term "significant disposition of assets" shall not include any disposition for a taxable year where the aggregate of—

(A) The disposition for the taxable year and

(B) Where any disposition for the taxable year is part of a series of related dispositions made during prior taxable years, the total of the related dispositions made during such prior taxable years,

is less than 25 percent of the fair market value of the net assets of the organization at the beginning of the taxable year (in the case of (A) of this subdivision) or at the beginning of the first taxable year in which any of the series of related dispositions was made (in the case of (B) of this subdivision). A "significant disposition of assets" may result from the transfer of assets to a single organization or to several organizations, and it may occur in a single taxable year (as in (A) of this subdivision) or over the course of 2 or more taxable years (as in (B) of this subdivision). The determination whether a significant disposition has occurred through a series of related dispositions (within the meaning of (B) of this subdivision) will be determined from all the facts and circumstances of the particular case. Ordinarily, a distribution described in section 170(b)(1)(D)(ii) shall not be taken into account as a significant disposition of assets within the meaning of this subparagraph.

(ii) The provisions of this subparagraph may be illustrated by the following examples:

Example (1). M, an organization described in section 501(c)(4), is on the calendar year basis. It has net assets worth $100,000 as of January 1, 1971. In 1971, in addition to distributions out of current income, M transfers $10,000 to N, $10,000 to O, and $10,000 to P. Such dispositions to N, O, and P are not distributions described in section 170(b)(1)(E)(ii). N, O, and P are all organizations described in section 501(c)(4). Under subdivision (i)(A) of this subparagraph, M has made a significant disposition of its assets in 1971 since M has disposed of more than 25 percent of its net assets (with respect to the fair market value of such assets as of January 1, 1971). Thus, M is subject to the provisions of section 6043(b) and this section for the year 1971.

Example (2). U, a tax-exempt private foundation on the calendar year basis, has net assets worth $100,000 as of January 1, 1971. As part of a series of related dispositions in 1971 and 1972, U transfers in 1971, in addition to distributions out of current income, $10,000 to private foundation X and $10,000 to private foundation Y, and in 1972, in addition to distributions out of current income, U transfers $10,000 to private foundation Z. Such dispositions to X, Y, and Z are not distributions described in section 170(b)(1)(E)(ii). Under subdivision (i) of this subparagraph, U is treated as having made a series of related dispositions in 1971 and 1972. The aggregate of the 1972 disposition (under subdivision (i)(A) of this subparagraph) and the series of related dispositions (under subdivision (i)(B) of this subparagraph) is $30,000, which is more than 25 percent of the fair market value of U's net assets as of the beginning of 1971 ($100,000), the first year in which any such disposition was made. Thus, U has made a significant disposition of its assets and is subject to the provisions of section 6043(b) and this section for the year 1972.

Example (3). Assume in Example (1) that in 1973 M makes a $5,000 disposition related to the 1971 disposition. Under subdivision (i)(B) of this subparagraph M is treated as having made a series of related dispositions in 1971 and 1973. The aggregate of the 1971 disposition under subdivision (i)(A) of this subparagraph and the 1973 related disposition under subdivision (i)(B) of this subparagraph is $35,000, which is more than 25 percent of the fair market value of M's net assets as of the beginning of 1971, the first year in which any disposition was made. Thus M has made a significant disposition of its assets and is subject to the provisions of section 6043(b) and this section for the year 1973.

(2) For the definition of the term "normally" as used in paragraph (b)(2) of this section, see § 1.6033-2(g)(3).

(3) For examples of the term "integrated auxiliaries" as used in paragraph (b)(1) of this section, see § 1.6033-2(g)(1)(i)(A).

(Sec. 7805, Internal Revenue Code of 1954 (68A Stat. 917; (26 U.S.C. 7805)).)

WILLIAM E. WILLIAMS,
Acting Commissioner of Internal Revenue.

Approved: August 15, 1978.

DONALD C. LUBICK,
Assistant Secretary of the Treasury.

PAR. 2. Section 1.6034-1 is amended by revising so much thereof that precedes paragraph (a)(2) and by revising paragraphs (c) and (d). These amended provisions read as follows:

§ 1.6034-1 Information returns required of trusts described in section 4947(a) or claiming charitable or other deductions under section 642(c).

(a) *In general.* Every trust (other than a trust described in paragraph (b) of this section) claiming a charitable or other deduction under section 642(c) for the taxable year shall file, with respect to such taxable year, a return of information on form 1041-A. In addition, for taxable years beginning after December 31, 1969, every trust (other than a trust described in paragraph (b) of this section) described in section 4947(a) (including trusts described in section 664) shall file such return for each taxable year, unless (with respect to a trust described in section 4947(a)(2)) all transfers in trust occurred before May 27, 1969. The return shall set forth the name and address of the trust and the following information concerning the trust in such detail as is prescribed by the form or in the instructions issued with respect to such form:

(1) The amount of the charitable or other deduction taken under section 642(c) for the taxable year (and, for taxable years beginning prior to January 1, 1970, showing separately for each class of activity for which disbursements were made (or amounts were permanently set aside) the amounts which, during such year, were paid out (or which were permanently set aside) for charitable or other purposes under section 642(c));

* * * * *

(c) *Time and place for filing return.* The return on form 1041-A shall be filed on or before the 15th day of the 4th month following the close of the taxable year of the trust, with the internal revenue officer designated by the instructions applicable to such form. For extensions of time for filing returns under this section, see § 1.6081-1.

(d) *Other provisions.* For publicity of information on Form 1041-A, see section 6104 and the regulations thereunder in part 301 of this chapter. For provisions relating to penalties for failure to file a return required by this section, see section 6652(d). For the criminal penalties for a willful failure to file a return and filing a false or fraudulent return, see sections 7203, 7206, and 7207.

§ 1.6043-3 Return regarding liquidation, dissolution, termination, or substantial contraction of organizations exempt from taxation under section 501(a).

(a) *In general*—(1) *Requirement to provide information.* Except as provided in paragraph (b) of this section, for taxable years beginning after December 31, 1969, every organization which for any of its last 5 taxable years preceding any liquidation, dissolution, termination, or substantial contraction of the organization was exempt from taxation under section 501(a) shall provide the information with respect to such liquidation, dissolution, termination, or substantial contraction required by the instructions accompanying the organization's annual return of information. The information required by this section shall be provided with, and at the time prescribed for filing, the organization's annual return of information for the period during which any liquidation, dissolution (or the adoption of a resolution or plan for the dissolution or liquidation in whole or part), termination or substantial contraction occurred with respect to the organization. An organization which is no longer exempt from taxation under section 501(a) shall use the annual return of information it would have been required to file when the organization was exempt.

(2) *Transitional rule.* In the case of an annual return of information of an organization which was filed before September 11, 1978, if the organization had failed to provide the information with such return in accordance with paragraph (a)(1) of this section, the organization may comply with this section by providing the information with the organization's first annual return of information filed after such date.

(b) *Exceptions.* The following organizations are not required to provide the information under paragraph (a) of this section:

(1) Churches, their integrated auxiliaries, or conventions or associations of churches;

(2) Any organization which is not a private foundation (as defined in section 509(a)) and the gross receipts of which in each taxable year are normally not more than $5,000;

(3) Any organization which has terminated its private foundation status under section 507(b)(1)(B) with respect to a liquidation, dissolution, termination, or substantial contraction which is in connection with the termination under section 507(b)(1)(B);

(4) Any organization described in section 401(a) if the employer who established such organization files a return which provides the information under paragraph (a) of this section;

(5) Any organization described in section 501(c)(1) and any corporation described in section 501(c)(2) which holds title to property for such 501(c)(1) organizations;

(6) Any organization described in section 501(c)(14)(A) subject to a group exemption letter issued to a state regulatory body; and

(7) Any subordinate unit of a central organization (other than a private foundation) which established its exempt status under the group ruling procedure of regulations § 601.201 (n)(7), if the central or parent organization files an annual information return for the group in accordance with § 1.6033-2(d); and

(8) Any organization no longer exempt from taxation under section 501(a) and which during the period of its exemption under such section was neither described in section 501(c)(3)

nor a corporation described in section 501(c)(2) which held title to property for an organization described in section 501(c)(3).

The Commissioner may relieve any organization or class or organizations from filing the return required by section 6043(b) of this section, where it is determined that such information is not necessary for the efficient administration of the internal revenue laws.

(c) *Penalties.* For provisions relating to the penalty provided for failure to furnish any information required by this section, see section 6652(d) and the regulations thereunder.

(d) *Definitions.* (1)(i) The term "substantial contraction", as used in this section, shall include any partial liquidation or any other significant disposition of assets, other than transfers for full and adequate consideration or distributions out of current income. For purposes of this subparagraph, the term "significant disposition of assets" shall not include any disposition for a taxable year where the aggregate of—

(A) The dispositions for the taxable year and

(B) Where any disposition for the taxable year is part of a series of related dispositions made during such prior taxable years, the total of the related dispositions made during prior taxable years, is less than 25 percent of the fair market value of the net assets of the organization at the beginning of the taxable year (in the case of (A) of this subdivision) or at the beginning of the first taxable year in which any of the series of related dispositions was made (in the case of (B) of this subdivision). A "significant disposition of assets" may result from the transfer of assets to a single organization or to several organizations, and it may occur in a single taxable year (as in (A) of this subdivision) or over the course of two or more taxable years (as in (B) of this subdivision). The determination whether a significant disposition has occurred through a series of related dispositions (within the meaning of (B) of this subdivision) will be determined from all the facts and circumstances of the particular case. Ordinarily, a distribution described in section 170(b)(1)(D)(ii) shall not be taken into account as a significant disposition of assets within the meaning of this subparagraph.

(ii) The provisions of this subparagraph may be illustrated by the following examples:

Example (1). M, an organization described is section 501(c)(4), is on the calendar year basis. It has net assets worth $100,000 as of January 1, 1971. In 1971, in addition to distributions out of current income, M transfers $10,000 to N, $10,000 to O, and $10,000 to P. Such dispositions to N, O, and P are not distributions described in section 170(b)(1)(E)(ii). N, O, and P are all organizations described in section 501(c)(4). Under subdivision (i)(*a*) of this subparagraph, M has made a significant disposition of its assets in 1971 since M has disposed of more than 25 percent of its net assets (with respect to the fair market value of such assets as of January 1, 1971). Thus, M is subject to the provisions of section 6043(b) and this section for the year 1971.

Example (2). U, a tax-exempt private foundation on the calendar year basis, has net assets worth $100,000 as of January 1, 1971. As part of a series of related dispositions in 1971 and 1972, U transfers in 1971, in addition to distributions out of current income, $10,000 to private foundation X and $10,000 to private foundation Y, and in 1972, in addition to distributions out of current income, U transfers $10,000 to private foundation Z. Such dispositions to X, Y, and Z are not distributions described in section 170(b)(1)(E)(ii). Under subdivision (i) of this subparagraph, U is treated as having made a series of related dispositions in 1971 and 1972. The aggregate of the 1972 disposition (under subdivision (i)(*a*) of this subparagraph) and the series of related dispositions (under subdivision (i)(*b*) of this subparagraph) is $30,000, which is more than 25 percent of the fair market value of U's net assets as of the beginning of 1971 ($100,000), the first year in which any such disposition was made. Thus, U has made a significant disposition of its assets and is subject to the provisions of section 6043(b) and this section for the year 1972.

Example (3). Assume in Example (1) that in 1973 M makes a $5,000 disposition related to the 1971 disposition. Under subdivision (i)(B) of this subparagraph M is treated as having made a series of related dispositions in 1971 and 1973. The aggregate of the 1971 disposition under subdivision (i)(A) of this subparagraph and the 1973 related disposition under subdivision (i)(B) of this subparagraph is $35,000, which is more than 25 percent of the fair market value of M's net assets as of the beginning of 1971, the first year in which any disposition was made. Thus M has made a significant disposition of its assets and is subject to the provisions of section 6043(b) and this section for the year 1973.

(2) For the definition of the term "normally" as used in paragraph (b)(2) of this section, see §1.6033-2(g)(3).

(3) For examples of the term "integrated auxiliaries" as used in paragraph (b)(1) of this section, see § 1.6033-2(g)(1)(i)(*a*)

PAR. 6. Section 301.6034-1 is amended to read as follows:

§ 301.6034-1 Returns by trusts described in section 4947(a) or claiming charitable or other deductions under section 642(c).

For provisions relating to the requirement of returns by trusts described in section 4947(a) or claiming charitable or other deductions under section 642(c), see § 1.6034-1 of this chapter (Income Tax Regulations).

PAR. 8. Section 301.6043-1 is amended to read as follows:

§ 301.6043-1 Returns regarding liquidation, dissolution, termination, or contraction.

For provisions relating to the requirement of returns of information regarding liquidations, dissolutions, terminations, or contractions, see §§ 1.6043-1, 1.6043-2, and 1.6043-3 of this chapter (Income Tax Regulations).

[FR Doc. 78-25348 Filed 9-8-78; 8:45 am]

[6570-06]

Title 29—Labor

CHAPTER XIV—EQUAL EMPLOYMENT OPPORTUNITY COMMISSION

PART 1610—FREEDOM OF INFORMATION ACT

Schedule of Fees

AGENCY: Equal Employment Opportunity Commission.

ACTION: Final rule.

SUMMARY: The purpose of amending the Commission's regulations on the availability of records is to update its schedule of fees for the search and duplication of records so that the schedule will reflect increases in the direct costs incurred by the Commission in responding to requests for records. The amendment also adds a fee for searches requiring the services of a professional employee and eliminates that portion of the present schedule which authorizes the Commission to charge the hourly fee for searches which take only a fraction of an hour to perform.

EFFECTIVE DATE: September 11, 1978.

FOR FURTHER INFORMATION CONTACT:

Constance L. Dupre, associate General counsel, Legal Counsel Division, Office of General Counsel, Equal Employment Opportunity Commission, 2401 E Street NW., Washington, D.C. 20506, 202-634-6595.

SUPPLEMENTARY INFORMATION: At 43 FR 26454 (June 20, 1978) the Commission published notice that it proposed to amend its regulations on the availability of records, 29 CFR Part 1610. The notice also indicated that comments from the public on the proposed amendment had to be received by July 15, 1978, and that the proposed amendment would be implemented by August 15, 1978. The Commission did not receive any comments from the public. The proposed amendment to the Commission's regulations on the availability of records has, therefore, been adopted by the Commission without change.

As indicated in the notice of June 20, 1978, the amended provision is 29 CFR 1610.15(a). This provision contains a schedule of fees utilized by the Com-

mission for purposes of assessing costs to individuals who seek access to records under the Freedom of Information Act, 5 U.S.C. 552. The present fee schedule has become outdated since it does not reflect increases in direct costs to the Commission for the search for and duplication of records requested.

The higher costs are attributable to increases in the salaries of personnel required to search for and duplicate records. The higher costs also stem from increases in direct costs involved in maintenance and supplies for the operation of machines used to reproduce records. Additionally, the fee schedule is being amended by adding a professional search fee to cover the direct costs incurred by the Commission whenever a search calls for the services of a professional employee.

Finally, the fee schedule is being amended so that search costs will be levied only to the extent incurred. The current schedule provides for a specific fee per hour or any fraction thereof.

In view of the foregoing, the amendment of part 1610 (§ 1610.15(a)) of chapter XIV, title 29 of the Code of Federal Regulations is hereby revised as set forth below and is effective September 11, 1978.

This 6th day of September 1978.

For the Commission.

ELEANOR HOLMES NORTON,
Chair.

Section 1610.15(a) is revised to read as follows:

§ 1610.15 Schedule of fees and method of payment for services rendered.

(a) Except as otherwise provided, the following specific fees shall be applicable with respect to services rendered to members of the public under this subpart:

(1) For actual search time by clerical personnel—at the rate of $5 per hour.

(2) For actual search time by professional personnel—at the rate of $10 per hour.

(3) For copies made by photocopying machine—$0.15 per page (maximum of 10 copies).

(4) For attestation of each record as a true copy—$0.75 per document.

(5) For certification of each record as a true copy, under the seal of the agency—$1.

(6) For each signed statement of negative result of search for record—$1.

(7) All other direct costs of search or duplication shall be charged to the requester in the same amount as incurred by the agency.

[FR Doc. 78-25452 Filed 9-8-78; 8:45 am]

[4810-28]

Title 31—Money and Finance: Treasury

CHAPTER I—MONETARY OFFICES: DEPARTMENT OF THE TREASURY

PART 51—FISCAL ASSISTANCE TO STATE AND LOCAL GOVERNMENTS

Uniform Guidelines on Employee Selection Procedures (1978); Interim Regulation

AGENCY: Office of Revenue Sharing, Treasury Department.

ACTION: Interim regulation.

SUMMARY: The interim regulations adopt the Uniform Guidelines on Employee Selection Procedures, as adopted by the Equal Employment Opportunity Commission, the Civil Service Commission, the Department of Justice and the Department of Labor. Those four agencies published the guidelines in final form on August 25, 1978 (43 FR 38290). The purpose of the regulation is to promote uniformity in the enforcement of Federal equal employment opportunity laws.

EFFECTIVE DATE: September 11, 1978.

ADDRESS: A copy of the guidelines is filed with the Office of the Federal Register as part of the original document. Copies are available upon written request from Chief Counsel, Office of Revenue Sharing, 2401 E Street NW., Washington, D.C. 20226.

FOR FURTHER INFORMATION CONTACT:

Herman Schwartz, telephone 202-634-5182.

SUPPLEMENTARY INFORMATION: The Department of the Treasury agrees with the position of the Equal Employment Opportunity Commission, the Department of Justice, the Civil Service Commission and the Department of Labor, that the Federal Government should speak with one voice on the important subject of equal employment opportunity.

For that reason, the Treasury Department published notice of intent to adopt the Uniform Guidelines on Employee Selection Procedures (43 FR 9322, Mar. 7, 1978). No comments were received on the proposed rule which is therefore published in interim form to take effect immediately pending revision and publication of the final nondiscrimination regulations.

Pursuant to the authority contained in the State and Local Fiscal Assistance Act of 1972 (title I of Pub. L. 92-512), as amended by the State and local fiscal assistance amendments of 1976 (Pub. L. 94-488, 31 U.S.C. 1221, et seq.) and Treasury Department Order No. 224, dated January 26, 1973 (38 FR 3342) as amended by Treasury Department Order No. 242 (Revision No. 1) dated May 17, 1977, the Department of the Treasury amends 31 CFR part 51, subpart E § 51.53(b) by revising paragraph (b) and adding as appendix A to Part 51, Uniform Guidelines on Employee Selection Procedures (1978).

RODNEY SCRIBNER,
Deputy Director,
Office of Revenue Sharing.

Approved: September 6, 1978.

ROGER C. ALTMAN,
Assistant Secretary.

1. 31 CFR part 51 is amended by revising § 51.53(b) to read as follows:

§ 51.53 Employment discrimination.

* * * * *

(b) Employee selection procedures.

The Equal Employment Opportunity Commission, the Civil Service Commission, the Department of Justice and the Department of Labor in carrying out their responsibilities in insuring compliance with Federal equal employment opportunity law, have promulgated Uniform Guidelines on Employee Selection Procedures to assist in establishing and maintaining equal employment opportunities; 29 CFR part 1607; 5 CFR 300.103(c); 990-1 (book 3) of the Federal Personnel Manual; 28 CFR 50.14, and 41 CFR 60.3. The Uniform Guidelines on Employee Selection procedures appear as appendix A to this part. Among other things, these guidelines recognize the unlawfulness of the use of any employee selection procedures (including tests and minimum education levels) which disqualify a disproportionate number of persons on grounds of race, color, religion, sex, or national origin and which have not been properly validated or otherwise justified in accordance with Federal law. Recipient governments may not use a selection procedure that is inconsistent with the Uniform Guidelines on Employee Selection Procedures.

* * * * *

2. Part 51 is further amended by adding appendix A—Uniform Guidelines on Employee Selection Procedures (1978) as adopted at 43 FR 38290, August 25, 1978.

[FR Doc. 78-25592 Filed 9-8-78; 8:45 am]

[4910-14]

Title 33—Navigation and Navigable Waters

CHAPTER I—COAST GUARD, DEPARTMENT OF TRANSPORTATION

[CGD 78-051]

PART 3—COAST GUARD AREAS, DISTRICTS, MARINE INSPECTION ZONES, AND CAPTAIN OF THE PORT AREAS

COTP Houston; editorial change

AGENCY: Coast Guard, DOT.

ACTION: Final rule.

SUMMARY: The office of the Captain of the Port, Houston, Tex. is erroneously listed as being located in Galena Park, Tex. A Galena Park mailing address is maintained merely to utilize the services of a nearby post office. The office of the Captain of the Port, Houston, Tex., is physically located within the city limits of Houston, and that is reflected by this amendment. This action should eliminate any confusion or misunderstanding as to the location of the Houston Captain of the Port Office.

EFFECTIVE DATE: This amendment is effective on September 11, 1978.

FOR FURTHER INFORMATION CONTACT:

Ens. George W. Molessa, Jr. (G-WLE-4/73), Room 7315, Department of Transportation, Nassif Building, Washington, D.C. 20590, 202-426-4958.

SUPPLEMENTARY INFORMATION: Since this amendment is related to agency organization, it is exempt from the notice of proposed rulemaking requirements by 5 U.S.C. 553(b). Since this amendment is not substantive, it may be made effective in less than 30 days after publication in the FEDERAL REGISTER.

The Coast Guard has evaluated this final rule under the Department of Transportation Policies for Improving Government Regulations published on March 8, 1978 (43 FR 9582). Since this rule amounts to an editorial change, no economic impact is anticipated. The final economic evaluation is available at the above address.

DRAFTING INFORMATION

The principal persons involved in the drafting of this rule are: Ens. George W. Molessa, Jr., Project Manager, Office of Marine Environment and Systems, and Lt. G. S. Karavitis, Project Attorney, Office of Chief Counsel.

In consideration of the foregoing, Part 3 of Chapter I, Title 33 of the Code of Federal Regulations is amended as follows:

1. Section 3.40-25 is amended to read as follows:

§ 3.40-25 Houston Marine Inspection Zone and Captain of the Port Area.

(a) The Houston Marine Inspection Office and the Houston Captain of the Port Office are located in Houston, Tex.

* * * * *

(5 U.S.C. 552; 14 U.S.C. 633)

NOTE.—The Coast Guard has determined that this document does not contain a major proposal requiring preparation of an Economic Impact Statement under Executive Order 11821, as amended, and OMB Circular A-107.

Dated: August 31, 1978.

R. H. SCARBOROUGH,
Vice Admiral, U.S. Coast Guard, Acting Commandant.

[FR Doc. 78-25286 Filed 9-8-78; 8:45 am]

[4910-14]

[CGD 78-040b]

PART 161—VESSEL TRAFFIC MANAGEMENT

Puget Sound

NOTE: This document originally appeared in the FEDERAL REGISTER for Friday, September 8, 1978. It is reprinted in this issue to meet requirements for publication on an assigned day of the week. (See OFR notice 41 FR 32914, Aug. 6, 1976.)

AGENCY: Coast Guard, DOT.

ACTION: Extension of interim navigation rule.

SUMMARY: This amendment extends the Puget Sound interim navigation rule. The interim rule was issued on March 14, 1978, as a temporary emergency measure for 180 days pending Coast Guard rulemaking governing tanker operations in Puget Sound and surrounding waters. This amendment is necessary in order to keep the interim rule in effect until completion of the Coast Guard rulemaking proceeding.

EFFECTIVE DATE: This amendment is effective August 31, 1978.

FOR FURTHER INFORMATION CONTACT:

Lieutenant Commander James. L. MacDonald, Office of Marine Environment and Systems (G-WLE/73), Room 7315, Department of Transportation, Nassif Building, 400 Seventh Street SW., Washington, D.C. 20590, 202-426-1934.

SUPPLEMENTARY INFORMATION: An opportunity to comment on the extension as a proposed rule has not been provided. A determination has been made that to provide notice and public comment would be both impracticable and contrary to the public interest. The term of the extension was not decided until the Coast Guard was able to assess how much time was needed to complete the rulemaking process. Once the decision was made, there was not sufficient time to allow an opportunity to comment on the extension. Similarly, a determination has been made that good cause exists not to delay its effective date. Following either of these procedures would have caused the interim rule to lapse for a period of time after the end of its current 6-month term, and this circumstance would have thwarted the purpose of the interim navigation rule.

DRAFTING INFORMATION

The principal persons involved in drafting this amendment are Lt. Comdr. James L. MacDonald, Project Manager, Office of Marine Environment and Systems, U.S. Coast Guard, and Mr. Edward Gill and Mr. William Register, Project Attorneys, Office of the Chief Counsel, U.S. Coast Guard.

DISCUSSION AND BACKGROUND

On March 2, 1978, the U.S. Supreme Court, in the case of *Ray* v. *Atlantic Richfield Co., Inc.*, 46 U.S.L.W. 4200 (1978), declared portions of the State of Washington tanker law invalid based on constitutional grounds involving Federal preemption of State law. Part of the State law declared invalid was a provision banning tankers of over 125,000 deadweight tons in Puget Sound. An interim navigation rule prohibiting entry of oil tankers in excess of 125,000 deadweight tons into the U.S. waters of Puget Sound east of Discovery Island Light and New Dungeness Light was issued by the Secretary of Transporation on March 14, 1978 (43 FR 12257, March 23, 1978). The interim rule was to remain in effect until September 9, 1978. The rule was issued, pending possible preparation of additional navigation regulations, in order to provide a continuing scheme for controlling vessel operation in Puget Sound and to avert a reduction in environmental protection. The interim rule was based on the State provision. The Federal regulatory scheme, in conjunction with the State statute, while it remained valid, provided for protection of the waters of the Puget Sound area and its resources from environmental harm. The concern that invalidation of the State statute could diminish the effectiveness of the existing scheme for controlling vessel operation (and, thus, cause a reduction in environmental protection in Puget Sound) necessitat-

ed the taking of temporary action to avert this possibility.

When the interim navigation rule was issued, comments were requested on its contents to determine whether the rule should be modified or supplemented. Approximately 90 comments were received, most of which were in favor of the rule. A petition for rulemaking raising various legal questions concerning the interim navigation rule was also received. The petition was denied and copies of the action taken on the petition have been placed in the Coast Guard rulemaking dockets on the interim rule.

The Coast Guard was directed to institute rulemaking proceedings while the interim navigation rule remained in effect. The Coast Guard issued an Advanced Notice of Proposed Rulemaking (ANPRM) on March 22, 1978 (43 FR 12840, March 27, 1978), seeking public input concerning regulations governing the operation of tank vessels in the Puget Sound area. The Coast Guard set out several possible regulatory approaches and requested comments concerning these approaches, or any others that would provide an equivalent level of safety and environmental protection. Interested persons were given until May 12, 1978, to submit comments. Public hearings were held on April 20 and 21, 1978 in Seattle, Wash.

The Coast Guard is presently analyzing the comments received concerning the ANPRM and the interim rule. In conjunction with the analysis of the comments, the Coast Guard is conducting simulator tests and actual tests using tank vessels in order to determine a suitable regulatory approach. Additionally, a draft environmental impact statement (EIS) is being prepared. Due to the time required to prepare and publish the EIS for public comment, as well as the complexity of issues and the volume of comments received, it is expected that the Coast Guard rulemaking proceeding will not be completed until June 1979. An extension of the interim navigation rule is necessary to maintain the current *de facto* level of protection of the navigable waters of Puget Sound pending completion of the Coast Guard rulemaking proceeding. Thus, the interim navigation rule is extended until June 30, 1979, so that the Coast Guard may have adequate time to complete the rulemaking process.

Accordingly, paragraph (c) of Appendix A to Part 161 of Title 33 of the Code of Federal Regulations is amended to read as follows:

APPENDIX A—PUGET SOUND INTERIM NAVIGATION RULE

* * * * *

(c) This rule is effective immediately and shall remain in effect until June 30, 1979.

(33 U.S.C. 1224)

Dated: August 31, 1978.

BROCK ADAMS,
Secretary of Transportation.

[FR Doc. 78-25288 Filed 9-7-78; 8:45 am]

[1410-1]

Title 37—Patents, Trademarks, and Copyrights

CHAPTER III—COPYRIGHT ROYALTY TRIBUNAL

PART 302—FILING OF CLAIMS TO CABLE ROYALTY FEES, PROOF OF FIXATION

Rule With Respect to Proof of Fixation of Copyright Works

AGENCY: Copyright Royalty Tribunal (CRT).

ACTION: Final rule.

SUMMARY: Copyright Royalty Tribunal adopts rule establishing the policy and procedures of the Copyright Royalty Tribunal concerning the submission to the Tribunal during proceedings for the distribution of cable royalty fees of evidence of the fixation of works in a tangible medium as required by section 102(a) of the Copyright Act. Under the rule, the filing of tangible fixations would not be required, and controversies concerning the fixation of works would be resolved on the basis of other appropriate evidence. It is necessary that the rule be adopted so that claimants to cable royalty fees will have timely knowledge of the evidence of fixation that may be required by the Tribunal.

EFFECTIVE DATE: October 10, 1978.

FOR FURTHER INFORMATION CONTACT:

Thomas C. Brennan, Chairman, Copyright Royalty Tribunal, 202-653-5175.

SUPPLEMENTARY INFORMATION: Section 111(d)(5) of the act for general revision of the copyright law directs the CRT to provide for the distribution of cable royalty fees, and to resolve controversies concerning the distribution of such fees among copyright owner claimants. Section 102(a) establishes as one of the conditions of copyright protection that a work be fixed in a tangible medium of expression.

Shortly after the constitution of the CRT, the agency was requested to establish a policy concerning the evidence that may be required to resolve disputes as to whether a particular work which is the subject of a claim was fixed in a tangible medium. In an advisory letter of January 31, 1978, the CRT stated that participation in the royalty distribution proceedings does not require copyright owners to preserve and submit to the CRT simultaneous fixations of live transmissions. Subsequently in the FEDERAL REGISTER of May 5, 1978 (43 FR 19424), in connection with the publication of the proposed rule as to the filing of claims to cable fees, the CRT invited comments as to "what proof of fixation other than the actual video tape or film, should be required in a royalty distribution proceeding."

After considering the comments submitted, the CRT published a proposed rule in the FEDERAL REGISTER of July 28, 1978 (43 FR 32825). Since the proposed rule generally reflected the recommendations made in the comments submitted pursuant to the advance notice, no new issues were raised in the comments on the proposed rule.

The proposed rule has been adopted with a minor amendment. The proposed rule did not provide any guidance concerning the individuals who would be expected in the event of a controversy to prepare and sign the affidavits submitted by claimants. The rule as adopted provides that the affidavits should be "by appropriate operational personnel." The CRT regards the procedures described in the comments of the Commissioner of Baseball as an example of suitable procedures to establish proof of fixation of copyrighted works.

Accordingly, pursuant to 17 U.S.C. 111(d)(5)(A), 37 CFR, chapter III, Part 302 is amended by adding a new § 302.9, as follows:

§ 302.9 Proof of fixation of works.

The Copyright Royalty Tribunal shall not require in any proceeding for the distribution of cable royalty fees the filing by claimants of tangible fixations of works in whole or in part. In the event of a controversy concerning the actual fixation of a work in a tangible medium as required by the Copyright Act, the Copyright Royalty Tribunal shall resolve such controversy for purposes of the distribution proceeding solely on the basis of affidavits by appropriate operational personnel and other appropriate documentary evidence, and such oral testimony as the Copyright Royalty Tribunal may deem necessary. Affidavits submitted by claimants should establish that the work for which the claim is submitted was fixed in its entirety, and should state the nature of the work, the title of the program, the duration of the program, and the date of fixation. No such affidavits need be filed with the Copyright Royalty Tri-

bunal unless requested by the Tribunal.

Approved: September 6, 1978.

THOMAS C. BRENNAN,
Chairman,
Copyright Royalty Tribunal.

[FR Doc. 78-25558 Filed 9-8-78; 8:45 am]

[6560-01]

Title 40—Protection of Environment

CHAPTER I—ENVIRONMENTAL PROTECTION AGENCY

[FRL 950-8]

PART 65—AIR QUALITY IMPLEMENTATION PLANS; ENFORCEMENT BY STATE AND FEDERAL GOVERNMENTS AFTER STATUTORY DEADLINES

Delayed Compliance Orders for Ten Facilities of the Ohio Department of Mental Health and Mental Retardation

AGENCY: Environmental Protection Agency.

ACTION: Final rule.

SUMMARY: By this rule, the Administrator of EPA issues delayed compliance Orders to ten (10) facilities of the Ohio Department of Mental Health and Mental Retardation. The Orders require the facilities to bring air emissions from their boiler houses at various locations throughout the State of Ohio into compliance with Regulation AP-3-11, a part of the federally approved Ohio State Implementation Plan. Compliance with the Orders by the facilities will preclude suits under the Federal enforcement and citizen suit provisions of the Clean Air Act for violations of the SIP regulation covered by the Order.

DATES: This rule takes effect on September 11, 1978.

ADDRESSES: Comments received in response to the April 17 and June 8, 1978, FEDERAL REGISTER notices proposing issuance of the delayed compliance Orders to the facilities are available for public inspection and copying during normal business hours at the above address.

FOR FURTHER INFORMATION CONTACT:

Michael G. Smith, Enforcement Attorney, Region V, U.S. Environmental Protection Agency, 230 South Dearborn Street, Chicago, Ill. 60604, telephone 312-353-2082.

SUPPLEMENTARY INFORMATION: On April 17, 1978. the Acting Regional Administrator for Region V published in the FEDERAL REGISTER (43 FR 16195) a notice setting out the provisions of proposed delayed compliance Orders for nine of these facilities. On June 8, 1978, a similar notice was published at 43 FR 24858 which set out the provisions of a proposed delayed compliance Order for Massillon State Hospital. These notices asked for public comments and offered the opportunity to request a public hearing on the proposed Orders. On May 11, 1978, the Northwestern Ohio Lung Association submitted a comment which indicated support for the content of the Orders which were published on April 17, 1978, and inquired regarding the obligation of a subject source to submit evidence of continued compliance (i.e., monitoring data). This inquiry was answered by means of return correspondence and did not necessitate any revision of the proposed Orders. No comments were received concerning the June 8, 1978, publication of the Massillon State Hospital proposed Order.

Therefore, delayed compliance Orders effective this date are issued to the following facilities by the Administrator of EPA pursuant to the authority of section 113(d)(1) of the Clean Air Act, 42 U.S.C. 7413(d)(1). The Orders place the facilities on a schedule to bring their coal-fired boiler houses into compliance as expeditiously as practicable with Ohio Implementation Plan Regulation AP-3-11. The facilities are unable to immediately comply with this regulation. The Orders also impose interim requirements which meet sections 113(d)(1)(C) and 113(d)(7) of the Act, and emission monitoring and reporting requirements. If the conditions of the Orders are met, it will permit the Ohio facilities to delay compliance with the Ohio Plan Regulation AP-3-11 until the dates set out below.

Compliance with the Orders by the facilities will preclude Federal enforcement action under section 113 of the Act for violation of Regulation AP-3-11. Citizen suits initiated under section 304 of the Act to enforce against the sources, are similarly precluded. Enforcement may be initiated, however, for violations of the terms of the Orders, and for violations of the regulation covered by the Orders which occurred before the Orders were issued by EPA or after the Orders are terminated. If the Administrator determines that any facility is in violation of a requirement contained in the orders, one or more of the actions required by section 113(d)(9) of the Act will be initiated. Publication of this notice of final rulemaking constitutes final Agency action for the purposes of judicial review under section 307(d) of the Act.

The provisions of the Orders will be summarized, as set forth below, in 40 CFR Part 65. The provisions of 40 CFR Part 65 will be promulgated by EPA soon, and will contain the procedure for EPA's issuance, approval, and disapproval of an Order under section 113(d) of the Act. In addition, Part 65 will contain sections summarizing Orders issued, approved, and disapproved by EPA. A prior notice proposing rgulations for Part 65, published at 40 FR 149876 (April 2, 1975), will be withdrawn, and replaced by a notice promulgating these new regulations.

EPA has determined that the Orders shall be effective upon publication of this notice because of the need to immediately place the facilities on schedules for compliance with the Ohio State Implementation Plan.

(42 U.S.C. 7413(d), 7601)

Dated: August 21, 1978.

DOUGLAS M. COSTLE,
Administrator.

In consideration of the foregoing, Chapter I of Title 40 of the Code of Federal Regulations, is amended as follows:

1. By adding § 65.400 to read as follows:

Subpart KK—Ohio

§ 65.400 Federal delayed compliance Orders issued under section 113(d) (1), (3), and (4) of the Act.

The delayed compliance Orders referenced below have been issued by the Administrator in accordance with section 113(d) of the Act and with this Part. With regard to each Order, the Administrator has made all the determinations and findings which are necessary for issuance of the Orders under section 113(d) of the Act.

Source	Location	Order No.	Date of FR proposal	SIP regulation involved	Final compliance date
Apple Creek State Institute.	Apple Creek, Ohio.	EPA-5-78-A-9	Apr. 17, 1978.	AP-3-11	June 1, 1979.
Athens Mental Health Center.	Athens, Ohio	EPA-5-78-A-10	do	AP-3-11	July 1, 1979.
Cambridge Mental Health and Mental Retardation Center.	Cambridge, Ohio.	EPA-5-78-A-11	do	AP-3-11	Do.
Columbus State Institute.	Columbus, Ohio.	EPA-5-78-A-12	do	AP-3-11	Do.
Gallipolis State Institute	Gallipolis, Ohio.	EPA-5-78-A-13	do	AP-3-11	Do.

Source	Location	Order No.	Date of FR proposal	SIP regulation involved	Final compliance date
Massillon State Hospital.	Massillon, Ohio.	EPA-5-78-A-14	June 8, 1978	AP-3-11	Do.
Mt. Vernon State Institute.	Mt. Vernon, Ohio.	EPA-5-78-A-15	Apr. 17, 1978	AP-3-11	May 1, 1979.
Orient State Institute	Orient, Ohio.	EPA-5-78-A-16	do	AP-3-11	July 1, 1979.
Tiffin Mental Health and Mental Retardation Center.	Tiffin, Ohio	EPA-5-78-A-17	do	AP-3-11	May 1, 1979.
Toledo Mental Health Center.	Toledo, Ohio.	EPA-5-78-A-18	do	AP-3-11	July 1, 1979.

[FR Doc. 78-25183 Filed 9-8-78; 8:45 am]

[6820-23]

Title 41—Public Contracts and Property Management

CHAPTER 5B—PUBLIC BUILDINGS SERVICE, GENERAL SERVICES ADMINISTRATION

[PBS P 2800.6A CHGE 3]

PART 5B-2—PROCUREMENT BY FORMAL ADVERTISING

Listing of Subcontractors

AGENCY: General Services Administration, Public Buildings Service.

ACTION: Final rule.

SUMMARY: The General Services Administration, Public Buildings Service, is amending its regulation concerning the listing of subcontractors for bid on construction contracts to increase the dollar threshold by making it applicable to all construction contracts exceeding $1 million, to require only those first tier subcontractors who will perform onsite work to be named in the bid, and provide that contractors shall require subcontractors to actually perform a specified percentage of the onsite work of the categories for which they are listed in the bid. This change is being made to reduce the large number of bidding problems and protests directly related to the listing of subcontractors requirement and to limit the listing of subcontractors provisions to the larger dollar contracts which offer substantial subcontracting opportunities. The intent of this change is to make it easier for contractors to develop bids in which subcontractors are to be named and to save money by reducing the number of bidding problems and bid protests which have adversely affected the General Services Administration, Public Buildings Service construction program.

EFFECTIVE DATE: October 1, 1978.

FOR FURTHER INFORMATION CONTACT:

Mr. Anthony Ratkus, Jr., of the Procurement Policy Review Staff, Office of Program Management, Public Buildings Service, General Services Administration, Washington, D.C. 20405, 202-566-1954.

Section 5B-2.202-70 is revised to read as follows:

§ 5B-2.202-70 Listing of Subcontractors.

(a) Except as otherwise provided in subparagraphs (b) and (c) of this subsection, invitations for bids for new construction and repair and alteration contracts shall require the bidder to name the subcontractors with whom the bidder proposes to subcontract for performance of onsite work of the categories set forth in the supplement to bid form, list of subcontractors (see § 5B-2.202-70(h)), or to enter the bidder's own name to indicate work that will not be subcontracted. For each project, the contracting officer shall determine the categories of the specified work for which the names are to be submitted, based on the following criteria:

(1) The listing shall include all heating, ventilating, and air-conditioning (HVAC), electrical; and vertical transportation categories without regard to estimated value.

(2) In addition, the listing shall include all categories of work in the project specifications which, individually, are determined by the contracting officer to compose at least 6 percent of the estimated contract price. Categories estimated to cost less than 6 percent shall not be included. For the purpose of determining which categories constitute 6 percent or more of the total contract price, computations for each category shall include all estimated costs of the work in the category (including materials, equipment, and offsite labor as well as onsite labor) plus a prorated share of applicable markups such as those for overhead, profit, bond premiums.

(3) To identify the work encompassed in a category and thereby enable the bidders to ascertain all of the work for which they are obliged to name proposed subcontractors (or themselves), the supplement to bid form, list of subcontractors, (see § 5B-2.202-70(h)), included in the invitation for bids shall be prepared as follows:

(i) For HVAC, enter on form: "All HVAC work in Div. 15, Mechanical, including associated plumbing," and provide several spaces for the bidder to enter more than one name and address as appropriate.

(ii) Identify all other applicable categories on the supplement to bid form, list of subcontractors by section number and title as used in specifications.

(b) Invitations for bids on separate contracts for phased construction where individual categories of work are bid separately need not include a subcontractor listing requirement unless two or more categories of work (as defined in paragraph (a)) are combined in one bid package and the contracting officer, or contracting officer's designee, determines the contract offers subcontracting opportunities as indicated by trade practice.

(c) The requirement to name subcontractors shall not be included in invitations for bids on contracts for new construction or repair and alteration which are not estimated to exceed $1 million. It may be omitted for invitations for bids on specific contracts estimated to exceed this amount, if the contracting officer determines that the listing requirement is not feasible. In such case, he should submit his findings for Central Office approval prior to issuance of the solicitation.

(d) Where bids on alternates are required, the estimated cost of the maximum amount of work which might be included in an award of the contract shall serve as the basis for determining whether both the requirements for listing of subcontractors shall be included in the invitation and the categories of work to be included on the list.

(e) The list of categories of work (as discussed in § 5B-2.202-70(a)) for which subcontractors are required to be named shall be set forth in the supplement to the bid form, list of subcontractors. The supplement shall be prepared as provided in paragraph (a) of this § 5B-2.202-70.

(f) The following clause shall be included in the special conditions:

LISTING OF SUBCONTRACTORS

(a) For each category on the list of subcontractors, which is included as part of the bid, the bidder shall enter either (i) the name and address of the individual or firm with whom the bidder proposes to subcontract for performance of the category, or (ii) the bidder's own name to indicate that the category will not be preformed by subcontract.

(b) If the bidder intends to subcontract with more than one subcontractor for a category, or to perform a portion of a category with the bidder's own forces and subcontract with one or more subcontractors for the balance of the category, the bidder shall

list all individuals or firms (including the bidder) and state the portion (by percentage or narrative description) of the category to be performed by each.

(c) If any alternate bids are required which would change the bidder's selection of subcontractors for designated categories, the bidder shall list (1) the name and address of the individual or firm with whom the bidder proposes to subcontract (or the bidder's own name) for performance of the category if awarded the contract on the base bid only and (2) the individual or firm with whom the bidder proposes to subcontract (or the bidder's own name) if the award includes one or more of the related alternates. The bidder shall clearly show, after each listing, the basis for which each named individual or firm shall be deemed to be the listed subcontractor for the category.

(d) The list may be submitted with the bid or separately by telegraph or mail. If mailed separately, the envelope must be sealed, identified as to content, and addressed in the same manner as prescribed for submission of bids. Failure to submit the list by the time set for bid opening shall cause the bid to be considered nonresponsive except under the conditions set out in the Late Bids and Modifications or Withdrawals clause of Standard Form 22, Instructions to Bidders (Construction Contract).

(e) Except as otherwise provided herein, the successful bidder (contractor) shall not have the onsite work of any listed category or portion of category performed by any individual or firm other than those named in the bid for performance thereof.

(1) The contractor shall perform all onsite work of each category for which the contractor entered the contractor's own name, with personnel carried on the contractor's own payroll (other than operators of leased equipment).

(2) The contractor shall require any firm listed for the entire heating, ventilating, and air-conditioning (HVAC) to be experienced in and normally perform either heating or air-conditioning. The listed subcontractor shall perform with the subcontractor's own forces at least 30 percent of the onsite labor for the entire HVAC category. If two or more firms are listed, at least one shall meet the experience requirements above and perform a minimum of 30 percent of the onsite labor of the work for the entire category.

(3) For all other categories, the contractor shall require each subcontractor (or the contractor) named in the bid for an entire category or portion thereof to perform with personnel carried on the subcontractor's own payroll (other than operators of leased equipment) not less than 70 percent* of the onsite work of that category or portion of category.

*NOTE.—If the contracting officer determines that the 70 percent performance requirement, as stated above, is not feasible for a specific contract, the contracting officer may specify a lesser percentage and submit his findings for central office approval prior to issuance of the solicitation.

(f) In the event a subcontractor fails or refuses to perform with the subcontractor's own forces, the minimum amount of onsite work as specified above, the Government shall have the right to require the contractor (1) to terminate the subcontract (2) to secure approval for a substitution under the terms and conditions set forth in paragraphs (j) and (l) of this clause.

(g) For the purpose of this requirement, the following definitions apply: (1) The term "subcontractor" shall mean an individual or firm with whom the bidder proposes to enter into a subcontract for the performance of work on the site, including construction, fabrication, or installation of materials and/or equipment pursuant to the project specifications applicable to any category included on the list of subcontractors. It excludes any manufacturer, fabricator, or supplier whose onsite work would be limited to incidental activities such as testing or adjusting equipment or material installed by others.

(2) The term "subcontract" includes, in addition to a two-signature document, all transactions resulting from acceptance of offers by awards or notices of awards, agreements and job orders, letter agreements, and letters of intent and orders such as purchase orders, under which the subcontract becomes effective by written acceptance or performance. It also includes modifications thereto.

(3) "Onsite work" is the cost of labor and supervision and excludes the cost of materials and/or equipment.

(h) Nothing contained in this clause shall be construed as changing the percentage requirement in the general conditions for the contractor to perform with the contractor's own forces.

(i) The contractor shall be responsible for all aspects of performance by subcontractors.

(205(c), 63 Stat. 390; (40 U.S.C. 486(c)).)

Dated: August 31, 1978.

ROBERT K. BOGARDUS,
Acting Commissioner.

[FR Doc. 78-25456 Filed 9-8-78; 8:45 am]

[6820-25]

CHAPTER 101—FEDERAL PROPERTY MANAGEMENT REGULATIONS

SUBCHAPTER F—ADP AND TELECOMMUNICATIONS

[FPMR Amdt. F-33]

PART 101-37—TELECOMMUNICATIONS MANAGEMENT

Subpart 101-37.2—Major Changes and New Installations

MAJOR TELECOMMUNICATIONS CHANGES

AGENCY: Automated Data and Telecommunications Service, General Services Administration.

ACTION: Final rule.

SUMMARY: This regulation clarifies the General Services Administration's policy concerning approvals relative to the replacement of telecommunications equipment. In the past some agencies have been replacing equipment without GSA approval or knowledge. This change to the regulations requires agencies to obtain GSA approval when this equipment is replaced or relocated.

EFFECTIVE DATE: September 11, 1978.

FOR FURTHER INFORMATION CONTACT:

Robert R. Johnson, Procurement Policy and Regulations Branch, Policy and Evaluation Division, Office of Policy and Planning, Automated Data and Telecommunications Service, General Services Administration, Washington, D.C. 20405, 202-566-0834.

Section 101-37.202 is amended by revising paragraphs (a) (1), (2), (5) through (9), and (11); adding paragraph (a)(12); and revising paragraph (b) to read as follows:

§ 101-37.202 Description of major changes.

* * * * *

(a) *Local telephone service.* (1) Installation, relocation, replacement, or removal of private branch exchanges.

(2) Installation, relocation, replacement, or removal of one or more switchboard positions involving existing services.

* * * * *

(5) Installation, relocation, replacement, or removal of 10 or more individual business lines in association with key telephone systems.

(6) Installation, replacement, or removal of tielines between private branch exchanges.

(7) [Reserved]

(8) Installation or replacement of Centrex telephone service on the agency's premises or participation in Centrex telephone service which may be on the telephone company's premises.

(9) Installation or replacement of equipment of any type for which termination liability of more than $50,000 must be assumed on the removal of such equipment, and service connection charges, plant construction charges, or minimum revenue guarantees of more than $50,000.

* * * * *

(11) Installation, relocation, replacement, or removal of Automatic Call Distributor (ACD) equipment. (For the purpose of § 101-37.203(a)(1), an ACD is considered to be PBX equipment.)

(12) Relocation of any key system, regardless of size or number of business lines, which has direct FTS circuits attached thereto or direct dial access to FTS service.

(b) *Intercity telephone service.* Installation or replacement of voice facilities interconnecting service points

located in separate exchange areas, including Wide Area Telephone Service (WATS).

* * * * *

(Sec. 205(c), 63 Stat. 390; (40 U.S.C. 486(c)).)

Dated: August 30, 1978.

JAY SOLOMON,
Administrator of General Services.

[FR Doc. 78-25425 Filed 9-8-78; 8:45 am]

[4110-12]

Title 45—Public Welfare

SUBTITLE A—DEPARTMENT OF HEALTH, EDUCATION, AND WELFARE

PART 5b—PRIVACY ACT

Exempt Record Systems.

AGENCY: Health, Education, and Welfare.

ACTION: Final rule.

SUMMARY: This regulation exempts from certain provisions of the Privacy Act two systems of records maintained by the Department of Health, Education, and Welfare: The "Health Resources Utilization Statistics, DHEW/OASH/NCHS 09-37-0013" and the "Personnel Research and Merit Promotion Test Records, HEW/SSA/OMA 09-60-0017."

The intended effect of this amendment is to exempt these two systems of records from the notification, access, correction, and amendment provisions of the Privacy Act.

EFFECTIVE DATE: September 11, 1978.

FOR FURTHER INFORMATION CONTACT:

Peter Gness, Acting Director, Fair Information Practice Staff, Room 526F, Humphrey Building, 200 Independence Avenue SW., Washington, D.C. 20201, area code 202-245-7012.

SUPPLEMENTARY INFORMATION: on November 28, 1977, notice was published in the FEDERAL REGISTER (42 FR 60573) inviting written comments on the proposed exemption of the "Health Resources Utilization Statistics" and "Personnel Research and Test Validation Records" systems from the notification, access, correction, and amendment provisions of the Privacy Act. Since that notice both systems have been renumbered, and the second system has also been renamed. Both systems have remained otherwise unchanged. Their proper identifications are now "Health Resources Utilization Statistics, DHEW/OASH/NCHS 09-37-0013" and "Personnel Research and Merit Promotion Test Records, HEW/SSA/OMA 09-60-0017."

One comment was received before the published due date, January 12, 1978. That comment supported the Secretary's proposal regarding the "Health Resources Utilization Statistics" system and agreed that the Privacy Act exemption would encourage health care providers to supply more complete data for research conducted under the Health Services Research, Health Statistics and Medical Libraries Act.

After condideration of all relevant information regarding the two record systems, the Secretary finds that the "Health Resources Utilization Statistics" system complies with subsection (k)(4) of the Privacy Act in that it is "required by statute to be maintained and used solely as statistical records." The Secretary further finds that the "Personnel Research and Test Validation Records" system complies with subsection (k)(6) of the Privacy Act in that it is "testing or examination material used solely to determine individual qualifications for appointment or promotion in the Federal service, the disclosure of which would compromise the objectivity or fairness of the testing or examination process."

45 CFR Part 5b is amended as follows:

Section 5b.11 is revised by adding paragraphs (b)(2)(iii)(E) and (b)(2)(vi)(A) as follows:

§ 5b.11 Exemptions.

* * * * *

(b) * * *
(2) * * *
(iii) * * *
(E) The Health Resources Utilization Statistics, DHEW/OASH/NCHS.

* * * * *

(vi) Pursuant to subsection (k)(6) of the Act:

(A) The Personnel Research and Merit Promotion Test Records, HEW/SSA/OMA.

Dated: September 1, 1978.

HALE CHAMPION,
Acting Secretary.

[FR Doc. 78-25458 Filed 9-8-78; 8:45 am]

[4910-59]

Title 49—Transportation

CHAPTER V—NATIONAL HIGHWAY TRAFFIC SAFETY ADMINISTRATION, DEPARTMENT OF TRANSPORTATION

[Docket No. 73-19; Notice 24]

PART 581—BUMPER STANDARD

Interpretation and Text Correction

AGENCY: National Highway Traffic Safety Administration (NHTSA).

ACTION: Correction and interpretation.

SUMMARY: This notice responds to a request from Ford Motor Co. for further interpretation of the bumper damageability requirements of part 581, Bumper Standard, and announces the photographic procedure NHTSA will use as an aid in determining whether damage to filler panels and stone shields (shielding panels) is normally observable for purposes of compliance with the standard. This interpretation assists manufacturers in ascertaining whether contemplated bumper designs will provide a level of performance consistent with the requirements of part 581. This notice also corrects an inadvertent error in the previously announced effective dates for phase I of the bumper requirements.

DATE: This interpretation and the correction to part 581 are effective immediately.

FOR FURTHER INFORMATION CONTACT:

Mr. Richard Hipolit, Office of Chief Counsel, 400 Seventh Street SW., Washington, D.C. 20590, 202-426-9512.

SUPPLEMENTARY INFORMATION: NHTSA has established, through issuance of Part 581, Bumper Standard (49 CFR Part 581), requirements for the impact resistance of vehicles in low-speed collisions. The effective dates of part 581 are September 1, 1978, for components other than the bumper face bar and certain associated fasteners (phase I), and September 1, 1979, for all vehicle components (phase II). On May 15, 1978, the agency published a notice (43 FR 20804) summarizing its interpretation of various aspects of the part 581 damage resistance requirements as they relate to vehicle exterior surfaces. Ford Motor Co. has asked for additional clarification of the requirements of § 581.5(c)(10) and (11) of the standard, in a June 22, 1978, request for interpretation that has been placed in the public docket.

APPLICATION OF THE DAMAGE CRITERIA TO BUMPER FACE BARS AND ATTACHED COMPONENTS

The phase II requirements prohibit permanent deviations from the original contours of vehicle exterior surfaces following pendulum and barrier impacts. An exception is made for the "bumper face bar," whose surface is permitted ¾-inch deviation from its original contour and position relative to the vehicle frame (set) and a ⅜-inch deviation from its original contour on areas of contact with the barrier face or the impact ridge of the pendulum test device (dent) (§ 581.5(c)(11)). Bumper face bar is defined in § 581.4 as "any component of the bumper system that contacts the impact ridge of the pendulum test device." NHTSA has stated that this definition includes components of a multipiece bumper which are connected as part of the same load bearing structure to a bumper system component which is contacted either by the pendulum test device or the test barrier (43 FR 20804; May 15, 1978).

Ford has inquired as to the applicability of this definition of bumper face bar to a variety of components such as directional signals and shielding panels, which may be mounted to a load bearing structure while themselves performing no structural function. Components which do not perform a load bearing function are not necessarily components of the bumper system (and potentially bumper face bar) solely as the result of their incidental mounting on or near a load bearing structure of the bumper system. Components must be examined on a case-by-case basis to determine whether they constitute components of the bumper system.

The agency stated in a previous notice that shielding panels are considered a component of the bumper system and thus will qualify as bumper face bar if contacted in testing (43 FR 20804; May 15, 1978). The same would be true of other cosmetic components directly associated with the bumper system's function such as manufacturing cutout patches and tape strips the primary function of which is to hide protrusions, fasteners, or other unsightly aspects of the bumper's construction.

Illumination devices, e.g., fog lamps and directional signals, are not associated with the bumper system's function and could not qualify as components of the bumper system, even if contacted by the pendulum test device or barrier.

Still other components could be considered components of the bumper system, depending on their application in a particular vehicle design. For example, a grille, which would generally be associated with the vehicle body, could perform a protective function as a component of a bumper system in a soft-face configuration, and could therefore qualify as a component of the bumper system.

The agency recognizes that components mounted to a bumper face bar, but not themselves considered face bar because they are not part of the bumper system or are not impacted in testing, will necessarily move with the set of the bumper face bar, although they do not qualify for the permissible ¾-inch set allowance of (c)(11)(i). However, the stricter damage limitations of § 581.5(c)(10), applicable to such components, are actually limited to "normally observable changes in the stated area following the prescribed test procedures" (42 FR 24058; May 12, 1977). "[M]ovement of small patches covering manufacturing process cutouts on the face bar" and movement of shielding panels with the set of the bumper are not considered normally observable (43 FR 20804; May 15, 1978). Similarly, nonbumper (e.g., fog lamps) and other bumper system components (e.g., tape strips), attached to or built into a bumper face bar but not contactable by the test device would not be considered to have incurred normally observable damage when they simply move with the set of the face bar. Such movement would, however, be normally observable if the function of the mounted component were impaired, e.g., by misalinement, in the case of a fog lamp beam, to the extent that it would not be adjustable to its normal aim.

The thin, polymeric tape strips described above, typically are adhesively bonded to the surface areas of the bumper face bar. The impact of the pendulum test device or test barrier with the bumper face bar may cause distortions on portions of the face bar not directly impacted during testing and cause localized separation of these tape strips from the face bar surface, in the form of wrinkling or bubbling.

The agency has previously stated that, "while both barrier and pendulum impacts can cause some chipping or flaking of chrome or soft-face material (depending on the type of system being tested), such damage is insignificant" (41 FR 9346; March 4, 1976). This reasoning also governs minor damage to tape strips, such as wrinkling or bubbling, so long as the strips are contactable and thus quality as bumper face bar. This interpretation would apply equally whether the damage happened to fall at the area of impact or elsewhere on the face bar.

Any component of the bumper system which can be contacted by the impact ridge of the pendulum test device in any permissible pendulum stroke is considered bumper face bar for testing of that bumper system, whether or not it was actually contacted in a particular test sequence. Further, the interpretation concerning noncontactable but load bearing components of multipiece bumpers discussed above, although originally announced in the context of metal bumpers (43 FR 20804; May 15, 1978), would also govern a multipiece bumper assembly equipped with plastic or rubber bumper guards or nerf strips. Thus, all load bearing components of the bumper assembly, whether plastic, rubber, or metal would be considered bumper face bar and be entitled to a ¾-inch set if they are connected as a part of the same load bearing structure.

MEASUREMENT OF DAMAGE TO THE BUMPER FACE BAR

Paragraph 581.5(c)(11) provides:

Thirty minutes after completion of each pendulum and barrier impact test, the bumper face bar shall have—

(i) No permanent deviation greater than ¾-inch from its original contour and position relative to the vehicle frame; and

(ii) No permanent deviation greater than ⅜-inch from its original contour on areas of contact with the barrier face or the impact ridge of the pendulum test device measured from a straight line connecting the bumper contours adjoining any such contact area.

Ford has inquired as to the measurement techniques the agency will use in determining compliance with these damage limitations. NHTSA has previously recognized that "the measurement of dent and set on some bumpers with complex curvature may not be a simple procedure" (42 FR 24056; May 12, 1977). In many cases there may be more than one procedure by which damage can be accurately measured. Innovations in measurement techniques may be needed as new bumper designs are developed. Therefore, while the agency can express the basic measurement geometry (which appears to be Ford's basic concern) that establish compliance with the damage limits, it cannot specify a particular method to be used in measuring those distances in all cases.

Ford requested resolution of the inadvertent inconsistency between agency statements in the May 1978 interpretation that "the two types of deviation are additive in an area of contact with the barrier face or impact ridge" but that "the localized deviation permitted by paragraph (ii) is measured taking any contour in the area of impact and measuring its movement from its location prior to impact to postimpact." The first statement accurately represents that the deviations are additive in the area of contact with the barrier or pendulum. The second statement failed to make the different and intended point that

the contour of the contact area is measured from the contour previous to contact, but only after movement of the surface position and contour relative to the vehicle frame attributable to set has been subtracted. It should be noted that contour change attributable to set must result from a generalized flattening of the bumper surface outside the area of contact. Otherwise the concept of dent would be indistinguishable from contour set.

The agency rejects Ford's suggestion to merely measure the contour in the contact area in relation to the surrounding contour following impact. The best example of why the original contour must serve as the baseline is the case in which the contact area consisted of a ⅜-inch protrusion from the surrounding area prior to impact and a ⅜-inch depression in relationship to the surrounding contour following impact. The resulting dent would actually be three-quarters-of-an-inch deep.

Ford further recommended that all dent measurements be made in vertical sections of the plane of impact which produced the dent. Recognizing the need for flexibility in the measurement of complex bumper configurations, Ford has withdrawn this portion of its request for interpretation.

Ford has questioned the portion of NHTSA's previous interpretation (43 FR 20804; May 15, 1978) which stated that dent may be measured "along any dimension, i.e., width, length, depth," from any line connecting the adjacent bumper contours. The agency has decided that the ⅜-inch dent limitation of § 581.5(c)(11)(ii) should presently be limited to depth measurements only. Development of the phase II face-bar contour requirements and studies which formed the basis for the ⅜-inch dent requirements during the rulemaking proceeding focused primarily on limitation of the depth of deviations. A ⅜-inch dent limitation measured in any direction might, at this time, impose an unanticipated burden in some cases and perhaps restrict the flexibility of manufacturers in selecting bumper systems for different model sizes which provide a suitable balance among the interrelated considerations of damage resistance, weight reduction, and cost. Should future testing and bumper design developments indicate that further face-bar dent limitations would be beneficial, such a requirement will be the subject of a future rulemaking notice.

Finally, Ford has asked whether there can be more than one contact area for purposes of measuring damage resulting from a particular impact. It is clear that multiple areas of contact between the bumper face bar and the impact ridge or test barrier may exist, thus creating multiple areas in which dent may occur. Given the complexity of some bumper designs, it would be unrealistic and impractical to require that all damage incurred in an impact be combined for measurement purposes. Deviations caused by impact at noncontiguous locations on the bumper system will be treated as separate contact areas, and damage in each of these areas will be measured separately, without reference to any other area of contact.

Photographic Procedures To Aid in Evaluating Damage to Shielding Panels

NHTSA's previous interpretation of the Part 581 requirements (43 FR 20804; May 15, 1978), addressed the problem of judging damage to vehicle shielding panels for purposes of determining compliance with § 581.5(c)(10). That provision addresses all exterior surfaces other than bumper face bar and prohibits permanent deviation from original contours or separation of materials from the surface to which they are bonded. The interpretation reiterated that the agency does not consider damage to shielding components to be in violation of the standard if that damage is not "normally observable." In the case of shielding panels, damage not visible in good quality, photographic prints of the suspect area would not be considered by the agency to be "normally observable." The notice indicated that the Office of Vehicle Safety Compliance (OVSC), formerly the Office of Standards Enforcement, would establish standard procedures by which NHTSA would take its evaluative photographs.

While NHTSA originally stated that 8 by 10 inch photographic prints would be employed, the agency has concluded that the use of contact prints of that size may present practical difficulties due to the limited availability and unwieldiness of large cameras. Further study of existing photographs indicates that 4 by 5 inch contact prints are adequate for the agency's testing.

Upon completion of impact tests in accordance with the test procedures of § 581.7, OVSC photographs shielding panel areas that may have experienced permanent deviation or separation of materials.

View Camera. OVSC uses a standard 4 by 5 inch View Camera with focal length of 127 mm, a maximum aperture of f/4.7, a coated lens and available shutter speeds of 1 second to 1/400 second.

Film. OVSC uses type 52 Pola Pan 4 by 5 inch film for Polaroid prints.

Illumination. OVSC takes the photographs indoors using the following illumination procedures: (1) Illuminating the area to be photographed with crosslighting using two 1,000-watt photoflood lamps for main light, and one 1,000-watt photoflood lamp for fill-in light; and (2) positioning the photoflood lamps so that the light rays strike the subject area at a 45-degree angle from a distance of 10 feet from the area being photographed.

Camera position. OVSC positions the camera at a distance of 6 feet from the center of the suspect area and utilizes ground glass focusing to properly focus the camera for that distance. Photographs are taken both at 90° and 45° angles relative to the suspect area.

Exposure. OVSC utilizes a General Electric, DeJur or Weston photoelectric exposure meter to determine the exposure requirements. Light readings are taken by measuring the intensity of reflected light from a Kodak Gray Card placed upon the area to be photographed. The meter is placed near enough to the subject (gray card) to indicate the average reflected light (at least within a distance equal to the width of the subject being photographed). A light reading is obtained and set opposite the film speed which is indicated on the meter so that the f/stop or the aperture settings and shutter speeds coincide. The correct camera setting is read directly from the meter.

Photographic print. OVSC produces 4 by 5 inch black and white photographic contact prints from the Polaroid film.

Examination of contact print. OVSC examines the completed contact print with the unaided eye for compliance with § 581.5(c)(10).

Correction of Phase I Effective Dates

On May 12, 1977, NHTSA published a Federal Register notice (42 FR 24056) responding to petitions for reconsideration and revising the format of Part 581 as originally announced on March 4, 1976 (41 FR 9346). Those notices inadvertantly indicated that the Phase I exterior surface requirements, now contained in § 581.5(c)(8), would apply to vehicles manufactured from September 1, 1978, to August 1, 1979. The requirements of § 581.5(c)(8) actually apply to vehicles manufactured until August 31, 1979, and the regulation is therefore corrected to reflect the intended effective dates.

In consideration of the foregoing, the date "August 1, 1979", contained in 49 CFR 581.5(c)(8), is hereby corrected to read "August 31, 1979".

The program official and lawyer principally responsible for this document are Nelson Gordy and Richard Hipolit, respectively.

(Secs. 103, 119, Pub. L. 89-563, 80 Stat. 718 (15 U.S.C. 1392, 1407); sec. 102, Pub. L. 92-513, 86 Stat. 947 (15 U.S.C. 1912); delegation of authority at 49 CFR 1.50.)

Issued on: August 30, 1978.

JOAN CLAYBROOK,
Administrator.

[FR Doc. 78-25434 Filed 9-8-78; 8:45 am]

[4310-55]

Title 50—Wildlife and Fisheries

CHAPTER I—U.S. FISH AND WILDLIFE SERVICE, DEPARTMENT OF THE INTERIOR

PART 32—HUNTING

Opening of Kirwin National Wildlife Refuge, Kansas, to Migratory Game Hunting

AGENCY: Fish and Wildlife Service, Interior.

ACTION: Special regulation.

SUMMARY: The Director has determined that the opening to migratory game hunting of Kirwin National Wildlife Refuge is compatible with the objectives for which the area was established, will utilize a renewable natural resource, and will provide additional recreational opportunity to the public.

DATES: Geese—Canada and/or white-front: October 14, 1978, through December 24, 1978, inclusive. Geese—Snow and blue: October 28, 1978, through January 21, 1979, inclusive. Ducks—October 28, 1978, through December 17, 1978, inclusive and December 23, 1978, through December 31, 1978, inclusive.

FOR FURTHER INFORMATION CONTACT:

Keith S. Hansen, Kirwin, Kans. 67644, telephone 913-646-2373.

SUPPLEMENTARY INFORMATION:

§ 32.12 Special regulations; migratory game birds; for individual wildlife refuge areas.

Public hunting of ducks, geese, and coot on the Kirwin National Wildlife Refuge, Kansas, is permitted only on the area designated by signs as open to hunting. This open area, comprising 620 acres, is delineated on maps available at refuge headquarters, 5 miles west of Kirwin, Kans., and from the area manager, U.S. Fish and Wildlife Service, Suite 106, Rockcreek Office Building, 2701 Rockcreek Parkway, North Kansas City, Mo. 64116.

Hunting shall be in accordance with all applicable State regulations governing the hunting of ducks, geese, and coots subject to the following special condition:

(1) Blinds—Temporary blinds constructed above ground from natural vegetation are permitted. Digging of holes or pits to serve as blinds is prohibited.

The provisions of this special regulation supplement the regulations which govern hunting on wildlife refuge areas generally which are set forth in Title 50, Code of Federal Regulations, Part 32. The public is invited to offer suggestions and comments at any time.

NOTE.—The U.S. Fish and Wildlife Service has determined that this document does not contain a major proposal requiring preparation of an economic impact statement under Executive Order 11949 and OMB Circular A-107

Dated: September 1, 1978.

KEITH S. HANSEN,
Refuge Manager.

[FR Doc. 78-25427 Filed 9-8-78; 8:45 am]

[4310-55]

PART 32—HUNTING

Opening of Kirwin National Wildlife Refuge, Kansas, to Upland Game Hunting

AGENCY: Fish and Wildlife Service, Interior.

ACTION: Special regulation.

SUMMARY: The Director has determined that the opening to upland game hunting of Kirwin National Wildlife Refuge is compatible with the objectives for which the area was established, will utilize a renewable natural resource, and will provide additional recreational opportunity to the public.

DATES: Pheasants—November 11, 1978, through January 28, 1979, inclusive. Quail—November 18, 1978, through January 28, 1979 inclusive. Rabbits and squirrels: Only on those days during the open season for the hunting of pheasants and quail.

FOR FURTHER INFORMATION CONTACT:

Keith S. Hansen, Kirwin, Kans. 67644, telephone 913-646-2373.

SUPPLEMENTARY INFORMATION:

§ 32.22 Special regulations; upland game; for individual wildlife refuge areas.

Public hunting of pheasants, quail, cottontail rabbits, and fox squirrels on the Kirwin National Wildlife refuge, Kansas, is permitted only on the area designated by signs as open to hunting. This open area, comprising 3,700 acres, is delineated on maps available at refuge headquarters, 5 miles west of Kirwin, Kans., and from the area manager, U.S. Fish and Wildlife Service, Suite 106, Rockcreek Office Building, 2701 Rockcreek Parkway, North Kansas City, Mo. 64116.

The provisions of this special regulation supplement the regulations which govern hunting on wildlife refuge areas generally which are set forth in Title 50, Code of Federal Regulations, Part 32 and are effective through January 28, 1979. The public is invited to offer suggestions and comments at any time.

NOTE.—The U.S. Fish and Wildlife Service has determined that this document does not contain a major proposal requiring preparation of an economic impact statement under Executive Order 11949 and OMB Circular A-107.

Dated: September 1, 1978.

KEITH S. HANSEN,
Refuge Manager.

[FR Doc. 78-25428 Filed 9-8-78; 8:45 am]

proposed rules

This section of the FEDERAL REGISTER contains notices to the public of the proposed issuance of rules and regulations. The purpose of these notices is to give interested persons an opportunity to participate in the rule making prior to the adoption of the final rules.

[1505-01]

DEPARTMENT OF ENERGY

Economic Regulatory Administration

[10 CFR Parts 211 and 212]

EMERGENCY STANDBY MANDATORY CRUDE OIL AND REFINERY YIELD PROGRAMS

Further Notice of Public Hearing and Solicitation of Additional Comment

Correction

In FR Doc. 78-24624 appearing at page 38848 in the issue of Thursday, August 31, 1978 the hearing date in the third column, first line now reading, "September 26, 1978" should be corrected to read, "September 25, 1978".

[4910-13]

DEPARTMENT OF TRANSPORTATION

Federal Aviation Administration

[Docket No. 78-CE-16-AD]

[14 CFR Part 39]

AIRWORTHINESS DIRECTIVES

Gates Learjet 35/36 Series Airplanes

AGENCY: Federal Aviation Administration (FAA), DOT.

ACTION: Notice of proposed rulemaking.

SUMMARY: This notice proposes to add an airworthiness directive (AD) applicable to Gates Learjet 35/36 series airplanes that would require repetitive inspections of the cabin upper door locking mechanism and places a 3,000-hour life limit on one component in that mechanism until door modification kit AMK78-2 is installed. This action will help insure correct flight crew analysis in the event of an illuminated door open warning light on these airplanes and will eliminate the unsafe conditions that can exist when a certain bolt in the door locking mechanism fails during the door closing operation.

DATES: Comments must be received on or before November 14, 1978.

ADDRESSES: Send comments on the proposal to: FAA Central Region, Office of the Regional Counsel, ACE-7, Attention: Rules Docket Clerk, Docket No. 78-CE-16-AD, 601 East 12th Street, Kansas City, Mo. 64106.

Gates Learjet 35/36/35A/36A maintenance manual revisions having temporary revision Nos. 5-52, 5-54, and 5-55 applicable to this AD may be obtained from Gates Learjet Corp., Mid-Continent Airport, P.O. Box 7707, Wichita, Kans. 67277, telephone 316-722-5640. A copy of this service information cited above is contained in the Rules Docket, Room 916, 800 Independence Avenue SW., Washington, D.C.

FOR FURTHER INFORMATION CONTACT:

William L. Schroeder, Aerospace Engineer, Engineering and Manufacturing Branch, FAA, Central Region, 601 East 12th Street, Kansas City, Mo. 64106, telephone 816-374-3446.

SUPPLEMENTARY INFORMATION:

COMMENTS INVITED

Interested persons are invited to participate in the proposed rulemaking by submitting such written data, views, or arguments as they may desire. Communications should identify the AD docket number, and be submitted in duplicate to the address specified above. All comments received on or before the closing date for comments will be considered by the Administrator before action is taken on the proposed rule. The proposal contained in this notice may be changed in light of the comments received. All comments received will be available both before and after the closing date for comments in the rules docket for examination by interested persons.

AVAILABILITY OF NPRM

Any person may obtain a copy of this NPRM by submitting a request to the FAA, Office of Public Affairs, Attention: Public Information Center, APA-430, 800 Independence Avenue SW., Washington, D.C. 20591, or by calling 202-426-8058. Communications must identify the notice number of this NPRM. Persons interested in being placed on a mailing list for future NPRM's should also request a copy of Advisory Circular No. 11-2 which describes the application procedures.

THE PROPOSAL

Investigation of a recent incident on a Gates Learjet model 23 airplane which involved opening of the cabin entrance upper door during takeoff showed that the bolt common to the upper door locking pins actuating mechanism and the inside locking handle had failed because of fatigue. Friction between the handle and its shaft, after bolt failure, allowed what appeared to be satisfactory operation of the door pins with the door open. However, slippage of the door handle on its shaft when the door was closed prevented the locking pins from being driven all the way into the locked position, thereby allowing the door to open as a result of vibration, external air loads or cabin pressurization loads. Subsequent investigation by the manufacturer shows that fatigue failure of the bolt is due to wear of the hole in which the bolt is installed and high door locking forces caused by a worn or improperly rigged door locking mechanism.

To correct the above conditions, AD 77-19-02 (42 FR 46920-46923) was issued, applicable to Gates Learjet 23, 24, and 25 series airplanes having a 36-inch wide (as opposed to a 24-inch wide) cabin door. Subsequently, Gates Learjet has developed a door modification kit No. AMK78-2 which, when installed, eliminates the need for the repetitive inspections and bolt replacement. AD 77-19-02 has been amended to add the door modification kit as an optional means of compliance. The design for 36-inch wide cabin doors on Gates Learjet 35/36 series airplanes is identical to the design of doors on Gates Learjet 24 and 25 series airplanes on which bent or sheared bolts were discovered as a result of the issuance of AD 77-19-02. Because of these developments, Gates Learjet has issued revisions numbered 5-52, 5-54, and 5-55 to maintenance manual 35/36/35A/36A, applicable to 35/36 series airplanes, recommending a 3,000-hour life limit for the bolt and repetitive inspections of the door locking mechanism.

The FAA has concluded that failure of the bolt common to the upper door locking pins actuating mechanism and the door handle shalft is an unsafe condition thay may exist or develop in other airplanes of the same type design. The FAA believes that the inspections and bolt replacement noted above should be made mandatory to assure accomplishment by all owners/operators of affected 35/36 series airplanes, regardless of the type of inspection program approved for the airplanes, pending door modification. Accordingly, an AD is being proposed

that would make compliance with the aforementioned service manual revisions mandatory for certain Gates Learjet 35/36 series airplanes having 36-inch wide cabin doors until door modification kit No. AMK78-2 is installed.

THE PROPOSED AMENDMENT

Accordingly, the FAA proposes to amend § 39.13 of part 39 of the Federal Aviation Regulations (14 CFR 39.13) by adding the following new airworthiness directive:

GATES LEARJET. Applies to those model 35 (serial Nos. 35-001 through 35-167) and 36 (serial Nos. 36-001 through 36-038) airplanes, certificated in all categories, which have a 36-inch wide (as opposed to 24-inch wide) cabin door.

Compliance. Required as indicated in accordance with compliance table I set forth in this AD, unless already accomplished.

To assure proper locking of the cabin upper door when the inside handle is in the locked position and to prevent possible unwanted door openings that may occur, accomplish the following at the time intervals noted in table I of this AD:

(A) Inspect and replace, at the time intervals noted in table I above, the bolt identified as [5] in figure I of this AD in accordance with Gates Learjet 35/36/35A/36A maintenance manual temporary revisions Nos. 5-52 and 5-55 or later revisions and as summarized below:

(1) Remove the bolt from the upper door rod control assembly and visually inspect it for cracks, breaks, bends, or wear. If any of the aforementioned defects are found, accomplish the door locking mechanism inspection required by paragraph "B" of this AD prior to the next flight; and

(2) Replace the bolt removed in paragraph (A)(1) of this AD with a new Gates Learjet part No. 2311490-8 bolt, or a new AN3-21 bolt modified in accordance with detail "A" in figure I of this AD, and secure using an AN960D10 washer and either a new MS20365-1032 nut or AN310-3 nut and MS24665-132 cotter pin.

TABLE I

COMPLIANCE TIMES

Airplane Total Time In Service (Hours)	INSPECTION TIMES			
	Paragraph "A" Bolt Inspection & Replacement		Paragraph "B" Locking Mechanism Inspection	
	Initial Inspection/ Replacement	Interval for Repetitive Inspections/ Replacement	Initial Inspection	Interval for Repetitive Inspections
0 - 2,999	Prior to or upon the accumulation of 3,075 hours' time-in-service	Each 3,000 hours' time-in-service thereafter	In accordance with asterisk(*) paragraph below or upon accumulation of 6,075 hours' time-in-service, whichever occurs first	In accordance with asterisk(*) paragraph below or upon accumulation of each 6,000 hours' time-in-service after initial inspectior
3,000 - 5,999	Within 75 hours' time-in-service after the effective date of this AD	Each 3,000 hours' time-in-service thereafter	In accordance with asterisk(*) paragraph below or upon accumulation of 6,075 hours' time-in-service, whichever occurs first	In accordance with asterisk(*) paragraph below or upon accumulation of each 6,000 hours' time-in-service after initial inspectior
6,000 - up	Within 75 hours' time-in-service after the effective date of this AD	Each 3,000 hours' time-in-service thereafter	Within 75 hours' time-in-service after the effective date of this AD	In accordance with asterisk(*) paragraph below or upon accumulation of each 6,000 hours' time-in-service after initial inspectior

* The door locking mechanism inspection must be accomplished any time the bolt inspection required by Paragraph "A" of this AD reveals a cracked, bent, broken or worn bolt.

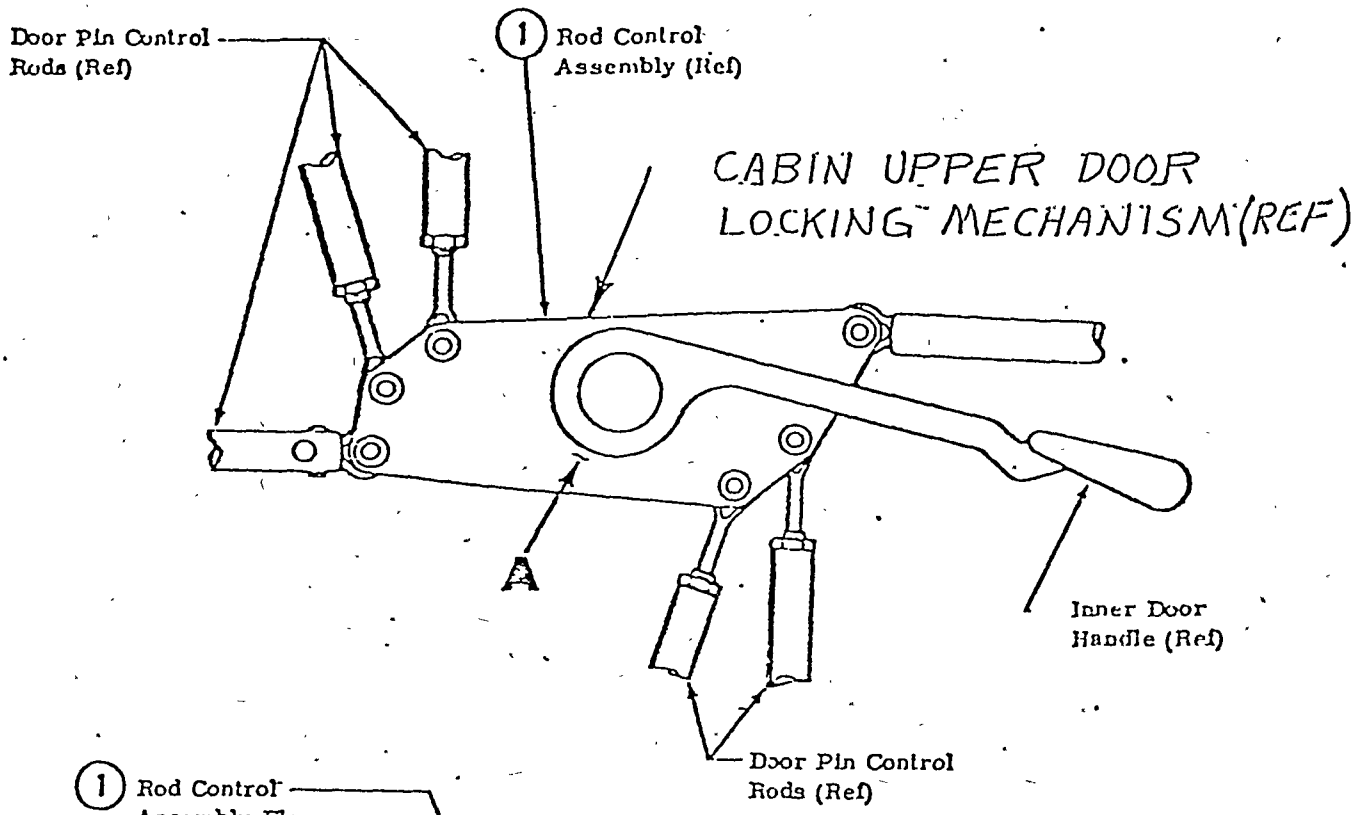

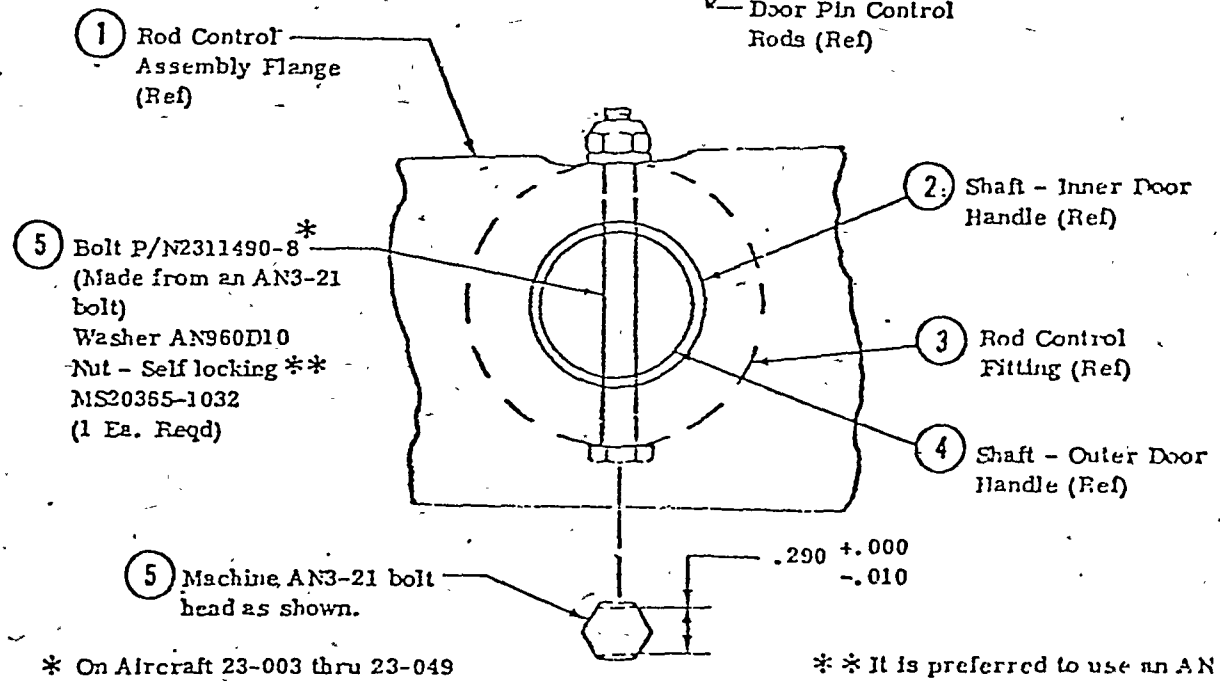

* On Aircraft 23-003 thru 23-049 not modified by SK23-114, replace existing pin with this bolt.

** It is preferred to use an AN 310-3 castellated nut and a MS24665-132 cotter pin in the place of the self locking nut.

Detail A

FIGURE I

(B) Inspect, at the time intervals noted in table I above, the cabin door locking mechanism in accordance with Gates Learjet 35/36/35A/36A/ maintenance manual temporary revision No. 5-54 or later revisions, and as summarized below:

(1) Drill out rivets and remove cabin upper door inner panel.

(2) Remove and inspect door locking mechanism for wear and defects in accordance with Learjet Service manual inspection requirements. The maximum allowable diameter (measured in any direction) of the hole in which the [5] bolt is installed is 0.201 inches. Replace any excessively worn or defective parts prior to the next flight.

(3) Reinstall door locking mechanism and using rivets, reinstall the inner panel.

(4) Check door locking mechanism for free movement with no binding through entire operating travel. Correct any binding prior to the next flight.

(5) Energize door warning system and check its operation for proper functioning.

(C) Submit a written report on any cracked, broken, bent or worn [5] (see figure I of this AD) bolts discovered during inspections required by this AD to the FAA via a letter to FAA, Chief, Engineering and Manufacturing Branch (ACE-210), 601 East 12th Street, Kansas City, Mo. 64106, or an FAA M or D report (FAA Form 8330-2).

The report must include airplane model, serial number, airplane total time-in-service, bolt or pin total time-in-service and statements describing the condition of the bolt and the hole including dimensions of the hole determined in accordance with paragraph (B)(2) of this AD. (Reporting approved by the Office of Management and Budget under OMB No. 04-RO174.

(D) The actions made mandatory by paragraphs A, B, and C of this AD are no longer required when Gates Learjet door modification kit AMK78-2 is installed.

(E) Airplanes may be flown in accordance with FAR 21.197 to a base where this AD can be accomplished.

(F) Any equivalent method of compliance with this AD must be approved by the Chief, Engineering and Manufacturing Branch, FAA, Central Region.

(Secs. 313.(a), 601, 603 of the Federal Aviation Act of 1958, as amended, (49 U.S.C. 1354(a), 1421, 1423); sec. 6(c) Department of Transportation Act (49 U.S.C. 1655(c)); § 11.85 of the Federal Aviation Regulations (14 CFR sec. 11.85).)

NOTE.—The FAA has determined that this document involves a proposed regulation which is not considered to be significant under the procedures and criteria prescribed by Executive Order 12044 and as implemented by interim Department of Transportation guidelines (43 FR 9582; March 8, 1978).

Issued in Kansas City, Mo. on August 28, 1978.

C. R. MELUGIN, Jr.
Director, Central Region.

[FR Doc. 78-25443 Filed 9-8-78; 8:45 am]

[4910-13]

[14 CFR Part 71]

[Airspace Docket No. 78-CE-22]

CONTROL ZONE AND TRANSITION AREA, SCOTTS BLUFF, NEBR.

Proposed Alteration

AGENCY: Federal Aviation Administration (FAA), DOT.

ACTION: Notice of proposed rulemaking (NPRM).

SUMMARY: This notice proposes to alter the control zone and the 700-feet transition area at Scottsbluff, Nebr., to provide additional controlled airspace for aircraft executing a new VOR/DME instrument approach procedure to runway 5 at the Scotts Bluff County Airport, Scottsbluff, Nebr.

DATES: Comments must be received on or before October 14, 1978.

ADDRESSES: Send comments on the proposal to Federal Aviation Administration, Chief, Operations, Procedures and Airspace Branch, Air Traffic Division, ACE-530, 601 East 12th Street, Kansas City, Mo. 64106, telephone 816-374-3408. The official docket may be examined at the Office of the Regional Counsel, Central Region, Federal Aviation Administration, Room 1558, 601 East 12th Street, Kansas City, Mo. An informal docket may be examined at the Office of the Chief, Operations, Procedures and Airspace Branch, Air Traffic Division.

FOR FURTHER INFORMATION CONTACT:

Gary W. Tucker, Airspace Specialist, Operations, Procedures, and Airspace Branch, Air Traffic Division, ACE-538, FAA, Central Region, 601 East 12th Street, Kansas City, Mo. 64106, telephone 816-374-3408.

SUPPLEMENTARY INFORMATION:

COMMENTS INVITED

Interested persons may participate in the proposed rulemaking by submitting such written data, views, or arguments as they may desire. Communications should identify the airspace docket number, and be submitted in duplicate to the Operations, Procedures and Airspace Branch, Air Traffic Division, Federal Aviation Administration, 601 East 12th Street, Kansas City, Mo. 64106. All communications received on or before October 14, 1978, will be considered before action is taken on the proposed amendment. The proposal contained in this notice may be changed in light of the comments received. All comments received will be available both before and after the closing date for comments in the rules docket for examination by interested persons.

AVAILABILITY OF NPRM

Any person may obtain a copy of this NPRM by submitting a request to the Federal Aviation Administration, Operations, Procedures and Airspace Branch, 601 East 12th Street, Kansas City, Mo. 64106, or by calling 816-374-3408. Communications must identify the notice number of this NPRM. Persons interested in being placed on a mailing list for further NPRM's should also request a copy of Advisory Circular No. 11-2 which describes the application procedure.

THE PROPOSAL

The FAA is considering amendments to subpart F, § 71.171 of the Federal Aviation regulations (14 CFR 71.171) and subpart G, § 71.181 of the Federal Aviation regulations (14 CFR 71.181) by altering the control zone and 700-foot transition area at Scottsbluff, Nebr. To enhance airport usage by providing additional instrument approach capability to the Scotts Bluff County Airport, the city of Scottsbluff, Nebr., has requested a new VOR/DME instrument approach procedure to runway 5. The establishment of this instrument approach procedure entails alteration of the control zone and transition area at Scottsbluff, Nebr., at and above 700 feet above ground level (AGL) within which aircraft are provided additional air traffic control service. The intended effect of this action is to insure segregation of aircraft using the new approach procedure under instrument flight rules (IFR) and other aircraft operating under visual flight rules (VFR).

Accordingly, the Federal Aviation Administration proposes to amend subpart F, § 71.171 of the Federal Aviation regulations (14 CFR 71.171) as republished on January 3, 1978 (43 FR 355), by altering the following control zone:

SCOTTSBLUFF, NEBR.

Within a 5-mile radius of the Scottsbluff County Airport (latitude 41°52'40" N., longitude 103°35'47" W.); and within 2 miles each side of the Scottsbluff VORTAC 259° radial extending from the 5-mile radius zone to the VORTAC; and within 2-miles each side of the ILS localizer northwest course extending from the 5-mile radius zone to 7-miles northwest of the airport; and within 4.5 miles each side of the Scottsbluff VORTAC 256° radial extending from the 5-mile radius zone to 15.5 miles west of the VORTAC.

Additionally, subpart G, § 71.181, of the Federal Aviation regulations (14 CFR 71.181) as republished on January 3, 1978 (43 FR 440), by altering the following transition area:

SCOTTSBLUFF, NEBR.

That area extending upward from 700 feet above the surface within a 9.5-mile radius of the Scottsbluff County Airport (latitude

41°52'40" N., longitude 103°35'47" W.); within 4.5 miles south and 9.5 miles north of the Scottsbluff VORTAC 079° radial extending from the 9.5-mile radius to 13 miles east of the VORTAC; within 4.5 miles southwest and 9.5 miles northeast of the ILS localizer southeast course extending from the 9.5-mile radius to 13 miles southeast of the outer marker; within 5 miles northeast and 9.5 miles southwest of the ILS localizer northwest course extending from the 9.5-mile radius to 17.5 miles northwest of the airport; within 4.5 miles south and 4.5 miles north of the Scottsbluff VORTAC 256° radial extending from the 9.5-mile radius to 19.5 miles west of the VORTAC.

(Sec. 307(a), Federal Aviation Act of 1958 as amended (49 U.S.C. 1348); sec. 6(c), Department of Transportation Act (49 U.S.C. 1655(c)); sec. 11.61 of the Federal Aviation regulations (14 CFR 11.61).)

NOTE.—The FAA has determined that this document involves a proposed regulation which is not considered to be significant under the procedures and criteria prescribed by Executive Order 12044 and as implemented by interim Department of Transportation guidelines (43 FR 9582; Mar. 8, 1978).

Issued in Kansas City, Mo., on August 29, 1978.

JOHN E. SHAW,
Acting Director,
Central Region.

[FR Doc. 78-25442 Filed 9-8-78; 8:45 am]

[4810-22]

DEPARTMENT OF THE TREASURY

Customs Service

[19 CFR Part 6]

AIR COMMERCE REGULATIONS

Withdrawal of a Proposed Amendment to the Customs Regulations Pertaining to Permits to Proceed for Foreign-Registered Aircraft

AGENCY: United States Customs Service, Department of the Treasury.

ACTION: Withdrawal of proposed amendment.

SUMMARY: This document withdraws a notice of a proposal to require foreign-registered private aircraft arriving from outside the United States to obtain a permit from Customs before proceeding from the airport of entry to any other airport in the United States. The Customs Service has determined that implementation of this procedure at this time would not be in the public interest.

EFFECTIVE DATE: September 11, 1978.

FOR FURTHER INFORMATION CONTACT:

Donald H. Reusch, Carriers, Drawback and Bonds Division, U.S. Customs Service, 1301 Constitution Avenue NW., Washington, D.C. 20229, 202-566-5706.

SUPPLEMENTARY INFORMATION:

BACKGROUND

On October 5, 1977, the Customs Service published a notice of proposed rulemaking in the FEDERAL REGISTER (42 FR 54310) to amend § 6.2(d)(1) of the Customs Regulations (19 CFR 6.2(d)(1)) to require foreign-registered private aircraft arriving from outside the United States to obtain a permit from Customs before proceeding from the airport of entry to any other airport in the United States. A similar permit-to-proceed requirement now is applicable to foreign-registered commercial aircraft arriving from outside the United States. The purpose of the proposal was to facilitate enforcement of the laws administered by the Customs Service by providing Customs a means of monitoring the movement of foreign-registered private aircraft in the United States, including aircraft suspected of smuggling and aircraft which may become subject to the payment of duty because of their sale in the United States.

DISCUSSION OF MAJOR COMMENTS

Several commenters expressed the opinion that the amendment would not achieve its intended purpose because it would not improve the enforcement capabilities of the Customs Service and that the procedure would do little to stop smuggling. One commenter suggested that enforcement should be handled at the airport of first arrival and the pilot or aircraft owner should not be subject to continued surveillance in the United States.

Other commenters noted that Customs can control and collect duty on the sale in the United States of foreign-registered aircraft by coordinating its requirements with the Federal Aviation Administration (FAA). It also was suggested that the FAA could notify Customs of any application for registration of an aircraft that previously had a foreign registration.

Many commenters observed that the amendment would result in a burden on the general public as well as the Customs Service because of the marked increase in the paperwork requirements. They noted that the procedure would require sufficient Customs manpower, during normal working hours as well as on weekends, to ensure that permits were issued without undue delay.

Several commenters stated that it frequently is desirable and necessary to change an itinerary during the course of a business trip and that fuel supply, operational requirements, and weather conditions also may necessitate a change in itinerary, making it extremely difficult for a pilot to designate in advance the other airports to be visited in the United States when departing the airport of entry.

Some commenters noted that the amendment might place the United States in violation of the Convention on International Civil Aviation which in part concerns the right of certain foreign aircraft to make stops within another country without the necessity of obtaining prior permission.

Other commenters stated that the amendment would discriminate against owners and pilots of foreign-registered aircraft flying to the United States because it would not impose the same degree of control over foreign-registered automobiles entering the United States. One commenter noted that business users of private foreign-registered aircraft in the United States would find that any delay imposed upon their operations by the amendment would be unreasonable, unnecessary and discriminatory. Several commenters suggested that the inconvenience imposed on foreign aircraft visiting the United States would discourage tourism.

Many commenters expressed concern that adoption of the proposal would result in retaliatory measures by other countries against the United States.

No comments were received in favor of adoption of the proposal.

RELATED DEVELOPMENTS

The Customs Service notes that the Private Aircraft Inspection Reporting System (PAIRS), its recently initiated national automated arrival reporting system, may be utilized to facilitate enforcement of the laws it administers relating to private aircraft.

WITHDRAWAL OF PROPOSAL

In view of the foregoing, the Customs Service has determined that adoption of the proposal at this time would not be in the public interest. Accordingly, the notice of proposed amendment to § 6.2(d)(1) of the Customs regulations in withdrawn.

DRAFTING INFORMATION

The principal author of this document was Charles D. Ressin, Regulations and Legal Publications Division, Office of Regulations and Rulings, U.S. Customs Service. However, personnel from other offices of the Customs Service participated in its development.

G. R. DICKERSON,
Acting Commissioner of Customs.

Approved: August 30,1978.

RICHARD J. DAVIS,
Assistant Secretary of the Treasury.

[FR Doc. 78-25501 Filed 9-8-78; 8:45 am]

[8320-01]

Part 3.
VETERANS ADMINISTRATION

[38 CFR Part 3]

VETERANS BENEFITS

Effective Dates

AGENCY: Veterans Administration.

ACTION: Proposed rulemaking.

SUMMARY: The Veterans Administration proposes to amend its regulation concerning the effective date of an apportionment of a running award of compensation or pension. Under the current regulation the effective date of an apportionment of a running award of compensation or pension is the first day of the month following the month in which claim is received for apportionment. We are now proposing to change this effective date to first day of the month following the month in which the decision to apportion is made. The need for this change results from our belief that the current effective date rule does not afford the veteran due process of law in the apportionment decisionmaking process. The terms "widow" or "widower" have been changed to "surviving spouse" to eliminate gender references.

DATES: Comments must be received on or before October 11, 1978. It is proposed to make this change effective date of final approval.

ADDRESSES: Send written comments to Administrator of Veterans Affairs (271A), Veterans Administration, 810 Vermont Avenue NW., Washington, D.C. 20420.

Comments will be available for inspection at the address shown above during normal business hours until October 23, 1978.

FOR FURTHER INFORMATION CONTACT:

T. H. Spindle, 202-389-3005.

SUPPLEMENTAL INFORMATION: Under 38 U.S.C. 3107 all or any part of the compensation or pension payable to a veteran may be apportioned as may be prescribed by the Administrator if the veteran is not living with his (her) spouse, or if his (her) children are not in his (her) custody. This section of the law also provides for an apportionment of other Veterans Administration benefits as well as apportionment in the case of hospitalized veterans. (The point of emphasis for this explanation, however, is that benefits may be apportioned "as may be prescribed by the Administrator." This is the authority for the proposed change.

Pursuant to this authority, § 3.400(e) provides that the effective date of a decision to apportion a running award shall be the first day of the month following the month in which the claim is received. Other regulatory provisions (§§ 3.450 through 3.461) provide that an apportionment will be granted only when hardship to the veteran would not result.

Our operating procedures provide that upon receipt of a claim for apportionment of a running award of compensation or pension, an immediate apportionment determination may be made if sufficient information is of record in the claims folder to determine whether an apportionment of the veteran's benefits would cause hardship to him (her) and if not, the amount to apportion. This procedure does not comport with due process of law since the veteran is not given an opportunity to present additional evidence to contest the apportionment claim. In most cases, however, there is no evidence of record which would permit an immediate apportionment decision to be made.

In the usual case the Veterans Adminstration receives a letter from a veteran's dependent (e.g., an estranged spouse) requesting an apportionment of the veteran's benefits. The Veterans Administration then notifies the veteran of the apportionment claim, and requests both the veteran and the dependent to submit income and living expense information. This is the data needed to determine whether an apportionment would cause hardship to the veteran and if not, the amount to apportion. It is also Veterans Administration practice at the time we request this information to begin withholding a portion of the veteran's benefits.

The withholding is effective the first day of the month following the month in which the Veterans Administration receives the apportionment claim. The amount to be withheld is determined based on what the equities appear to be. Since it usually takes between 30 to 60 days to receive the requested evidence, withholding precludes creating a retroactive overpayment against the veteran if the apportionment claim is granted.

Withholding is not required by statute or regulation, but is done as a matter of practice to avoid creating an overpayment against the veteran if the apportionment claim is allowed. (If the apportionment claim is denied the withheld amounts are, of course, returned to the veteran.) We believe that this withholding prior to making the apportionment decision is tantamount to a reduction in benefits without affording the veteran due process of law. While it is true that we are not required to withhold by statute or regulation, not to do so would create considerable hardship on the veteran in cases in which the apportionment claim is allowed effective the first day of the month following receipt of claim, as the current apportionment and past due amounts would have to be taken out of the current award.

To afford the veteran due process under the current effective date rule requires that we not withhold any benefits pending development of the apportionment claim. Since this would cause considerable hardship in the case in which an apportionment is granted, we propose to amend § 3.400(e) to provide that the effective date of an apportionment decision shall be the first day of the month following the month in which the apportionment decision is made.

We recognize that the proposed rule might tend to influence some veterans to delay submission of evidence to prolong an apportionment decision where the equities are clearly in favor of the apportionee claimant. Consequently, we will insist upon timely submission of evidence and will promptly adjudicate apportionment claims upon receipt of the needed evidence. If the veteran refuses to promptly submit evidence, we will assume that an apportionment will not cause him (her) hardship and determine the amount to apportion based on the evidence of record.

ADDITIONAL COMMENT INFORMATION

Interested persons are invited to submit written comments, suggestions, or objections regarding the proposal to the Administrator of Veterans Affairs (271A), Veterans Administration, 810 Vermont Avenue NW., Washington, D.C. 20420. All written comments received will be available for public inspection at the above address only between the hours of 8 a.m. and 4:30 p.m. Monday through Friday (except holidays) until October 23, 1978. Any person visiting central office for the purpose of inspecting any such comments will be received by the central office Veterans Services Unit in room 132. Such visitors to any VA field station will be informed that the records are available for inspection only in central office and furnished the address and the above room number.

Approved: September 3, 1978.

By direction of the Administrator.

RUFUS H. WILSON,
Deputy Administrator.

Section 3.400 is amended by changing the heading of paragraph (d) and revising paragraph (e) as follows:

§ 3.400 General

* * * * *

(d) *Age; veteran 65, surviving spouse 70 (§ 3.208).* * * *

(e) *Apportionment* (§§ *3.450 through 3.461, 3.551, 3.557*). On original claims, in accordance with the facts found. On other than original claims from the first day of the month following the month in which:

(1) Decision is made to apportion a veteran's award, except that where payments to him (her) have been interrupted, apportionment will be effective the day following date of last payment if a claim for apportionment is received within 1 year after that date;

(2) Notice is received that a child included in the surviving spouse's award is not in the surviving spouse's custody, except that where payments to the surviving spouse have been interrupted, apportionment will be effective the day following date of last payment if such notice is received within 1 year after that date.

* * * * *

[FR Doc. 78-25430 Filed 9-8-78; 8:45 am]

[6560-01]

ENVIRONMENTAL PROTECTION AGENCY

[40 CFR Part 52]

[FRL 961-3]

APPROVAL AND PROMULGATION OF IMPLEMENTATION PLANS

Sulfur Oxides Control Strategy, Montana

AGENCY: Environmental Protection Agency.

ACTION: Proposed rule.

SUMMARY: The Environmental Protection Agency is proposing to disapprove the Montana State Implementation Plan (SIP) submission of October 8, 1975 pertaining to the control of sulphur dioxide (SO_2) from the Anaconda copper smelter located near Anaconda, Mont. and is reproposing regulations to become part of the federally enforceable SIP. This action is necessary because the existing SIP and the Montana submission do not contain adequate provisions to control SO_2 emissions from the smelter. The proposed regulations would limit emissions of SO_2 sufficiently to attain and maintain the national ambient air quality standards in the area surrounding the Anaconda smelter. The proposed regulations consist of the following elements: (1) Requirement for the use of best engineering techniques for capture of fugitive emissions. (2) A sulfur dioxide stack emission limitation of 11,800 pounds per hour (142 tons per day) maximum six-hour average, and (3) A provision for malfunctions.

DATE: Written comments should be submitted on or before December 15, 1978.

ADDRESSES: Written comments should be sent to: Regional Administrator, Environmental Protection Agency, Region VIII, 1860 Lincoln Street, Suite 900, Denver, Colo. 80295. Availability of supporting information: A docket (number 8A-78-2) containing information used by EPA in developing the proposed revision is available for public inspection between 8 a.m. and 4 p.m., Monday through Friday at the following offices:

Environmental Protection Agency, Region VIII, Air and Hazardous Materials Division, 1860 Lincoln Street, Denver, Colo. 80295.

Environmental Protection Agency, Central Docket Section, 2903B, Waterside Mall, 401 M Street SW., Washington, D.C. 20460.

FOR FURTHER INFORMATION CONTACT:

Robert R. DeSpain, Chief, Air Programs Branch, U.S. Environmental Protection Agency, Region VIII, 1860 Lincoln Street, Denver, Colorado 80295 (303) 837-3471.

SUPPLEMENTARY INFORMATION: Pursuant to Section 110 of the Clean Air Act, as amended in 1970, the State of Montana submitted a State Implementation Plan (SIP) on March 22, 1972. This SIP was disapproved on May 31, 1972 (37 FR 10842) because it lacked a control strategy for attainment and maintenance of the National Ambient Air Quality Standards (NAAQS) for sulfur oxides (SO_2) in the Helena Intrastate Region. The SO_2 source in the Helena Intrastate Region which is the subject of this proposed rulemaking is the Anaconda Company copper smelter located near Anaconda Montana.

On July 27, 1972, EPA proposed a regulation for the Anaconda smelter which would have limited emissions of SO_2 to 7040 pounds per hour (85 tons per day). This limit was primarily based upon air quality measurements at a single sampler operated by the State of Montana.

Following that proposal, EPA refined the supporting technical assessment and proposed a regulation on October 16, 1975 (40 FR 48521) which included the following requirements.

(1) Best engineering techniques for capture of fugitive emissions of sulfur oxides.

(2) The discharge of sulfur dioxide from the stack of not more than 10,400 pounds per hour maximum six-hour average (125 tons per day).

(3) A measurement system for continuously monitoring sulfur dioxide emissions and stack gas volumetric flow rates.

Following submission of the October 16 proposal for publication, EPA received a revision submitted by the State of Montana on October 8, 1975. The State revision to the SIP contained a regulatory emission requirement which would effect a 75% reduction in overall emissions of sulfur dioxide from the Anaconda smelter and compliance testing procedures permitting SO_2 emissions up to 450 tons per day.

On October 29, 1975 (40 FR 50279), EPA acknowledged receipt of the revision and proposed disapproval. In the same noticed EPA proposed provisions which would establish formal procedures for handling startup, shutdown and malfunction problems that may occur at the smelter.

On November 16, 1975, EPA held a public hearing on the two EPA October proposals. Comments presented at the hearing raised the issue of the economic impact of the proposed regulation on the smelter. Following the hearing, EPA contracted with Stanford Research Institute to project the impacts of EPA regulations on the smelter. The conclusion of the study was that while the economic impacts would be significant, they would not be expected to result in closure of the smelter.

Prior to the 1977 Amendments to the Clean Air Act, economic impact was considered by EPA in determining whether a smelter would be permitted, on an interim basis, to use dispersion techniques to meet ambient standards. As a result of the 1977 Amendments, however, SIPs must include emission limitations necessary to insure attainment and maintenance of NAAQS, without the use of any unauthorized dispersion techniques. Emission limitations must therefore be met through use of constant control technology, regardless of any economic impact on asource. Economic considerations are only relevant for smelters in determining if a smelter is entitled to a primary nonferrous smelter order (NSO) under Section 119, which defers compliance with SIP emission limitations for sulfur dioxide.

During the winter of 1976-1977, EPA conducted a study of the dispersion of plumes in the rugged terrain near the smelter. A final report was published in May 1978 and became available in July 1978. While the results of the study generally support the assumptions made by EPA in its modeling, they did demonstrate the need for EPA to make some adjustments in the model and reassess the impact of the stack emissions on ambient air quality. The reassessment has resulted in the revised emission limitation which is proposed today.

AIR QUALITY ASSESSMENT

In order to obtain more comprehensive ambient SO_2 air quality data, EPA established a three station monitoring network in the vicinity of the smelter in 1973. This network consisted of two stations in the valley monitoring the effects primarily of the fugitive, low level emissions and one station on "C" Hill monitoring the effects of the stack emissions on high terrain. Other ambient monitoring stations have been operated in the vicinity of the smelter in the past five years. The results of these monitoring efforts indicate numerous violations of the national standards for SO_2 at both the valley and high level monitors. This result substantiates the need for control of both low level fugitive and stack emissions of SO_2.

The ambient data derived from the above monitoring, while useful to provide evidence as to the need for control, was not in this case used as the sole basis for determining the exact emission limitation necessary to achieve the National Ambient Air Quality Standards. This is because specific data was not available for the Mt. Hagen area where the highest SO_2 concentrations from the Anaconda smelter are expected to occur. Weather conditions make it difficult to maintain stations in this area during the winter which is the time of the year when the highest SO_2 concentrations are expected. In this case dispersion modeling rather than ambient data was found to produce the most reliable and accurate predictions of maximum SO_2 concentrations. The stack emission requirement was therefore developed through the use of a dispersion model.

The dispersion model used is known as the EPA Valley Model. This model is an empirical approach to the problem of simulating atmospheric conditions in complex terrain The assumptions incorporated into the valley model have been adjusted since EPA's 1975 proposed emission limitation to take into consideration the results of EPA's site-specific plume dispersion study. Since the Valley model results show that attainment of the national 24-hour primary standard (365 ug/m^3) would require the lowest emission rate, the regulation proposed herein is based upon 24-hour estimates. The model predicted a maximum 24-four hour sulfur dioxide concentration of 3000 ug/m^3 to occur on elevated terrain located approximately seven kilometers southwest of the main stack. These concentrations were estimated using emissions from the stack of 97,000 pounds per hour. The assumed meteorological conditions causing the predicted 24-hour values were such that they could be expected to occur more than once a year. Thus, the emission limitation contained in the regulation is based upon the predicted value and a computation which adjusted the assumed emissions to correspond to attainment of the national standards for SO_2.

REGULATIONS

The regulations proposed herein are summarized below.

PLAN DISAPPROVAL

The stipulation requiring an overall reduction in SO_2 emissions of 75 percent (annual average) which was submitted on October 8, 1975, by the State of Montana is to be disapproved because the emission reductions are insufficient to provide for attainment of NAAQS for SO_2.

STACK EMISSIONS

The emissions of SO_2 from the stack shall not exceed 11,800 pounds per hour, maximum 6-hour average. This limitation is based upon dispersion modeling performed by EPA as discussed above.

FUGITIVE EMISSIONS

Fugitive emissions shall be captured utilizing best engineering techniques available. The need for this measure is demonstrated by the presence of numerous measured violations of the NAAQS in the valley, which is affected primarily by low-level fugitive emissions. Based upon comments received at the November 1975 public hearing and independent studies, which demonstrated that hooding of the converter slag return launders is technically infeasible at the Anaconda copper smelter at this time, EPA has deleted that proposed requirement.

IN-STACK MONITORING

A measurement system for continuously monitoring SO_2 emissions and stack gas volumetric flow rates shall be operated in the smelter stack.

MALFUNCTION PROVISIONS

The proposed regulations call for the reporting of excess emissions from the smelter. The regulations define all periods of excess emissions as violations of the applicable emissions standards and establish a procedure whereby the owner or operator of the Anaconda smelter may supply information to the administrator in order to enable him to carry out his statutory duties. Although the information to be supplied is not limited in scope, the regulation does require that if information is given to the Agency, it include: (1) Identification of the emission points; (2) the magnitude of the excess emissions; (3) the identity of the process or control equipment causing the excess emissions; (4) the cause and nature of the excess emissions; and (5) a description of the steps taken by the owner or operator of the subject smelter to remedy the situation causing the emissions, prevent a recurrence, and limit the excess emissions. Finally, nothing in this regulation precludes the Administrator from initiating any appropriate actions under section 113 or 303 of the Clean Air Act.

Under the proposed provisions, the Administrator would exercise his discretion not to pursue enforcement action against the smelter if the excess emissions resulted from malfunctions and if certain other conditions, discussed below, are met. Excess emissions occurring during routine phasing in and out of equipment would not be considered malfunctions. Routine phasing in and out is a regular part of the source's operation, and should be planned in advance to avoid excess emissions. Similarly, excess emissions during scheduled periodic maintenance, such as acid plant catalyst screening, would not be covered by the proposed enforcement discretion provisions. Scheduled maintenance can be planned in advance, and inventory can be built accordingly for use during the periodic shutdowns necessary for this maintenance. The Administrator does not believe that permitting uncontrolled emissions during such periods would be consistent with the Act's constant control requirements. This policy is more fully stated at 42 FR 21472 (April 27, 1977).

In his assessment of the circumstances of the emission of pollutants in violation of the applicable emission limitations, the Administrator will consider whether:

(1) The air pollution control equipment, process equipment, or processes were at all times maintained and operated, to the maximum extent practicable, in a manner consistent with good practice for minimizing emissions;

(2) Repairs were made as expeditiously as practicable, including the use of off-shift labor and overtime;

(3) The amount and duration of the excess emissions were minimized to the maximum extent practicable during periods of such emissions; and,

(4) Bypass of strong SO_2 streams around acid plant was limited to the maximum extent practicable.

If each of these determinations is affirmative in the opinion of the Agency, there could be no additional course of action which would be reasonable for the owner or operator to implement. Moreover, the situation would not warrant the imposition of criminal penalties. Accordingly, the Administrator would not exercise his discretion to follow the Notice of Violation with any further action. The regulation cannot provide a total ex-

emption for excess emissions resulting from malfunctions. The statute does not allow such exemptions where the emission limitation is one which has been established to protect people from harm to health. Exemptions can be provided only for technology-based standards under the holding in *Marathon Oil Company* v. *EPA*, 564 F.2d 1253 (9th Cir. 1977).

COMPLIANCE SCHEDULE

Because this regulation is the first one to establish a federally approved emission limitation for the Anaconda smelter, the regulation would permit Anaconda three years from the date of promulgation to apply the additional controls needed to comply with the emission limitation. Since this is the first sulfur dioxide plan applicable to the Anaconda smelter, the date is consistent with the requirement of Section 110(a)(2)(A) that attainment of a primary national ambient air quality standard be achieved within three years of the approval of a plan. In EPA's view, the date provides for compliance as expeditously as practicable, as required by Section 110(a)(2)(A).

The final compliance date and additional control attainment date applies only to the Anaconda smelter. The new attainment date is not intended to provide additional time for compliance to sources in the AQCR that are already subject to emission limitations in the Montana SIP. The final compliance date for such sources remains unchanged. The new attainment date is provided solely to allow Anaconda sufficient time to comply with the emission limitation proposed today.

It should also be noted that Anaconda may apply for a primary nonferrous smelter order under section 119. Section 119, enacted as part of the 1977 Amendments to the Clean Air Act, establishes a new enforcement mechanism, the primary nonferrous smelter order (NSO), which permits a smelter to defer compliance with its sulfur dioxide emission limitation, if several conditions are satisfied. If the smelter can show that it is unable to afford the adequately demonstrated technology which would enable it to comply with its SIP emission limitation for sulfur dioxide, and it meets other requirements of section 119 and applicable regulations, the smelter may receive an NSO. Under the NSO, the smelter may use dispersion techniques to protect NAAQS, in combination with some degree of constant controls, until January 1, 1983. A second order, deferring compliance with SIP emission limitations up to January 1, 1988, may also be granted under certain conditions. However, the SIP emission limitation for sulfur dioxide is unchanged and the smelter remains responsible for compliance with the limitation through use of constant controls upon expiration of the NSO(s). If Anaconda believes that its smelter is unable to comply with the proposed sulfur dioxide emission limitation, it may apply to the State or EPA for an NSO. If the smelter is issued an NSO, separate fugitive emissions control requirements and malfunction provisions will be established as part of the NSO. The NSO fugitive emissions and malfunction provisions will apply to the smelter for the duration of the NSO.

Since the proposed change revises the Montana implementation plan, the rulemaking requirements of Section 307(d) apply. In accordance with that subsection, the Administrator has established a rulemaking docket in Region VIII and at headquarters in Washington, D.C. The addresses at which the dockets are located are listed at the beginning of this notice. The technical support document and explanatory attachments containing the detailed information used in developing this proposal are included in the rulemaking dockets.

Interested persons may also participate in this rulemaking by submitting written comments, preferably in triplicate, to the Regional Administrator, Environmental Protection Agency, Region VIII, Suite 900, 1860 Lincoln Street, Denver, Colorado 80295. Public comments received by December 15, 1978 will be considered in developing the final rule. All comments will be available in the dockets for public inspection.

A public hearing will be held on this proposed rulemaking. The time and place will be announced in a later FEDERAL REGISTER notice.

This notice of proposed rulemaking is issued under the authority of Sections 110, 114, and 301 of the Clean Air Act as amended (42 U.S.C. 7410, 7414, and 7601).

NOTE.—The Environmental Protection Agency has determined that this notice does not propose a significant regulation requiring a regulatory analysis under Executive Order 12044.

Dated: July 28, 1978.

ALAN MERSON,
Regional Administrator.

Part 52 of Chapter I, Title 40 of the Code of Federal Regulations is proposed to be amended as follows:

Subpart BB—Montana

1. In § 52.1370, paragraph (c)(6) is added to read as follows:

§ 52.1370 Identification of plan.

* * * * *

(c) * * *

(6) Sulfur oxides control strategy and compliance schedule for the Anaconda Co. copper smelter in the Helena Intrastate AQCR submitted on October 8, 1975 by the Governor.

2. Section 52.1373 is amended by revising paragraph (a) and adding paragraphs (b), (c), and (d). As amended, § 52.1373 reads as follows:

§ 52.1373 Control strategy: Sulfur oxides.

(a) The requirements of § 51.13 of this chapter are not met since the emission limitation included in the plan for the Anaconda copper smelter located in the Helena Intrastate AQCR is not adequate for attainment and maintenance of the national standards for sulfur oxides in the Helena Intrastate AQCR. Therefore, the October 8, 1975 submission by Montana for that source is disapproved.

(b) *Regulations for control of fugative sulfur oxides emissions (Helena Intrastate Region).* (1) The owner or operator of the Anaconda Co. copper smelter located in Deer Lodge County, Mont., in the Helena Intrastate Region shall utilize engineering practices for reducing the escape of sulfur oxides to the atmosphere, to capture sulfur oxides emissions and pass them through control equipment where feasible, and to vent sulfur oxides emissions from process and control equipment through a stack or stacks. Such practices shall consist of:

(i) Installing and operating exhaust hoods on all active matte tapholes, matte launders, slag tapholes, and slag launders;

(ii) Installing and operating primary exhaust hoods on all active converters and operating such hoods except during pouring and charging operations;

(iii) Operating and maintaining all ducts, flues, and stacks as designed and installed using good operating practice;

(iv) Operating and maintaining all furnaces and converters according to good engineering practices in order to reduce leakage of sulfur oxide gases to atmosphere under normal operating practices; and

(v) Ducting captured sulfur oxides emissions through any stack serving the facility.

(2)(i) The owner or operator of the smelter subject to this paragraph shall comply with the compliance schedule specified below:

(*a*) *September 1, 1979.* Submit a final plan to the Administrator for meeting the requirements of paragraph (b)(1) of this section. Such plan shall be subject to approval by the Administrator.

(*b*) *January 1, 1980.* Let contracts or issue purchase orders for emission capture systems.

(*c*) *June 1, 1980.* Initiate on-site construction and/or installation of emission capture equipment.

(*d*) *September 1, 1981.* Complete on-site construction and/or installation of emission capture systems.

(*e*) *January 1, 1982.* Achieve final compliance with the requirements of paragraph (b)(1) of this section.

(ii) The owner or operator of the smelter subject to this paragraph may submit in writing to the Administrator, no later than thirty (30) days after the effective date of this paragraph, a proposed alternative schedule. As a minimum, any such proposed schedule shall contain the actions specified in paragraph (b)(2)(i)(*a*)-(*e*) of this section. Additionally, no such compliance schedule may provide for final compliance after January 1, 1982. If approved by the Administrator, such compliance schedule shall satisfy the compliance schedule requirements of paragraph (b)(2)(i) of this section for the affected source. If disapproved by the Administrator, the requirements of paragraph (b)(2)(i) of this section shall apply to the affected source.

(iii) The owner or operator of the smelter subject to the requirements of this subparagraph shall certify to the Administrator within five days after the deadline for each increment of progress of the applicable compliance schedule, whether or not the required increment of progress has been met.

(iv) The owner or operator of the smelter subject to this paragraph which is presently in compliance with the requirements of paragraph (b)(1) of this section shall certify such compliance to the Administrator within thirty (30) days of the effective date of this paragraph. The Administrator may request whatever supporting information he considers necessary to determine the validity of the certification. If such certification is acceptable to the Administrator, the requirements of paragraph (b)(2)(i) of this section shall not apply to the certifying source. If such certification is unacceptable to the Administrator, the requirements of paragraph (b)(2)(i) of this section shall apply to the certifying source.

(c) *Regulation for control of sulfur oxides emissions (Helena Intrastate Region).* (1) The owner or operator of the Anaconda Company's copper smelter located in Deer Lodge County, Montana, in the Helena Intrastate region shall not discharge or cause the discharge of sulfur dioxide into the atomosphere in excess of 11,800 pounds per hour (5356 kg/hr) maximum six-hour average as determined by the methods specified in paragraph (c)(4) of this section. Such limitation shall apply to the sum total of sulfur dioxide emissions from the smelter premises, but not including uncaptured fugitive emissions and those emissions due solely to the use of fuel for space heating or steam generation.

(2)(i) The owner or operator of the smelter subject to this paragraph shall comply with the compliance schedule specified below:

(*a*) *September 1, 1979.* Submit a final plan to the Administrator for meeting the requirements of paragraph (c)(1) of this section. Such plan shall be subject to approval by the Administrator.

(*b*) *January 1, 1980.* Let contracts or issue purchase orders for emission control systems and/or process modifications.

(*c*) *June 1, 1980.* Initiate on-site construction and/or installation of emission control equipment and/or process modifications.

(*d*) *September 1, 1981.* Complete on-site construction and/or process modifications.

(*e*) *January 1, 1982.* Achieve final compliance with the requirements of paragraph (c)(1) of this section.

(ii) The owner or operator of the smelter subject to this paragraph may submit in writing to the Administrator, no later than thirty (30) days after the effective date of this paragraph, a proposed alternative compliance schedule. As a minimum, any such proposed schedule shall contain the actions specified in paragraph (c)(2)(i)(*a*)-(*e*) of this section. Additionally, no such compliance schedule may provide for final compliance with paragraph (c)(1) of this section after January 1, 1982. If approved by the Administrator such compliance schedule shall satisfy the compliance schedule requirements of this paragraph for the affected source. If disapproved by the Administrator, the requirements of paragraph (c)(2)(i) of this section shall apply to the affected source.

(iii) The owner or operator of the smelter subject to the requirements of this subparagraph shall certify to the Administrator within five days after the deadline for each increment of progress of the applicable compliance schedule, whether or not the required increment of progress has been met.

(iv) The owner or operator of the smelter subject to this paragraph which is presently in compliance with the requirements of paragraph (c)(1) of this section shall certify such compliance to the Administrator within thirty (30) days of the effective date. Such certification shall include, as a minimum, a performance or stack test, conducted according to the procedures specified in paragraph (c)(4)(ii) of this section, for each stack which emits five percent or more of the total potential (without emissions controls) hourly sulfur oxides emissions from the source. Notice shall be given to the Administrator at least 30 days prior to conducting a performance test(s) to afford him the opportunity to have an observer present. The Administrator may request whatever supporting information he considers necessary to determine the validity of the certification. If such certification is acceptable to the Administrator, the requirements of paragraph (c)(2)(i) of this section shall not apply to the certifying source. If such certification is unacceptable to the Administrator, the requirements of paragraph (c)(2)(i) of this section shall apply to the certifying source.

(3)(i) The owner or operator of the smelter to which this paragraph is applicable shall install, calibrate, maintain, and operate a measurement system(s) for continuously monitoring sulfur dioxide emissions and stack gas volumetric flow rates representative of each stack which emits five percent or more of the total potential (without emission controls) hourly sulfur oxides emissions from the source. For the purpose of this paragraph, "continuous monitoring" means the taking and recording of at least one measurement of sulfur dioxide concentration and stack gas flow rate from the effluent of each affected stack, in each 15-minute period.

(ii) No later than September 1, 1981, and at such other times in the future as the Administrator may specify, the sulfur dioxide concentration measurement system(s) and stack gas volumetric flow rate measurement system(s) intalled and used pursuant to this paragraph shall be demonstrated to meet the measurement system performance specifications prescribed in Appendices D and E to this part, respectively.

(iii) The Administrator shall be notified at least 30 days in advance of the start of the field test period required in Appendices D and E to this part to afford the Administrator the opportunity to have an observer present.

(iv) The sampling point for monitoring emissions shall be in the duct at the centroid of the cross section if the cross sectional area is less than 4.647 m^2 (50 ft^2) or at a point no closer to the wall than 0.914 m (3 ft) if the cross section area is 4.647 m^2 (50 ft^2) of more. The monitor sample point shall be in an area of small spatial concentration gradient and shall be representative of the average concentration of the duct.

(v) The measurement system(s) installed and used pursuant to this section shall be subjected to the manufacturer's recommended zero adjustment and calibration procedures at least once per 24-hour operating period unless the manufacturer(s) specifies or recommends calibration at shorter intervals, in which case such specifications or recommendations shall be followed. Records of these procedures shall be made which clear-

ly show instrument readings before and after zero adjustment and calibration.

(vi) Six-hour average sulfur dioxide emission rates shall be calculated in accordance with paragraph (c)(4) of this section and recorded daily.

(vii) The owner or operator of the smelter subject to this paragraph shall maintain a record of all measurements required by this paragraph. Measurement results shall be expressed as pounds of sulfur dioxide emitted per 6-hour period for those stacks which emit 5 percent or more of the potential (without emission controls) emissions from the facility.

(viii) Six-hour average values calculated pursuant to paragraph (c)(4) of this section shall be reported as of each hour for the preceding 6-hour period. Results shall be summarized monthly and shall be submitted to the Administrator within 15 days after the end of each month. A record of such measurements shall be retained for at least 2 years following the date of such measurements.

(ix) The continuous monitoring and recordkeeping requirements of this subparagraph shall become applicable on September 1, 1981.

(4)(i) Compliance with the requirements of paragraph (c)(1) of this section shall be determined using the continuous measurement system(s) installed, calibrated, maintained and operated in accordance with the requirements of paragraph (c)(3) of this section. For all stacks equipped with the measurement system(s) required by paragraph (c)(3) of this section, a 6-hour average sulfur dioxide emission rate shall be calculated as of the end of each clock hour for the preceding 6 hours in the following manner:

(*a*) Divide each 6-hour into twenty-four 15-minute segments.

(*b*) Determine on a compatible basis a sulfur dioxide concentration and stack gas flow rate for each 15-minute period for all affected stacks. These measurements may be obtained either by continuous integration of sulfur dioxide concentrations and stack gas flow rates (from the respective affected facilities) recorded during the 15-minute period or from the arithmetic average of any number of sulfur dioxide concentration and stack gas flow readings equally spaced over the 15-minute period. In the latter case, the same number of concentration readings shall be taken in each 15-minute period and shall be similarly spaced within each 15-minute period.

(*c*) Calculate the arithmetic average (lbs SO_2/hr) from all twenty-four emission rate measurements in each 6-hour period for each stack.

(*d*) Total the average sulfur dioxide emission rates for all affected stacks.

(ii) Notwithstanding the requirements of paragraph (c)(4)(i) of this section, compliance with the requirements of paragraph (c)(1) of this section shall also be determined by using the methods described below at such times as may be specified by the Administrator. For all stacks equipped with the measurement system(s) required by paragraph (c)(3) of this section, a 6-hour average sulfur dioxide emission rate (lbs SO_2/hr) shall be determined as follows:

(*a*) The test of each stack emission rate shall be conducted while the processing units, venting emissions through such stack, are operating at or above the maximum rate at which they will be operated and under such other relevant conditions as the Administrator shall specify based on representative performance of the smelter units.

(*b*) Concentrations of sulfur dioxide in emissions shall be determined by using Method 8 as described in part 60 of this chapter. The analytical and computational portions of Method 8 as they relate to determination of sulfuric acid mist and sulfur trioxide as well as isokinetic sampling may be omitted from the overall test procedure.

(*c*) Three independent sets of measurements of sulfur dioxide concentrations and stack gas volumetric flow rates shall be conducted during three 6-hour periods for each stack. Each 6-hour period will consist of three consecutive 2-hour tests. Measurements need not necessarily be conducted simultaneously of emissions from all stacks on the smelter premises. All tests must be completed within a 72-hour period.

(*d*) In using Method 8, traversing shall be conducted according to Method 1 as described in part 60 of this chapter. The minimum sampling volume for each 2-hour test shall be 40 cubic feet corrected to standard conditions, dry basis.

(*e*) The volumetric flow rate of the total effluent from each stack evaluated shall be determined by using Method 2 as described in part 60 of this chapter and traversing according to Method 1. Gas analysis shall be performed by using the integrated sample technique of Method 3 as described in part 60 of this chapter. Moisture content shall be determined by use of Method 4 as described in part 60 of this chapter, except that stack gases arising only from a sulfuric acid production unit may be considered to have zero moisture content.

(*f*) The gas sample shall be extracted at a rate proportional to gas velocity at the sampling point.

(*g*) For each 2-hour test, the sulfur dioxide emission rate for each stack shall be determined by multiplying the stack gas volumetric flow rate (ft^3/hr at standard conditions, dry basis) by the sulfur dioxide concentration (lb/ft^3 at standard conditions, dry basis). The sulfur dioxide emission rate in lbs/hr for each stack is determined by calculating the arithmetic average of three independent 6-hour periods, each consisting of three consecutive 2-hour tests.

(*h*) The sum total of sulfur dioxide emissions from the smelter premises in lbs/hr is determined by adding together the emission rates (lbs/hr) from all stacks equipped with the measurement systems required by paragraph (c)(3) of this section.

(iii) A violation of the requirements of paragraph (c)(1) of this section shall occur whenever the total sulfur dioxide emission rate determined according to paragraph (c)(4)(i) or (ii) of this section exceeds the sulfur dioxide emission rate specified in paragraph (c)(1) of this section.

(d) *Compliance with emission standards: Emissions during periods of start-up, shutdown, and malfunction: Copper smelter.* (1) The provisions of this paragraph are applicable to the copper smelter owned and operated by the Anaconda Co. located in Deer Lodge County, Mont., in the Helena Intrastate Air Quality Control Region.

(2) All terms used in this paragraph, but not specifically defined below, shall have the meaning given them in the Clean Air Act or Parts 51, 52, or 60 of this chapter.

(i) The term "excess emissions" means an emission rate which exceeds any applicable emission limitation prescribed by paragraph (c) of this section. The averaging time and test procedures for determining such excess emissions shall be as specified as part of the applicable emission limitation.

(ii) The term "malfunction" means any sudden and unavoidable failure of air pollution control equipment or process equipment or a process to operate in a normal and usual manner.

Failures that are caused entirely or in part by poor maintenance, careless operation, or any other preventable upset condition or preventable equipment breakdown shall not be considered malfunctions.

(iii) The term "start-up" means the setting into operation of any air pollution control equipment or process equipment for any purpose, except routine phasing in of process equipment.

(iv) The term "shutdown" means the cessation of operation of any air pollution control equipment or process equipment for any purpose, except routine phasing out of process equipment.

(v) The term "violation" means any incident of excess emissions, regardless of the circumstances of the occurrence.

(3) The owner or operator of the smelter subject to this paragraph shall notify the Region VIII Office of the Environmental Protection Agency to the attention of the Director, Enforcement Division when the applicable emission limitation in paragraph (c) of this section is not met. Such notification shall be made in writing for each month in which excess emissions occur. Each monthly report shall be submitted within 15 days following the end of each month together with the applicable monthly reports required by paragraph (c)(3)(viii) of this section, and shall include the magnitude, time, and duration of the excess emissions.

(4) In the case of excess emissions from the Anaconda copper smelter for which the Administrator has issued a Notice of Violation the owner or operator of the smelter may submit as a minimum the following data to assist the Administrator in carrying out his statutory responsibility under section 113 of the Clean Air Act:

(i) The identity of the stack and/or other emission points where the excess emissions occured;

(ii) The magnitude of the excess emissions expressed in the units of the applicable emission limitation and the operating data and calculations used in determining the magnitude;

(iii) The time and duration of the excess emissions;

(iv) The identity of the equipment causing the excess emissions;

(v) The nature and cause of such excess emissions;

(vi) If the excess emissions were the result of a malfunction, steps taken to remedy the malfunction and the steps taken or planned to prevent the recurrence of such malfunctions;

(vii) The steps taken to limit the excess emissions; and

(viii) Documentation that the air pollution control equipment, process equipment, or processes were at all times maintained and operated, to the maximum extent practicable, in a manner consistent with good practice for minimizing emissions.

(5) At any time, the owner or operator of the Anaconda smelter has the right to submit data, information or reports to the Administrator, including but not limited to the information specified in paragraph (d)(4) of this section, in order to assist the Administrator in carrying out his statutory responsibilities under Section 113 and 303 of the Clean Air Act.

(6) The submittal of information pursuant to paragraphs (d) (3) and (4) of this section shall be used by the Administrator in determining the nature of the violation, the need for further enforcement action and the appropriate sanctions, if any, under the provisions of the Clean Air Act.

(7) Nothing in this paragraph shall be construed to limit the authority of the Administrator to institute actions under sections 113 and 303 of the Clean Air Act or to exercise his authority under section 114 of the Clean Air Act.

3. Section 52.1375 is amended to read as follows:

§ 52.1375 Attainment dates for national standards.

The following table presents the latest dates by which the national standards will be attained. These dates reflect the information presented in Montana's plan, except where noted.

Air quality control region	Pollutants: Particulate matter, Primary	Particulate matter, Secondary	Sulfur oxides, Primary	Sulfur oxides, Secondary	Nitrogen dioxide	Carbon monoxide	Photochemical oxidants (hydrocarbons)
Billings intrastate	(a)	(a)	(b)	(a)	(c)	(c)	(c)
Great Falls intrastate	(c)	(c)	(a)	(a)	(c)	(c)	(c)
Helena intrastate	(a)	(a)	January 1, 1982	January 1, 1982	(c)	(c)	(c)
Miles City intrastate	(c)	(c)	(c)	(c)	(c)	(c)	(c)
Missoula intrastate	(a)	(a)	(c)	(c)	(c)	(c)	(c)

a 3 years from plan approval or promulgation.
b Air quality levels presently below primary standards.
c Air quality levels presently below secondary standards.

NOTE.—Footnote references which are italicized are proposed by the Administrator because the plan does not provide a specific date.

[FR Doc. 78-25446 Filed 9-8-78; 8:45 am]

[6560-01]

[40 CFR Part 52]

[FRL 984-5]

APPROVAL AND PROMULGATION OF IMPLEMENTATION PLANS

Proposed Rulemaking New Mexico Regulation 506

AGENCY: Environmental Protection Agency (EPA).

ACTION: Proposed rule.

SUMMARY: This action proposes disapproval of New Mexico Regulation 506, Nonferrous Smelters-Particulate Matter. The regulation was revised in order for existing nonferrous smelters in New Mexico to comply with State emission limitation for particulate matter. Disapproval of regulation 506 will prevent relaxation of currently approved emission limits applicable in an area where ambient air quality standards are being exceeded.

DATES: Comments on this proposed rulemaking must be received on or before (October 11, 1978) in order to

be considered by EPA in the final approval/disapproval decision.

ADDRESSES: Written comments should be submitted to the address below: Environmental Protection Agency, Region VI, Air Program Branch, 1201 Elm Street, Dallas, Tex. 75270. Copies of the State's submittal are available for inspection during normal business hours at the above EPA regional office and the address below: Environmental Protection Agency, Public Information Reference Unit, Room 2932, EPA Library, 401 M Street SW., Washington, D.C. 20460.

FOR FURTHER INFORMATION CONTACT:

Anita B. Turpin, Air Program Branch, Environmental Protection Agency, Region VI, 1201 Elm Street, Dallas, Tex. 75270, 214-767-2742.

SUPPLEMENTAL INFORMATION: On March 11, 1977, after adequate notice and public hearing, the Governor of New Mexico submitted revised Regulation 506, Nonferrous Smelter—Particulate Matter, for review and approval by EPA as a part of the State Implementation Plan (SIP).

BACKGROUND

Copies of revised Regulation 506 were provided to applicable Divisions within EPA Region VI for review and comment, and a copy was also sent to the Control Programs Development Division, Office of Air Quality Planning and Standards, Durham, N.C. The comments from these EPA offices centered on three major deficiencies, lack of demonstrated effects of relaxing the particulate emission limits, lack of compliance testing procedures, and the questionable enforceability of the regulation. EPA objections to regulation 506 were summarized in a letter to the State agency on August 25, 1977. The State responded to this letter on September 30, 1977, and Kennecott responded on September 21, 1977, addressing each point raised by EPA. Both responses were reviewed within EPA Region VI to determine if any of the previous objections should be reversed. The concensus was that the initial EPA comments remained valid. The three major deficiencies are discussed in more detail in the following narrative.

ATTAINMENT/MAINTENANCE DEMONSTRATION

The Hurley, New Mexico area where the Kennecott smelter is located was, at the time of submittal of revised Regulation 506, and continues to be a nonattainment area for particulate matter. Violations of the primary ambient air quality standards were recorded at the Hurley monitoring site in 1975, 1976, and 1977 (no violations occurred during the first quarter of 1978). In an analysis prepared by the New Mexico Environmental Improvement Agency in 1977, it was noted that Hurley received the majority of its particulates from point and fugitive emissions from the Kennecott smelter. Since the revised regulation 506 would relax particulate emission limits, a demonstration that such a relaxation would not cause or contribute to a violation of standards is essential before approval could be granted. No demonstration has been provided to EPA. Therefore, the revised regulation is not considered approvable, even if all other requirements were met.

COMPLIANCE TESTING PROCEDURES

The emission limitation in section B of regulation 506 is expressed as a 6-hour average. Since no testing procedures are specified, it is not clear whether six 1-hour samples, two three-hour samples, three 2-hour samples, or one 6-hour sample should be used. Different results may be obtained depending on how many stack tests are averaged over a 6-hour period. For a cyclic operation, six 1-hour samples could be obtained during periods of minimum or maximum emissions. The responses from the State and Kennecott indicate that a sampling procedure is provided in the public hearing transcript. However, this does not make the procedure a requirement of the regulation. It must be submitted to and approved by EPA in order for it to be part of the SIP.

The emission limits in section B are expressed in units of grains per cubic foot of gas measured at stack temperature and pressure. Stack concentrations could be altered by changing the stack gas temperature and pressure. It is possible, therefore, that a grain loading obtained during sampling could be lower than the grain loading produced during normal operation. The emission limit should be specified in terms of grains per dry standard cubic feet of gas.

New Mexico Regulation 100 defines particulate matter to include both solid particles and liquid aerosols. Therefore, a test procedure is required which allows the collection of both solids and liquid aerosols to determine the correct particulate emission rate.

ENFORCEMENT

In section B, it is not clear if all stacks serving the acid plant, reverberatory feed dryer, and fire refining furnace are included, or which stacks serve which processes. No emission limit would apply to stacks not included, if any, and it would not be possible to determine which emission limit applies if there are stacks which serve more than one process. In the Kennecott response, it is stated that all stacks are listed and that no stack serves more than one process. There must be a clear understanding in the regulation, however, as to how compliance is to be determined and when the regulation applies. Without the necessary specificity, the enforceability of regulation 506 is highly questionable.

Since a large portion of emissions from smelters are fugitive emissions, it may be difficult to distinguish between these emissions and those controlled in section B. If a smelter operator elected to stop using one or more stacks and allow the emissions to become fugitive, no emission limit would apply since "captured fugitive emissions" are exempted from control under section C. In its response, Kennecott maintains that fugitive emissions must be captured and vented as a requirement of a sulfur oxides regulation promulgated for Kennecott by EPA. This regulation which addressed sulfur oxides fugitive emissions, was proposed for promulgation by EPA on May 2, 1975 (40 FR 19213), but it was never promulgated. Clearly then, there is no requirement for capturing and venting fugutive emissions. While such an operation may not be practical, the particulate regulation should also specifically prohibit the "bypassing" operation.

Section E of Regulation 506 postpones applicability of Regulation 705, Schedules of Compliance, dependent on a determination by the "Board" as specified in section G. A determination by the "Board" can be made anytime after a hearing, which is referenced in section F. Kennecott maintains that the time limit for such a determination is on or before June 30, 1978, which is specified in section F. However, this is the time limit for providing information at a hearing which must be authorized by the "Board", and not the time limit for the "Board" to make its determination. The effect could be an indefinite postponement of regulation 705 as it applies to existing smelters, and the implementation of section D.

CURRENT ACTION

Because of the deficiencies explained above, EPA does not consider regulation 506, as submitted by the Governor on March 11, 1977, to be approvable. Therefore, regulation 506 is being proposed for disapproval.

The notice of proposed rulemaking is issued under the authority of Section 110(a) of the Clean Air Act, as amended, 42 U.S.C. 7410-(a).

Dated: August 23, 1978.

ADLENE HARRISON,
Regional Administrator.

It is proposed to amend Part 52 of Charter I, Title 40 of the Code of Federal Regulations as follows:

Subpart GG—New Mexico

1. In § 52.1620, paragraph (c) is amended by adding a new paragraph (10) as follows:

§ 52.1620 Identification of plan.

* * * * *

(c) * * *

(10) Regulation 506, Non-ferrous Smelters—Particulate Matter, which was amended by the State on December 10, 1976, was submitted by the Governor as a revision to the State Implementation Plan on March 11, 1977 (see § 52.1625).

2. In Subpart GG, § 52.1625 is revised to read as follows:

§ 52.1625 Control Strategy and regulations: Particulate Matter.

(a) The requirements of § 51.13 of this chapter are not met since the plan does not provide for attainment and maintenance of the national standards for particulate matter in New Mexico's portion of the El Paso-Las Cruces-Alamogordo Interstate Region.

(b) Regulation 506, submitted by the Governor on March 11, 1977, is disapproved since no air quality impact was provided, no compliance, testing procedures were specified, and since the enforceability of the regulation is questionable. Regulation 506, as adopted January 10, 1972, remains a requirement of the Implementation Plan.

[FR Doc. 78-25550 Filed 9-8-78; 8:45 am]

[6560-01]

[40 CFR Part 65]

[FRL 963-4; Docket No. A-SS-78-647]*

AIR QUALITY IMPLEMENTATION PLANS; ENFORCEMENT BY STATE AND FEDERAL GOVERNMENTS AFTER STATUTORY DEADLINES

Proposed Delayed Compliance Order for Veterans Home and Hospital, Rocky Hill, Conn.

AGENCY: Environmental Protection Agency.

ACTION: Proposed rule.

SUMMARY: EPA proposes to issue an administrative order to the Veterans Home and Hospital. The order requires the hospital to bring air emissions from its incinerator in Rocky Hill, Conn. into compliance with certain regulations contained in the federally-approved Connecticut State Implementation Plan (SIP). Because the hospital is unable to comply with these regulations at this time, the proposed order would establish an expeditious schedule requiring final compliance by December 20, 1978. Source compliance with the order would preclude suits under the Federal enforcement and citizen suit provision of the Clean Air Act for violation of the SIP regulations covered by the order. The purpose of this notice is to invite public comment and to offer an opportunity to request a public hearing on EPA's proposed issuance of the order.

DATES: Written comments must be received on or before October 11, 1978, and requests for a public hearing must be received on or before September 26, 1978. All requests for a public hearing should be accompanied by a statement of why the hearing would be beneficial and a text or summary of any proposed testimony to be offered at the hearing. If there is significant public interest in a hearing, it will be held after 21 days prior notice of the date, time, and place of the hearing has been given in this publication.

ADDRESS: Comments and requests for a public hearing should be submitted to Director, Enforcement Division, EPA, Region I, J.F.K. Federal Building, Room 2103, Boston, Mass. 02203. Material supporting the order and public comments received in response to this notice may be inspected and copied (for appropriate charges) at this address during normal business hours.

FOR FURTHER INFORMATION CONTACT:

Attorney Thomas Engellenner at 617-223-5470 or Engineer Steve Fradkoff at 617-223-5610. Their address is U.S. Environmental Protection Agency, J.F.K. Federal Building, Room 2103, Boston, Mass. 02203.

SUPPLEMENTARY INFORMATION: Veterans Home and Hospital operates a hospital at Rocky Hill, Conn. The proposed order addresses emissions from the incinerator at this facility, which is subject to section 19-508-18(c)(3) of the Connecticut Regulations for the Abatement of Air Pollution. The regulation limits the emissions of particulates and fly ash, and is part of the federally-approved Connecticut State Implementation Plan. The order required final compliance with the regulation by December 20, 1978, and the source has consented to its terms. The hospital has awarded a contract for a new incinerator and has also agreed to meet all other increments in the order.

The proposed order satisfies the applicable requirements of section 113(d) of the Clean Air Act (the Act). If the order is issued, source compliance with its terms would preclude further EPA enforcement action under section 113 of the Act against the source for violations of the regulation covered by the order during the period the order is in effect. Enforcement against the source under the citizen suit provisions of the Act (section 304) would be similarly precluded. Comments received by the date specified above will be considered in determining whether EPA should issue the order. Testimony given at any public hearing concerning the order will also be considered. After the public comment period and any public hearing, the Administrator of EPA will publish in the FEDERAL REGISTER the Agency's final action on the order in 40 CFR Part 65.

The provisions of 40 CFR part 65 will be promulgated by EPA soon, and will contain the procedure for EPA's issuance, approval, and disapproval of an order under section 113(d) of the Act. In addition, part 65 will contain sections summarizing orders issued, approved, and disapproved by EPA. A prior notice proposing regulations for part 65, published at 40 FR 14876 (April 2, 1975), will be withdrawn, and replaced by a notice promulgating these new regulations.

(42 U.S.C. 7413, 7601)

Dated: September 1, 1978.

WILLIAM R. ADAMS, Jr.,
Regional Administrator,
Region I.

In consideration of the foregoing, it is proposed to amend 40 CFR Chapter I, as follows:

PART 65—DELAYED COMPLIANCE ORDERS

1. By adding § 65.110 to read as follows:

§ 65.110 Federal delayed compliance orders issued under section 113(d)(1), (3), and (4) of the Act.

Order No. A-SS-78-647.

U.S. ENVIRONMENTAL PROTECTION AGENCY.—REGION I

In the Matter of Veterans Home and Hospital, Rocky Hill, Conn., proceedings under section 113 of the Clean Air Act, 42 U.S.C. 7413, Order No. A-SS-78-647.

This order is issued pursuant to section 113(d)(1) of the Clean Air Act (the "Act"), 42 U.S.C. 7413(d). This order contains a schedule for compliance, interim requirements, and reporting requirements. Public notice, opportunity for a public hearing, and thirty days notice to the State of Connecticut have been provided pursuant to section 113(d)(1) of the Act.

FINDINGS

1. Section 19-508-18-(c)(3)(i) of the Connecticut regulations for the abatement of air pollution ("Regulations") reads in pertinent part:

No person shall use or cause to be used any existing incinerator which will emit more than four-tenths pound of particulates per thousand pounds of flue gases adjusted to fifty percent excess air.

2. In addition, section 19-503-18(c)(3)(iii) of the regulations states:

No person shall cause, suffer, allow or permit the emission of particulates of unburned waste or ash from any incinerator

---

*Optional.

which are individually large enough to be discernible by the human eye.

3. Sections 19-508-18(c)(3)(i) and 19-508-18(c)(3)(iii) of the regulations are part of the implementation plan submitted to and approved by the Environmental Protection Agency ("EPA") pursuant to section 110 of the Act. These sections are, therefore, a "requirement of an applicable implementation plan" as that phrase is used in section 113(a)(1) of the Act.

4. The Veterans Home and Hospital ("Veterans Hospital") in Rocky Hill, Conn., operates an incinerator which emits particulates and unburned fly ash. Emissions from incinerators are subject to limitations contained in section 19-508-18(c)(3) of the regulations.

5. On February 24, 1978, an EPA engineer observed fly ash emissions in violation of 19-508-18(c)(3)(iii) and later estimated that particulate emissions from the incinerator exceeded the limits set forth in 19-508-18(c)(3)(i) by a factor of almost seven. On May 2, 1978, the Regional Administrator issued a notice of violation to the veterans hospital alleging violations of the above cited regulations.

6. Representatives of the Veterans Hospital were offered an opportunity to confer with EPA concerning the alleged violation, in accordance with section 113(a)(1) of the Act. The conference was held on May 22, 1978.

7. On June 7, 1978, the Veterans Hospital sent a letter informing EPA that it had not yet installed a new incinerator. Therefore, EPA finds that the violations of sections 19-508-18(c)(3)(i) and 19-508-18(c)(3)(iii) have continued for more than thirty days beyond Veterans Hospital's receipt of the notice of violation.

ORDER

After a thorough investigation of all relevant facts, including public comment, it is determined that the schedule for compliance set forth in this order is as expeditious as practicable, and that the terms of this order comply with section 113(d) of the Act.

It is hereby ordered,

I. That the Veterans Home and Hospital shall comply with the Connecticut implementation plan regulations in accordance with the following schedule for implementation of plans for a new incinerator for the waste generated by the hospital on or before the date specified:

A. Award contract for an incinerator by June 20, 1978, or ten days after receipt of this order, whichever is later.

B. Complete site preparation for new incinerator by October 9, 1978.

C. Accept delivery of a new incinerator and begin installation by November 6, 1978.

D. Begin full operation of incinerator by November 20, 1978.

E. Conduct an emission test on the new incinerator by December 20, 1978 in accordance with EPA methods 1-5 test procedures (40 CFR Part 60, Appendix A).

F. Submit a copy of the emissions test report to EPA by January 20, 1979.

II. That the Veterans Home and Hospital shall comply with the following interim requirement which is determined to be the best reasonable and practicable interim system of emission reduction (taking into account the requirement for which compliance is ordered in Section I, above), and is necessary to avoid an imminent and substantial endangerment to the health of persons and to assure compliance with sections 19-508-18(c)(3)(i) and 19-508-18(c)(3)(iii) of the regulations insofar as the veterans home and hospital is able to comply during the period this order is in effect:

A. Change charging methods of the existing incinerator to reflect higher burning temperatures in order to reduce fly ash and particulate emissions.

III. That the Veterans Home and Hospital not relieved by this order from compliance with any requirements imposed by the applicable State implementation plan, EPA, and/or the courts pursuant to section 303 of the act during any period of imminent and substantial endangerment to the health of persons.

IV. Nothing herein shall affect the responsibility of the veterans home and hospital to comply with State, local, or other Federal regulations.

V. That while section 113(d)(1)(C) of the Act normally requires an order to include emission monitoring, no reasonable or economical system of emission monitoring exists for the Veterans Hospital's present incinerator since a new incinerator will be in use by November 1978.

VI. Veterans Home and Hospital is hereby notified that failure to achieve final compliance by July 1, 1979 may result in a requirement to pay a noncompliance penalty under section 120 of the Act. In the event of such failure, Veterans Home and Hospital will be formally notified, pursuant to section 120(b)(3) and any regulations promulgated thereunder, of its noncompliance.

VII. This order shall be terminated in accordance with section 113(d)(8) of the act if the Administrator determines on the record, after notice and hearing that an inability to comply with sections 19-508-18(c)(3)(i) and 19-508-18(c)(3)(iii) of the regulations no longer exists.

VIII. Violation of any requirement of this order shall result in one or more of the following actions:

A. Enforcement of such requirements pursuant to section 113(a), (b), or (c) of the Act, including possible judicial action for an injunction and/or penalties and, in appropriate cases, criminal prosecution.

B. Revocation of this order, after notice and opportunity for a public hearing, and subsequent enforcement of sections 19-508-18(c)(3)(i) and 19-508-18(c)(3)(iii) of the regulations in accordance with the preceeding paragraph.

C. If such violation occurs on or after July 1, 1979, notice of noncompliance and subsequent action pursuant to section 120 of the Act.

IX. This order is effective September 11, 1978.

Date: ———.

DOUGLAS M. COSTLE,
Administrator.

The Veterans Home and Hospital of Rocky Hill, Conn., finding that the compliance schedule in this order is reasonable and practicable, hereby consents to the issuance of this order and will undertake to comply with all of its terms and conditions.

Dated: August 4, 1978.

ROBERT J. BECKWITH,
Commandant.

[FR Doc. 78-25555 Filed 9-8-78; 8:45 am]

[6560-01]

[40 CFR Part 65]

[FRL 964-4; Docket No. ——] [1]

AIR QUALITY IMPLEMENTATION PLANS; ENFORCEMENT BY STATE AND FEDERAL GOVERNMENTS AFTER STATUTORY DEADLINES

Proposed Approval of an Administrative Order Issued by Hammond Air Pollution Control Department to Steel Containers Inc., d.b.a. Calumet Containers

AGENCY: Environmental Protection Agency.

ACTION: Proposed rule.

SUMMARY: EPA proposes to approve an administrative order issued by the Hammond Air Polution Control Department to Steel Containers Inc., d.b.a. Calumet Containers. The order requires the company to bring air emissions from its drum reclamation incinerator in Hammond, Ind., into compliance with certain regulations contained in the federally approved Indiana State Implementation Plan (SIP) by October 30, 1978. Because the order has been issued to a major source and permits a delay in compliance with provisions of the SIP, it must be approved by EPA before it becomes effective as a delayed compliance order under the Clean Air Act (the Act). If approved by EPA, the order will constitute an addition to the SIP. In addition, a source in compliance with an approved order may not be sued under the Federal enforcement or citizen suit provisions of the Act for violations of the SIP regulations covered by the order. The purpose of this notice is to invite public comment on EPA's proposed approval of the order as a delayed compliance order.

DATE: Written comments must be received on or before October 11, 1978.

ADDRESSEES: Comments should be submitted to Director, Enforcement Division, U.S. EPA, Region V, 230 South Dearborn Street, Chicago, Ill. 60604. The State order, supporting material, and public comments received in response to this notice may be inspected and copied (for appropriate charges) at this address during normal business hours.

FOR FURTHER INFORMATION CONTACT:

Anne Swofford, Attorney, Enforcement Division, U.S. EPA, Region V, 230 South Dearborn Street, Chicago, Ill. 60604, 312-353-2082.

SUPPLEMENTARY INFORMATION: Steel Containers Inc., d.b.a. Calumet Containers, operates a drum reclamation incinerator at Hammond, Ind.

[1] Optional.

The order under consideration addresses emissions from the facility, which are subject to State of Indiana Regulations APC-7 and APC-16. The regulations limit the emissions of particulate matter and carbon monoxide and is part of the federally approved Indiana SIP. The order requires final compliance with the regulation by October 30, 1978, through operation of its drum reclamation incinerator at a production maximum of 1,000 barrels per day. The source has consented to the terms of the order.

Because this order has been issued to a major source of particulate matter and carbon monoxide emissions and permits a delay in compliance with the applicable regulation, it must be approved by EPA before it becomes effective as a delayed compliance order under section 113(d) of the Act. EPA may approve the order only if it satisfies the appropriate requirements of this subsection. Region V has determined that this order has been issued in accordance with the requirements of the Act. However, the order does not require continuous emission monitoring of either visible emissions of temperature for the drum reclamation incinerator. Region V has concluded that such a requirement would impose an undue burden on the source and has determined that alternative satisfactory means of insuring compliance have been provided in the order through a schedule of substantial fines to be imposed for non-compliance. If the order is approved by EPA, source compliance with its terms would preclude Federal enforcement action under Section 113 of the Act against the source for violations of the regulations covered by the order during the period the order is in effect. Enforcement against the source under the citizen suit provision of the Act (Section 304) would be similarly precluded. If approved, the order would also constitute an addition to the Indiana SIP.

All interested persons are invited to submit written comments on the proposed order. Written comments received by the date specified above will be considered in determining whether EPA may approve the order. After the public comment period, the Administrator of EPA will publish in the FEDERAL REGISTER the Agency's final action on the order in 40 CFR Part 65.

The provisions of 40 CFR Part 65 will be promulgated by EPA soon, and will contain the procedure for EPA's issuance, approval, and disapproval of orders under section 113(d) of the Act. In addition, Part 65 will contain sections summarizing orders issued, approved, and disapproved by EPA. A prior notice proposing regulations for Part 65, published at 40 FR 14876 (April 2, 1975), will be withdrawn, and replaced by a notice promulgating these new regulations.

(42 U.S.C. 7413, 7601.)

Dated: June 28, 1978.

THOMAS E. YEATES,
Acting Regional Administrator, Region V.

[FR Doc. 78-25549 Filed 9-8-78; 8:45 am]

[6560-01]

[40 CFR Part 180]

[FRL 963-6; PP 7E1973/P66]

TOLERANCES AND EXEMPTIONS FROM TOLERANCES FOR PESTICIDE CHEMICALS IN OR ON RAW AGRICULTURAL COMMODITIES

Proposed Tolerances for the Pesticide Chemical 2,6-Dichloro-4-Nitroaniline

AGENCY: Office of Pesticide Programs, Environmental Protection Agency (EPA).

ACTION: Proposed rule.

SUMMARY: This notice proposes that the fungicide 2,6-dichloro-4-nitroaniline be used on endive (escarole). The proposal was submitted by the Interregional Research Project No. 4. This amendment will establish a maximum permissible level for residues of the fungicide on endive.

DATE: Comments must be received on or before October 11, 1978.

ADDRESS COMMENTS TO: Federal Register Section, Technical Services Division (WH-569), Office of Pesticide Programs, EPA, Room 401, East Tower, 401 N Street SW., Washington, D.C. 20460.

FOR FURTHER INFORMATION CONTACT:

Mrs. Patricia Critchlow, Registration Division (WH-567), Office of Pesticide Programs, EPA, 202-755-2516.

SUPPLEMENTARY INFORMATION: Dr. C. C. Compton, Interregional Research Project No. 4, New Jersey Agricultural Experiment Station, P.O. Box 231, Rutgers University, New Brunswick, N.J. 08903, on behalf of the IR-4 Technical Committee and the Agricultural Experiment Station of New York has submitted a pesticide petition (PP 7E1973) to the EPA. This petition requests that the Administrator propose that 40 CFR 180.200 be amended by the establishment of a tolerance for residues of the fungicide 2,6-dichloro-4-nitroaniline in or on the raw agricultural commodity endive (escarole) at 10 parts per million (ppm).

The data submitted in the petition and other relevant material have been evaluated. The pesticide is considered useful for the purpose for which tolerances are sought, and it is concluded that the tolerance of 10 ppm established by amending 40 CFR 180.200 will protect the public health.

The toxicological data considered in support of the proposed tolerance included 2-year rat and dog feeding studies with a no-effect level (NEL) at 100 ppm, a 2-year multigeneration rat reproduction study with an NEL at 100 ppm, a rabbit teratology study with an NEL at 1,000 ppm, and human volunteer oral ingestion NEL at 10 milligrams/day for 3 months. The acceptable daily intake (ADI) of the fungicide is 0.025 milligram/kilogram/day.

Since escarole is used as a substitute for lettuce, the amount of fungicide added to the dietary load is expected to be zero. Furthermore, since no additional theoretical exposure is expected, no additional toxicity testing, i.e., carcinogenicity or mutagenicity, is being required.

Adequate analytical methods (colorimetry and gas chromatography) are available for enforcement purposes. Tolerances have previously been established (40 CFR 180.200) for residues of the fungicide on a variety of raw agricultural commodities at levels ranging from 20 ppm to 0.1 ppm.

There is no reasonable expectation of residues in eggs, meat, milk, or poultry, as delineated in 40 CFR 180.6(a)(3). It is proposed, therefore, that the tolerance be established as set forth below.

Any person who has registered, or submitted an application for the registration of a pesticide under the Federal Insecticide, Fungicide, and Rodenticide Act which contains any of the ingredients listed herein may request, on or before October 11, 1978, that this rulemaking proposal be referred to an advisory committee in accordance with section 408(e) of the Federal Food, Drug, and Cosmetic Act.

Interested persons are invited to submit written comments on the proposed regulation. Copies of the comments should be submitted to facilitate the work of the Agency and of others interested in inspecting them. The comments must bear a notation indicating both the subject and the petition/document control number, "PP7E1973/P66". All written comments filed in response to this notice of proposed rulemaking will be available for public inspection in the office of the Federal Register from 8:30 a.m. to 4 p.m. Monday through Friday.

Dated: September 5, 1978.

(Sec. 408(e) of the Federal Food, Drug, and Cosmetic Act (21 U.S.C. 346a(e)).)

DOUGLAS D. CAMPT,
Acting Director, Registration Division.

It is proposed that Part 180, Subpart C, § 180.200 be revised in its entirety by editorially reformatting the section into an alphabetized columnar listing

and alphabetically inserting the new tolerance of .10 ppm on escarole (endive) as follows:

§ 180.200 2,6-dichloro-4-nitroaniline; tolerances for residues.

Tolerances are established for residues of the fungicide 2,6-dichloro-4-nitroaniline in or on the following raw agricultural commodities:

Commodity	Parts per million
Apricots	20
Beans, snap	20
Blackberries	15
Boysenberries	15
Carrots (POST-H)	10
Celery	15
Cherries, sweet (PRE- & POST-H)	20
Cottonseed	0.1
Cucumbers	5
Endive (escarole)	10
Garlic	5
Grapes	10
Lettuce	10
Nectarines	20
Onions	5
Peaches	20
Plums (fresh prunes) (PRE- & POST-H)	15
Potatoes	0.25
Raspberries	15
Rhubarb	10
Sweet potatoes	10
Tomatoes	5

Unless otherwise specified, the tolerances prescribed in this section provide for residues from preharvest application only.

[FR Doc. 78-25553 Filed 9-8-78; 8:45 am]

[6820-23]

GENERAL SERVICES ADMINISTRATION

Public Buildings Service

[41 CFR Part 101-20]

MANAGEMENT OF BUILDINGS AND GROUNDS

Smoking in GSA-Controlled Buildings and Facilities

AGENCY: Public Buildings Service, General Services Administration.

ACTION: Proposed rule.

SUMMARY: This regulation prohibits smoking in certain areas of buildings controlled by GSA. It has become necessary to regulate smoking in certain areas of Federal buildings because smoke in a confined area may be irritating and annoying to nonsmokers and may create a potential hazard to those suffering from heart and respiratory diseases or allergies. The intent of this regulation is to provide a reasonably smoke-free environment in certain areas for those working and visiting in GAS-controlled buildings.

DATE: Comments must be received on or before October 11, 1978.

ADDRESS: Comments should be addressed to the General Services Administration (PBOP), Washington, D.C. 20405.

FOR FURTHER INFORMATION CONTACT:

Mr. Donald Winegarden, Director, Operations Division, Office of Buildings Management, General Services Administration, Washington, D.C. 20405, 202-566-1563.

Subpart 101-20.1 Building Operations, Maintenance, Protection, and Alterations

Section 101-20.109-10 is revised to read as follows:

§ 101-20.109-10 Regulations of smoking.

Regulation for controlling smoking in GSA-controlled buildings and facilities are set forth below. Agencies are encouraged to develop additional guidelines for internal use and for taking appropriate administrative action when violations of these regulations occur.

(a) Smoking is prohibited in the following areas:

(1) *Auditoriums, classrooms, and conference rooms.* Buildings managers shall insure that signs and adequate receptacles for smoking refuse are placed outside the entrances to auditoriums, classrooms, and conference rooms.

(2) *Elevators.* "No smoking" signs shall be posted in elevators, and adequate receptacles shall be placed outside the entrances.

(3) *Shuttle vehicles.*

(4) *Hazardous areas.* Each agency shall post and enforce "no smoking" rules in any location under its jurisdiction which involves flammable liquids, flammable gases, or flammable vapors, or in all other locations where there is a collection of readily ignitible, combustible materials.

(b) Smoking is not permitted in libraries, except in those non-stack areas that are designated as "smoking" areas. These areas shall be established by the buildings manager in collaboration with the heads of the occupant agencies.

(c) An employee who occupies a private office is authorized to declare that office a "no smoking" area.

(d) "No smoking" areas shall be established in cafeterias. These areas shall be designated as "no smoking" areas by each building manager, in collaboration with the heads of the occupant agencies. The areas designated shall be based upon an estimate of the number of smoking and nonsmoking patrons served. This may be adjusted on the basis of local experience. The "no smoking" areas shall be identified by appropriate signs.

(e) The establishment of "no smoking" work areas in open space should be thoroughly investigated. Supervisors should plan work space in a manner so that employees who desire a "no smoking" area can be accommodated: *Provided,* That: (1) Efficiency of work units will not be impaired, (2) additional space will not be required, and (3) costly alterations to the space or procurement of additional office equipment will not be necessary. Agencies are responsible for insuring that "no smoking" areas are identified by appropriate signs. In establishing and continuing a smoking policy in work areas under their jurisdiction, supervisors should strive to maintain an equitable balance between the rights of nonsmokers and those of smokers.

(f) In medical care facilities such as medical clinics and health units, smoking is restricted to visitor waiting areas, staff lounges, private offices, and specially designated areas. Waiting areas shall be divided into areas designated as "smoking" and "no smoking" whenever possible.

(g) Agencies are responsible for providing adequate noncombustible ash trays or receptacles in locations where smoking is permitted.

(Sec. 205(c), 63 Stat. 390 (40 U.S.C. 486(c))

Dated: August 25, 1978.

JAMES B. SHEA, Jr.,
Commissioner,
Public Buildings Service.

[FR Doc. 78-25407 Filed 9-6-78; 11:03 am]

[1505-01]

DEPARTMENT OF TRANSPORTATION

Coast Guard

[46 CFR Part 151, 153]

[CGD 75-075]

BENZENE CARRIAGE REQUIREMENTS

Proposed Rulemaking

Correction

In FR Doc. 78-23405 appearing on page 37149 in the issue of Monday, August 21, 1978, in the third column, the first line in § 151.50-60 should read, "The licensed officer or certificated [tankerman] * * *".

[6712-01]

FEDERAL COMMUNICATIONS COMMISSION

[47 CFR Part 73]

[BC Docket No. 78-273; RM-3076]

TV BROADCAST STATION IN OKOLONA, MISS.

Proposed Changes in Table of Assignments

AGENCY: Federal Communications Commission.

ACTION: Notice of proposed rulemaking.

SUMMARY: Action taken herein proposes the assignment of a first UHF

television channel to Okolona, Miss. Petitioner, Southern Television Corp., states the channel could be used to bring a first local television service to the community.

DATES: Comments must be filed on or before October 24, 1978. Reply comments must be filed on or before November 13, 1978.

ADDRESS: Federal Communications Commission, Washington, D.C. 20554.

FOR FURTHER INFORMATION CONTACT:

Mildred B. Nesterak, Broadcast Bureau, 202-632-7792.

SUPPLEMENTARY INFORMATION:

Adopted: August 24, 1978

Released: August 30, 1978.

In the matter of amendment of § 73.606(b), *Table of Assignments*, television broadcast stations (Okolona, Miss.), BC Docket No. 78-273, RM-3076.

1. The Commission has under consideration a petition for rulemaking, seeking amendment of § 73.606(b) of the Commission's rules, the television table of assignments. The petition was filed by Southern Television Corp. ("petitioner"), requesting the assignment of UHF channel 49 to Okolona, Miss. Comments were filed by the Association of Maximum Service Telecasters, Inc. ("AMST").

2. According to petitioner, Okolona (population 3,002)[1] has experienced a 14.5 percent increase in population between 1960 and 1970 and by 1977 the city had grown to 3,500 residents. Okolona, one of two county seats of Chichasaw County (population 16,805), is located in northeast Mississippi, approximately 32 kilometers (20 miles) south of Tupelo, Miss.

3. Petitioner states the county's industry is dominated by furniture and fixture companies which account for over half of the employed county labor force. It notes that apparel and fabrics also account for a significant segment of the county's industrial activities.

4. Although Okolona is located within the grade B contours of television stations located some distance away, it does not have a local television broadcast station. The county has one television assignment (channel 45) at Houston (population 2,720), unoccupied and unapplied for.

5. AMST, in its comments, indicates that a short spacing of 6.23 kilometers (3.87 miles) exists between the reference coordinates for Okolona and the reference coordinates for channel 45 in Houston, Miss. However, it states that because petitioner has proposed a site which meets the spacing requirements, it does not oppose the proposal of channel 49 to Okolona. It adds that if the Commission does make the assignment, it should state that the channel must be used at a site which meets all minimum separation requirements.

6. We are persuaded that sufficient public interest showing has been made warranting further consideration of petitioner's proposal in a rulemaking proceeding. Channel 49 can be assigned in compliance with the distance separation requirements and other technical criteria provided the transmitter site is located at least 6.23 kilometers (3.87 miles) northeast of Okolona. The channel assignment would provide the community an opportunity to acquire its first local television station. Therefore, we propose to consider the following revision in the television table of assignments. (§ 73.606(b) of the rules) with respect to the community listed below:

City and Channel No.

Okolona, Miss., present,—; proposed, 49.

7. The Commission's authority to institute rulemaking proceedings, showings required, cutoff procedures, and filing requirements are contained in the attached appendix and are incorporated by reference herein.

NOTE.—A showing of continuing interest is required by paragraph 2 of the appendix before a channel will be assigned.

8. Interested parties may file comments on or before October 24, 1978, and reply comments on or before November 13, 1978.

FEDERAL COMMUNICATIONS COMMISSION,
MARTIN I. LEVY,
Acting Chief,
Broadcast Bureau.

APPENDIX

1. Pursuant to authority found in sections 4(i), 5(d)(1), 303 (g) and (r), and 307(b) of the Communications Act of 1934, as amended, and § 0.281(b)(6) of the Commission's rules, it is proposed to amend the TV table of assignments, § 73.606(b) of the Commission's rules and regulations, as set forth in the notice of proposed rulemaking to which this appendix is attached.

2. *Showings required.* Comments are invited on the proposal(s) discussed in the notice of proposed rulemaking to which this appendix is attached. Proponent(s) will be expected to answer whatever questions are presented in initial comments. The proponent of a proposed assignment is also expected to file comments even if it only resubmits or incorporates by reference its former pleadings. It should also restate its present intention to apply for the channel if it is assigned, and, if authorized, to build the station promptly. Failure to file may lead to denial of the request.

3. *Cutoff procedures.* The following procedures will govern the consideration of filings in this proceeding.

(a) Counterproposals advanced in this proceeding itself will be considered, if advanced in initial comments, so that parties may comment on them in reply comments. They will not be considered if advanced in reply comments. (See § 1.420(d) of Commission rules.)

(b) With respect to petitions for rulemaking which conflict with the proposal(s) in this notice, they will be considered as comments in the proceeding, and public notice to this effect will be given as long as they are filed before the date for filing initial comments herein. If they are filed later than that, they will not be considered in connection with the decision in this docket.

4. *Comments and reply comments; service.* Pursuant to applicable procedures set out in §§ 1.415 and 1.420 of the Commission's rules and regulations, interested parties may file comments and reply comments on or before the dates set forth in the notice of proposed rulemaking to which this appendix is attached. All submissions by parties to this proceeding or persons acting on behalf of such parties must be made in written comments, reply comments, or other appropriate pleadings. Comments shall be served on the petitioner by the person filing the comments. Reply comments shall be served on the person(s) who filed comments to which the reply is directed. Such comments and reply comments shall be accompanied by a certificate of service. (See § 1.420 (a), (b), and (c) of the Commission's rules.)

5. *Number of copies.* In accordance with the provisions of section 1.420 of th Commission's rules and regulations, an original and four copies of all comments, reply comments, pleadings, briefs, or other documents shall be furnished the Commission.

6. *Public inspection of filings.* All filings made in this proceeding will be available for examination by interested parties during regular business hours in the Commission's public reference room at its headquarters, 1919 M Street NW., Washington, D.C.

[FR Doc. 78-25473 Filed 9-8-78; 8:45 am]

[1] Population figures are taken from the 1970 U.S. Census, unless otherwise indicated.

[6712-01]

[47 CFR Part 73]

[BC Docket No.78-207]

TV BROADCAST STATIONS IN MIAMI AND WEST PALM BEACH, FLA.

Order Extending Time for Filing Comments and Reply Comments

AGENCY: Federal Communications Commission.

ACTION: Order extending time.

SUMMARY: Action taken herein extends the time for filing comments and reply comments in a proceeding involving the substitution of a UHF TV channel in Miami, Fla. Coral Television Corp. states that it needs additional time to prepare a market impact analysis.

DATES: Comments must be received on or before September 18, 1978, and reply comments must be received on or before October 10, 1978.

ADDRESS: Federal Communications Commission, Washington, D.C. 20554.

FOR FURTHER INFORMATION CONTACT:

Mark N. Lipp, Broadcast Bureau, 202-632-7792.

SUPPLEMENTARY INFORMATION:

Adopted: August 31, 1978.

Released: September 1, 1978.

In the matter of Amendment of § 73.606(b), *Table of Assignments*, television broadcast stations (Miami and West Plam Beach, Fla., BC Docket No. 78-207

1. On July 6, 1978, the Commission adopted a notice of proposed rulemaking, 43 FR 30841, proposing to substitute UHF TV channel 64 for UHF TV channel 39 at Miami, Fla. The proceeding was instituted by the Commission on its own its own motion. The dates for filing comments and reply comments are September 4, and September 25, 1978, respectively.

2. Coral Television Corp., licensee of station WCIX-TV, Miami, has requested a 2-week extension to September 18, 1978, for filing comments. Coral states that it is conducting analyses of the overall market impact of the proposal. It asserts that due to unavoidable demands on its personnel and the pre-labor Day vacations, a brief extension is necessary.

3. Under the circumstances, the Commission believes that an extension should be granted to enable Coral to file information which could be helpful to the Commission in resolving this proceeding. A new filing deadline will also be set for filing reply comments to accommodate the new comment deadline.

4. Accordingly, *it is ordered*, That the dates for filing comments and reply comments are extended through September 18 and October 10, respectively.

5. This action is taken pursuant to authority found in sections 4(i), 5(d)(1), and 303(r) of the Communications Act of 1934, as amended, and § 0.281 of the Commission's rules.

FEDERAL COMMUNICATIONS COMMISSION,
WALLACE E. JOHNSON,
Chief, Broadcast Bureau.

[FR Doc. 78-25474 Filed 9-8-78; 8:45 am]

notices

This section of the FEDERAL REGISTER contains documents other than rules or proposed rules that are applicable to the public. Notices of hearings and investigations, committee meetings, agency decisions and rulings, delegations of authority, filing of petitions and applications and agency statements of organization and functions are examples of documents appearing in this section.

[6110-01]

ADMINISTRATIVE CONFERENCE OF THE UNITED STATES

COMMITTEE ON GRANTS, BENEFITS AND CONTRACTS

Meeting

Pursuant to the Federal Advisory Committee Act (Pub. L. 92-463), notice is hereby given of a meeting of the Committee on Grants, Benefits and Contracts of the Administrative Conference of the United States, to be held at 2:30 p.m., Tuesday, September 26, 1978, in the Conference's library, 2120 L Street NW., Suite 500, Washington, D.C.

The Committee will meet to discuss Prof. Peter Martin's report relative to procedures used in forming and implementing Federal-State agreements under the supplemental security income program, focusing particularly on how intergovernmental differences are resolved.

Attendance is open to the interested public, but limited to the space available. Persons wishing to attend should notify this office at least 2 days in advance. The Committee Chairman, if he deems it appropriate, may permit members of the public to present oral statements at the meeting; any member of the public may file a written statement with the Committee before, during, or after the meeting.

For further information concerning this meeting contact David B. H. Martin, 202-254-7065. Minutes of the meeting will be available on request.

RICHARD K. BERG,
Executive Secretary.

SEPTEMBER 5, 1978.

[FR Doc. 78-25467 Filed 9-8-78; 8:45 am]

[3410-03]

DEPARTMENT OF AGRICULTURE

Science and Education Administration

NATIONAL PLANT GENETICS RESOURCES BOARD

Meeting

According to the Federal Advisory Committee Act of October 6, 1972 (Pub. L. 92-463, 86 Stat. 770-776), the Science and Education Administration announces the following meeting:

NAME: National Plant Genetics Resources Board.

DATE: October 18, 1978, and one-half day on October 19, 1978.

TIME: 9 a.m.

PLACE: Cherokee Park Room, Lory Student Center, Colorado State University, Fort Collins, Colo. 80521.

TYPE OF MEETING: Open to the public. Persons may participate in the meeting as time and space permit.

COMMENTS: The public may submit written comments before or after the meeting with the contact person below.

PURPOSE: To advise the Secretary of Agriculture on policies and actions to more effectively collect, describe, and utilize plant genetic resources. Specifically, the Board will consider rotating the membership and discuss further distribution of the Board's report to the Secretary of Agriculture.

CONTACT PERSON FOR AGENDA AND MORE INFORMATION:

Dr. C. F. Lewis, Executive Secretary of the Board, Science and Education Administration, Federal Research, U.S. Department of Agriculture, BARC-West, Beltsville, Md. 20705, telephone 301-344-3884.

Done at Washington, D.C., this 7th day of Sept. 1978.

ANSON R. BERTRAND,
Director,
Science and Education.

[FR Doc. 78-25637 Filed 9-8-78; 8:45 am]

[6320-01]

CIVIL AERONAUTICS BOARD

[Docket Nos. 30823, 21866; Order 78-8-197]

AIR WISCONSIN CERTIFICATION PROCEEDING AND DOMESTIC PASSENGER FARE INVESTIGATION

Order To Show Cause

Adopted by the Civil Aeronautics Board at its office in Washington, D.C., on the 31st day of August 1978.

By companion order entered today in docket 30823, the Board has declined review of Administrative Law Judge Katherine A. Kent's decision to grant a certificate of public convenience and necessity to Air Wisconsin, Inc.[1] On June 15, 1978, Air Wisconsin filed a request for clarification, asking that the Board make clear its intention that, once certificated, Air Wisconsin is to be governed by any determinations made be the Board in the "Domestic Passenger Fare Investigation" (DPFI), including the requirements as to joint fares set forth in phase 4 of that proceeding.

We took such steps following the initial certification of Air New England[2] and Air Midwest[3] and following the grant of authority to Pan American to carry domestic traffic between Detroit and Boston.[4] Similar action is warranted here. Therefore we tentatively find and conclude that Air Wisconsin shall be bound by the Board's present and future determinations in the DPFI as through it had been a party to the original proceeding.

Although most of the DPFI requirements can be met unilaterally, participation in phase 4—which establishes maximum joint fares on interline connecting flights—obviously requires cooperation from other carriers. Accordingly, we tentatively find and conclude that Air Wisconsin, on the one hand, and all carriers certificated to provide scheduled service within the 48 contiguous States,[5] on the other, shall enter into and maintain all joint fares which are now, or may in the future be required by the Board in phase 4 of the "Domestic Passenger Fare Investigation," Docket 21866-4, as if Air Wisconsin were a local service carrier party to that proceeding; and they shall divide all joint fares by such methods as are or may be prescribed by the Board.[6]

Interested persons will be given 21 days following service of this order to show cause why the tentative findings and conclusions set forth here should not be made final. We expect such persons to support any objections they

[1] Initial decision, served May 17, 1978.

[2] "New England Service Investigation," order 74-10-102, Oct. 18, 1974.

[3] "Air Midwest Certification Proceeding," order 76-11-3, Nov. 2, 1976.

[4] "Detroit-Boston Nonstop Route Proceeding," order 76-9-163, Sept. 30, 1976.

[5] Except for Aspen Airways and Wright Air Lines, which are not subject to the DPFI requirements.

[6] All the issues involved in this show cause order have been exhaustively litigated in the DPFI, and the addition of one new carrier results in no appreciable change in any of the conclusions reached in that proceeding. Similarly, in light of the evidentiary record compiled in the DPFI, we find no need for further hearings directed solely to the addition of Air Wisconsin.

might have with detailed answers, specifically stating the findings and conclusions to which objection is taken. Such objections should be accompanied by arguments of fact or law and should be supported by legal precedent or detailed economic analysis. If an evidentiary hearing is requested, the objector should state in detail why such a hearing is considered necessary and what relevant and material facts he would expect to establish through such a hearing. General, vague, or unsupported objections will not be entertained. Answers may be filed 10 days after the date for filing objections.

Accordingly, *It is ordered*, That: 1. All interested persons are directed to show cause why the Board should not issue an order making final the tentative findings and conclusions stated here;

2. Any interested person objecting to the issuance of an order making final the findings and conclusions set forth here shall, no later than September 27, 1978, file with the Board and serve upon all certificated air carriers a statement of objections together with a summary of testimony, statistical data and any other evidence that is expected to be relied upon to support the stated objections, answers to objections shall be filed no later than October 10, 1978;

4. If timely and properly supported objections are filed, full consideration will be accorded the matters or issues raised by the objections before further action is taken by the Board;

5. In the event no objections are filed, all further procedural steps will be deemed to have been waived, and the matter will be submitted to the Board for final action.

This order will be published in the FEDERAL REGISTER.

By the Civil Aeronautics Board.

PHYLLIS T. KAYLOR,[7]
Secretary.

[FR Doc. 78-25502 Filed 9-8-78; 8:45 am]

[6320-01]

[Docket No. 33091]

FLORIDA SERVICE CASE

Postponement of Prehearing Conference

Notice is hereby given that the prehearing conference in the above-entitled matter now assigned to be held on September 19, 1978 (43 FR 36499, August 17, 1978) is hereby postponed to October 4, 1978 at 10 a.m. (local time), in room 1003, Hearing Room D, Universal Building North, 1875 Connecticut Avenue NW., Washington, D.C.

Dated at Washington, D.C., September 5, 1978.

WILLIAM H. DAPPER,
Administrative Law Judge.

[FR Doc. 78-25505 Filed 9-8-78; 8:45 am]

[6320-01]

[Docket No. 31855; Order 78-8-204]

LINEAS AEREAS PARAGUAYAS

Adopted by the Civil Aeronautics Board at its office in Washington, D.C., on the 31st day of August 1978.

Order To Show Cause Regarding Issuance of a Foreign Air Carrier Permit

On December 21, 1977, Lineas Aereas Paraguayas (LAP) filed an application requesting issuance of a foreign air carrier permit to engage in scheduled and charter foreign air transportation of persons, property, and mail between the terminal point Asuncion, Paraguay; the intermediate points Lima, Peru; Bogota, Colombia; Panama City, Panama; the terminal point Miami, Fla.; and the beyond point Montreal, Canada.

On May 19, 1978, LAP filed a motion for an order to show cause why its application should not be granted without an oral hearing.[1] No objections have been filed to the application or the motion.

Initially LAP intends to operate two weekly Miami-Panama City-Lima-Asuncion round-trip flights, adding the points Bogota and Montreal at a later date. LAP predicts a first year profit of $2,469,481 from these services and will perform the proposed operations with two B-707 aircraft.

In support of its request, LAP asserts that it is wholly owned and controlled by the Republic of Paraguay; that it has been designated by its government to operate in foreign air transportation between Paraguay and the United States pursuant to the United States-Paraguayan Air Transport Services Agreement;[2] that its operating authority has never been suspended, revoked, canceled or otherwise terminated since it inaugurated services in 1963;[3] that the government guarantees all contractual obligations and furnishes the carrier a monthly stipend;[4] that it has always been able to meet its financial and transportation obligations; and that LAP's aircraft maintenance and inspection programs comply with United States standards.[5]

The memorandum of understanding accompanying the exchange of diplomatic notes, dated March 9, 1978, with the Paraguayan Government officially endorses the important U.S. international policy goals of competitive price/quality service offerings and liberal passenger and cargo charter rules.[6]

The charter provision in the memorandum provides for country-of-origin charterworthiness rules which is a policy we have long advocated other governments adopt as the basis for conducting charter operations. As applied to LAP, this provision permits all Paraguayan-originating charters operated between the United States and Paragyay to be conducted pursuant to Paraguayan charter rules. Additionally, the charter provision eliminates the requirments that designated carriers obtain prior approval of all charter flights operated between the United States and Paraguay;[7] however, this is only applicable to charter operations conducted between the United States and Paraguay.

Unless otherwise provided, all carriers conduting charter flights must comply with the Board's economic regulations, irrespective of country of origination. Thus, implementation of foreign country-of-origin charterworthiness rules, which may be different from our own, and the operation of charter services without prior approval require a waiver form the pertinent Board regulations. The Board's charter regulations provide that waivers can be granted if found to be in the public interest and special circumstances exist warranting the grant. In view of the Board's responsiblities under section 1102 of the Act, we believe that the charter provision contained in the memorandum of understanding provides the special circum-

---

[7] All Members concurred.

[1] The applicant initially requested a waiver from pt. 312 of the Board's procedural regulations requiring submission of an environmental evaluation; however, it subsequently filed the requisite environmental evaluation in its motion for an order to show cause.

[2] The exchange of diplomatic notes, Mar. 9, 1978, implementing amendments to the Air Transport Services Agreement, provides for a designated Paraguayan air carrier to serve on a designated route between the United States and Paraguay.

[3] The applicant's safety record is marred by only one accident in 1967, where no fatalities occurred and no safety regulations appear to have been violated.

[4] LAP receives $48,800 monthly from the Government of Paraguay.

[5] The Government of Paraguay is a member State of the International Civil Aviation Organization (ICAO).

[6] Attachment 4 of the memorandum provides that the "Contracting parties shall * * * encourage and support individual airline initiatives to offer innovative, low-priced tariffs and a variety of service options." Attachment 6 of the memorandum provides for (1) the unrestricted designation of airlines for charter flights; (2) fair competition principles, and (3) acceptance of country-of-origin charterworthiness rules.

[7] Pt. 212 of the Board's economic regulations requires approval of all off-route charter flights prior to commencement of operations.

stance to warrant the grant of waivers from the Board's charter regulations. Such would clearly be in the public interest.

Accordingly, we shall tentatively waive those provisions of part 212 of the Board's economic regulations (except with respect to provisions governing charters to direct air carriers and direct foreign air carriers for commercial traffic) and any other regulation that would otherwise prevent LAP from operating Paraguayan-originating charters between the United States and Paraguay pursuant to rules, regulations, or conditions governing charterworthiness established by the Paraguayan Government. We shall tentatively add LAP to the list of carriers in appendix A of order 77-10-120, to eliminate the requirment of obtaining prior approval of off-route charter operations.[8] Although we recognize that inclusion on this list grants LAP a broader waiver than contemplated by the memorandum of understanding (charters between Paraguay and the United States), we see no reason to require prior approval for some off-route charters while waiving the requirement for others at this time.[9]

In view of the foregoing and all the facts of record, we tentatively find and conclude that:

1. Lineas Aereas Paraguayas is substantially owned and effectively controlled by the Government of Parauay;

2. It is in the public interest to issue a foreign air carrier permit to Lineas Aereas Paraguayas authorizing it to engage in foreign air transportation of persons, property, and mail between the terminal point Asuncion, Paraguay; the intermediate points Lima, Peru; Bogota, Colombia; Panama City, Panama; Miami, Fla.; and the terminal point Montreal, Canada;

3. The public interest requires that the exercise of the privileges granted by such permit shall be subject to the terms, conditions, and limitations contained in the specimen form of the permit attached to this order, and to such other reasonable terms, conditions, and limitations required by the public interest as may be prescribed by the Board;

4. That Lineas Aereas Paraguayas is fit, willing, and able to perform properly the foreign air transportation described in the specimen permit attached to this order, and to conform to the provisions of the Act and the rules, regulations, and requirements of the Board;

5. The public interest and special circumstances warrant a waiver of part 212 of the Board's economic regulations (except with respect to the provision of such part governing charters to direct air carriers and direct foreign air carriers for commercial traffic) and such other provisions of the Board's charter regulations to the extent necessary to permit Lineas Aereas Paraguayas to operate Paraguayan-originating charters between the United States and Paraguay pursuant to Paraguayan rules, regulations, and conditions governing the charterworthiness of such charters. The waivers shall be applicable to the extent contemplated by the memorandum of understanding and shall terminate upon the expiration of the memorandum of understanding between the Government of the United States and the Government of Paraguay, signed March 9, 1978, or such Understanding as it may be amended or superceded;

6. Appendix A of order 77-10-120 be amended to include Lineas Aereas Paraguayas;

7. That the approval of Lineas Aereas Paraguayas' application will not constitute a "major Federal action significantly affecting the quality of the human environment" within the meaning of section 102(2)(c) of the National Environmental Policy Act of 1969 and will not constitute a "major regulatory action" under the Energy Policy and Conservation Act of 1975, as defined in §313.4(a)(1) of the Board's procedural regulations;[10]

8. The public interest does not require an oral hearing;

9. Except to the extent granted, the application of Lineas Aereas Paraguayas in docket 31855 should be denied.

It is therefore ordered, That:

1. All interested persons are directed to show cause why the Board should not make final its tentative findings and conclusions set forth above and why a foreign air carrier permit in the form of the attached specimen permit should not, subject to approval by the President, pursuant to section 801 of the Act, be issued to Lineas Aereas Paraguayas (LAP);

2. Any interested persons having objections to the issuance of an order making final the Board's tentative findings and conclusions, granting waivers of the Board's regulations, and issuing the permit shall, on or before September 20, 1978, file with the Board and serve on the persons named in paragraph 5, a statement of objections specifying the part or parts of the tentative findings and conclusions objected to, together with a summary of testimony, statistical data and such evidence expected to be relied upon in support of the statement of objections. If an oral hearing is requested, the objector should state in detail why such hearing is considered necessary and what relevant and material facts he would expect to establish that could not also be established in written pleadings;

3. If timely and properly supported objections are filed, further consideration will be given the matters and issues raised by the objector before further action is taken by the Board; *Provided*, That the Board may proceed to enter an order in accordance with its tentative findings and conclusions set forth in the order if it determines that there are no factual issues presented that warrant the holding of an oral hearing;[11]

4. In the event no objections are filed, all further procedural steps will be waived and the Secretary shall enter an order which (1) shall make final the Board's tentative findings and conclusions set forth in this order; (2) shall grant waivers from the Board's regulations; and (3) subject to the approval of the President, shall issue a foreign air carrier permit to the applicant in the specimen form attached; and

5. This order shall be served upon Lineas Aereas Paraguayas; the Ambassador of Paraguay in Washington, D.C.; the U.S. Departments of State and Transportation; and Braniff Airways, Inc.

This order shall be published in the FEDERAL REGISTER and transmitted to the President.

By the Civil Aeronautics Board.

PHYLLIS T. KAYLOR,[12]
Secretary.

UNITED STATES OF AMERICA, CIVIL AERONAUTICS BOARD, WASHINGTON, D.C.

Permit to Foreign Air Carrier

Lineas Aereas Paraguayas is authorized, subject to the following provisions, the provisions of the Federal Aviation Act of 1958, and the orders, rules, and regulations of the Board, to engage in foreign air transportation of persons, property, and mail, as follows:

Between the terminal point Asuncion, Paraguay; the intermediate points Lima, Peru; Bogota, Colombia; Panama City, Panama; Miami, Fla.; and the terminal point Montreal, Canada.

[8] Order 77-10-120, Oct. 27, 1977, grants to certain named foreign air carriers a blanket waiver of the requirements to file for statement of authorization prior to operating off-route charters.

[9] The waiver granted here does not eliminate the necessity to file charter prospectuses for all LAP United States-originating charters.

[10] Our tentative finding is based upon the fact that the grant of this proposed permit will not result in any significant change in the level of service at Miami (two weekly round-trip flights). Thus our action will not constitute a major federal action within the meaning of the National Environmental Policy Act of 1969. Moreover, the implementation of LAP's proposed authority will not result in the near-term consumption of 10 million gallons of fuel.

[11] Since provision is made for the filing of objections to this order, petitions for reconsideration will not be entertained.

[12] All Members concurred.

The holder shall be authorized to engage in charter trips in foreign air transportation, subject to the terms, conditions, and limitations prescribed by part 212 of the Board's economic regulations.

The holder shall conform to the airworthiness and airman competency requirements prescribed by the Government of Paraguay for Paraguayan international air services.

This permit shall be subject to all applicable provisions of any treaty, convention, or agreement affecting international air transportation now in effect, or that may become effective during the period this permit remains in effect, to which the United States and Paraguay shall be parties.

The holder shall keep on deposit with the Board a signed counterpart of CAB Agreement 18900, an agreement relating to liability limitations of the Warsaw Convention and the Hague Protocol approved by Board order E-23680, May 13, 1966, and a signed counterpart of any amendment or amendments to such agreement which may be approved by the Board and to which the holder becomes a party.

The holder (1) shall not provide foreign air transportation under this permit unless there is in effect third-party liability insurance in the amount of $1,000,000 or more to meet potential liability claims which may arise in connection with its operations under this permit, and unless there is on file with the docket section of the Board a statement showing the name and address of the insurance carrier and the amounts and liability limits of the third-party liability insurance provided, and (2) shall not provide foreign air transportation of persons unless there is in effect liability insurance sufficient to cover the obligations assumed in CAB Agreement 18900, and unless there is on file with the docket section of the Board a statement showing the name and address of the insurance carrier and the amounts and liability limits of the passenger liability insurance provided. Upon request, the Board may authorize the holder to supply the name and address of an insurance syndicate in lieu of the names and addresses of the member insurers.

The initial tariff filed by the holder shall not set forth rates, fares, and charges lower than those that may be in effect for any U.S. air carrier in the same foreign air transportation: *However,* This limitation shall not apply to a tariff filed after the initial tariff regardless of whether this subsequent tariff is effective before or after the introduction of the authorized service.

By accepting this permit, the holder waives any right it may possess to assert any defense of sovereign immunity from suit in any action or proceeding instituted against the holder in any court or other tribunal in the United States (or its territories or possessions) based upon any claim arising out of operations by the holder under this permit.

The exercise of the privileges granted here shall be subject to such other reasonable terms, conditions, and limitations required by the public interest as may from time to time be prescribed by the Board.

This permit shall be effective on ———. Unless otherwise terminated at an earlier date pursuant to the terms of any treaty, convention, or agreement, this permit shall terminate: (1) Upon the effective date of any treaty, convention, agreement, or amendment thereto, which shall have the effect of eliminating the route here authorized from the routes which may be operated by airlines designated by the Government of Paraguay (or in the event of the elimination of any part of a route or routes hereby authorized, the authority granted here shall terminate to the extent of such elimination; (2) upon the effective date of any permit granted by the Board to any other carrier designated by the Government of Paraguay in lieu of the holder hereof; or (3) upon the termination or expiration of the air transport services agreement between the Government of the United States of America and the Government of Paraguay, effective February 16, 1948, as amended effective March 9, 1978: *Provided, however,* That clause (3) of this paragraph shall not apply if, prior to the event specified in clause (3), the operation of the foreign air transportation here authorized becomes the subject of any treaty, convention, or agreement to which the United States and Paraguay are or shall become parties.

The Civil Aeronautics Board, through its Secretary, has executed this permit and affixed its seal on ———.

———

Secretary.

Issuance of this permit to the holder approved by the President of the United States on ——— in order ———.

[FR Doc. 78-25506 Filed 9-8-78; 8:45 am]

[6320-01]

[Docket Nos. 32154, etc.; Order 78-8-192]

NATIONAL AIRLINES, INC. ET AL.

Order to Show Cause

Adopted by the Civil Aeronautics Board at its office in Washington, D.C., on the 31st day of August 1978.

Application of National Airlines, Inc. for amendments of its certificates of public convenience and necessity for Routes 31 and 39, docket 32154; application of Northwest Airlines, Inc. for amendments of its certificates of public convenience and necessity for Route 3, docket 32189; application of Delta Air Lines, Inc. for amendments of its certificates of public convenience and necessity for Routes 27 and 54, docket 32226; application of United Air Lines, Inc. for amendments of its certificates of public convenience and necessity for Route 51, docket 32827; application of Continental Air Lines, Inc. for amendments of its certificates of public convenience and necessity for Route 29, docket 32915; application of Braniff Airways, Inc. for amendments of its certificates of public convenience and necessity for Route 9, docket 32928.

On February 22, 1978, National Airlines filed an application in docket 32154 for amendments of its certificates of public convenience and necessity for Routes 31 and 39, accompanied by a petition for a show-cause order. National is seeking to remove a closed-door restriction between Fort Lauderdale and Miami,[1] and single-plane restrictions between Fort Lauderdale, on the one hand, and West Palm Beach, Melbourne, Tampa-St. Petersburg-Clearwater (Tampa), Orlando, Panama City, Jacksonville, Pensacola, Mobile, or any point outside the continental limits of the United States, on the other.[2]

On March 2, 1978, Northwest Airlines filed an application in docket 32189 for an amendment of its certificate for Route 3, accompanied by a petition for a show-cause order and a motion to consolidate with National's application. Northwest also wants traffic rights between Miami and Fort Lauderdale.[3]

On March 10, 1978, Delta Air Lines filed an application in docket 32226 for amendments of its certificates for Routes 27 and 54 accompanied by a motion to consolidate with National's application Delta has a closed-door restriction between Miami and Fort Lauderdale,[4] and a single-plane restriction between Fort Lauderdale and West Palm Beach.[5]

On June 8, 1978, United Air Lines filed an application in docket 32827 for amendment of its certificate for Route 51, accompanied by a motion to consolidate with National's Northwest's, and Delta's applications and a petition for show-cause order. United has a closed-door restriction between Fort Lauderdale and Miami, and a single-plane restriction between Fort Lauderdale and West Palm Beach.

On June 27, 1978, Continental Air Lines applied in docket 32915 to amend its cetificate for Route 29 to authorize it to engage in unrestricted air transportation between Miami and Fort Lauderdale on segments 18 and 20. Simultaneously, Continental petitioned for an order to show cause and filed a motion to consolidate its application with National's, Northwest's, Delta's, and United's.

On June 29, 1978, Braniff Airways applied in docket 32928 to amend its certificate for Route 9 to redesignate the hyphenated points Miami-Fort Lauderdale on segments 8, 10, and 12 as coterminals; the application involves other new authority not relevant here. Simultaneously, Braniff petitioned for an order to show cause why this relief should not be granted

[1] Condition (4) on Route 31.

[2] Condition (5) on Route 31 and condition (3) on Route 39.

[3] Condition (7) on Route 3 prohibits air transportation between those two points.

[4] Condition (8) on Route 26 and condition (6) on Route 54. In Delta's realignment, order 78-4-109, Apr. 19, 1978 (see appendix H) we have tentatively decided to grant Delta one-stop authority in this market.

[5] Condition (7) on route 54. Order 78-4-109 (see appendix F) proposes the award to Delta of nonstop authority between West Palm Beach and Fort Lauderdale, subject to a long-haul restriction.

and filed a motion to consolidate the Miami-Fort Lauderdale portion of its application with National's, Northwest's, Delta's, and United's. Braniff also moved to consolidate its entire application with the *Dallas/Fort Worth-New Orleans-Florida Service Investigation*, docket 32711.

Answers in opposition to Nation's petition to show cause were filed by Eastern Air Lines and by Delta; Eastern also filed answers in opposition to Northwest, and to the show cause petitions of Continental and Braniff. An answer in support of National's application was filed by the Broward County Board of County Commissioners, Aviation Division.

In support of its application, National argues that approval will provide scheduling flexibility in serving Fort Lauderdale but will not necessarily lead to an immediate increase in the number of flights at that point; that the procedural reasons that resulted in the imposition of the single-plane restrictions in the Fort Lauderdale markets no longer exist; and that the reason for the Miami-Fort Lauderdale closed-door restriction—the protection of Mackey Airlines—has disappeared, since Mackey was merged into Eastern in 1966. National claims that, as a consequence, these restrictions have outworn their usefulness and should be removed.

Northwest's, Delta's, United's, Continental's, and Braniff's arguments for removal of the restrictions are similar to those of National. Delta also contends that it would be discriminatory and unreasonable to relieve National from its restrictions in the Fort Lauderdale-West Palm Beach/Miami markets while denying the same relief for other carriers similarly restricted.

Eastern's opposition to National's application focuses on two issues. First, it contends that removal of restrictions in the Fort Lauderdale markets should be considered within the context of the trunkline route realignment proposals now pending before the Board. (Eastern makes the same point in its answer to Northwest's application.) Second, it claims that National has violated its Route 39 certificate by engaging in air transportation between Fort Lauderdale and Miami.[6]

In its answer to the show-cause petitions of Continental and Braniff for coterminalization, Eastern argues that, since the Board has placed the question of service between Fort Lauderdale and Miami in the recently instituted *Dallas/Fort Worth-New Orleans-Florida Service Investigation*, docket 32711 (order 78-5-129, May 19, 1978), it should not consider that Fort Lauderdale-Miami issues by show-cause procedures.

Delta's answer in opposition to National's petition is similar to Eastern's. Delta contends that it would be "highly improper and unfair" for the Board to process National's "minirealignment" before taking final action on its realignment application. Specifically, Delta opposes National's request for improved authority in the Fort Lauderdale - Jacksonville / Orlando/ Tampa markets until Delta is afforded adequate relief in these markets—through realignment or otherwise.[7]

We tentatively conclude that the public convenience and necessity require the removal of National's, Northwest's, Delta's, and United's closed-door restrictions in the Fort Lauderdale-Miami markets; the removal of National's single-plane restrictions in the Fort Lauderdale-West Palm Beach/Melbourne/Tampa/Orlando/Panama City/Jacksonville/Pensacola/Mobile markets, and between Fort Lauderdale and any point outside the continental limits of the United States, subject to the imposition of a one-stop restriction in the Fort Lauderdale - Tampa / Jacksonville / Orlando markets; the removal of Delta's single-plane restriction in the Fort Lauderdale-West Palm Beach market; the removal of United's single-plane restriction between Fort Lauderdale and West Palm Beach; and the coterminalization of the hyphenated Miami-Fort Lauderdale points on segments 18 and 20 of Continental's Route 29, and on segments, 8, 10, and 12 of Braniff's 9 to permit the carriage of local traffic between those two points. In addition, Eastern and TWA should be granted traffic rights between Fort Lauderdale and Miami, and Eastern should have its single-plane restriction between Fort Lauderdale and West Palm Beach removed.[8,9]

We also tentatively conclude that the applications present no questions of fact or law requiring an oral evidentiary hearing, and that all interested persons should be directed to show cause why the Board's tentative findings and conclusions should not be made final.

In support of our determination, we find that the proposed amendments conform with our policy of removing operating restrictions in the absence of an affirmative showing that their retention is required.[10] Neither Eastern nor Delta has demonstrated that removal of the restrictions will impair adequacy of service to any point or have any other significant adverse impact. Rather, their objections raise procedural, as opposed to substantive, issues. Both carriers urge us to defer consideration of National's application until we have completed the route realignments of the other trunkline carriers.[11] They contend that National is requesting a realignment (or a "minirealignment," as Delta labels it), which should be considered last of all the trunkline route realignments.

We do not agree that National's request constitutes a route-realignment proposal. Unlike the others we have considered to be route-realignment proposals and have treated as such[12] National's request is directed to removing restrictions on a relatively

[6]To the extent that National may be in violation of any provision of the Act or its certificate, our action in this order does not prejudice or otherwise affect any enforcement action which may be undertaken in the future.

[7]On the assumption that National has requested relief in the Fort Lauderdale-Daytona Beach/Tallahassee markets, Delta opposes the grant of this relief because these markets are at issue in the *Florida-Atlanta Competitive Nonstop Service Investigation*, docket 30679. Although National has included these markets in its exhibit NAL-1, it has not referred to them in its application or petition. Accordingly, we will not consider them in this proceeding.

[8]Fort Lauderdale-Miami closed-door restrictions are contained in the following certificates: Eastern-condition (10), Route 6 and condition (7)(a), Route 10; TWA-condition (28), Route 2.

Fort Lauderdale-West Palm Beach single-plane service is restricted in the following certificates: Eastern-condition (11), Route 6 and condition (8), Route 10.

We find that National, Northwest, Delta, Eastern, TWA, United, Continental, and Braniff are each citizens of the United States within the meaning of the Act and are fit, willing, and able to engage in the air transportation proposed here.

[9]We have decided to consider unrestricted Miami-Fort Lauderdale authority for Braniff here even though it is at issue in the Dallas/Fort Worth-New Orleans-Florida Service Investigation. The instituting order of that case indicated that the Miami-Fort Lauderdale and the other two intra-Florida markets (Tampa-Miami and Tampa-Fort Lauderdale) were placed in issue solely in the interests of giving the applicants the maximum operational flexibility in devising their service plans to Dallas/Fort Worth and New Orleans. We see no reason to place Braniff at a disadvantage vis-a-vis the other carriers with authority at Miami and Fort Lauderdale, pending the outcome of the formal case. Of course, our proposed decision here, if made final, will moot the question of whether the Miami-Fort Lauderdale portion of Braniff's application in docket 32928 should be granted in the Dallas/Fort Worth-New Orleans Florida Service Investigation.

[10]See, e.g. order 78-4-67, Apr. 14, 1978, order 77-11-41, Nov. 10, 1977, and orders cited in n. 9 of the latter.

[11]The trunkline realignment applications pending before the Board are American (D. 29874), Continental (D. 29357), Eastern (D. 29933), Northwest (D. 29449), United (D. 28755), and TWA (D. 30369). We have tentatively realigned Delta's route in order 78-4-109, supra.

[12]See e.g., order 76-7-101, July 26, 1976. There, United and American had submitted applications to realign certain of their respective routes. The Board deemed these "partial realignments," and invited the carriers to submit a domestic 48-State proposal for single-segment domestic operating authority.

small portion of its linear routes. Moreover, National has not sought a realignment and is not, therefore, attempting to preempt the orderly processing of realignments, a practice we have discouraged.

Our tentative decision to grant unrestricted authority between Fort Lauderdale and Miami is based on the relatively small size of the market,[13] the increased operating flexibility that will be afforded, the extremely short stage length (about 30 miles), and the market's position as entry mileage for longer haul flights. The authority we tentatively award in the other Fort Lauderdale markets, including the imposition of the one-stop restrictions on National in the Fort Lauderdale-Tampa/Jacksonville/Orlando markets, conforms with the guidelines we set out in the western route realignment.[14]

Moreover, the single-plane restrictions in the Fort Lauderdale markets were imposed for procedural reasons and are now outmoded,[15] and the closed-door restriction was imposed to protect the limited operations of Mackey Airlines. Mackey was merged into Eastern on July 25, 1966.

Interested persons will be given until October 6, 1978, to show cause why the tentative findings and conclusions we make here should not be made final. We expect such persons to support their objections, if any, with detailed answers, specifically reciting the tentative findings and conclusions to which objection is taken. Objections should be accompanied by arguments of fact or law and should be supported by legal precedent or detailed economic analysis. If an oral evidentiary hearing is requested, the objector should state in detail why such a hearing is necessary and what relevant and material facts he would expect to establish through a hearing that cannot be established in written pleadings. General, vague, or unsupported objections will not be entertained.[16]

Accordingly, it is ordered, That:

1. All interested persons are directed to show cause why the Board should not issue an order making final the tentative findings and conclusions stated here and modifying certain conditions in the certificates of public convenience and necessity of National Airlines for Routes 31 and 39, Northwest Airlines for Route 3, Delta Air Lines for Routes 27 and 54, Eastern Air Lines for Routes 6 and 10, Trans World Airlines for Route 2, United Air Lines for Route 51, Continental Air Lines for Route 29, and Braniff Airways for Route 9, as follows:

a. *National Route 31*—Delete condition (4);

b. *National Route 31*—Revise condition (5) as follows: "Flights between Fort Lauderdale, Fla., on the one hand and Tampa-St. Petersburg-Clearwater, Orlando, or Jacksonville, Fla., on the other shall serve a minimum of one intermediate point";

c. *National Route 39*—Revise condition (3) as follows: "Flights between Miami-Fort Lauderdale, Fla. (through Fort Lauderdale Hollywood International Airport), and Tampa-St. Petersburg-Clearwater or Jacksonville, Fla., shall serve a minimum or one intermediate point";

d. *Northwest Route 3*—Delete condition (7);

e. *Delta Route 27*—Delete condition (6);

f. *Delta Route 54*—Delete conditions (6) and (7);

g. *Eastern Route 6*—Delete condition (10);

h. *Eastern Route 6*—Revise condition (11) to read as follows: "The holder shall not engage in single-plane air transportation between Fort Lauderdale, Fla., and San Juan, P.R.";

i. *Eastern Route 10*—Revise condition (7) to read as follows: "The holder shall not engage in nonstop air transportation between Nashville, Tenn., and St. Louis, Mo., and between Chicago, Ill., and Louisville, Ky.";

j. *Eastern Route 10*—Revise condition (8) to read as follows: "The holder shall not engage in single-plane air transportation between Fort Lauderdale, Fla., and San Juan, P.R.";

k. *TWA Route 2*—Delete condition (28);

l. *United Route 51*—Delete condition (13);

m. *United Route 51*—Revise condition (14) to read as follows: "The holder shall not engage in single-plane air transportation with respect to persons and property between Rochester, N.Y., and Cleveland, Ohio";

n. *Continental Route 29*—On segments 18 and 20, redesignate the hyphenated Miami-Fort Lauderdale points as coterminal points;

o. *Braniff Route 9*—On segments 8, 10, and 12, redesignate the hyphenated Miami-Fort Lauderdale points as coterminal points.

2. Any interested person having objection to the issuance of an order making final the proposed findings or conclusions made here shall, by October 6, 1978, file with the Board and serve upon all persons listed in paragraph 8, a statement of objections together with a summary of testimony statistical data, and other evidence relied upon to support the stated objections;[17] answers will be due no later than October 16, 1978;

3. If timely and properly supported objections are filed, full consideration will be accorded the matters and issues raised by the objections before further action is taken by the Board;

4. In the event no objections are filed, all further procedural steps will be deemed to have been waived and the Board may proceed to enter an order in accordance with the tentative findings and conclusions stated here;

5. The petitions of National Airlines (docket 32154), Northwest Airlines (docket 32189), Delta Air Lines (docket 32226), United Air Lines (docket 32827), Continental Air Lines (docket 32915), and Braniff Airways (docket 32928) for an order to show cause be granted;

6. The motions to consolidate into docket 32154 of Northwest Airlines (docket 32189), Delta Air Lines (docket 32226), United Air Lines (docket 32827), Continental Air Lines (docket 32915), and Braniff Airways (docket 32928) be granted; and

7. For purposes of computing license fees, each carrier shall estimate its annual gross transport revenue increase, for the first full year of operations, resulting from the modified authority tentatively granted by this order; and

8. A copy of this order shall be served upon: The mayors of the Cities of Fort Lauderdale, West Palm Beach, Jacksonville, Tampa, Melbourne, Orlando, Mobile, Daytona Beach, and Metropolitan Dade County; the city manager of Pensacola; the directors of the Broward County Aviation Division, Palm Beach International Airport, Jacksonville Port Authority, Hillsborough County Aviation Authority, Pensacola Airport, Dade County Aviation Department, and Greater Miami Traffic Association; the airport manager of Bates Field; the chief, Bureau of Aviation, Department of Transportation, Tallahassee, Fla.; and upon National Airlines, Delta Air Lines, Continental Air Lines, Eastern Air Lines, Braniff Airways, Southern Airways, Northwest Airlines, TWA, and United Air Lines.

This order shall be published in the FEDERAL REGISTER.

By the Civil Aeronautics Board.

PHYLLIS T. KAYLOR,[18]
Secretary.

[FR Doc. 78-25503 Filed 9-8-78; 8:45 am]

[13] Eight thousand eight hundred true O. & D. plus interline connecting traffic for 1976.

[14] Order 76-5-101, May 21, 1976, made final by order 77-11-74, Nov. 17, 1977.

[15] National's petition, at 2-6, relates the history of these restrictions.

[16] We do not anticipate that our proposed action will result in any substantial increase in air-carrier operations at any city involved, and we therefore find that it is not a major Federal action significantly affecting the quality of the human environment within the meaning of sec. 102(2)(C) of the National Environmental Policy Act of 1969.

[17] All motions and/or petitions for reconsideration shall be filed within the period allowed for filing objections and no further such motions, requests, or petitions for reconsideration of this order will be entertained.

[18] All members concurred.

[3510-17]

DEPARTMENT OF COMMERCE

Industry and Trade Administration

[File No. 562]

CORDIN CO.

Order Regarding Validated Export Licenses

By letter of January 24, 1978, the Compliance Division charged Cordin Co., 2230 South 3270 West, Salt Lake City, Utah 84119, with two unlawful exportations of controlled commodities, viz, its model 116 streak and framing cameras.

Cameras similar to those involved here could be exported under general license if they were manufactured to lesser specifications than those described in the Commodities Control List (CCL). In the instant case the fabricated cameras fall within the class of controlled commodities. However, the purchaser did not require such degree of sophistication and agreed to accept delivery of downgraded equipment. Since the specifications were lowered, the cameras were shipped under general license.

The regulations of the Commerce Department require validated licenses for controlled items. But even controlled items may be exported under general license if they are irreversibly downgraded. Although it appears that Cordin intended to comply and export downgraded equipment which did not require a validated export license, careful study indicates that the downgrading had been effected in a manner which did not assure nonreversibility; the purchaser, with but little effort, could restore the cameras to their original full capacity.

Respondent asserts it did not violate the export laws. However, for the purpose of this proceeding it recognizes and admits the applicability of the Commerce Department's regulations. This casts respondent in the position of having failed to obtain the necessary validated licenses.

The Hearing Commissioner reports that Cordin Co. exported downgraded cameras in violation of the regulations. He notes that the respondent now accepts the Commerce Department's interpretation and application of the regulations and that it is fully committed to compliance. He remarks that respondent fully realizes its error and that it reasonably may be anticipated that respondent will fully comply with all regulations in the future; respondent is not now suspect in any other case. The Commissioner recommended approval of the consent proposal negotiated pursuant to § 388.10 of the Export Administration Regulations.

Based on the foregoing and the recommendation of the Hearing Commissioner, I find respondent violated the export regulations as alleged in the charging letter. I find that the civil penalty stipulated in the consent proposal is fair and reasonably necessary to protect the public interest and to achieve effective enforcement of the Export Administration Act. Therefore, pursuant to the authority delegated to me, 15 CFR 387.1: *It is ordered*

(1) A $1,000 civil penalty is imposed upon respondent.

(2) Respondent, for a period of 15 months, is denied all privileges, directly and indirectly, in any manner or capacity in any transaction involving export of U.S. commodities requiring validated export licenses. However, conditioned on faithful observance of this order and full compliance with the export administration laws and regulations all except 3 months of the denial period will be suspended, i.e., the period of denial will be suspended on and after November 27, 1978.

The denial of export privileges shall extend to its agents, employees, or successors in interest and to any person or party with whom respondent now or hereafter may be related by ownership, control, position of responsibility, affiliation or other connection in the conduct of trade or related services.

During the time when respondent is denied export privileges described herein, no person, firm, corporation, partnership or other business organization, whether in the United States or elsewhere, without prior disclosure to and specific authorization from the Industry and Trade Administration, shall do any of the above mentioned acts, directly or indirectly, or carry on negotiations with respect thereto in any manner, or capacity, on behalf or in any association with respondent or whereby respondent may obtain any benefit therefrom, or have any interest or participation therein directly or indirectly.

(3) After 3 months, November 27, 1978, and subject of the terms and conditions of this order, respondent is restored to full export privileges. Upon a finding by the Director, Office of Export Administration, or other authorized officer, that respondent has failed to comply with the requirements and conditions of this order, when national security or foreign policy considerations is involved and without notice, or with notice of such considerations are not involved, such officer may revoke all outstanding validated export licenses to which respondent may be a party and deny all respondent's export privileges for the remaining period of this order. If a supplemental order should be issued because of breach of the terms and conditions herein it will contain the prescriptions of 15 CFR 387.10 and 388.1. A supplemental order will not preclude the Department of Commerce from taking further action in connection with any violation. Respondent will be permitted to file objection to a supplemental order, petition that the order be set aside, and may request an oral hearing in accordance with the pertinent Export Administration Regulations, 15 CFR 388.16; but proceedings under § 388.16 will not stay the order of revocation which order will remain in effect until otherwise modified or canceled.

This order is effective immediately.

Dated: August 30, 1978.

LAWRENCE J. BRADY,
Acting Director, Office of Export Administration.

[FR Doc. 78-25486 Filed 9-8-78; 8:45 am]

[3510-25]

BAYLOR COLLEGE OF MEDICINE

Decision on Application for Duty-free Entry of Scientific Article

The following is a decision on an application for duty-free entry of a scientific article pursuant to section 6(c) of the Educational, Scientific, and Cultural Materials Importation Act of 1966 (Pub. L. 89-651, 80 Stat. 897) and the regulations issued thereunder as amended (15 CFR 301).

A copy of the record pertaining to this decision is available for public review between 8:30 a.m. and 5 p.m. in room 6886C of the Department of Commerce Building, at 14th and Constitution Avenue NW., Washington, D.C. 20230.

Docket No. 78-00229. Applicant: Baylor College of Medicine, 1200 Moursund Avenue, Houston, Tex. 77030. Article: Goniometer Tilt Stage for Electron Microscope. Manufacturer: Philips Electronics Instruments NVD, the Netherlands. Intended use of article: The article is an accessory to an existing electron microscope which will be used in studies of the myofibril protein lattice in striated muscle called the *z band* and *microtubule* networks in *striated muscle*. The objectives of these studies are to build and test three dimensional models of these structures based on electron micrographs at various tilt angles in various orientations and based on optical diffraction data from the electron micrographs.

Comments: No comments have been received with respect to this application.

Decision: Application approved. No instrument or apparatus of equivalent scientific value to the foreign article, for such purposes as this article is in-

tended to be used, is being manufactured in the United States.

Reasons: The application relates to a compatible accessory for an instrument that had been previously imported for the use of the applicant institution. The article is being furnished by the manufacturer which produced the instrument with which the article is intended to be used and is pertinent to the applicant's purposes. The Department of Health, Education, and Welfare (HEW) advises in its memorandum dated August 10, 1978 that it knows of no domestic instrument of equivalent scientific value to the article for its intended uses.

The Department of Commerce knows of no other similar accessory being manufactured in the United States, which is interchangeable with or can be readily adapted to the instrument with which the foreign article is intended to be used.

(Catalog of Federal Domestic Assistance program No. 11.105, Importation of Duty-Free Educational and scientific Materials.)

RICHARD M. SEPPA,
Director,
Statutory Import Programs Staff.

[FR Doc. 78-25475 Filed 9-8-78; 8:45 am]

[3510-25]

BUREAU OF BIOLOGICS, FOOD AND DRUG ADMINISTRATION ET AL.

Consolidated Decision on Applications for Duty-Free Entry of Electron Microscopes

The following is a consolidated decision on applications for duty-free entry of electron microscopes pursuant to section 6(c) of the Educational, Scientific, and Cultural Materials Importation Act of 1966 (Pub. L. 89-651, 80 Stat. 897) and the regulations issued thereunder as amended (15 CFR 301). (See especially § 301.11(e).)

A copy of the record pertaining to each of the applications in this consolidated decision is available for public review between 8:30 a.m. and 5 p.m. in Room 6886C of the Department of Commerce Building, at 14th and Constitution Avenue NW., Washington, D.C. 20230.

Docket No. 78-00294. Applicant: Bureau of Biologics, Food and Drug Administration, Building 29, Room 514, 8800 Rockville Pike, Bethesda, Md. 20014. Article: Electron Microscope, Model H-500-L and accessories. Manufacturer: Hitachi Ltd., Japan. Intended use of article: The article is intended to be used for ultrastructural studies pertinent to control and research activities concerned with biological products including viral, rickettsial, and bacterial vaccines, allergenic products, blood and blood fractions or derivatives, and diagnostic reagents. The studies to be conducted will include the following:

(1) The study of viral suspensions to define morphological characteristics and antigenic response of candidate strains of viruses used for the production of viral vaccines.

(2) The study of viral vaccines to insure safety, potency, and efficiency of these vaccines, e.g., the presence of extraneous viruses or bacteria in the finished product.

(3) The study of thin sections or surface morphology of cells used as substrates in the production of vaccines to define growth characteristics or normal ultrastructure and for the presence of extraneous contaminating microbial agents such as bacteria, mycoplasma, yeast, and viruses including candidate oncogenic viruses.

(4) The development of animal model systems for the study of the pathogenesis of diseases, e.g., the study of hepatitis in chimpanzees and monkeys inoculated with serum from patients suffering from hepatitis, icterogenic pools of serum known to be responsible for the production of hepatitis in humans or blood products suspected of being icterogenic.

(5) The study of blood, blood clots, blood cells, and blood derivatives under varying conditions, e.g., the effects of anticoagulants and varying storage conditions on red blood cells and blood platelets ultrastructure relative to setting standards for storage of these fragile blood components.

(6) The study of particulate contaminants in products regulated by the FDA.

(7) The study of the relationship of human diseases, sylvan hosts, and ectoparasite vectors in the transmission of diseases.

(8) The study of bacterial morphology, at the ultrastructural level including surface structures, e.g., fresh isolates of gonococci contain large numbers of pili.

(9) The study of vaccines produced from disrupted viruses, e.g., an experimental vaccine produced from the surface antigen of hepatitis B is examined in the transmission microscope using a negative staining technique.

(10) The study of nucleic acids of viruses and bacteria, e.g., extra chromosomal DNA of bacteria (plasmids) are associated with antibiotic resistances and other characteristics which can be transferred to other strains of bacteria by various means. Article ordered: September 6, 1977.

Docket No. 78-00297. Applicant: Medical College of Georgia, 1120 15th Street, Augusta, Ga. 30901. Article: Electron Microscope, Model EM 400 HMG with magnification coniometer and accessories. Manufacturer: Philips Electronics Instruments NVD, The Netherlands. Intended use of article: The article is intended to be used for study of varied material or phenomena which will include the following:

(1) Ultrastructural and immunomorphology of human glomerular disease.

(2) Development of the human fetal kidney.

(3) Ultrastructural and cytochemical observations on neurosecretory product.

(4) Fine structure in human myopathies.

(5) Biologic fine structure of human malignant neoplasms.

(6) Fine structural studies on diseased parathyroid.

(7) Ultrastructural studies on the spleen in sickle cell disease.

In addition, the article will be used for educational purposes in the courses:

Pathology Resident Training in Biological Electron Microscopy.

Phase II, Pathology.

Fellowship in Biological Fine Structure.

PHT 520, Introductory Electron Microscopy.

PHT 522, Renal Biopsies.

PHT 523, Special Techniques in Histochemistry and Neuroanatomy.

The primary objective of these courses is to familiarize the students with the capabilities, applications, and technical aspects of electron microscopy as it applies to biopathology. Article ordered: September 6, 1977.

Docket No. 78-00310. Applicant: Saint Francis Hospital, 2230 Liliha Street, Honolulu, Hawaii 96817. Article: Electron Microscope, EM 9S-2. Manufacturer: Carl Zeiss, West Germany. Intended use of article: The article is intended to be used as an integral part of a training program for undergraduate, graduate, and medical students as well as pathology residents. The article is needed for electron microscopic instruction in the following courses: Courses 601 and 602 in Human Pathology which provide a comprehensive review of the pathologic basis of disease, and Course 699 entitled "Directed Research" provides an indepth study of the pathology of aging, nutrition, alcoholism, and immunology. Article ordered: February 15, 1978.

Docket No. 78-00314. Applicant: Veterans Administration Hospital, 500 Foothill Boulevard, Salt Lake City, Utah 84148. Article: Electron Microscope, Model JEM 100CX and accessories. Manufacturer: JEOL Ltd., Japan. Intended use of article: The article is intended to be used for diagnosis of most renal glomerular diseases, for identification of certain poorly differentiated neoplastic cells of origin, and for identification of viral particles, certain liver diseases, certain diseases of hematopoetic cells, and certain environmental elements in lungs of the af-

fected patients. The article will also be used to study and identify the light and heavy element in clinical cases of environmental lung diseases and in experimentally induced pulmonary lesions as well as to study and trace beryllium in cellular immunity, both in vivo and in vitro experimental models. In addition, the article will be used to familiarize the student or resident with the principles, operation and applications of the techniques of TEM, SEM, STEM, and X-ray microanalysis. Article ordered: February 9, 1978.

Comments: No comments have been received with respect to any of the foregoing applications.

Decision: Applications approved. No instrument or apparatus of equivalent scientific value to the foreign articles for such purposes as these articles are intended to be used, was being manufactured in the United States at the time the articles were ordered.

Reasons: Each foreign article to which the foregoing applications relate is a conventional transmission electron microscope (CTEM). The description of the intended research and/or educational use of each article establishes the fact that a comparable CTEM is pertinent to the purposes for which each is intended to be used. We know of no CTEM which was being manufactured in the United States either at the time of order of each article described above or at the time of receipt of application by the U.S. Customs Service.

The Department of Commerce knows of no other instrument or apparatus of equivalent scientific value to any of the foreign articles to which the foregoing applications relate, for such purposes as these articles are intended to be used, which was being manufactured in the United States either at the time of order or at the time of receipt of application by the U.S. Customs Service.

(Catalog of Federal Domestic Assistance Program No. 11.105, Importation of Duty-Free Educational and Scientific Materials.)

RICHARD M. SEPPA,
Director, Statutory Import Programs Staff.

[FR Doc. 78-25493 Filed 9-8-78; 8:45 am]

[3510-25]

COLD SPRING HARBOR LABORATORY, ET AL.

Consolidated Decision on Applications for Duty-Free Entry of Electron Microscopes

The following is a consolidated decision on applications for duty-free entry of electron microscopes pursuant to section 6(c) of the Educational, Scientific, and Cultural Materials Importation Act of 1966 (Pub. L. 89-651, 80 Stat 897) and the regulations issued thereunder, as amended (15 CFR 301). (See especially § 301.11(e).)

A copy of the record pertaining to each of the applications in this consolidated decision is available for public review between 8:30 a.m. and 5 p.m. in Room 6886C of the Department of Commerce Building, at 14th and Constitution Avenue NW., Washington, D.C. 20230.

Docket No. 78-00266. Applicant: Cold Spring Harbor Laboratory, P.O. Box 100, Cold Spring Harbor, N.Y. 11724. Article: Electron Microscope, Model EM 10A, and accessories. Manufacturer: Carl Zeiss, West Germany. Intended use of article: The article is intended to be used as the primary tool in the examination of the organization of chromosomes and viruses. Primary focus will be on the patterns of RNA transcription, processing, and splicing of the DNA tumor viruses: adenovirus, simian virus 40, and their hybrids. Application received by Commissioner of Customs: June 8, 1978.

Docket No. 78-00268. Applicant: The University of Texas Health Scence Center, Department of Cell Biology, 5323 Harry Hines Boulevard, Dallas, Tex. 75235. Article: Electron Microscope, Model JEM 100CX, and accessories. Manufacturer: JEOL Ltd., Japan. Intended use of article: The article is intended to be used in high resolution biological studies of cell membranes and other cellular organelles. In addition, freeze etch replicas will be studied as well as critical point dried whole cells. Most of the materials studied will be mammalian tissue associated with the nervous system, including nerve and muscle cell cultures. Also studied will be the distribution of proteins which reside within the cell membranes. Various antibody and protein tagging techniques will also be investigated. Experiments will be conducted to (1) resolve the relationship of microtubules and microfilaments in nerve and muscle cell cultures, (2) to study changes in the functional activity states of membranes, and (3) to study membrane changes during induced cell and tissue transformation. The article will also be used by graduate students, post-doctoral fellows, and faculty members in Graduate School of Biomedical Sciences. Article ordered: March 17, 1978.

Docket No. 78-00277. Applicant: Midwest Research Institute/Solar Energy Research Institute Division, 1536 Cole Boulevard, Golden, Colo. 80401. Article: Electron Microscope, Model JEM 100CX/SEG/SQH, and accessories. Manufacturer: JEOL Ltd., Japan. Intended use of article: The article is intended to be used to examine and chemically analyze materials of all kinds—metals, polymers, ceramics, semiconductors, composites, and biological specimens—using magnifications from 10 to more than 300,000 times. Specific uses will involve failure analyses of solar devices, characterization of solar materials under development and support of basic studies by correlating material microstructure with performance. Article ordered: December 29, 1978.

Docket No. 78-00280. Applicant: University of California, San Diego, Department of Biology, B-022, La Jolla, Calif. 92093. Article: Electron Microscope, Model H-300, and accessories. Manufacturer: Hitachi Ltd., Japan. Intended use of article: The article is intended to be used to study biological structures at molecular, cellular, and tissue levels. Considerable effort will be focused on the analysis at many levels of the structure of nucleic acids. A detailed base sequence analysis will be carried out on transfer RNA molecules and the genetic regulatory regions of DNA of both prokaryotic and eukaryotic organisms. The structure of covalently closed circular DNA form and replicating forms of bacterial plasmids (extrachromosomal genetic element) that are naturally occurring and have been constructed in vitro, will be carried out with electron microscopy techniques. Another major project involves the fine structure of the RNA genome in defective animals viral particles and the mechanism of assembly of the bacterial virus 0X174. In addition, the article will be used for educational purposes in the course Bio 204—Electron microscopy for students in biology. Article ordered: March 31, 1978.

Docket No. 78-00281. Applicant: University of California, San Diego, Department of Biology, B-022, La Jolla, Calif. 92093. Article: Electron Microscope, Model H-300, and accessories. Manufacturer: Hitachi Ltd., Japan. Intended use of article: The article is intended to be used to study biological structures at molecular, cellular, and tissue levels. Considerable effort will be focused on the analysis at many levels of the structure of nucleic acids. A detailed base sequence analysis will be carried out on transfer RNA molecules and the genetic regulatory regions of DNA of both prokaryotic and eukaryotic organisms. The structure of covalently closed circular DNA form and replicating forms of bacterial plasmids (extrachromosomal genetic element) that are naturally occurring and have been constructed in vitro, will be carried out with electron microscopy techniques. Another major project involves the fine structure of the RNA genome in defective animal viral particles and the mechanism of assembly of the bacterial virus 0X174. In addition, the article will be used for educational purposes in the course Bio 204—Electron microscopy for students

in biology. Article ordered: March 31, 1978.

Comments: No comments have been received with respect to any of the foregoing applications.

Decision: Applications approved. No instrument or apparatus of equivalent scientific value to the foreign articles for such purposes as these articles are intended to be used, was being manufactured in the United States at the time the articles were ordered.

Reasons: Each foreign article to which the foregoing applications relate is a conventional transmission electron microscope (CTEM). The description of the intended research and/or educational use of each article establishes the fact that a comparable CTEM is pertinent to the purposes for which each is intended to be used. We know of no CTEM which was being manufactured in the United States either at the time of order of each article described above or at the time of receipt of application by the U.S. Customs Service.

The Department of Commerce knows of no other instrument or apparatus of equivalent scientific value to any of the foreign articles to which the foregoing applications relate, for such purposes as these articles are intended to be used, which was being manufactured in the United States either at the time of order or at the time of receipt of application by the U.S. Customs Service.

(Catalog of Federal Domestic Assistance Program No. 11.105, Importation of Duty-Free Educational and Scientific Materials.)

RICHARD M. SEPPA,
Director, Statutory Import Programs Staff.

[FR Doc. 78-25490 Filed 9-8-78; 8:45 am]

[3510-25]

EAST CAROLINA UNIVERSITY

Decision of Application for Duty-Free Entry of Scientific Article

The following is a decision on an application for duty-free entry of a scientific article pursuant to section 6(c) of the Educational, Scientific, and Cultural Materials Importation Act of 1966 (Pub. L. 89-651, 80 Stat. 897) and the regulations issued thereunder, as amended (15 CFR 301).

A copy of the record pertaining to this decision is available for public review between 8:30 a.m. and 5 p.m. in Room 6886C of the Department of Commerce Building, at 14th and Constitution Avenue NW., Washington, D.C. 20230.

Docket No. 78-00241. Applicant: East Carolina University, Greenville, N.C. 27834. Article: Automatic Recording Spectropolarimeter, Model J-40C, and accessories. Manufacturer: Japan Spectroscopic Co., Ltd., Japan. Intended use of article: The article is intended to be used in investigations of the circular dichroism spectra of the peptides, proteins, and nucleic acids and on combinations of these with metal ions and other small molecules. These measurements give detailed information relative to the three-dimensional interrelationships among the species present. The article will also be used in the course Biochemistry 6325, Analytical Methods and Techniques, to give student experience in the theory and use of instrumentation and laboratory procedures.

Comments: No comments have been received with respect to this application.

Decision: Application approved. No instrument or apparatus of equivalent scientific value to the foreign article, for such purposes as this article is intended to be used, is being manufactured in the United States.

Reasons: The foreign article provides the capability for circular dichroism in the 185 to 1000 nanometer range. The Department of Health, Education, and Welfare advises in its memorandum dated August 10, 1978, that (1) the capability of the foreign article described above is pertinent to the applicant's intended purpose, and (2) it knows of no domestic instrument of or apparatus of equivalent scientific value to the foreign article for the applicant's intended use.

The Department of Commerce knows of no other instrument or apparatus of equivalent scientific value to the foreign article, for such purposes as this article is intended to be used, which is being manufactured in the United States.

(Catalog of Federal Domestic Assistance Program No. 11.105, Importation of Duty-Free Educational and Scientific Materials.)

RICHARD M. SEPPA,
Director, Statutory Import Programs Staff.

[FR Doc. 78-25476 Filed 9-8-78; 8:45 am]

[3510-25]

JOHNS HOPKINS UNIVERSITY

Decision on Application for Duty-Free Entry of Scientific Article

The following is a decision on an application for duty-free entry of a scientific article pursuant to section 6(c) of the Educational, Scientific, and Cultural Materials Importation Act of 1966 (Pub. L. 89-651, 80 Stat. 897) and the regulations issued thereunder, as amended (15 CFR 301).

A copy of the record pertaining to this decision is available for public review between 8:30 a.m. and 5 p.m. in Room 6886C of the Department of Commerce Building, at 14th and Constitution Avenue NW, Washington, D.C. 20230.

Docket No. 78-00231. Applicant: The Johns Hopkins University, 34th and Charles Street, Baltimore, Md. 21218. Article: Gammacell 40 Small Animal Irradiator and accessories. Manufacturer: Atomic Energy of Canada, Ltd., Canada. Intended use of article: The article is intended to be used in research directed along the lines of studying adoptive immunotherapy of cancer (hematopoietic and lymphoid grafts), and in a program of hematopoietic cell support for bone marrow transplant patients. Experiments to be conducted will include preparation of a large number of rats and mice with lethal whole body irradiation in order to study repopulation of hematopoietic cells (spleen colony forming units) and the effect of drugs on these cells, adoptive transfer of immune systems (transplantation of antigens and spleen cells to lethally irradiated mice), induction of graft versus host disease, and study of its sequellae on mice, rats, hamsters, and rabbits (lethal irradiation followed by allogenic hematopoietic and lymphoid cells). The article will also be used to kill lymphoid cells and tumor cells used in tumor immunology and antigen matching studies, such as the mixed lymphocyte cultures and 51 Chromium release studies. Other studies include the irradiation of blood products for totally immunosuppressed patients.

Comments: No comments have been received with respect to this application.

Decision: Application approved. No instrument or apparatus of equivalent scientific value to the foreign article, for such purposes as this article is intended to be used, is being manufactured in the United States.

Reasons: The foreign article provides a dual Cesium 137 source which provides uniform dose distribution (±5%) and a sample cavity with a depth of 4.9 inches and a 13-inch diameter for a total volume of 646 cubic inches. The Department of Health, Education, and Welfare advises in its memorandum dated August 10, 1978, that (1) the capability of the foreign article described above is pertinent to the applicant's intended purpose, and (2) it knows of no domestic instrument or apparatus of equivalent scientific value to the foreign article for the applicant's intended use.

The Department of Commerce knows of no other instrument or apparatus of equivalent scientific value to the foreign article, for such purposes as this article is intended to be used, which is being manufactured in the United States.

(Catalog of Federal Domestic Assistance Program No. 11.105, Importation of Duty-Free Educational and Scientific Materials.)

RICHARD M. SEPPA,
Director, Statutory Import Programs Staff.

[FR Doc. 78-25481 Filed 9-8-78; 8:45 am]

[3510-25]

LOUISIANA STATE UNIVERSITY AND AGRICULTURE AND MECHANICAL COLLEGE, ET AL.

Applications for Duty-Free Entry of Scientific Articles

The following are notices of the receipt of applications for duty-free entry of scientific articles pursuant to section 6(c) of the Educational, Scientific, and Cultural Materials Importation Act of 1966 (Pub. L. 89-651; 80 Stat. 897). Interested persons may present their views with respect to the question of whether an instrument or apparatus of equivalent scientific value for the purposes for which the article is intended to be used is being manufactured in the United States. Such comments must be filed in triplicate with the Director, Statutory Import Programs Staff, Bureau of Trade Regulation, U.S. Department of Commerce, Washington, D.C. 20230, by October 2, 1978.

Regulations (15 CFR 301.9) issued under the cited act prescribe the requirements for comments.

A copy of each application is on file, and may be examined between 8:30 a.m. and 5 p.m., Monday through Friday, in room 6886C of the Department of Commerce Building, 14th and Constitution Avenue NW., Washington, D.C. 20230.

Docket No. 78-00356. Applicant: Louisiana State University and Agriculture and Mechanical College, Baton Rouge, La. 70803. Article: Standard Motor Control Unit, No. 34-07-71 (to fit existing Carl Zeiss Electron Microscope 10). Manufacturer: Carl Zeiss, West Germany. Intended use of article: The article is intended to be used to power three accessories to an electron microscope which is being used for the study of biological materials to learn the processes of disease at the cellular level, the location of specific viruses within cells and ultrastructure as it involves physiological function. The article will also be used in the courses "Ultrastructure" and "Cytochemistry" to train graduate students in the use of electron microscopy and to suggest special techniques that might be useful in their particular research projects. Application received by Commissioner of Customs: July 27, 1978.

Docket No. 78-00357. Applicant: The University of Texas Health Science Center at Houston, Medical School, P.O. Box 20708, Houston, Tex. 77025. Article: Isotope Ratio Mass Spectrometer, Model 602C and Accessories. manufacturer: VG Micromass Ltd., United Kingdom. Intended use of article: The article is intended to be used in the following research areas:

(1) Investigation of mechanisms of action of aldolases—to provide an understanding into the metabolism of living cells and the intricate mechanisms of their enzyme catalysts.

(2) Studies of stable isotopes in metabolism in man.

(3) Study of nutrition in man using ^{15}N—to provide a detailed insight into the various processes which govern the uptake and utilization of one of the major constituents of man's diet, protein.

In addition, the article will be used to teach the techniques of utilizing these tracers and will include extensive use by students not familiar with sophisticated instrumentation which will involve a special course, "Instrumental Methods in Medical Research." Application received by Commissioner of Customs: July 28, 1978.

Docket No. 78-00359. Applicant: National Oceanic and Atmospheric Administration, Climate and GARP Office, c/o Travel and Transportation Branch, AD17, 6010 Executive Boulevard, Room 101, Rockville, Md. 20852. Article: FGGE NAVAID Sounding System and Installation Team Spares Kit. Manufacturer: Vaisala Oy, Finland. Intended use of article: The article is intended to be used for the investigation of pressure, temperature, humidity, and wind to provide international data set for global weather model. Applicaton received by Commissioner of Customs: July 28, 1978.

Docket No. 78-00360. Applicant: The University of Texas System Cancer Center, 6723 Bertner, Houston, Tex. 77030. Article: Multi-Parameter Flow Cytophotometer ICP-22 and accessories. Intended use of article: Phywe Co., West Germany. Intended use of article: The article is intended to be used to conduct simultaneously measurements of cellular DNA and RNA as well as DNA in protein and content. Cells from long-term cultures or from biopsies specimens from patients with leukemia and solid tumors, will be processed to yield single cell suspensions and will then be stained specifically for DNA and RNA or DNA and protein. These cellular properties will be utilized to identify cell subpopulations and heterogenous samples and to further characterize malignant versus normal cells. Both clinical oncology fellows and candidates of the Graduate School of Biomedical Sciences will continue to be involved in the research project, and primary emphasis of the laboratory has been on automated cytology. Application received by Commissioner of Customs: July 31, 1978.

Docket No. 78-00361. Applicant: The University of Texas System Cancer Center, 6723 Bertner, Houston, Tex. 77030. Article: Phywe Model ICP 11, Pulse Cytophotometer and accessories. Manufacturer: Phywe Co., West Germany. Intended use of article: The article is intended to be used for research in the areas of *In Vitro* and *In Vivo* cell kinetics. Cultured or human biopsy material will be processed to obtain a single cell suspension, using methods previously developed in this laboratory and published in *Cancer Research* and in *Blood*. Cells will then be fixed in ethanol and stained with 2 fluorochromes, ethidium bromide and mithramycin, specifically for DNA. Additional RN'ase treatment will follow. These measurements serve to identify the cell cycle stage distribution of cultured and human tumor cells as well as to identify aneuploid abnormalities. Both clinical oncology fellows and candidates of the Graduate School of Biomedical Sciences will continue to be involved in the research project, and primary emphasis of the laboratory has been on automated cytology. Application received by Commissioner of Customs: July 31, 1978.

Docket No. 78-00362. Applicant: University of Tennessee, College of Veterinary Medicine, P.O. Box 1071, Knoxville, Tenn. 37901. Article: Electron Microscope, Model 201C and Watt Haskris Water Chiller with accessories.

Manufacturer: Philips Electronics Instruments NVD, the Netherlands. Intended use of article: The article is intended to be used in conducting the following experiments:

(1) Hereditary muscular dystrophy—trace the sequential changes in effective muscles to determine the effect of age on the lesions from prenatal to adult life.

(2) The retinas of dogs under anesthesia are exposed to various intensities of light and the retinas examined by electron microscopy for extent, rate and type of retinal degenerative change.

(3) Animals with experimental myocardial ischemia are treated with lidocaine and the extent of the myocardial degeneration and necrosis is compared with that of controls.

(4) Specimens of argentaffin cells will be obtained from different species of animals for anatomical characterization.

Application received by Commissioner of Customs: July 31, 1978.

Docket No. 78-00363. Applicant: Duke University, Department of Physics, Durham, N.C. 27706. Article: PS-400P Coherent Nuclear Magnetic Resonance (NMR) Pulse Spectrometer with one tunable probe head and receiver transmitter. Manufacturer: Spin-Tech Electronic Ltd., Canada. Intended use of article: The article is intended to be used for studies on solid hydrogen deuterium and helium-3 which involves investigation of the orientational forces acting on the mole-

cules. The article will also be used by students working for the doctorate in physics. Application received by Commissioner of Customs: August 1, 1978.

Docket No. 78-00364. Applicant: Ohio Agricultural Research and Development Center, Madison Hill, Wooster, Ohio 44691. Article: Electron Microscope, Model EM 400 and accessories. Manufacturer: Philips Electronics Instruments NVD, the Netherlands. Intended use of article: The article is intended to be used for research purposes on the following:

1. Virus diseases of the following: Corn, soybeans, berries, grasses, ornamentals, swine, cattle, and animal cell culture.
2. Bacterial DNA characterization.
3. Rumen bacteria morphology.
4. Nematode ultrastructure and morphology.
5. PBB-PCB toxicity in cattle.
6. Receptor morphology of insect antennae.
7. Mammillary development in cattle.
8. Viral serology (plant and animal).
9. Leaf surface bacterial relationships.
10. Muscle fiber degeneration (poultry and animals).
11. General animal pathology.
12. Cellular level effects of pollution and biological toxins.

Application received by Commissioner of Customs: August 1, 1978.

Docket No. 78-00365. Applicant: University of Oregon, Inst. of Molecular Biology, Eugene, Oreg. 97403. Article: Rotating anode X-ray diffraction generator, Model GX 21 and accessories. Manufacturer: Marconi-Elliott Avionics Ltd., United Kingdom. Intended use of article: The article is intended to be used to determine the three-dimensional structure of large biological molecules (proteins). The article will also be used in the training as five postdoctoral fellows in the group conducting this research.

Application received by Commissioner of Customs: August 1, 1978.

Docket No. 78-00366. Applicant: University of Pennsylvania, 3400 Walnut Street, Franklin Building, Philadephia, Pa. 19104. Article: NMR Spectrometer, Model WH-360/180 and accessories. Manufacturer: Schweiz Spectrospin AG, Switzerland. Intended use of article: The article is intended to be used for (1) identifying chemical compounds of small molecular weight, (2) determining the structure of macromolecules such as enzymes and nucleic acids in solution, and (3) studying the interaction between enzymes and substrates. Specific examples of the research to be conducted are:

(a) Kinetics of oxygen-18 exchange between inorganic phosphate and water catalyzed by myosin subfragment, using the ^{18}O-shift in ^{31}P NMR.
(b) Determination of membrane potential by use of ^{13}C NMR and a shift reagent to measure ionic-probe concentration gradients across the cell membrane.
(c) H NMR studies of hemoproteins substituted with cobaltous hemes.

Many of the users of the facility are postdoctoral fellows or graduate students who learn about the application of NMR to biophysical and biochemical problems.

In addition, the article will be used in classes in biophysics, a course which deals with the application of various techniques, including NMR, to the probing of molecular structure. Application received by Commissioner of Customs: August 1, 1978.

(Catalog of Federal Domestic Assistance Program No. 11.105, Importation of Duty-Free Educational and Scientific Materials.)

RICHARD M. SEPPA,
Director, Statutory Import Programs Staff.

[FR Doc. 78-25494 Filed 9-8-78; 8:45 am]

[3510-25]

MOUNT SINAI SCHOOL OF MEDICINE

Decision on Application for Duty-Free Entry of Scientific Article

The following is a decision on an application for duty-free entry of a scientific article pursuant to section 6(c) of the Educational, Scientific, and Cultural Materials Importation Act of 1966 (Pub. L. 89-651, 80 Stat. 897) and the regulations issued thereunder as amended (15 CFR 301).

A copy of the record pertaining to this decision is available for public review between 8:30 a.m. and 5 p.m. in Room 6886C of the Department of Commerce Building, at 14th and Constitution Avenue NW., Washington, D.C. 20230.

Docket No. 78-00230. Applicant: Mount Sinai School of Medicine, 5th Avenue and 100th Street, New York, N.Y. 10029. Article: 1 Hemofiltration Unit BF 910 and accessories. Manufacturer: Bellco-Germany GmbH, West Germany. Intended use of article: The article is intended to be used in studies which involve the comparative clinical trial of a new form of artificial kidney treatment. This treatment consists in principle in the separation of an ultrafiltrate for blood of uremic patients and replacement by a physiological solution.

Comments: No comments have been received with respect to this application.

Decision: Application approved. No instrument or apparatus of equivalent scientific value to the foreign article, for such purposes as this article is intended to be used, is being manufactured in the United States.

Reasons: The foreign article provides exact balancing of the fluid volumes generated by the ultrafiltrate pump with the replacement solution returned to the patient. The Department of Health, Education, and Welfare advises in its memorandum dated August 10, 1978, that (1) the capability of the foreign article described above is pertinent to the applicant's intended purpose and (2) it knows of no domestic instrument of or apparatus of equivalent scientific value to the foreign article for the applicant's intended use.

The Department of Commerce knows of no other instrument or apparatus of equivalent scientific value to the foreign article, for such purposes as this article is intended to be used, which is being manufactured in the United States.

(Catalog of Federal Domestic Assistance Program No. 11.105, Importation of Duty-Free Educational and Scientific Materials.)

RICHARD M. SEPPA,
Director, Statutory Import Programs Staff.

[FR Doc. 78-25477 Filed 9-8-78; 8:45 am]

[3510-25]

NATIONAL BUREAU OF STANDARDS

Decision on Application for Duty-Free Entry of Scientific Article

The following is a decision on an application for duty-free entry of a scientific article pursuant to section 6(c) of the Educational, Scientific, and Cultural Materials Importation Act of 1966 (Pub. L. 89-651, 80 Stat. 897) and the regulations issued thereunder, as amended (15 CFR 301).

A copy of the record pertaining to this decision is available for public review between 8:30 a.m. and 5 p.m. in Room 6886C of the Department of Commerce Building, at 14th and Constitution Avenue NW., Washington, D.C. 20230.

Docket No. 78-00227. Applicant: National Bureau of Standards, Washington, D.C. 20234. Article: Power and energy standard (thermal instrument). Manufacturer: Physikalisch Technische Bundesanstalt, West Germany. Intended use of article: The article is intended to be used as a transfer standard for power and energy measurements as part of the national measurement system. Specifically, the article will be used to develop a more rapid and accurate calibration system for solid state devices.

Comments: No comments have been received with respect to this application.

Decision: Application approved. No instrument or apparatus of equivalent scientific value to the foreign article, for such purposes as this article is intended to be used, is being manufactured in the United States.

Reasons: The application is a resubmission of Docket No. 78-00040 which

was denied without prejudice to resubmission on March 31, 1978, for informational deficiencies. The foreign article provides an accuracy of 0.001 percent. The National Bureau of Standards advises in its memorandum dated July 24, 1978, that (1) the capability of the foreign article described above is pertinent to the applicant's intended purpose, and (2) it knows of no domestic instrument or apparatus of equivalent scientific value to the foreign article for the applicant's intended use.

The Department of Commerce knows of no other instrument or apparatus of equivalent scientific value to the foreign article, for such purposes as this article is intended to be used, which is being manufactured in the United States.

(Catalog of Federal Domestic Assistance Program No. 11.105, Importation of Duty-Free Educational and Scientific Materials.)

RICHARD M. SEPPA,
Director, Statutory Import Programs Staff.

[FR Doc. 78-25478 Filed 9-8-78; 8:45 am]

[3510-25]

NATIONAL EYE INSTITUTE, NIH

Decision on Application for Duty-Free Entry of Scientific Article

The following is a decision on an application for duty-free entry of a scientific article pursuant to section 6(c) of the Educational, Scientific, and Cultural Materials Importation Act of 1966 (Pub. L. 89-651, 80 Stat. 897) and the regualtions issued thereunder as amended (15 CFR 301).

A copy of the record pertaining to this decision is available for public review between 8:30 a.m. and 5 p.m. in room 6886C of the Department of Commerce Building, at 14th and Constitution Avenue, NW., Washington, D.C. 20230.

Docket No. 78-00235. Applicant: National Eye Institute, DHEW, NIH, Building 10, Bethesda, Md. 20014. Article: LKB 2128-010 Ultrotome IV Ultramicrotome and Accessories. Manufacturer: LKB Produkter AB, Sweden. Intended use of article: The article is intended to be used to section human and animal tissues which will be used in investigations to further basic knowledge on cell and tissue ultrastructure and to reveal, at the ultrastructural level, the enzyme localization and distribution in cells and tissues developing under normal and pathological conditions.

Comments: No comments have been received with respect to this application.

Decision: Application approved. No instrument or apparatus of equivalent scientific value to the foreign article, for such purposes as this article is intended to be used, is being manufactured in the United States.

Reasons: The foreign article has a cutting speed range of 0.1 to 50 millimeters/second (mm/sec). The most closely comparable domestic instrument is the model MT-2B ultramicrotome manufactured by Ivan Sorvall, Inc. (Sorvall). The Sorvall model MT-2B ultramicrotome has a cutting speed range of 0.09 to 3.2 mm/sec. We are advised by the National Bureau of Standards (NBS) in its memorandum dated July 26, 1978 that (1) cutting speeds in the excess of 4mm/sec. are pertinent to the applicant's research studies and (2) the domestic instrument does not provide the pertinent feature. We, therefore, find that the Model MT-2B ultramicrotome is not of equivalent scientific value to the foreign article for such purposes as this article is intended to be used.

The Department of Commerce knows of no other instrument or apparatus of equivalent scientific value to the foreign article, for such purposes as this article is intended to be used, which is being manufactured in the United States.

(Catalog of Federal Domestic Assistance Program No. 11.105, Importation of Duty-Free Educational and Scientific Materials.)

RICHARD M. SEPPA,
Director, Statutory Import Programs Staff.

[FR Doc. 78-25479 Filed 9-8-78; 8:45 am]

[3510-25]

PURDUE UNIVERSITY

Decision on Application for Duty-Free Entry of Scientific Article

The following is a decision on an application for duty-free entry of a scientific article pursuant to section 6(c) of the Educational, Scientific, and Cultural Materials Importation Act of 1966 (Pub. L. 89-651, 80 Stat. 897) and the regulations issued thereunder as amended (15 CFR 301).

A copy of the record pertaining to this decision is available for public review between 8:30 a.m. and 5 p.m. in room 6886C of the Department of Commerce Building, at 14th and Constitution Avenue, NW., Washington, D.C. 20230.

Docket No. 78-00212. Applicant: Purdue University, West Lafayette, Ind. 47907. Article: Complete unit, 3-stage axial compressor with variable speed motor, speed control, torque, flow and speed measuring devices. Manufacturer: IDOS Ltd., United Kingdom. Intended use of article: The article is intended to be used for the instruction on the aerodynamic theory, performance analysis and operating characteristics of axial flow compressors covering the following topics: Blade element, fluid deflection and loss performance radial equilibrium theory, stage design and off-design performance, stall and surge phenomena, secondary flow phenomena, and effects of inlet flow distortion on compressor performance. The courses involved will include: ME433 Principles of Turbomachinery, ME433 Gas Turbine Engines, ME533 Advanced Turbomachiner, and ME/AAE533 Air Breathing Propulsion.

Comments: No comments have been received with respect to this application.

Decision: Application approved. No instrument or apparatus of equivalent scientific value to the foreign article, for such purposes as this article is intended to be used, is being manufactured in the United States.

Reasons: The foreign article provides a variable blade setting. The National Bureau of Standards advises in its memorandum dated July 24, 1978 that (1) the capability of the foreign article described above is pertinent to the applicant's intended purpose and (2) it knows of no domestic instrument of or apparatus of equivalent scientific value to the foreign article for the applicant's intended use.

The Department of Commerce knows of no other instrument or apparatus of equivalent scientific value to the foreign article, for such purposes as this article is intended to be used, which is being manufactured in the United States.

(Catalog of Federal Domestic Assistance Program No. 11.105, Importation of Duty-Free Educational and Scientific Materials.)

RICHARD M. SEPPA,
Director, Statutory Import Programs Staff.

[FR Doc. 78-25480 Filed 9-8-78; 8:45 am]

[3510-25]

SANDIA LABORATORIES

Decision on Application for Duty-Free Entry of Scientific Article

The following is a decision on an application for duty-free entry of a scientific article pursuant to section 6(c) of the Educational, Scientific, and Cultural Materials Importation Act of 1966 (Pub. L. 89-651, 80 Stat. 897) and the regulations issued thereunder, as amended (15 CFR 301).

A copy of the record pertaining to this decision is available for public review between 8:30 a.m. and 5 p.m. in Room 6886C of the Department of Commerce Building, at 14th and Constitution Avenue NW., Washington, D.C. 20230.

Docket No. 78-00217. Applicant: Sandia Laboratories, Kirtland AFB, East Albuquerque, N. Mex. 87115. Article: 2(Two) CO_2 Lasers TEA 103-2 and

accessories. Manufacturer: Lumonics Research, Ltd., Canada. Intended use of article: The article will be used to identify and study chemical processes that can be stimulated by laser radiation. This work will emphasize the selection of laser frequencies that will stimulate molecular vibrational frequencies and thus lead to the production of molecular radicals.

Comments: No comments have been received with respect to this application.

Decision: Application approved. No instrument or apparatus of equivalent scientific value to the foreign article, for such purposes as this article is intended to be used, is being manufactured in the United States.

Reasons: The foreign article a pulsed laser provides 15 joules output per pulse. The National Bureau of Standards advises in its memorandum dated July 24, 1978, that (1) the capability of the foreign article described above is pertinent to the applicant's intended purpose, and (2) it knows of no domestic instrument of or apparatus of equivalent scientific value to the foreign article for the applicant's intended use.

The Department of Commerce knows of no other instrument or apparatus of equivalent scientific value to the foreign article, for such purposes as this article is intended to be used, which is being manufactured in the United States.

(Catalog of Federal Domestic Assistance Program No. 11.105, Importation of Duty-Free Educational and Scientific Materials.)

RICHARD M. SEPPA,
Director, Statutory Import Programs Staff.

[FR Doc. 78-25482 Filed 9-8-78; 8:45 am]

[3510-25]

UNIVERSITY OF CALIFORNIA, DEPARTMENT OF CHEMISTRY, ET AL.

For Duty-Free Entry of Scientific Articles

The following are notices of the receipt of applications for duty-free entry of scientific articles pursuant to section 6(c) of the Educational, Scientific, and Cultural Materials Importation Act of 1966 (Pub. L. 89-651; 80 Stat. 897). Interested persons may present their views with respect to the question of whether an instrument or apparatus of equivalent scientific value for the purposes for which the article is intended to be used is being manufactured in the United States. Such comments must be filed in triplicate with the Director, Statutory Import Programs Staff, Bureau of Trade Regulation, U.S. Department of Commerce, Washington, D.C. 20230, by October 2, 1978.

Regulation (15 CFR 301.9) issued under the cited act prescribe the requirements for comments.

A copy of each application is on file, and may be examined between 8:30 a.m. and 5 p.m., Monday through Friday, in Room 6886C of the Department of Commerce Building, 14th and Constitution Avenue NW., Washington, D.C. 20230.

Docket No. 78-00367. Applicant: University of California, Department of Chemistry, 405 Hilgard Avenue, Los Angeles, Calif. 90024. Article: Elliott GX-21 Rotating Anode X-ray generator and accessories. Manufacturer: Marconi-Elliott Avionics, Ltd., United Kingdom. Intended use of article: The article is intended to be used as a source of X-rays for investigations of the source of matter using diffraction techniques. The majority of the specimens will be crystalline and noncrystalline specimens of biological origin, with the emphasis being on single crystal X-ray diffraction. Some work will be done on single crystals of small molecules and on gases adsorbed onto solid supports. A significant portion of the research to be performed on this instrument will be performed by graduate and postdoctoral trainees who are learning to perform X-ray diffraction experiments while participating in fundamental research. For a very small fraction of the time, the instrument may be used for a laboratory course in diffraction methods. Application received by Commissioner of Customs: August 1, 1978.

Docket No. 78-00368. Applicant: The Ohio State University, Department of Pharmacology, 5086 Graves Hall, 333 West 10th Avenue, Columbus, Ohio 43210. Article: Varian Model MAT 311A Double Focusing High Resolution Gas Chromatograph/Mass Spectrometer System and Accessories. Manufacturer: Varian MAT G.m.b.H., West Germany. Intended use of article: The article is intended to be used to perform studies of a variety of endogenous and exogenous organic compounds in biological fluids (urine, blood, cerebrospinal fluid, and tissues) from man and animal. The experiments to be conducted will include the following:

(1) Mapping of the contents of the cerebrospinal fluid and identification and quantification of abnormal constituents,

(2) Analysis of blood and tissue in a similar way,

(3) Investigations of functional changes in cellular processes, which will bring mass spectrometric analysis down to the cellular level, and

(4) Study of turn-over rates and metabolism of some endogenous compounds labeled with stable isotopes.

The article will also be used in courses 794 Pharmacology: Biomedical Mass Spectrometry and Chromatography and 999 Pharmacology: Dissertation Research for demonstration of the different techniques and principles, training in the operation of the system and use of the system in solving research problems. Application received by Commissioner of Customs: August 1, 1978.

Docket No. 78-00369. Applicant: NASA/Goddard Space Flight Center, Greenbelt Road, Greenbelt, Md. 20771. Article: Scanning Electron Microscope, Model PSEM-500X and accessories. Manufacturer: Philips Electronics Instruments NVD, The Netherlands. Intended use of article: The article is intended to be used in materials research programs covering a broad spectrum of applications. It will also be used extensively in the failure analysis of materials and spacecraft components both as a microscope and an electron microprobe. Specific uses will include the following:

(a) To identify elements present in a specimen, determine their distribution and concentration on a microscopic level,

(b) To conduct fractographic studies of metals such as 301 and 17-7 PH stainless steels and 6061 aluminum,

(c) To conduct diffusion studies of noble metals into base metal matrices such as the diffusion of gold into Kovar (an iron-nickel-cobalt alloy),

(d) To characterize the microstructure of alloys and weldments, and

(e) To determine phase identification of grain boundary precipitates in alloy research. Application received by Commissioner of Customs: August 1, 1978.

Docket No. 78-00370. Applicant: The Regents of the University of California, Riverside, Materiel Management Department, Riverside, Calif. 92521. Article: Electron Microscope, Model EM 400 with ±60° Tilt Goniometer and Accessories. Manufacturer: Philips Electronics Instruments NVD, The Netherlands. Intended use of article: The article is intended to be used for research in plant cell biology, as well as for other investigations on cell ultrastructure, development, and function. In particular the article will be used for examinations of thin sections of tissue and isolated material, negatively stained and shadowed preparations, and freeze-fractured and freeze-etched material. Three-dimensional determination of cell, organelle, and membrane organization will also be done, which includes spatial mapping of structural features of stereological determinations of their interrelationships. Determinations of structural relations integrated in series from the tissue through the cell to the ultrastructural level will be done. With the features of scanning electron microscopy and elemental analysis, which

can be easily added to this instrument, identifications of particular atomic elements and the determination of their localization, distribution, and relative quantities within tissues and cells will be investigated. In addition, the article will be used in the course, Biology 211, to teach students the principles of specimen preparation and electron optics, as well as how to use the electron microscope. Application received by Commissioner of Customs: August 1, 1978.

Docket No. 78-00371. Applicant: Sandia Laboratories, 1515 Eubank Boulevard SE., Albuquerque, N. Mex. 87123. Article: Imacon 675/51 Ultra Fast Camera System and Accessories. Manufacturer: John Hadland Photonics, Ltd., United Kingdom. Intended use of article: The article is intended to be used for conducting experiments which include continuing laser oscillator development studies, the iodine laser development program and laser produced plasma-target interaction studies. Application received by Commissioner of Customs: August 2, 1978.

Docket No. 78-00372. Applicant: The Roosevelt Hospital, Department of Pathology, 428 West 59th Street, New York, N.Y. 10019. Article: LKB 8800A III Ultramicrotome and accessories. Manufacturer: LKB Produkter AB, Sweden. Intended use of article: The article is intended to be used for sectioning pathological materials including renal biopsy specimens, tumor of various kinds, metabolic diseases for study in order to further basic knowledge on human cell and tissue ultrastructure and to proper classification of tumor. Application received by Commissioner of Customs: August 3, 1978.

Docket No. 78-00373. Applicant: Albany Medical College, Department of Pathology, 47 New Scotland Avenue, Albany, N.Y. 12208. Article: LKB 8800A Ultrotome III Ultramicrotome and accessories. Manufacturer: LKB Produkter AB, Sweden. Intended use of article: The article is intended to be used to prepare specimens for ultrastructural studies of tissues from both human and animal sources. The article, along with the electron microscope, is used for research work on experimental atherosclerosis and also for diagnostic purposes for various tumors. In addition, the article will be used in teaching graduate students who are studying ultrastructural aspects as a part of their research training and goals. Application received by Commissioner of Customs: August 9, 1978.

Docket No. 78-00374. Applicant: Minnesota Department of Health, 717 Delaware Street SE., Minneapolis, Minn. 55440. Article: Electron Microscope, Model H-500-3 and accessories. Manufacturer: Hitachi, Ltd., Japan. Intended use of article: The article is intended to be used for studies of asbestos and other mineral fibrous particles. Experiments will be conducted for enumeration and identification of fibrous mineral particulates in environmental samples, differentiation of structure between true asbestos, and mechanically derived microfibers and identification of various microparticles in the occupational setting to determine exposure levels of the people of the state. This information will be used to determine the health significance of these exposures. Application received by Commissioner of Customs: August 8, 1978.

Docket No. 78-00375. Applicant: The Johns Hopkins University, Charles and 34th Streets, Baltimore, Md. 21218. Article: Electron Microscope, Model EM 10A and accessories. Manufacturer: Carl Zeiss, West Germany. Intended use of article: The article is intended to be used to study the structure of cells, tissues cell organelles, macromolecules, macromolecular assemblies, and viruses in order to learn of the molecular architecture of biological specimens relating to their function. In addition, the article will be used in a course entitled "Optical Methods in Biology" and in the students' thesis research. Application received by Commissioner of Customs: August 4, 1978.

Docket No. 78-00377. Applicant: University of Washington, Department of Pathology, SM-30, Seattle, Wash. 98195. Article: Impulse Cytophotometer, Model 21 and accessories. Manufacturer: Phywe Ag, West Germany. Intended use of article: The article is intended to be used to study the DNA (deoxyribonucleic acid) content and DNA replication of human and animal cells. Experiments will be conducted to determine whether cancer or other clinical manifestations of aneuploidy (abnormal amounts of DNA/cell) can be diagnosed easily and rapidly with this instrument. A major use of the article will be for the courses Pathology 600, 700 and 800 which are research courses for students working on their master's and doctoral degrees. In addition, the article will be used in the course Pathology 530, Human Cytogenetics, to demonstrate modern instrumental methods of chromosomal analysis. Application received by Commissioner of Customs: August 4, 1978.

Docket No. 78-00378. Applicant: The University of Chicago, 5801 South Ellis Avenue, Chicago, Ill. 60637. Article: Goniometer Stage Assembly for EM-300 and Accessories. Manufacturer: Philips Electronics Instruments NVD, The Netherlands. Intended use of article: The article is an accessory to be used in conjuction with an electron microscope in research to determine the structure of fibers of hemoglobin S formed in sickle cell anemia and related sickle cell disease which involve interaction of sickle cell hemoglobin S with other mutant hemoglobins. Investigations will center on (1) Electron microscopic study of negatively stained fibers formed in red cells of individuals homozygous for hemoglobin S and heterozygous for Hb S and other mutant sickling hemoglobins, (2) Freeze fracture of whole sickled cells, (3) "Low dose" microscopy of large two-dimensional arrays of unstained sickle fibers, (4) Analysis of the electron micrographs obtained by the above methods by recently developed Fourier methods will be carried out to determine the three-dimensional mass distribution and orientation of individual molecules within the hemoglobin fiber, and (5) In parallel with electron microscopic studies, methods will be devised to obtain very well oriented fibers of sickle hemoglobin suitable for X-ray diffraction. In addition, the article will be used in the course Biophysics 309—Principles and Practices of Electron Microscopy to teach the use of the electron microscope and specimen preparation. Application received by Commissioner of Customs: August 9, 1978.

(Catalog of Federal Domestic Assistance Program No. 11.105, Importation of Duty-Free Educational and Scientific Materials.)

RICHARD M. SEPPA,
Director, Statutory Import Programs Staff.

[FR Doc. 78-25495 Filed 9-8-78; 8:45 am]

[3510-25]

UNIVERSITY OF CALIFORNIA—LIVERMORE LABORATORY

Decision on Application for Duty-Free Entry of Scientific Article

The following is a decision on an application for duty-free entry of a scientific article pursuant to section 6(c) of the Educational, Scientific, and Cultural Materials Importation Act of 1966 (Pub. L. 89-651, 80 Stat. 897) and the regulations issued thereunder, as amended (15 CFR 301).

A copy of the record pertaining to this decision is available for public review between 8:30 a.m. and 5 p.m. in Room 6886C of the Department of Commerce Building, at 14th and Constitution Avenue NW., Washington, D.C. 20230.

Docket No. 78-00233. Applicant: University of California—Lawrence Livermore Laboratory, P.O. Box 5012, Livermore, Calif. 94550. Article: Two (2) GHz Oscilloscope, Model TSN 660. Manufacturer: Thomson-CSF, France. Intended use of article: The articles are intended to be used to precisely time the occurrence of X-rays at various energies with relation to the inci-

dent laser beam. The articles will be used with the "Dante" experiment which consists of several windowless X-ray detectors with appropriate filtering such that different energy levels of X-ray spectrum are observed.

Comments: No comments have been received with respect to this application.

Decision: Application approved. No instrument or apparatus of equivalent scientific value to the foreign article, for such purposes as this article is intended to be used, is being manufactured in the United States.

Reasons: This application is a resubmission of Docket No. 78-00013 which was denied without prejudice to resubmission on February 13, 1978, for informational deficiencies. The foreign article provides a signal bandwidth (risetime) of 0100 picoseconds and a horizontal sweep rate of 0100 picoseconds-centimeter. The National Bureau of Standards advises in its memorandum dated July 28, 1978, that (1) the capability of the foreign article described above is pertinent to the applicant's intended purpose, and (2) it knows of no domestic instrument of or apparatus of equivalent scientific value to the foreign article for the applicant's intended use.

The Department of Commerce knows of no other instrument or apparatus of equivalent scientific value to the foreign article, for such purposes as this article is intended to be used, which is being manufactured in the United States.

(Catalog of Federal Domestic Assistance Program No. 11.105, Importation of Duty-Free Educational and Scientific Materials.)

RICHARD M. SEPPA,
Director, Statutory Import Programs Staff.

[FR Doc. 78-25483 Filed 9-8-78; 8:45 am]

[3510-25]

UNIVERSITY OF NORTH CAROLINA

Decision on Application for Duty-Free Entry of Scientific Article

The following is a decision on an application for duty-free entry of a scientific article pursuant to section 6(c) of the Educational, Scientific, and Cultural Materials Importation Act of 1966 (Pub. L. 89-651, 80 Stat. 897) and the regulations issued thereunder as amended (15 CFR 301).

A copy of the record pertaining to this decision is available for public review between 8:30 a.m. and 5 p.m. in Room 6886C of the Department of Commerce Building, at 14th and Constitution Avenue NW., Washington, D.C. 20230.

Docket No. 78-00225. Applicant: The University of North Carolina, marine sciences curriculum, 12-5 Venable Hall 045-A, Chapel Hill, N.C. 27514. Article: (5) five recording current meters, Model 4 (RCM-4). Manufacturer: Aanderaa Instruments, Norway. Intended use of article: The article is intended to be used in studies of Gulf Stream meanders and eddies along the North Carolina Continental Shelf and slope. Dominant periods and wavelengths of Gulf Stream fluctuations, and their relation to satellite surface infrared and altimetric images of the stream are the phenomena to be investigated.

Comments: No comments have been received with respect to this application.

Decision: Application denied. An instrument or apparatus of equivalent scientific value to the foreign article, for such purposes as this article in intended to be used, is being manufactured in the United States.

Reasons: In response to question 8, the applicant alleges the foreign article provides the following pertinent features:

(1) Small size and light weight;
(2) Ability to measure pressure, conductivity, currents (speed and direction) and temperature;
(3) An acoustic telemetering function.

The National Oceanic and Atmospheric Administration (NOAA) advises in its memorandum dated June 27, 1978, that features (1), (2), and (3) are provided by the foreign article (with options) and are pertinent to the applicant's intended purposes within the meaning of § 301.2(n) of the regulations. In addition, NOAA advises that a domestic instrument, the Model 9021 (with options), manufactured by Plessey Environmental Systems (Plessey), provides all the features cited above found to be pertinent. As to the specific allegations of the applicant in his reply to question 8 and its subparts, in the order listed above, the following is noted:

(1) The foreign article was ordered in its shallow water version of 2,000 meters. The size/weight specifications of the shallow water domestic instrument are similar to those of the article. The Plessey Model 9021G has a weight in air of 51 pounds (lbs.), a housing diameter of 5.5 inches (in.), a guard frame width of 8 in., an instrument and fin height of 24 in., and an instrument and fin length of 51.8 in. The foreign article has weight in air of 56.1 lbs. for its recorder and vane assembly, an overall length of 53.9 in., an overall height 29.5 in., and a recording unit height of 20 in. with a diameter of 5 in. NOAA has compared the size/weight specifications of the domestic instrument and the foreign article and advises that the domestic instrument meets the applicant's requirements for small size and light weight. The Department concurs and finds, for the applicant's intended purposes, the two instruments equivalent with respect to feature (1).

(2) The pressure (depth) range provided by the foreign article is 0-1,000 pounds per square inch (PSI). The Plessey Model 9021G also provides a pressure depth range of 0 to 1,000 PSI.

The article provides a standard conductivity range of 0 to 70 millimho/centimeters (mmho/cm) as an option. The Plessey Model 9021G provides as a standard option 0 to 60 mmho/cm for its conductivity range with other ranges (to 70 mmho or above) available on special order.

Both the foreign article and the Plessey Model 9021G provide the capability to measure current speed and direction as standard features. The foreign article provides a temperature range of −0.34° to 34.17° Celsius (C) and the Plessey Model 9021G provides a temperature range of −2° to 35°C.

NOAA has considered these features as listed in (2) above and advises the Plessey Model 9021G satisfies this pertinent specification. In view of the above comparison of specifications, the Department concurs with NOAA's advice that the Plessey 9021G satisfies feature (2).

(3) The specifications for both the foreign article and the domestic Plessey Model 9021G show that both instruments provide an acoustic telemetering function. NOAA advises and the Department concurs that this feature of the article is also satisfied by the domestic Plessey Model 9021G.

In addition, the Department notes that the applicant, in his response to question 8, discusses the cost factor, i.e., the difference in cost between the foreign article and a domestic instrument, The Vector Averaging Current Meter (VACM), manufactured by AMF-Sealink. In accordance with § 301.2(n) of the regulations, the difference in cost between comaparable domestic instruments and the foreign article cannot be considered a pertinent feature upon which duty-free entry can be based. In any case, the Department found the Plessey 9021G, not the VACM, to be the most closely comparable domestic instrument.

Thus, based on NOAA advice, our own review of the application as well as factual information in our possession (specifications, textbooks, etc.), we find that the Plessey Model 9021G recording current meter is of equivalent scientific value to the foreign article for such purposes as the article is intended to be used.

(Catalog of Federal Domestic Assistance Program No. 11.105, Importation of Duty-Free Educational and Scientific Materials.)

RICHARD M. SEPPA,
Director, Statutory Import Programs Staff.

[FR Doc. 78-25484 Filed 9-8-78; 8:45 am]

[3510-25]

UNIVERSITY OF ROCHESTER

Decision on Application for Duty-Free Entry of Scientific Article

The following is a decision on an application for duty-free entry of a scien-

tific article pursuant to section 6(c) of the Educational, Scientific, and Cultural Materials Importation Act of 1966 (Pub. L. 89-651, 80 Stat. 897) and the regulations issued thereunder as amended (15 CFR 301).

A copy of the record pertaining to this decision is available for public review between 8:30 a.m. and 5 p.m. in room 6886C of the Department of Commerce Building, at 14th and Constitution Avenue NW., Washington, D.C. 20230.

Docket No. 78-00249. Applicant: University of Rochester, 250 East River Road, Rochester, N.Y. 14623. Article: 2 (Two) each 80 mm diameter by 12.7 mm thick disc Faraday Rotator Material Hoya Designation FR-5. Manufacturer: Hoya Corp., Japan. Intended use of article: The article is intended to be used in the construction of a high peak power 24 beam line laser system which will form the basis of a national user's facility at the university, to which scientists throughout the country may come to perform scientific experiments on the feasibility of generating energy via laser-induced thermonuclear fusion. The discs will enable the laser system to generate the quality and quantity of laser light required by the facility to investigate the potential of laser induced thermonuclear fusion for helping to solve the country's energy problems.

Comments: No comments have been received with respect to this application.

Decision: Application approved. No instrument or apparatus of equivalent scientific value to the foreign article, for such purposes as this article is intended to be used, is being manufactured in the United States.

Reasons: The foreign article provides a Verdet coefficient of −0.070 which is required for minimal laser beam scattering. The National Bureau of Standards advises in its memorandum dated August 3, 1978 that (1) the specification of the foreign article described above is pertinent to the applicant's intended purpose and (2) it knows of no domestic instrument of or apparatus of equivalent scientific value to the foreign article for the applicant's intended use.

The Department of Commerce knows of no other instrument or apparatus of equivalent scientific value to the foreign article, for such purposes as this article is intended to be used, which is being manufactured in the United States.

(Catalog of Federal Domestic Assistance Program No. 11.105, Importation of Duty-Free Educational and Scientific Materials.)

RICHARD M. SEPPA,
Director, Statutory Import Programs Staff.

[FR Doc. 78-25485 Filed 9-8-78; 8:45 am]

[3510-25]

UNIVERSITY OF ROCHESTER

Decision on Application for Duty-Free Entry of Scientific Article

The following is a decision on an application for duty-free entry of a scientific article pursuant to section 6(c) of the Educational, Scientific, and Cultural Materials Importation Act of 1966 (Pub. L. 89-651, 80 Stat. 897) and the regulations issued thereunder as amended (15 CFR 301).

A copy of the record pertaining to this decision is available for public review between 8:30 a.m. and 5 p.m. in room 6886C of the Department of Commerce Building, at 14th and Constitution Avenue, NW., Washington, D.C. 20230.

Docket No. 78-00166. Applicant: University of Rochester, 250 East River Road, Rochester, N.Y. 14623. Article: Three (3) Ultrafast Streak Cameras and Accessories. Manufacturer: Hadland Photonics Ltd., United Kingdom. Intended use of article: The article is intended to be used in the study of the feasibility of heating targets with a pulsed high power laser to produce thermonuclear reactions. The article converts the laser photons to electrons and then sweeps the accelerated electrons across a phosphor, transforming temporal to spatial variations.

Comments: No comments have been received with respect to this application.

Decision: Application approved. No instrument or apparatus of equivalent scientific value to the foreign article, for such purposes as this article is intended to be used, could have been made available to the applicant without excessive delay within the meaning of subsection 301.11(c) of the regulations at the time the foreign article was ordered (October 10, 1976).

Reasons: This application is a resubmission of Docket No. 77-00239 which was denied without prejudice to resubmission on November 4, 1977 for informational deficiencies. Excessive delivery time is described in subsection 301.11(c) of the regulations as follows:

Excessive delivery time. Duty-free entry of the article shall be considered justified without regard to whether there is being manufactured in the United States an instrument, apparatus, or accessory of equivalent scientific value for the purposes described in response to question 7 of the application form, if the delay in obtaining such domestic instrument, apparatus, or accessory (as indicated by the difference between the delivery times quoted by domestic manufacturer and foreign manufacturer) will seriously impair the accomplishment of the purposes. In determining whether the difference in delivery times is excessive, the Deputy Assistant Secretary shall take into account the relevancy of the applicant's program to other research programs with respect timing, the applicant's need to have such instrument, apparatus, or accessory available at the scheduled time for the course(s) in which the article is intended to be used, and other relevant circumstances.

The applicant issued a request for proposal RFP No. 1-2396, to Quantrad Corp., El Segundo, Calif., General Engineering and Applied Research Inc., Palo Alto, Calif. (G.E.A.R.), and the foreign manufacturer on August 25, 1976. Quantrad Corp. responded with "no bid" on August 31, 1976. G.E.A.R. responded September 24, 1976 with a bid which took no exceptions of a material nature but stated that it could not meet the specified delivery requirements in RFP No. 1-2396, i.e., first camera October 30, 1976, second Camera November 30, 1976 and third camera December 30, 1976 and offered delivery of the first camera April —, 1977, second camera May —, 1977, and third remaining camera July —, 1977. In a letter dated September 30, 1976 the foreign manufacturer represented by Marco Scientific accepted all proposals including the delivery schedules for the Streak camera stipulated in RFP No. 1-2396.

The applicant identified important projects (requiring useable data by early 1977) which would be seriously impaired by the delay in receiving GEAR's cameras. The National Bureau of Standards (NBS) advises in its memorandum dated August 8, 1978 that the difference in delivery between the domestic instrument and the foreign article is pertinent because any delay of his proposed use would seriously impair his program.

Accordingly, we find that the difference between the delivey time of the foreign article and the comparable domestic instrument to be excessive within the meaning of Subsection 301.11(c) as it would seriously impair the timely accomplishment of the applicant's purposes at the time the foreign article was ordered.

(Catalog of Federal Domestic Assistance program No. 11.105, Importation of Duty-Free Educational and Scientific Materials.)

RICHARD M. SEPPA,
Director, Statutory Import Programs Staff.

[FR Doc. 78-25486 Filed 9-8-78; 8:45 am]

[3510-25]

UNIVERSITY OF ROCHESTER

Decision on Application for Duty-Free Entry of Scientific Article

The following is a decision on an application for duty-free entry of a scientific article pursuant to section 6(c) of the Educational, Scientific, and Cultural Materials Importation Act of 1966 (Pub. L. 89-651, 80 Stat. 897) and the regulations issued thereunder as amended (15 CFR 301).

A copy of the record pertaining to this decision is available for public review between 8:30 a.m. and 5 p.m. in Room 6886C of the Department of Commerce Building, at 14th and Constitution Avenue NW., Washington, D.C. 20230.

Docket No. 78-00156. Applicant: University of Rochester, 250 East River Road, Rochester, N.Y. 14623. Article: Photochron II Image Converter Streak Camera tube with S-20 photocathode and U-V window for operations at 250 mm wavelengths. Manufacturer: Instrument Technology Ltd., United Kingdom. Intended use of article: The article is intended to be used in building a fast streak camera needed for the study of the feasibility of heating targets with a pulse high power to produce thermonuclear reactions.

Comments: No comments have been received with respect to this application.

Decision: Application approved. No instrument or apparatus of equivalent scientific value to the foreign article, for such purposes as this article is intended to be used, was being manufactured in the United States at the time the foreign article was ordered (Apr. 20, 1976).

Reasons: The foreign article provides a resolution of 5 to 10 picoseconds. The National Bureau of Standards advises in its memorandum dated August 9, 1978 that (1) the capability of the foreign article described above is pertinent to the applicant's intended purpose and (2) it knows of no domestic instrument or apparatus of equivalent scientific value to the foreign article for the applicant's intended use.

The Department of Commerce knows of no other instrument or apparatus of equivalent scientific value to the foreign article, for such purposes as this article is intended to be used, which was being manufactured in the United States at the time the foreign article was ordered.

(Catalog of Federal Domestic Assistance Program No. 11.105, Importation of Duty-Free Educational and Scientific Materials.)

RICHARD M. SEPPA,
Director, Statutory Import Programs Staff.

[FR Doc. 78-25487 Filed 9-8-78; 8:45 am]

[3510-25]

UNIVERSITY OF TENNESSEE

Withdrawal of Application for Duty-Free Entry of Scientific Article

The University of Tennessee has withdrawn Doc. No. 77-00375 an application for duty-free entry of a spectropolarimeter.

Accordingly, further administration proceedings will not be taken by the Department of Commerce with respect to this application.

(Catalog of Federal Domestic Assistance Program No. 11.105, Importation of Duty-Free Educational and Scientific Materials.)

RICHARD M. SEPPA,
Director, Statutory Import Programs Staff.

[FR Doc. 78-25489 Filed 9-8-78; 8:45 am]

[3510-25]

YALE UNIVERSITY SCHOOL OF MEDICINE

Decision on Application for Duty-Free Entry of Scientific Article

The following is a decision on an application for duty-free entry of a scientific article pursuant to section 6(c) of the Educational, Scientific, and Cultural Materials Importation Act of 1966 (Pub. L. 89-651, 80 Stat. 897) and the regulations issued thereunder, as amended (15 CFR 301).

A copy of the record pertaining to this decision is available for public review between 8:30 a.m. and 5 p.m. in Room 6886C of the Department of Commerce Building, at 14th and Constitution Avenue NW., Washington, D.C. 20230.

Docket No. 78-00224. Applicant: Yale University School of Medicine, Section of Cell Biology, 333 Cedar Street, New Haven, Conn. 06510. Article: PSC Neutral Particle Gun for Scanning Electron Microscope, model JFSM-30. Manufacturer: Zentrum Fur Elektronenmikroskopie, Austria. Intended use of article: The article is intended to be used in the field of Cell Biology for atomic metal deposit on tissues, cells, subcellular components and blood vessels. The article will also be used in training graduate students in electron microscopic preparations.

Comments: No comments have been received with respect to this application.

Decision: Application approved. No instrument or apparatus of equivalent scientific value to the foreign article, for such purposes as this article is intended to be used, is being manufactured in the United States.

Reasons: The foreign article provides plasma jet geometry which enables atomic deposition of metals on a specimen surface. The Department of Health, Education, and Welfare advises in its memorandum dated August 10, 1978, that (1) the capability of the foreign article described above is pertinent to the applicant's intended purpose, and (2) it knows of no domestic instrument or apparatus of equivalent scientific value to the foreign article for the applicant's intended use.

The Department of Commerce knows of no other instrument or apparatus of equivalent scientific value to the foreign article, for such purposes as this article is intended to be used, which is being manufactured in the United States.

(Catalog of Federal Domestic Assistance Program No. 11.105, Importation of Duty-Free Educational and Scientific Materials.)

RICHARD M. SEPPA,
Director, Statutory Import Programs Staff.

[FR Doc. 78-25488 Filed 9-8-78; 8:45 am]

[3510-25]

VETERANS ADMINISTRATION HOSPITAL, ET AL.

Consolidated Decision on Applications for Duty-Free Entry of Ultramicrotomes

The following is a consolidated decision on applications for duty-free entry of ultramicrotomes pursuant to section 6(c) of the Educational, Scientific, and Cultural Materials Importation Act of 1966 (Pub. L. 89-651, 80 Stat. 897) and the regulations issued thereunder, as amended (15 CFR 301). (See especially § 301.11(e).)

A copy of the record pertaining to each of the applications in this consolidated decision is available for public review between 8:30 a.m. and 5 p.m. in Room 6886C of the Department of Commerce Building, at 14th and Constitution Avenue NW., Washington, D.C. 20230.

Docket No. 78-00242. Applicant: VA Hospital, Cooper Drive Division, Lexington, Ky. 40507. Article: LKB 8800A Ultrotome III Ultramicrotome and Accessories. Manufacturer: LKB Produkter AB, Sweden. Intended use of article: The article is intended to be used for ultrastructural studies on normal and pathological human and animal tissues, cytochemical studies on enzyme and subcellular organelle localization in cells and tissues, and subcellular changes in cells induced by experimental treatment of animals as well as changes induced by disease in humans. The article will also be used to train students (Pathology) in the use and application of electron microscopy in diagnostic as well as research related areas. Application received by Commissioner of Customs: May 23, 1978. Advice submitted by the Department of Health, Education, and Welfare on: August 10, 1978.

Docket No. 78-00245. Applicant: University of California, San Diego, Mail Code M-013A, Department of Medicine, La Jolla, Calif. 92093. Article: LKB 8800A Ultrotome III Ultramicrotome and Accessories. Manufacturer: LKB Produkter AB, Sweden. Intended use of article: The article is intended to be used to section animal tissues which will be investigated in an attempt to understand how pulmonary

capillary morphology affects ventilation, blood flow, and gas exchange. Application received by Commissioner of Customs: May 26, 1978. Advice submitted by the Department of Health, Education, and Welfare on: August 10, 1978.

Docket No. 78-00247. Applicant: Duke University Eye Center, Durham, N.C. 27710. Article: LKB 8800A Ultrotome III Ultramicrotome and Accessories. Manufacturer: LKB Produkter AB, Sweden. Intended use of article: The article is intended to be used to produce ultra-thin sections for electron microscopic examination; primarily eye tissues. Studies underway include: Determination of the development of scar tissue in the injured eye, examination of the tissues of the eye for possible drug-induced changes and examination of tissue removed from the eye during surgery (biopsy) to determine the exact nature of the underlying disease and possibly find explanations for the development of the eye disease. Medical students and postdoctoral research fellows will be trained in the use of the article as part of their training in research. Application received by Commissioner of Customs: May 26, 1978. Advice submitted by the Department of Health, Education, and Welfare on: August 10, 1978.

Comments: No comments have been received with respect to any of the foregoing applications.

Decision: Applications approved. No instrument or apparatus of equivalent scientific value to the foreign articles, for such purposes as these articles are intended to be used, is being manufactured in the United States.

Reasons: Each of the foreign articles provides a range of cutting speeds 0.1 to 20 millimeters per second. The most closely comparable domestic instrument is the Model MT-2B ultramicrotone which is manufactured by Ivan Sorvall, Inc. (Sorvall). The Model MT-2B has a range of cutting speeds from 0.09 to 3.2 millimeters per second. The conditions for obtaining high-quality sections that are uniform in thickness, depend to a large extent on the hardness, consistency, toughness and other properties of the specimen materials, the properties of the embedding materials, and geometry of the block. In connection with a prior application (Docket No. 69-00665-33-46500), which relates to the duty-free entry of an article that is identical to those to which the foregoing applications relate, the Department of Health, Education, and Welfare (HEW) advised that "Smooth cuts are obtained when the speed of cutting (among such [other] factors as knife edge condition and angle), is adjusted to the characteristics of the material being sectioned. The range of cutting speeds and a capability for the higher cutting speeds is, therefore, a pertinent characteristic of the ultramicrotome to be used for sectioning materials that experience has shown difficult to section." In connection with another prior application (Docket No. 70-00077-33-46500) which also relates to an article that is identical to those described above, HEW advised that "ultrathin sectioning of a variety of tissues having a wide range in density, hardness, etc." requires a maximum range in cutting speed and, further, that the "production of ultrathin serial sections of specimens that have a great variation in physical properties is very difficult." Accordingly, HEW advises in its respectively cited memoranda, that cutting speeds in excess of 4 millimeters per second are pertinent to the satisfactory sectioning of the specimen materials and the relevant embedding materials that will be used by the applicants in their respective experiments.

For these reasons, we find that the Sorvall Model MT-2B ultramicrotome is not of equivalent scientific value to the foreign articles to which the foregoing applications relate, for such purposes as these articles are intended to be used.

The Department of Commerce knows of no other instrument or apparatus of equivalent scientific value to any of the foreign articles to which the foregoing applications relate, for such purposes as these articles are intended to be used, which is being manufactured in the United States.

(Catalog of Federal Domestic Assistance Program No. 11.105, Importation of Duty-Free Educational and Scientific Materials.)

RICHARD M. SEPPA,
Director, Statutory Import Programs Staff.

[FR Doc. 78-25491 Filed 9-8-78; 8:45 am]

[3510-25]

WAYNE STATE UNIVERSITY SCHOOL OF MEDICINE, ET AL.

Consolidated Decision on Applications for Duty-Free Entry of Electron Microscopes

The following is a consolidated decision on applications for duty-free entry of electron microscopes pursuant to section 6(c) of the Educational, Scientific, and Cultural Materials Importation Act of 1966 (Pub. L. 89-651, 80 Stat. 897) and the regulations issued thereunder, as amended (15 CFR 301). (See especially § 301.11(e).)

A copy of the record pertaining to each of the applications in this consolidated decision is available for public review between 8:30 a.m. and 5 p.m. in Room 6886C of the Department of Commerce Building, at 14th and Constitution Avenue NW., Washington, D.C. 20230.

Docket No. 78-00292. Applicant: Wayne State University School of Medicine, Department of Pathology, 9374 Scott Hall, 540 East Canfield, Detroit, Mich. 48201. Article: Electron Microscope, Model EM 400 HTG, and accessories. Manufacturer: Philips Electronics Instruments NVD, The Netherlands. Intended use of article: The article is intended to be used to carry out the following morphologic research programs: (1) Investigation of the relative contributions that elevated wall stress and vasoactive agents such as angiotensin II and vasopression make to the pathogenesis of the destructive microvascular lesions in severe hypertension; (2) morphometric analysis of the developing left ventricular hypertrophy in the hypertensive rat as well as longitudinal assesment of the effects of antihypertensive therapy. As a corollary of this study morphometric analysis will also be carried out on the development of arterial thickening in hypertension and its possible regression with treatment; (3) study by both transmission and scanning electron microscopy and freeze fracture, changes induced by renal hypertension or arteriosclerosis-prone intercostal offices of the aorta; (4) examination of the binding of radiolabeled angiotension to cerebral arterial endothelium and smooth muscle cells in severe renal hypertension, a time when the blood-brain barrier is breached; and (5) continuation of the work on the hearts of the genetically diabetic C57BL/KSJ-db/db mice involving investigation of the role of increased vascular permeability in the development of the cardiomyopathic process. The article will also be used for educational purposes in a course in experimental cardiovascular pathology in which students will be introduced to the area of experimental pathology and taught how the investigation of animal models of human disease can lead to a better understanding and improved therapy of diseases in man. Article ordered: May 30, 1978.

Docket No. 78-00295. Applicant: Bureau of Biologics, Food and Drug Administration, Building 29, Room 514, 8800 Rockville Pike, Bethesda, Md. 20014. Article: Electron Microscope, Model H-500-1 Side Entry Type, and accessories. Manufacturer: Hitachi, Ltd., Japan. Intended use of article: The article is intended to be used in conducting the following ultrastructural studies pertinent to control and research activities concerned with biological products including viral, rickettsial, and bacterial vaccines; allergenic products; blood and blood fractions; and diagnostic reagents: (1) The study of viral suspensions to define morphological characteristics and antigenic responses of candidate strains of viruses used for

the production of viral vaccines; (2) the study of viral vaccines to insure safety, potency, and efficacy of these vaccines e.g., the presence of extraneous viruses or bacteria in the finished product; (3) the study of thin sections or surface morphology of cells used as substrates in the production of vaccines to define growth characteristics or normal ultrastructure and for the presence of extraneous contaminating microbial agents such as bacteria, mycoplasma, yeast, and viruses including candidate oncogenic viruses; (4) study of the tissues and body fluids from humans and animal sources to discover the causative agent or agents involved in diseases and to describe the evolution of the disease and its consequences under controlled conditions in sub-human primate animal models; (5) the study of blood, blood clots, blood cells, and blood derivatives under varying conditions; (6) the study of particulate contaminants in products regulated by the FDA; (7) the study of the relationship of human diseases, sylvan hosts and ectoparasite vectors in the transmission of diseases; (8) the study of bacterial morphology, at the ultrastructural level including surface structures, e.g., fresh isolates of gonococci contain large numbers of pili; (9) the study of vaccines produced from disrupted viruses; and (10) the study of nucleic acids of viruses and bacterial, e.g., extra chromosomal DNA of bacterial (plasmids) are associated with antibiotic resistance and other characteristics which can be transferred to other strains of bacteria by various means. Article ordered: September 6, 1977.

Docket No. 78-00296. Applicant: Stanford University, 851 Welch Road, Palo Alto, Calif. 94304. Article: Electron Microscope, Model EM 400, and accessories. Manufacturer: Philips Electronic Instruments NVD, The Netherlands. Intended use of article: The article is intended to be used for studies of the following materials in ongoing research programs: (1) Cadmium sulphide, cadmium telluride, indium phosphide, and other materials for solar cell applications; (2) nickel-titanium and copper-zinc alloys which illustrate shape memory behavior; (3) dispersion strengthened nickel alloys which have creep resistance at high temperatures; (4) warm-worked cast iron which shows super-plastic properties and may be formed easily at medium temperatures; and (5) alumina and alkali metal ferrocyanides which are solid-state electrolytes useful for battery and energy-related applications. Research will be conducted to correlate the properties of materials such as the above with their structure (arrangement of atoms) and microstructure (arrangement of defects). In addition, the article will be used for educational purposes in research programs and in the following courses:

Atomic Arrangements in solids (MSE 180).
Transmission Electron Microscopy (MSE 243).
Transmission Electron Microscopy Laboratory (MSE 253).
Model Imaging Methods in Materials Science (MSE 236).

Application received by Commissioner of Customs: June 23, 1978.

Docket No. 78-00261. Applicant: Trustees of the University of Pennsylvania, 3451 Walnut Street, Franklin Building/I6, Philadelphia, Pa. 19104. Article: Electron Microscope, Model EM 10A, and accessories. Manufacturer; Carl Zeiss, West Germany. Intended use of article: The article is intended to be used to perform conventional electron microscopy, freeze fracture, and electron cytochemical studies in order to characterize muscle cell surface abnormalities and the role these abnormalities may play in the genesis of cell dysfunction in human muscular dystrophies. Particular attention will be given to alteration of intramembranous particle distribution in the freeze fracture studies and alterations in the distribution of surface glycoproteins by the use of lectin binding technique (Con A peroxidase technique) in the electron cytochemical studies. Application received by Commissioner of Customs: June 6, 1978.

Comments: No comments have been received with respect to any of the foregoing applications.

Decision: Applications approved. No instruments or apparatus of equivalent scientific value to the foreign articles for such purposes as these articles are intended to be used was being manufactured in the United States at the time the articles were ordered.

Reasons: Each foreign article to which the foregoing applications relate is a conventional transmission electron microscope (CTEM). The description of the intended research and/or educational use of each article establishes the fact that a comparable CTEM is pertinent to the purposes for which each is intended to be used. We know of no CTEM which was being manufactured in the United States either at the time of order of each article described above or at the time of receipt of application by the U.S. Customs Service.

The Department of Commerce knows of no other instrument or apparatus of equivalent scientific value to any of the foreign articles to which the foregoing applications relate, for such purposes as these articles are intended to be used, which was being manufactured in the United States either at the time of order or at the time of receipt of application by the U.S. Customs Service.

(Catalog of Federal Domestic Assistance Program No. 11.105, Importation of Duty-Free Educational and Scientific Materials.)

RICHARD M. SEPPA,
Director, Statutory Import Programs Staff.

[FR Doc. 78-25492 Filed 9-8-78; 8:45 am]

[3710-08]

DEPARTMENT OF DEFENSE

Department of the Army

BOARD OF VISITORS, U.S. MILITARY ACADEMY

Open Meeting

In accordance with section 10(a)(2) of the Federal Advisory Committee Act (Pub. L. 92-463), announcement is made of the following meeting.

Name of Committee: Board of Visitors, U.S. Military Academy.

Dates of Meeting: September 28, September 30, 1978.

Place of Meeting: West Point, N.Y.

Time: At West Point:

2100-2300, September 28, Organizational Meeting (Hotel Thayer); 0800-1700, September 29, Curriculum Review (Superintendent's Conference Room, Building 600); and
0800-1200, September 30, Selected Visits, West Point.

Proposed Agenda: Inquiry into the curriculum and other matters relating to the Military Academy that the Board decides to consider.

All proceedings are open. For further information, contact Lt. Col. Kermit M. Henninger, U.S. Military Academy, West Point, N.Y., telephone, 914-938-2785/4723.

Dated: September 1, 1978.

For the Board of Visitors.

KENNETH G. NORMAN,
Lieutenant Colonel, GS Chief, Precommissioning Program Branch, Officer Division, DMPM.

[FR Doc. 78-25468 Filed 9-8-78; 8:45 am]

[3710-08]

PRIVACY ACT OF 1974

Deletions and Amendments to Systems of Records

AGENCY: Department of the Army, DOD.

ACTION: Notice of deletions and amendments to systems of records.

SUMMARY: The Army proposes to delete two and amend three systems of records subject to the Privacy Act of 1974. Specific changes to the systems being amended are set forth below fol-

lowed by the systems published in their entirety as amended.

DATES: The systems shall be amended as proposed without further notice on October 11, 1978, unless comments are received on or before October 11, 1978, which would result in a contrary determination and require republication for further comments.

ADDRESSES: Any comments, including written data, views or arguments concerning the amendments should be addressed to the System Manager identified in the particular record system concerned.

FOR FURTHER INFORMATION CONTACT:

Mr. Cyrus H. Fraker, the Adjutant General Center (DAAG-AMR-R), Department of the Army, 1000 Independence Avenue SW., Washington, D.C. 20314, telephone 202-693-0973.

The Department of Army systems of records notices inventory subject to the Privacy Act of 1974 (5 U.S.C. 552a), Pub. L. 93-579 have been published in the FEDERAL REGISTER as follows:

FR Doc. 77-28255 (42 FR 50396), September 28, 1977.
FR Doc. 77-32975 (42 FR 59099), November 15, 1977.
FR Doc. 78-1855 (43 FR 3151), January 23, 1978.
FR Doc. 78-9239 (43 FR 14713), April 7, 1978.
FR Doc. 78-9713 (43 FR 15353), April 12, 1978.
FR Doc. 78-17146 (43 FR 26606), June 21, 1978.
FR Doc. 78-17737 (43 FR 27882), June 27, 1978.
FR Doc. 78-18880 (43 FR 29600), July 10, 1978.
FR Doc. 78-19614 (43 FR 30594), July 17, 1978.
FR Doc. 78-21772 (43 FR 34520), August 4, 1978.
FR Doc. 78-23953 (43 FR 38070), August 25, 1978.

The proposed amendments are not within the purview of the provisions of 5 U.S.C. 552a(o) of the Act which requires the submission of a new or altered system report.

Dated: September 6, 1978.

MAURICE W. ROCHE,
Director, Correspondence and Directives, Washington Headquarters Services, Department of Defense.

DELETIONS

A0612.01aDASG

System name:

Drug Abuse Testing (Random Selection) System (42 FR 50509) September 28, 1977.

Reason:

Random urinalysis for drug abuse detection has been terminated and compiled data has been purged.

A0708.08cDASG

System name:

Career Management Historical Data (42 FR 50535) September 28, 1977.

Reason:

Records are no longer maintained due to the limited value of the historical data.

AMENDMENTS

A0607.01bDAIG

System name:

Accident and Incident Case Files; Army Safety Management Information System (42 FR 50507) September 28, 1977.

Changes:

Categories of records in the system:

After "information relating to Army accidents," insert "including Aviator Mishap Data File consisting of Preliminary Reports of Aviation Mishaps;".

Authority for maintenance of the system:

At the beginning of the entry, preceding "Public Law 91-596", insert "Title 5 U.S.C., Section 7902,". Change "Public Law 91-596" to read "Pub. L. 91-596".

Routine uses of records maintained in the system, including categories of users and the purposes of such uses:

After first sentence, delete remainder of entry and substitute the following: "Users are Department of the Army or National Guard personnel (military or civilian) tasked with analyzing and improving the Army or National Guard Safety Programs; and for determining qualification of Army or National Guard aviators for selected programs. Various Department of Defense agencies, the Department of Labor, Federal Aviation Agency, other Federal, State, and local agencies, and applicable civilian organizations, such as the National Safety Council; National Transportation Safety Board, are furnished categories of data for use in a combined effort of accident prevention."

Retrievability:

Add third sentence as follows: "Aviator accident mishap data is retrieved by individual's last name and/or SSN."

Retention and disposal:

After "USAAAVS: Permanent. Retired to Washington National Records Center on discontinuance.", add "Aviator Mishap Data File: Destroyed after 20 years."

System manager(s) and address:

Delete "and Auditor General".

Record access procedures:

In third paragraph, after "provide acceptable identification; i.e.," insert "military ID,".

Record source categories:

After "marine casualty reports", delete "." and add: ", and preliminary report of Aviation Mishap."

A0725.01dDAAG

System name:

Personal affairs Army Community Service Assistant Files (42 FR 50562) September 28, 1977.

Changes:

Categories of individuals covered by the system:

Add: "Army Community Service (ACS) Program volunteers."

Categories of records in the system:

After "and similar services", delete "." and insert "; ACS volunteer service records." Delete last sentence in parentheses and insert: "(See DA Form 3063-R, Army Regulations (AR) 608-1 for detailed services provided.)"

Routine uses of records maintained in the system, including categories of users and the purposes of such uses:

After "and personal problems of individuals", delete "." and add "; to develop and coordinate ACS volunteer services and determine volunteer qualifications for task assignments and awards."

A0307.14aDAPE

System name:

Department of the Army Civilian Personnel Systems (42 FR 50570) September 28, 1977.

Changes:

Categories of individuals covered by the system:

After "and foreign nationals", delete "." and add "; military personnel are included in the incentive awards and training programs."

Categories of records in the system:

Add: "Records are maintained for military personnel participating in the DOD Incentive Awards Program and training programs sponsored by operating civilian personnel offices."

Authority for maintenance of the system:

Add: "; Title 10 U.S.C., Section 1124."

A0607.01bDAIG

System name:

607.01 Accident and Incident Case Files; Army Safety Management Information System.

System location:

Primary System: U.S. Army Agency for Aviation Safety (USAAAVS), ATTN: IGAR-DP, Ft. Rucker, Ala. 36362.

Decentralized Segments: Safety Offices at all levels of command including Department, Major Command, and installation level.

Categories of individuals covered by the system:

Documents describing Army accidents maintained with personnel identification when the following categories of persons are involved in Army accidents: Active Army military personnel; Army civilian employees; Army Reserve; Army Reserve Officers Training Corps under Army supervision; Army National Guard; Army contractor employees working on an Army installation; non-U.S. citizen Army employees, both direct and indirect hire; other persons not engaged in normal activities of an Army installation or activity, not specifically defined as a separate category, such as persons paid from nonappropriated funds; visitors to an installation, local residents, personnel of other agencies and services, foreign military students, dependents, and Government and contractor employees injured on post in activities outside their employment duties; individuals off-post involved in accidents incident to Army operation.

Categories of records in the system:

File contains all pertinent and relevant information relating to Army accidents, including Aviator Mishap Data File consisting of Preliminary Reports of Aviation Mishaps; but excludes aircraft accident reports.

Authority for maintenance of the system:

Title 5 U.S.C., section 7902; Pub. L. 91-596, section 19, Occupational Safety and Health Act of 1970; and section 2, Executive Order 11807, Occupational Safety and Health Program for Federal Employees.

Routine uses of records maintained in the system, including categories of users and the purposes of such uses:

Information is gathered and maintained solely for accident prevention purposes. Users are Department of the Army or National Guard personnel (military or civilian) tasked with analyzing and improving the Army or National Guard Safety Programs; and for determining qualification of Army or National Guard aviator for selected programs. Various Department of Defense agencies, the Department of Labor, Federal Aviation Agency, other Federal, State, and local agencies, and applicable civilian organizations, such as the National Safety Council; National Transportation Safety Board, are furnished categories of data for use in a combined effort of accident prevention.

Policies and practices for storing, retrieving, accessing, retaining, and disposing of records in the system:

Storage:

Paper records, computer magnetic tapes, magnetic disks and microfilm.

Retrievability:

By date, location, and type of accident involved. In rare instances it may be retrieved by individual's last name and social security number (SSN) in addition to other necessary information. Aviator accident mishap data is retrieved by individual's last name and/or SSN.

Safeguards:

Information is coded, located in locked rooms, accessed by authorized personnel only. Only Major Army Command Safety Data Managers and the SYSMANAGER are allowed access to the records.

Retention and disposal:

Office performing Army-wide staff responsibility for safety function and reviewing offices at lower echelons: Destroyed after 5 years.

USAAAVS: Permanent. Retired to Washington National Records Center on discontinuance. Aviator Mishap Data File: Destroyed after 20 years.

Offices initiating reports and investigations: Destroyed after 2 years or on discontinuance, whichever is first.

System manager(s) and address:

Army Director of Safety, Headquarters, Department of the Army (HQDA), Office of the Inspector General, Washington, D.C. 20310.

Notification procedure:

Information may be obtained from: HQDA (DAIG-SD), Room 1D-713, The Pentagon, Washington, D.C. 20310, telephone: area code 202-695-7291.

Record access procedures:

Written requests for information should contain full name, SSN, when and where accident occurred, and type of accident.

Individuals should contact Commander, U.S. Army Agency for Aviation Safety, Fort Rucker, Ala. 36362.

For personal visits, the individual should be able to provide acceptable identification; i.e., military ID, driver's license, employment ID, or other document which displays photograph/name/SSN/address/or physical characteristics to adequately identify the visitor.

Contesting record procedures:

The Army's rules for access to records and for contesting contents and appealing initial determinations may be obtained from the SYSMANAGER.

Record source categories:

Documents originating at various Army command levels, which include reports of accident, injury, fire, morbidity, military police traffic accident investigations, casualty, individual sick slips, serious incident reports, operator's reports of motor vehicle accidents, marine casualty reports, and Preliminary Report of Aviation Mishap.

Systems exempt from certain provisions of the act:

None.

A0725.01dDAAG

System name:

725.01 Personal Affairs Army Community Service Assistance Files.

System location:

Army Community Service (ACS) Centers at installations Army-wide. Official mailing addresses are in the Appendix.

Categories of individuals covered by the system:

Any of the following who receive ASC assistance: active duty and retired military personnel and their dependents; members of components on active duty for training and their dependents; Department of the Army (DA) civilians overseas and in continental United States where local civilian resources are not available; widows, widowers and other next-of-kin, regardless of dependency status, of military personnel who were on active duty or retired at time of decease; next-of-kin of prisoner of war/missing in action of all Armed Services; and other personnel designated by the Commander.

Army Community Service (ACS) Program volunteers.

Categories of records in the system:

Documents accumulated by ACS Centers include, but are not limited to, contact summaries, progress notes, referral forms, problem statements used

to provide referral and follow-up, financial aid, exceptional children assistance, child advocacy assistance, relocation services, emergency assistance, counseling, community life services, general assistance, and similar services; ACS volunteer service records. (See DA Form 3063-R, Army Regulation (AR) 608-1 for detailed services provided.)

Authority for maintenance of the system:

Title 10 U.S.C., section 3012.

Routine uses of records maintained in the system, including categories of users and the purposes of such uses:

ACS Centers: To obtain information necessary for providing the assistance or service required; to coordinate and facilitate other agency services; to facilitate referrals and complete follow-up actions; to maintain a record of services provided for purposes of analysis and evaluation of ACS Center program; to maintain record of household items loaned; to communicate between losing and gaining ACS activities concerning unresolved, continuing, or anticipated personal problems of individuals; to develop and coordinate ACS volunteer services and determine volunteer qualifications for task assignments and awards.

Policies and practices for storing, retrieving, accessing, retaining, and disposing of records in the system:

Storage:

Paper records in file folders.

Retrievability:

Filed alphabetically by last name of individual.

Safeguards:

Records maintained in ACS files accessible only to ACS Officer and authorized ACS staff.

Retention and disposal:

Destroyed after 2 years, or on discontinuance, whichever comes first; may be transferred from one ACS Center to another upon permanent change of station of client.

System manager(s) and address:

The Adjutant General, Headquarters, Department of the Army, The Pentagon, Washington, D.C. 20310.

Installation ACS Officers.

Notification procedure:

Information may be obtained from installation ACS Officers. Requesting individual must provide full name, rank, social security number, and military status, together with current military or dependent identification card.

Record access procedures:

Requests for assistance should be addressed to ACS Officers at installations having ACS Centers.

Contesting record procedures:

The Army's rules for obtaining access to records and for contesting contents and appealing initial determinations are contained in AR 340-21.

Record source categories:

ACS Officers and individuals receiving assistance.

Systems exempt from certain provisions of the act:

None.

A0807.14aDAPE

System name:

807.14 Department of the Army Civilian Personnel Systems.

System location:

Primary System: Civilian Personnel Information System I/Civilian Career Management File, United States (U.S.) Army Military Personnel Center, 200 Stovall Street, Alexandria, Va. 22332.

Derivative Systems are maintained at commands, installations and activities dependent on the type of system maintained. Command-wide systems are the Civilian Personnel Accounting System of the U.S. Army Military District of Washington, the U.S. Army Corps of Engineers Management Information System Files for Personnel Administration, and the Personnel Management Information System of U.S. Army Materiel Command. Official Mailing addresses are in the organizational directory in the Appendix.

Categories of individuals covered by the system:

All U.S. citizen appropriated fund employees and in some instances nonappropriated fund employees, dependents, and foreign nationals; military personnel are included in the incentive awards and training programs.

Categories of records in the system:

Records maintained are afforded broad and general coverage by the U.S. Civil Service Commission (CSC) system notices for application to CSC systems of records which are temporarily in custody of the Department of the Army (DA). To support personnel administration at DA Headquarters, commands, installations, and activities, civilian personnel systems vary in informational capacity according to respective requirements and contain several or all of the following records: academic discipline; career program; citizenship; command; date (year) degree attained; date of birth; educational level; academic; effective date of action; employee tenure; Federal Employees Group Life Insurance; functional classification; function designator; General Services Administration location; grade or level; minority group designator; name of employee; nature of action; occupational series; pay basis; pay plan; pay rate determinant; physical handicap; position occupied; position supervisory; position tenure; retirement; retired military; salary; service computation date; sex; social security number (SSN); special program identifier; step or rate; submitting office number (SON); training, date of completion; training, non-duty hours; training, on-duty hours; training, principal purpose of; training, special interest program; training, source; training, type; type of appointment; unit identification code (UIC); veterans preference; work schedule; organizational and position data; retention data; adverse action data; Fair Labor Standards Act coverage; cost of living allowances; transportation entitlements; cost codes; leave category; salary history; wage area; position sensitivity; security investigation data; security clearance and access data; performance award; suggestion award; cash award; reemployment rights; training agreement; reserve status; vessel operations qualification; Government driver's license; food handler's permit; intern recruitment and training data; career management data including performance/potential ratings; employee evaluation; education; experience; qualifications; achievements; training; geographic availability; health; dependent data; careerist comments; and similar information; overseas sponsor information; state address; home address leave data; foreign language code. Records are maintained for military personnel participating in the DOD Incentive Awards Program and training programs sponsored by operating civilian personnel offices.

Authority for maintenance of the system:

Title 5 U.S.C., section 301; Title 10 U.S.C., section 1124.

Routine uses of records maintained in the system, including categories of users and the purposes of such uses:

The CSC system notices applying to CSC systems of records which are in custody of the DA provide broad and general coverage of routine uses of DA civilian personnel systems. Information for which these records are used or may be used by Headquarters, Department of the Army (HQDA) commands, installations, and activities include reports and statistical analysis of the civilian workforce strength trends and composition in support of established manpower and budget pro-

grams and procedures, provide employment verification, provide data in support of Equal Employment Opportunity program requirements, provide locator and emergency notification data pertaining to civilian employees, provide data for the Central Personnel Data File, provide interface with other automated systems, provide information in response to union requests, provide data for retention purposes, identification of training requirements, strength accounting to insure employment within manpower ceilings, grade control, salary data for current and projected fiscal guidance, personnel data for current and projected staffing requirements, provide certain information releasable under the Freedom of Information Act, security clearance and access information, employee data for retirement processing, provide data for individual personnel action forms, suspense dates for within grade increases, length of service awards, performance ratings, pay adjustments and tenure group, prepare labor cost distribution reports, analysis of leave usage, investigation of complaints, grievances and appeals, response to request from courts and regulatory bodies, provide incentive awards information, used in providing qualified candidates to fill position vacancies, evaluation of special employment programs, contingency planning for civilian employees and dependents, counseling employees on career development and planning future trading, plan dependent services in overseas areas, used to advise and counsel employees for development, identify training needs, record historical training data, produce average grade and position control data.

Policies and practices for storing, retrieving, accessing, retaining, and disposing of records in the system:

Storage:

Records are maintained on magnetic tapes, drum, disk, punched cards, microfilm/fiche, or hard copy.

Records are retrieved by SSN and name, or by 1 or a combination of data elements contained in DA civilian personnel systems.

Safeguards:

The computer facilities and terminals are located in restricted areas accessible only to authorized personnel who are properly screened, cleared, and trained. Manual records, microfilm/fiche, and computer printouts are stored in locked rooms, locked cabinets on military installations or buildings secured by guards.

Retention and disposal.

Records are permanent through employee tenure and maintained after separation, transfer, or retirement. Records are maintained for various periods according to category.

System manager(s) and address:

HQDA, Deputy Chief of Staff for Personnel, Washington, DC 20310.

Notification procedure:

Upon presentation of proper identification, information may be obtained from servicing civilian personnel office. Individual must provide full name and SSN.

Record access procedures:

Requests from individuals should be addressed to the servicing civilian personnel office.

Written requests should contain as a minimum, the individual employee's name and SSN.

For personal visits, individual must provide acceptable identification, e.g., driver's license, military or civilian identification card.

No identification is required if the individual has previously given written consent for release to the general public.

Contesting record procedures:

The Army's rules for contesting contents and appealing initial determinations may be obtained from the SYS-MANAGER.

Record source categories:

Information is obtained directly from the individual concerned or from official personnel files.

Systems exempt from certain provisions of the act:

None.

[FR Doc. 78-25562 Filed 9-8-78; 8:45 am]

[3810-70]

Office of the Secretary

DEFENSE SCIENCE BOARD TASK FORCE ON STRATEGIC PLANNING EXPERIMENT IN THE MARITIME BALANCE AREA

Advisory Committee Meeting

The Defense Science Board Task Force on Strategic Planning Experiment in the Maritime Balance Area will meet in closed session on September 29, 1978, in the Pentagon, Arlington, Va.

The mission of the Defense Science Board is to advise the Secretary of Defense and the Under Secretary of Defense for Research and Engineering on scientific and technical matters as they affect the perceived needs of the Department of Defense.

A meeting of the Task Force on Strategic Planning Experiment in the Maritime Balance Area has been scheduled for September 29, 1978, to discuss the conduct of an experiment in applying business policy/strategic planning concepts to the development of a competitive strategy for the Maritime Balance Area. The Task Force and its associated Navy Study Group will focus on the long-term competition between the United States and the Soviet Union in the maritime area.

In accordance with section 10(d) of appendix I, title 5, United States Code, it has been determined that this Defense Science Board Task Force meeting concerns matters listed in section 552b(c) of title 5, of the United States Code, specifically subparagraph (1) thereof, and that accordingly, this meeting will be closed to the public.

Dated: September 6, 1978.

MAURICE W. ROCHE,
Director, Correspondence and Directives.

[FR Doc. 78-25471 Filed 9-8-78; 8:45 am]

[3128-01]

DEPARTMENT OF ENERGY

Economic Regulatory Administration

[ERA Docket No. 78-004-LNG]

COLUMBIA LNG CORP. AND CONSOLIDATED SYSTEM LNG CO.

Order Granting Intervention

In response to the notice of application to import liquefied natural gas into the United States from Iran, relating to the application filed jointly by Columbia LNG Corp. (Columbia) and Consolidated System LNG Co. (Consolidated), ERA Doc. No. 78-004-LNG (the application), (43 FR 31962, April 18, 1978), 23 petitions to intervene have been filed with the Economic Regulatory Administration (ERA). The notice of application set August 10, 1978, as the last day for filing petitions to intervene.

Timely petitions to intervene were filed by:

Algonquin Gas Transmission Co., and Algonquin LNG, Inc.
Columbia Gas of Kentucky, Inc.
Columbia Gas of Maryland, Inc.
Columbia Gas of New York, Inc.
Columbia Gas of Ohio, Inc.
Columbia Gas of Pennsylvania, Inc.
Columbia Gas of Virginia, Inc.
Columbia Gas of West Virginia, Inc.
El Paso Algeria Corp.
General Motors Corp.
The State of Maryland.
Attorney General of Ohio on behalf of the State of Ohio.
Pennsylvania Gas & Water Co.
Public Service Commission of the State of New York.
Public Service Electric & Gas Co.
Rochester Gas & Electric Corp.
Tennessee Gas Pipeline Co.
UGI Corp.
Washington Gas Light Co.

Late petitions to intervene were filed by:

CNG Transportation Co.
New York State Electric & Gas Corp.
Phillips Petroleum Co.
Southern Energy Company & Southern Natural Gas Co.

A hearing in this docket has been requested by the State of Maryland and the attorney general of Ohio.

ERA has concluded that it would not be consistent with a thorough review of the application to deny the five petitions filed out of time, nor would it delay the proceedings to grant such petitions. In addition, ERA concludes that the petitions filed have provided adequate reason to grant each petitioner status as an intervener. Accordingly, ERA grants intervention to each of the petitioners listed above, subject to the rules of practice and procedure of the Federal Power Commission (18 CFR 1.8) as adopted by ERA, and as may hereafter be modified by ERA. *Provided*, That participation of each intervener shall be limited to matters affecting asserted rights and interests as specifically set forth in its petition to intervene: *And provided further*, That admission of such interveners shall not be construed as recognition by the ERA that they might be aggrieved by any order of the ERA entered in this proceeding.

Issued in Washington, D.C., on September 5, 1978.

DORIS J. DEWTON,
Deputy Assistant Administrator, Fuels Regulation, Economic Regulatory Administration.

[FR Doc. 78-25350 Filed 9-8-78; 8:45 am]

[6740-02]

Federal Energy Regulatory Commission

[Docket No. ER76-530]

ARIZONA PUBLIC SERVICE CO.

Extension of Time

AUGUST 29, 1978.

On August 18, 1978, Arizona Public Service Co. (APS) filed a motion to extend the time for filing revised rates in compliance with the Commission's order of August 1, 1978, in this proceeding. APS states that it intends to file an application for rehearing of the order and asks for an extension of 30 days beyond the Commission's order on rehearing. On August 24, 1978, the irrigation district customers filed a response stating that they have no objection to the extension as long as it does not affect the effective date of the order. The granting of this extension does not change the effective date of August 1, 1978.

Upon consideration, notice is hereby given that an extension is granted to and including November 1, 1978, within which APS shall comply with ordering paragraph (D) of the August 1, 1978, order.

LOIS D. CASHELL,
Acting Secretary.

[FR Doc. 78-25365 Filed 9-10-78; 8:45 am]

[6740-02]

[Docket No. ER78-563]

CENTRAL VERMONT PUBLIC SERVICE CORP.

Proposed Tariff Change

AUGUST 29, 1978.

Take notice that Central Vermont Public Service Corp. (Central Vermont) on August 21, 1978, tendered for filing proposed changes in its FPC Electric Service Rate No. 93. Central Vermont states that the proposed changes would increase revenues from jurisdictional sales and service by $1,304 for the 12-month period ending October 31, 1978.

Central Vermont further states that the change is proposed in accordance with the provisions of article VII, and amendments thereto, of the company's transmission service agreement with the Lyndonville Electric Department, which provides that charges will be updated annually to incorporate the company's cost experience for the preceding calendar year.

Central Vermont proposes an effective date of November 1, 1978.

Copies of the filing were served upon the Lyndonville Electric Department and the Vermont Public Service Board, according to Central Vermont.

Any person desiring to be heard or to protest said application shall file a petition to intervene or protest with the Federal Energy Regulatory Commission, 825 North Capitol Street NE., Washington, D.C. 20426, in accordance with §§ 1.8, 1.10 of the Commission's rules of practice and procedure (18 CFR 1.8, 1.10). All such petitions or protests should be filed on or before September 25, 1978. Protests will be considered by the Commission in determing the appropriate action to be taken, but will not serve to make protestants parties to the proceeding. Any person wishing to become a party must file a petition to intervene. Copies of this application are on file with the Commission and are available for public inspection.

LOIS D. CASHELL,
Acting Secretary.

[FR Doc. 78-25360 Filed 9-8-78; 8:45 am]

[6740-02]

[Docket No. ER78-564]

CENTRAL VERMONT PUBLIC SERVICE CORP.

Proposed Tariff Change

AUGUST 29, 1978.

Take notice that Central Vermont Public Service Corp. (Central Vermont) on August 21, 1978, tendered for filing a proposed change in its FPC Electric Service No. 92. Central Vermont states that the proposed change would not change revenues from jurisdictional sales for the 12-month period ending October 31, 1978. Central Vermont further states that no transactions have occurred under the contract during the preceding 12 months, and none are contemplated during the succeeding 12 months.

Central Vermont indicates that the change is proposed in accordance with article V of the company's agreement with the Lyndonville Electric Department, which provides that charges under the agreement will be updated annually to incorporate the company's purchased power cost experience for the preceding 12 months ending April and the company's capacity cost associated with company-owned generating facilities for the preceding calendar year.

Central Vermont proposes an effective date of November 1, 1978.

Any person desiring to be heard or to protest said application shall file a petition to intervene or protest with the Federal Energy Regulatory Commission, 825 North Capitol Street NE., Washington, D.C. 20426, in accordance with §§ 1.8 and 1.10 of the Commission's rules of practice and procedure (18 CFR 1.8, 1.10). All such petitions or protests should be filed on or before September 25, 1978. Protests will be considered by the Commission in determining the appropriate action to be taken, but will not serve to make protestants parties to the proceeding. Any person wishing to become a party must file a petition to intervene. Copies of this application are on file with the Commission and are available for public inspection.

LOIS D. CASHELL,
Acting Secretary.

[FR Doc. 78-25367 Filed 9-8-78; 8:45 am]

[6740-02]

[Docket No. CP78-488]

EL PASO NATURAL GAS CO.

Application

AUGUST 29, 1978.

Take notice that on August 18, 1978, El Paso Natural Gas Co. (Applicant), P.O. Box 1492, El Paso, Tex. 79978, filed in docket No. CP78-488 an appli-

cation pursuant to section 7(c) of the Natural Gas Act for a certificate of public convenience and necessity authorizing certain arrangements with its California customers during the period November 1, 1978 through April 30, 1979, for the purpose of diverting gas from its California customers to Applicant's east-of-California (EOC) customers' priority 1 and 2 service requirements, all as more fully set forth in the application on file with the Commission and open to public inspection.

Specifically, Applicant states that it has entered into a letter agreement with Pacific Gas & Electric Co. (PGandE) dated July 25, 1978, and a letter agreement with Southern California Gas Co. (SoCal) dated August 1, 1978, which provide for arrangements designed to allow Applicant to fulfill its EOC customers' peak day priority 1 and 2 requirements during the 1978-79 heating season. Such arrangements, hereinafter referred to as the "California back-off" arrangements, will permit Applicant to divert from its otherwise scheduled deliveries to PGandE and/or to SoCal during the 1978-79 heating season, such quantities of gas, not to exceed 100,000 Mcf daily from each company, as are required for use in protecting EOC priority 1 and 2 service. Such diversions from otherwise scheduled deliveries to PGandE and/or SoCal would only be imposed on those peak days during the 1978-79 heating season when the quantities of gas otherwise available for service to Applicant's EOC customers, as augmented by maxumum withdrawals from Applicant's Rhodes Reservoir and Clay Basin load-equation projects, are not alone sufficient to protect fully service to the EOC customers' priority 1 and 2 requirements. Additionally, diversions of gas from otherwise scheduled deliveries to either PGandE or SoCal under the back-off arrangements can only made during periods when, in that California customers's sole judgment, no impairment will result in: (i) Its ability to meet the requirements of service, including storage operations, to its high priority customers and those of its wholesale customers; (ii) its ability to maintain service levels to its remaining customers as required by the Public Utilities Commission of the State of California directions; or (iii) its ability to meet its obligations to the other California customer of Applicant pursuant to that certain contract between them dated August 31, 1965, as amended or superseded. Diversions of gas from otherwise scheduled deliveries to either California customer are not to exceed a cumulative net total of 1,500,000 Mcf at any one time.

Applicant further states that the inkind restoration (payback) to PGandE and/or SoCal by El Paso of volumes of gas diverted from either or both of those customers under the back-off arrangements will be accomplished, as soon as operationally possible after the diversions to which the payback relates, through the withdrawal from Applicant's Rhodes Reservoir storage facility, and delivery to the California customer or customers, of volumes of gas equal to the total accumulated volumes by which deliveries to that customer or those customers were reduced. Each of the California customers would pay Applicant for the payback voumes which that customer receives at a unit rate equivalent to the rate applicable to Applicant's deliveries under rate schedule G of Applicant's FERC gas tariff, original volume No. 1, or superseding rate schedule or tariff, which rate was in effect at the time of the reduction in deliveries to which the payback volumes relate.

In consideration of the respective participation of PGandE and SoCal in such back-off arrangements, Applicant would reduce, as appropriate, its monthly billings to each of those customers by an amount equal to $0.71 per Mcf (in the case of PGandE) and $0.68 per Mcf (in the case of SoCal), multiplied by the volumes in Mcf actually diverted from otherwise scheduled deliveries to that California customer during the preceeding month.

Any person desiring to be heard or to make any protest with reference to said application should, on or before September 20, 1978, file with the Federal Energy Regulatory Commission, Washington, D.C. 20426, a petition to intervene or a protest in accordance with the requirements of the Commission's rules of practice and procedure (18 CFR 1.8 or 1.10) and the regulations under the Natural Gas Act (18 CFR 157.10). All protests filed with the Commission will be considered by it in determining the appropriate action to be taken but will not serve to make the protestants parties to the proceeding. Any person wishing to become a party to a proceeding or to participate as a party in any hearing therein must file a petition to intervene in accordance with the Commission's rules.

Take further notice that, pursuant to the authority contained in and subject to the jursidiction conferred upon the Federal Energy Regulatory Commission by sections 7 and 15 of the Natural Gas Act and the Commission's rules of practice and procedure, a hearing will be held without further notice before the Commission on this application if no petition to intervene is filed within the time required herein, if the Commission on its own review of the matter finds that a grant of the authorization is required by the public convenience and necessity. If a petition for leave to intervene is timely filed, or if the Commission on its own motion believes that a formal hearing is required, further notice of such hearing will be duly given.

Under the procedure herein provided for, unless otherwise advised, it will be unnecessary to Applicant to appear or be represented at the hearing.

LOIS D. CASHELL
Acting Secretary.

[FR Doc. 78-25368 Filed 9-8-78; 8:45 am]

[6740-02]

[Docket No. ID-1855]

GERALD E. ANDERSON

Application

AUGUST 30, 1978.

Take notice that on July 26, 1978, Gerald E. Anderson, (Applicant), filed an application pursuant to section 305(b) of the Federal Power Act to hold the following positions:

Director, Vermont Yankee Nuclear Power Co., public utility.
Director, Maine Yankee Atomic Power Co., public utility.
Director, Connecticut Yankee Atomic Power Co., public utility.
Director, Yankee Atomic Electric Co., public utility.

Any person desiring to be heard or to protest said application should file a petition to intervene or protest with the Federal Energy Regulatory Commission, 825 North Capitol Street NE., Washington, D.C. 20426, in accordance with §§ 1.8 and 1.10 of the Commission's rules of practice and procedure (18 CFR 1.8, 1.10). All such petitions or protests should be filed on or before September 15, 1978. Protests will be considered by the Commission in determining the appropriate action to be taken, but will not serve to make protestants parties to the proceeding. Any person wishing to become a party must file a petition to intervene. Copies of this application are on file with the Commission and are available for public inspection.

KENNETH F. PLUMB,
Secretary.

[FR Doc. 78-25369 Filed 9-8-78; 8:45 am]

[6740-02]

[Docket No. CP75-37]

MOUNTAIN FUEL SUPPLY CO.

Petition To Amend

AUGUST 29, 1978.

Take notice that on August 18, 1978, Mountain Fuel Supply Co. (Petitioner), 180 East First South Street, Salt Lake City, Utah 84139, filed in docket

No. CP 75-37 a petition to amend the order of January 26, 1977, issued in the instant docket (57 FPC)[1] pursuant to section 7(c) of the Natural Gas Act so as to authorize the construction and operation of two additional exchange delivery points between the facilities of Petitioner and Colorado Interstate Gas Co. (CIG), and to construct and operate certain other facilities, all as more fully set forth in the application on file with the Commission and open to public inspection.

It is indicated that pursuant to the order of January 26, 1977, Petitioner was granted the continued exemption of its Uintah Basin pipeline and was authorized to exchange, sell, and purchase natural gas by and between CIG and Petitioner. Petitioner states that its successful development of additional gas supply has created a situation wherein it can no longer exchange balanced volumes with CIG using only the presently authorized procedures. Consequently, Petitioner and CIG have entered into an amending gas purchase and exchange agreement dated June 29, 1978, which agreement provides for the establishment of two additional delivery points in Sweetwater County, Colo., it is stated. The first additional exchange point which Applicant proposes to establish in Sweetwater County has been designated as the Green River facilities. It is stated that at this location, existing interconnecting facilities would be utilized immediately upon receipt of certificate authorization to redeliver gas to CIG during the periods when Petitioner has seasonally idle pipeline and compressor capacity.

Petitioner states that it tends to use this delivery point only temporarily until the facilities for the second exchange point are installed and operating, and only for emergency purpose thereafter. Petitioner further states that the usefulness of this exchange point is limited due to pipeline pressure differences, remoteness of compression to effectuate gas flow from Petitioner's lines to Petitioner, and the seasonal dependency of capacity. The second additional exchange point in Sweetwater County is near Petitioner's Nightingale compressor station and is designated the Kanda Exchange, it is said. Petitioner proposes to construct approximately 12,000 feet of 12-inch pipe which would connect its facilities to those of CIG. In addition to the pipeline facilities, Petitioner proposes to install initial compression facilities consisting of three 1,100 horsepower compressors. Petitioner states that these facilities would enable it to deliver approximately 40,000 Mcf into CIG's system using two of the compressors with the third compressor available on a standby basis. Petitioner estimates the total cost of the proposed facilities at approximately $2,236,471, it is stated.

Petitioner indicates that it would charge CIG a compression charge of 5 cents per Mcf for all gas compressed and delivered through these two new delivery points for Petitioner's account. Either party to the agreement has the right to request an adjustment of the compression charge to reflect changes in costs, it is said. It is indicated that exchange gas volumes are to be thermally balanced, and to the extent possible, any out-of-balance condition would be made up during the following month.

Any person desiring to be heard or to make any protest with reference to said petition to amend should on or before September 20, 1978, file with the Federal Energy Regulatory Commission, Washington, D.C. 20426, a petition to intervene or a protest in accordance with the requirements of the Commission's rules of practice and procedure (18 CFR 1.8 or 1.10) and the regulations under the Natural Gas Act (18 CFR 157.10). All protests filed with the Commission will be considered by it in determining the appropriate action to be taken but will not serve to make the protestants parties to the proceeding. Any person wishing to become a party to a proceeding or to participate as a party in any hearing therein must file a petition to intervene in accordance with the Commission's rules.

LOIS D. CASHELL,
Acting Secretary.

[FR Doc. 78-25370 Filed 9-8-78; 8:45 am]

[1] This proceeding was commenced before the FPC. By joint regulation of Oct. 1, 1977 (10 CFR 1000.1), it was transferred to the Commission.

[6740-02]

[Docket Nos. RP71-107 (Phase II) and RP72-127]

NORTHERN NATURAL GAS CO.

Extension of Time

AUGUST 29, 1978.

On August 15, 1978, Northern Natural Gas Co. filed a motion for a further extension of time to comply with ordering paragraph (B) of the Commission's order issued June 22, 1978, in this proceeding. An extension had previously been granted by notice issued July 26, 1978. Northern Natural states that no party to this proceeding objects to the request.

Upon consideration, notice is hereby given that an extension is granted to and including September 20, 1978, within which Northern Natural shall comply with ordering paragraph (B) of the June 22, 1978 order.

LOIS D. CASHELL,
Acting Secretary.

[FR Doc. 78-25371 Filed 9-8-78; 8:45 am]

[6740-02]

[Docket No. ER78-562]

PUBLIC SERVICE CO. OF OKLAHOMA

Cancellation

AUGUST 29, 1978.

Take note that Public Service Co. of Oklahoma (PSCO) on August 21, 1978, tendered for filing a notice of cancellation of a letter agreement dated May 19, 1978, which is a supplement to rate schedule FERC No. 118.

PSCO states that said agreement will expire on its own terms on October 7, 1978.

According to PSCO copies of this filing have been sent to Arkansas Power & Light Co., Southwestern Electric Power Co., and the Oklahoma Corporation Commission.

Any person desiring to be heard or to protest said filing should file a petition to intervene or protest with the Federal Energy Regulatory Commission, 825 North Capitol Street NE., Washington, D.C. 20426, in accordance with sections 1.8 and 1.10 of the Commission's rules of practice and procedure (18 CFR 1.8, 1.10). All such petitions or protests should be filed on or before September 25, 1978. Protests will be considered by the Commission in determining the appropriate action to be taken, but will not serve to make protestants parties to the proceeding. Any person wishing to become a party must file a petition to intervene. Copies of this filing are on file with the Commission and are available for public inspection

LOIS D. CASHELL,
Acting Secretary.

[FR Doc. 78-25372 Filed 9-8-78; 8:45 am]

[6740-02]

[Docket No. CP77-411]

SOUTHWEST GAS CORP.

Petition To Amend

AUGUST 29, 1978.

Take notice that on August 10, 1978, Southwest Gas Corp. (Petitioner), P.O. Box 15015, Las Vegas, Nev. 89114, filed in docket No. CP77-411, a petition to amend the order of August 29, 1977, issued in the instant docket (57 FPC)[1] pursuant to section 7(c) of

[1] This proceeding was commenced before the FPC. By joint regulation of Oct. 1, 1977 (10 CFR 1000.1), it was transferred to the Commission.

the Natural Gas Act so as to authorize Petitioner to sell to El Paso Natural Gas Co. (El Paso) from time to time volumes of natural gas which it may have in excess of its requirements on any day and the transportation of which to Southwest has been authorized by the Commission, all as more fully set forth in the petition on file with the Commission and open to public inspection.

Pursuant to the order of August 29, 1977, Petitioner was authorized to sell to El Paso excess gas arising from specifically enumerated self-help supplies of gas of which Petitioner had acquired control, it is stated. It is further stated that in El Paso companion proceeding in docket No. CP77-408, El Paso was authorized to transport for Petitioner such volumes of self-help gas, control of which had been acquired by Petitioner.

Petitioner states that it has undertaken an aggressive self-help gas supply acquisition program in an attempt to alleviate curtailments by its pipeline suppliers. It is stated that such program may result in Petitioner having available on some days a supply of gas in excess of its requirements on those days. Consequently, Petitioner proposes to sell any such excess supply to El Paso, if El Paso so desires to purchase such gas, and requests that the Commission amend the order in this proceeding so as to authorize the sale of the subject gas.

Any person desiring to be heard or to make any protest with reference to said petition to amend should on or before September 20, 1978 file with the Federal Energy Regulatory Commission, Washington, D.C. 20426, a petition to intervene or a protest in accordance with the requirements of the Commission's rules of practice and procedure (18 CFR 1.8 or 1.10) and the regulations under the Natural Gas Act (18 CFR 157.10). All protests filed with the Commission will be considered by it in determining the appropriate action to be taken but will not serve to make the protestants parties to the proceeding. Any person wishing to become a party to a proceeding or to participate as a party in any hearing therein must file a petition to intervene in accordance with the Commission's rules.

LOIS D. CASHELL,
Acting Secretary.

[FR Doc. 78-25373 Filed 9-8-78; 8:45 am]

[6740-02]

[Docket No. RI78-38]

SUN OIL CO. (DELAWARE)

Order Granting Petition for Special Relief

ISSUED AUGUST 29, 1978.

On March 13, 1978, Sun Oil Co. (Sun) filed a petition for special relief pursuant to § 2.76(d)(1) [1] of the Commission's general policy and interpretations for the sale of its 100 percent working interest in the gas produced from the Tretbar Well No. 1, Six Mile Field, Beaver County, Okla. (Hugoton Anadarko Area) and sold to Panhandle Eastern Pipeline Co. (Panhandle). Sun seeks authorization to sell the subject gas to Panhandle at a base rate of 50 cents per Mcf.

Currently, Sun is authorized [2] to sell the subject gas at a base rate of 29.5 cents per Mcf at 14.73 psia. By a letter agreement, dated February 27, 1978, Panhandle agreed to pay Sun any rate that the Commission approves.

On April 19, 1978, notice of Sun's petition for special relief was issued. No protests or petitions to intervene were filed.

Sun proposes to repair a casing leak at a cost of $21,150 in order to return the well to production. This expenditure will enable Sun to produce an additional 143,400 Mcf of gross working interest gas over the next 4 years according to Sun's reserve estimate. Staff concludes that the proposed expenditure of $21,150 is reasonable.

Due to the nature of the filing, [3] staff decided that no additional data or field investigation was needed.

Inasmuch as a base rate of 50.0 cents per Mcf at 14.73 psia is requested, the estimated additional revenues therefrom of $22,708 is less than $50,000, and the proposed new investment of $21,150 exceeds 25 percent of the estimated additional revenues, we conclude that Sun's petition meets the criteria for special relief set forth for minor projects in 18 CFR 2.76(d)(1). Accordingly, we believe that it is in the public interest to grant Sun's petition for special relief.

The Commission orders: (A) Sun's petition for special relief, filed in docket No. RI78-38, is hereby granted.

(B) Sun is authorized to collect a base rate of 50 cents per Mcf at 14.73 psia for the sale of natural gas from its Tretbar Well No. 1, located in Beaver County, Okla. to Panhandle, effective upon the date of completion of the proposed work or date of the Commission order herein, whichever is later, subject to the conditions set forth in paragraphs (C) and (D) below.

(C) Sun must file a statement signed by Panhandle that the proposed work has been completed to its satisfaction within 30 days of the effective date specified in paragraph (B) above.

(D) Sun must file an executed contract amendment providing for the payment of the approved rate and a notice of independent producer rate change within 30 days of the date of the order herein.

By the Commission.

KENNETH F. PLUMB,
Secretary.

[FR Doc. 78-25374 Filed 9-8-78; 8:45 am]

[1] This section and the subsections thereof provide, among other things, that the petitioner may file less information than is normally required in order to justify its petition for special relief when (1) The proposed work will yield petitioner less than $50,000 in additional revenue; (2) The proposed investment in the project exceeds 25 percent of the estimated additional revenues generated as a result thereof; (3) The gas is sold at a rate less than 50 cents per Mcf at 14.73 psia, exclusive of production or severance taxes.

[2] Sun is authorized to sell the subject gas by a certificate issued in docket No. CI75-248 and a contract, dated September 26, 1961, on file as rate schedule No. 561.

[3] See footnote 1, *supra*.

[6740-02]

[Docket No. CP78-491]

TENNESSEE GAS PIPELINE CO., A DIVISION OF TENNECO INC.

Application

AUGUST 29, 1978.

Take notice that on August 21, 1978, Tennessee Gas Pipeline Co., a Division of Tenneco Inc. (Applicant), P.O. Box 2511, Houston, Tex. 77001, filed in docket No. CP78-491 an application pursuant to section 7(c) of the Natural Gas Act for a certificate of public convenience and necessity authorizing the transportation of up to 25,000 Mcf of natural gas per day for a primary term ending October 31, 1988, for Alabama-Tennessee Natural Gas Co. (Alabama-Tennessee), one of Applicant's existing customers, and authorizing the rendition of service to such customers on a permanent basis pursuant to Applicant's CD-1 rate schedule in lieu of petitioner's G-1 rate schedule under which petitioner presently serves Alabama-Tennessee, all as more fully set forth in the application on file with the Commission and open to public inspection.

The gas which Applicant proposes to transport for Alabama-Tennessee would be purchased from Sunmark Exploration Co. (Sunmark) and would be produced from Sunmark's gas reserves in Tatum's Camp Field in Lamar County, Miss., it is said. Applicant proposes to take receipt of such volumes of gas from Alabama-Tennessee at a point of interconnection with Applicant's Delta-Portland line near Applicant's main line valve (MLV) 535 in Forrest County, Miss., and to transport and redeliver up to 25,000 Mcf per

day of the gas to Alabama-Tennessee at Applicant's existing Barton sales meter station delivery point to Alabama-Tennessee in Colbert County, Ala. at Applicant's MLV 552-1 plus 6.11 miles, or, when required by operating conditions, at other mutually agreed upon existing points of interconnection between the companies. It is indicated that Applicant would retain an increment of gas as a supplement to its system gas supply for its system fuel and use requirements.

Applicant states that in order for Alabama-Tennessee to be able to purchase the subject gas, it would be necessary that Alabama-Tennessee's purchases from Applicant be made under Applicant's CD-1 rate schedule since Applicant's G-1 rate schedule is not available to a purchaser who also purchases gas directly from a producer. No change in Alabama-Tennessee's maximum contract quantity would result, it is said.

Applicant indicates that the proposed transportation service would enable Alabama-Tennessee to make available to its present customers supplementary supplies of natural gas needed to help offset the effect of curtailments by Applicant.

Commencing with the date Applicant first delivers gas hereunder, the compensation to be paid each month by Alabama-Tennessee to Applicant for the transportation service by Applicant shall consist of the following charges and credits:

1. *Demand Charge*—(a) For each month, a demand charge equal to sixty cents ($0.60) multiplied by the billing demand. Prior to November 1, 1979, the billing demand shall be equal to the greatest number of Mcf delivered by Applicant to Alabama-Tennessee in any 1 day at the delivery point during the 12-month period ending with the last day of the month for which the monthly bill is being rendered, provided that the billing demand shall not be greater than 25,000 Mcf per day. Commencing with November 1, 1979, the billing demand shall be equal to the maximum daily volume.

(b) If, during any month, the total of the transportation volumes Applicant transports and delivers to Alabama-Tennessee hereunder is less than the total of the requested daily volumes during such month, then the monthly demand charge as otherwise computed hereunder shall be reduced by an amount equal to the product derived by multiplying the difference between such volumes for such month by one and ninety-seven hundredths cents (1.97¢) per Mcf.

(c) If the transportation volume for any day or days in a month exceeds the maximum daily volume, Alabama-Tennessee shall pay in addition to the demand charge as otherwise computed hereunder, an added daily demand charge consisting of one and ninety-seven hundredths cents (1.97¢) per Mcf multiplied by such excess volumes of natural gas.

2. *Volume Charge*—For each month, a volume charge equal to seven and sixty-one hundredths cents (7.61¢) per Mcf multiplied by the total of the Transportation Volumes during such month.

Any person desiring to be heard or to make any protest with reference to said application should on or before September 20, 1978, file with the Federal Energy Regulatory Commission, Washington, D.C. 20426, a petition to intervene or a protest in accordance with the requirements of the Commission's rules of practice and procedure (18 CFR 1.8 or 1.10) and the regulations under the Natural Gas Act (18 CFR 157.10). All protests filed with the Commission will be considered by it in determining the appropriate action to be taken but will not serve to make the protestants parties to the proceeding. Any person wishing to become a party to a proceeding or to participate as a party in any hearing therein must file a petition to intervene in accordance with the Commission's rules.

Take further notice that, pursuant to the authority contained in and subject to the jurisdiction conferred upon the Federal Energy Regulatory Commission by sections 7 and 15 of the Natural Gas Act and the Commission's rules of practice and procedure, a hearing will be held without further notice before the Commission or its designee on this application if no petition to intervene is filed within the time required herein, if the Commission on its own review of the matter finds that a grant of the certificate is required by the public convenience and necessity. If a petition for leave to intervene is timely filed, or if the Commission on its own motion believes that a formal hearing is required, further notice of such hearing will be duly given.

Under the procedure herein provided for, unless otherwise advised, it will be unnecessary for Applicant to appear or be represented at the hearing.

LOIS D. CASHELL,
Acting Secretary.

[FR Doc. 78-25375 Filed 9-8-78; 8:45 am]

[6740-02]

TENNESSEE GAS PIPELINE CO., A DIVISION OF TENNECO INC.

[Docket No. CP78-490]

Application

AUGUST 29, 1978.

Take notice that on August 21, 1978, Tennessee Gas Pipeline Co., a Division of Tenneco Inc. (Applicant), Tenneco Building, P.O. Box 2511, Houston, Tex. 77001, filed in docket No. CP78-490 an application pursuant to section 7(c) of the Natural Gas Act for a certificate of public convenience and necessity authorizing Applicant to transport gas for the Brooklyn Union Gas Co. (Brooklyn), all as more fully set forth in the application on file with the Commission and open for public inspection.

Specifically, Applicant states that it has an agreement with Brooklyn to transport gas for Brooklyn in order to enable Brooklyn to receive volumes of natural gas equivalent to volumes of liquefied natural gas (LNG) which Brooklyn would purchase from Distrigas of Massachusetts Corp. (DOMAC). Applicant asserts that under the terms of the agreement DOMAC would deliver daily volumes of LNG to Boston Gas Co. (Boston), e.g. Boston in turn would release equivalent volumes of gas to Applicant for Brooklyn's account, not to exceed a maximum daily volume of 20,000 Mcf of gas, at Applicant's existing Arlington sales meter station delivery point to Boston located in Middlesex County, Mass. Applicant would transport and deliver equal volumes of gas to Brooklyn at Applicant's existing White Plains sales meter station delivery point located in Westchester County, N.Y., and/or to Transcontinental Gas Pipe Line Co. (Transco) for Brooklyn's account at Applicant's existing Rivervale sales meter station delivery point located in Bergen County, N.J., it is asserted.

Applicant states that the transportation rate under the agreement to be paid it by Brooklyn each month is based on a monthly demand charge equal to the product of $0.59 multiplied by the specified maximum daily volume and a volume charge equal to the product of 7.38 cents per Mcf multiplied by the total of the scheduled daily volumes during such month. These rates are subject to adjustment according to the terms of the agreement filed with the application, it is indicated.

Any person desiring to be heard or to make any protest with reference to said application should on or before September 20, 1978 file with the Federal Energy Regulatory Commission, Washington, D.C. 20426, a petition to intervene or a protest in accordance with the requirements of the Commission's rules of practice and procedure (18 CFR 1.8 or 1.10) and the regulations under the Natural Gas Act (18 CFR 157.10). All protests filed with the Commission will be considered by it in determing the appropriate action to be taken but will not serve to make the protestants parties to the proceeding. Any person wishing to become a party to a proceeding or to participate as a party in any hearing therein must file a petition to intervene in accordance with the Commission's rules.

Take further notice that, pursuant to the authority contained in and subject to the jurisdiction conferred upon the Federal Energy Regulatory Com-

mission by sections 7 and 15 of the Natural Gas Act and the Commission's rules of practice and procedure, a hearing will be held without further notice before the Commission or its designee on this application if no petition to intervene is filed within the time required herein, if the Commission on its own review of the matter finds that a grant of the certificate is required by the public convenience and necessity. If a petition for leave to intervene is timely filed, or if the Commission on its own motion believes that a formal hearing is required, further notice of such hearing will be duly given.

Under the procedure herein provided for, unless otherwise advised, it will be unnecessary for Applicant to appear or be represented at the hearing.

LOIS D. CASHELL,
Acting Secretary.

[FR Doc. 78-25376 Filed 9-8-78; 8:45 am]

[6740-02]

[Docket No. CP78-493]

TRI-STATE GAS TRANSMISSION CO.

Application

AUGUST 30, 1978.

Take notice that on August 23, 1978, Tri-State Gas Transmission Co. (Applicant), 1011 Merchants Bank Building, Indianapolis, Ind. 46204, filed in Docket No. CP78-493 an application pursuant to section 7(c) of the Natural Gas Act for a certificate of public convenience and necessity authorizing the construction and operation of certain pipeline and compression facilities and the transporation of between 3,000 Mcf and 5,000 Mcf of natural gas per day for Columbia Gas Transmission Corp. (Columbia), all as more fully set forth in the application which is on file with the Commission and open to public inspection.

Applicant states that Colorado Gas Compression Inc. (CGCI), an affiliate of Applicant, proposes to acquire casinghead gas which it may purchase or develop from the East Mt. Carmel field, Gisbon County, Ind., for sale to Columbia pursuant to CGCI's small producer certificate in Docket No. CS77-419. Applicant further states that it would receive the subject gas from CGCI at the suction point of Applicant's compressor on its pipeline, and would compress and transport the gas to Texas Eastern Transmission Corp.'s (Texas Eastern) interstate pipeline for redelivery to Columbia.

Applicant proposes to construct approximately 12 miles of 4-inch pipeline and related facilities in order to transport the gas, between 3,000 Mcf and 5,000 Mcf per day, to Texas Eastern. Applicant asserts that the cost of the proposed facilities is $375,000 which would be financed through a loan agreement.

It is asserted that Columbia would pay Applicant a charge of 10.0 cents per Mcf for gas delivered until such time as Applicant has recovered 125 percent of the cost of the pipeline, but in no event shall Applicant's recovery exceed $375,000. It is further asserted that when 125 percent has been recovered or $375,000 has been paid, Columbia would pay Applicant 2.0 cents per Mcf.

It is also stated that Columbia will pay Applicant for the compression used to effect deliveries of natural gas to Texas Eastern at a rate of 25.0 cents per Mcf until such time as Applicant has recovered 125 percent of the actual cost of construction of the necessary compression equipment, but in no event shall Applicant's recovery of costs exceed $750,000. Applicant states that Columbia would then pay 15.0 cents per Mcf for compression services.

Applicant states that the proposed arrangement allows Applicant to construct the facilities necessary to give CGCI the ability to sell rather than flare casinghead gas and to permit such gas to enter the interstate market thus assisting Columbia in meeting its gas supply requirements.

Any person desiring to be heard or to make any protest with reference to said application should on or before September 20, 1978, file with the Federal Energy Regulatory Commission, Washington, D.C. 20426, a petition to intervene or a protest in accordance with the requirements of the Commission's rules of practice and procedure (18 CFR 1.8 or 1.10) and the regulations under the Natural Gas Act (18 CFR 157.10). All protests filed with the Commission will be considered by it in determining the appropriate action to be taken but will not serve to make the protestants parties to the proceeding. Any person wishing to become a party to a proceeding or to participate as a party in any hearing therein must file a petition to intervene in accordance with the Commission's Rules.

Take further notice that, pursuant to the authority contained in and subject to the jurdisdiction conferred upon the Federal Energy Regulatory Commission by sections 7 and 15 of the Natural Gas Act and the Commission's rules of practice and procedure, a hearing will be held without further notice before the Commission or its designee on this application if no petition to intervene is filed within the time required herein, if the Commission on its own review of the matter finds that a grant of the certificate is required by the public convenience and necessity. If a petition for leave to intervene is timely filed, or if the Commission on its own motion believes that a formal hearing is required, further notice of such hearing will be duly given.

Under the procedure herein provided for, unless otherwise advised, it will be unnecessary for Applicant to appear or be represented at the hearing.

LOIS D. CASHELL,
Acting Secretary.

[FR Doc. 78-25377 Filed 9-8-78; 8:45 am]

[6740-02]

[Docket No. ID-1846]

WILLIAM G. COUNSIL

Application

AUGUST 30, 1978.

Take notice that on August 10, 1978, William G. Counsil (Applicant), filed a supplemental application pursuant to section 305(b) of the Federal Power Act to hold the following position:

Vice president, Connecticut Yankee Atomic Power Co., public utility.

Any person desiring to be heard or to protest said application should file a petition to intervene or protest with the Federal Energy Regulatory Commission, 825 North Capitol Street NE., Washington, D.C. 20426, in accordance with §§ 1.8 and 1.10 of the Commission's rules of practice and procedure (18 CFR 1.8, 1.10). All such petitions or protests should be filed on or before September 22, 1978. Protests will be considered by the Commission in determining the appropriate action to be taken but will not serve to make protestants parties to the proceeding. Any person wishing to become a party must file a petition to intervene. Copies of this application are on file with the Commission and are available for public inspection.

KENNETH F. PLUMB,
Secretary.

[FR Doc. 78-25378 Filed 9-8-78; 8:45 am]

[6740-02]

[Docket No. ID-1656]

WILLIAM A. BLACK

Application

AUGUST 30, 1978.

Take notice that on July 28, 1978, William A. Black (Applicant), filed an application pursuant to Section 305(b) of the Federal Power Act to hold the following positions:

Executive vice president and director, Indiana & Michigan Electric Co., public utility.

Executive vice president and director, Indiana & Michigan Power Co., public utility.

Director, Indiana-Kentucky Electric Corp., public utility.

Any person desiring to be heard or to protest said application should file a petition to intervene or protest with the Federal Energy Regulatory Commission, 825 North Capitol Street NE., Washington, D.C. 20426, in accordance with §§ 1.8 and 1.10 of the Commission's rules of practice and procedure (18 CFR 1.8, 1.10). All such petitions or protests should be filed on or before September 15, 1978. Protests will be considered by the Commission in determining the appropriate action to be taken, but will not serve to make protestants parties to the proceeding. Any person wishing to become a party must file a petition to intervene. Copies of this application are on file with the Commission and are available for public inspection.

KENNETH F. PLUMB,
Secretary.

[FR Doc. 78-25379 Filed 9-8-78; 8:45 am]

[6740-02]

[Docket No. ER78-527; ER78-19 et al.]

FLORIDA POWER & LIGHT CO.

Order Accepting for Filing and Suspending Rate Schedule, Providing for Hearing, Waiving Regulations and Consolidating Proceedings

Issued AUGUST 30, 1978.

On July 31, 1978 Florida Power & Light Co. (F.P. & L.) submitted for filing as a change in rate schedule an unexecuted agreement as a supplement to its transmission agreement with the city of Homestead, Florida.[1] The original transmission agreement was filed April 20, 1978, in Docket No. ER78-325 and provides for transmission to Homestead of power and associated energy purchased through interchange agreements by Homestead from five utilities with whom F.P. & L. is interconnected, Homestead being interconnected with F.P. & L. as well. The rate schedule for the original transmission agreement was accepted for filing in May 1978, was suspended for one day, made effective subject to refund, and was consolidated and set for hearing in F.P. & L., Docket No. ER78-19. The instant submittal provides for transmission to Homestead of power and associated energy purchased by Homestead from a sixth utility, Lake Worth Utility Authority, and has necessitated a separate and supplemental filing because Homestead and Lake Worth entered into their interchange agreement May 8, 1978, subsequent to the filing date of the original transmission agreement between F.P. & L. and Homestead. The rates, terms, and conditions of service provided in the instant supplement are the same as those provided in the original transmission agreement; therefore, no cost support was filed with the instant submittal.

Notice of F.P. & L.'s filing was issued August 9, 1978, with protests and petitions to intervene due on or before August 18, 1978. No such pleadings have been received.

F.P. & L.'s proposed rates have not been shown to be just and reasonable and may be unjust, unreasonable, unduly discriminatory, preferential, or otherwise unlawful. The Commission, therefore, shall suspend the proposed rates for one day, to become effective September 1, 1978, subject to refund, pending the outcome of a hearing and decision thereon. The Commission shall waive the cost support requirements of section 35.13 of its Regulations for the limited purpose of accepting F.P. & L.'s submittal for filing; however, F.P. & L. shall be required to file complying cost of service support for the instant submittal within 20 days of the date of issuance of this order.

Consolidation of the hearing to be ordered in this docket with the proceeding in Docket Nos. ER78-19, et al. is appropriate. Similar issues of fact and law are presented; 1978 test year data is relied upon in both; and the hearing in ER78-19, et al. has not yet commenced.

The Commission orders: (A) Pursuant to the authority contained in and subject to the jurisdiction conferred upon the Federal Energy Regulatory Commission by section 402(a) of the Department of Energy Act and by the Federal Power Act, particularly sections 205, 206, 301, 308, and 309 thereof, and pursuant to the Commission's rules of practice and procedure and to the regulations under the Federal Power Act (18 CFR Chapter I), a public hearing shall be held concerning the justness and reasonableness of the rate increase proposed by Florida Power & Light Co. in this proceeding.

(B) Pending a hearing and decision thereon, F.P. & L.'s proposed rates and services are hereby accepted for filing and suspended for one day, to become effective September 1, 1978, the rates thereunder to be subject to refund.

(C) The Commission waives section 35.13 of its regulations for the limited purpose of accepting F.P. & L.'s submittal for filing and F.P. & L. hereby is ordered to file cost of service data in support of the instant submittal in consolidated Docket Nos. ER78-19 et al. within 20 days of the date of issuance of this order.

(D) Docket No. ER78-527 hereby is consolidated with Docket Nos. ER78-19, et al. for the purpose of a hearing and decision thereon.

(E) The Secretary shall cause prompt publication of this order to be made in the FEDERAL REGISTER.

By the Commission.

KENNETH F. PLUMB,
Secretary.

[FR Doc. 78-25380 Filed 9-8-78; 8:45 am]

[1] Designated as: Supplement No. 2 to rate schedule FERC No. 25.

[6740-02]

[Docket No. ID-1034]

SAMUEL HUNTINGTON

Application

AUGUST 30, 1978.

Take notice that on July 21, 1978, Samuel Huntington, (Applicant), filed a supplemental application pursuant to section 305(b) of the Federal Power Act to hold the following positions:

Clerk, Massachusetts Electric Co., public utility.
Secretary, The Narragansett Electric Co., public utility.

Any person desiring to be heard or to protest said application should file a petition to intervene or protest with the Federal Energy Regulatory Commission, 825 North Capitol Street NE., Washington, D.C. 20426, in accordance with §§ 1.8 and 1.10 of the Commission's rules of practice and procedure (18 CFR 1.8, 1.10). All such petitions or protests should be filed on or before September 15, 1978. Protests will be considered by the Commission in determining the appropriate action to be taken but will not serve to make protestants parties to the proceeding. Any person wishing to become a party must file a petition to intervene. Copies of this application are on file with the Commission and are available for public inspection.

KENNETH F. PLUMB,
Secretary.

[FR Doc. 78-25381 Filed 9-8-78; 8:45 am]

[6740-02]

[Docket No. ER78-524]

MICHIGAN POWER CO.

Order Accepting for Filing and Suspending Rate Schedule, Waiving Regulations, Granting Interventions and Establishing Procedures

Issued AUGUST 30, 1978.

On July 31, 1978, Michigan Power Co. (MPC) tendered for filing proposed increased rates to its two resale customers,[1] the village of Paw Paw and the city of Dowagiac, Mich. The tendered rates involve a two-step increase

[1] See Attachment A for rate schedule designations.

for service. First, the revised rates would increase revenues from jurisdictional sales and service to these two customers by $45,290 (2.92 percent) based on the 12-month period ending December 31, 1977. MPC proposes an effective date of August 30, 1978, for those rates. Second, the revised rates would increase MPC's revenues by $311,825 for the 12-month period ending December 31, 1977, to compensate it for increases in rates and charges from its primary supplier, Indiana & Michigan Electric Co. (I. & M.E.). MPC proposes that the second phase of the rate increase become effective December 23, 1978. MPC seeks waiver of 18 CFR 35.3 of the regulations for the second phase of the proposed rate increase.

MPC purchases 98 percent of its energy requirements from I. & M.E. By order issued July 20, 1978, in Docket No. ER78-379, the Commission, *inter alia*, suspended proposed I. & M.E. rates for 5 months, after which those rates are to go into effect on December 23, 1978, subject to refund. As a result, MPC proposes that its final increase herein coincide with the effectiveness of I. & M.E.'s increase in Docket No. ER78-379.[2]

Public notice of the instant filing was issued on August 8, 1978, with responses due on or before August 18, 1978. On August 18, 1978, Dowagiac (hereinafter "Petitioner") filed a protest and petition to intervene in this proceeding. In the pleading, Petitioner moves for summary disposition of MPC's addition of accumulated deferred job development investment tax credits to common equity capital. Petitioner requests, inter alia, a 5-month suspension for the interim rate increase and a 39-day suspension for the second phase of the proposed rate increase, resulting in the same effective date for both increases.

Petitioner's motion concerning the summary disposition of MPC's addition of accumulated deferred job development investment tax credits to common equity capital is granted. The Commission in Carolina Power & Light Co., Opinion No. 19, issued August 2, 1978, held that the return allowed on accumulated deferred investment tax credits should be measured by the overall rate of return rather than the higher common equity return. Accordingly, we shall direct MPC to refile its capital structure and rate schedule to reflect the investment tax credit and job development credits in a manner that is consistent with the Carolina Power & Light Co. opinion.

MPC seeks waiver of 18 CFR 35.3, so as to permit the final rates to become effective on December 23, 1978. In light of the fact that the increased rates represent a pass-through of MPC's increased cost of purchased power from I. & M.E., we conclude that waiver of 18 CFR 35.3 is appropriate in the instant case. Further, in the event I. & M.E.'s rates are modified or otherwise adjusted by Commission order in Docket No. ER78-379, MPC will be required to flow-through any refunds received and to adjust its rates to reflect such Commission action.

We note that MPC's proposed rate schedule contains an automatic tax adjustment clause. In the event MPC seeks to adjust its rates pursuant to that provision, MPC will have to file such proposal pursuant to section 205 of the Federal Power Act and to section 35.13 of our Regulations.

We find that Petitioner has demonstrated interests which may be directly affected and which may not be adequately represented by existing parties to the proceeding. We further find that participation by Petitioner may be in the public interest and, as a result we will accord it intervenor status.

Commission review of MPC's filing and the pleading in this docket indicates that the proposed rate schedules have not been shown to be just and reasonable and may be unjust, unreasonable, unduly discriminatory, preferential, or otherwise unlawful. We shall suspend MPC's interim rates for 3 months, until November 30, 1978, when they will become effective subject to refund. We shall suspend MPC's final rates (phase II rates) for 1 day, until December 24, 1978, when they shall becomes effective subject to refund and establish hearing procedures.

The Commission finds: It is necessary and in the public interest that an evidentiary hearing be held in this docket in order for the Commission to discharge its responsibilities under sections 205 and 206 of the Federal Power Act.

The Commission orders: (A) Pursuant to the authority contained in and subject to the jurisdiction conferred upon the Federal Energy Regulatory Commission by section 402(a) of the Department of Energy Act and the Federal Power Act, particularly sections 205, 206, 301, 308, and 309 thereof and pursuant to the regulations under the Federal Power Act (18 CFR Chapter I), a public hearing shall be held concerning the justness and reasonableness of the rates and charges included in the subject filing of Michigan Power Co. in this docket.

(B) Waiver of the notice requirements of 18 CFR 35.3 is appropriate as it relates to the final proposed increased rates and is hereby granted.

(C) Pending such hearing and decision thereon, the proposed rates and charges filed by MPC are hereby accepted for filing subject to the requirements of paragraph F, infra. The interim rates are hereby suspended, and the use thereof deferred until November 30, 1978, when they shall become effective subject to refund. The final rates (phase II rates) are hereby suspended, and the use thereof deferred until December 24, 1978, when they shall become effective subject to refund.

(D) The staff shall prepare and serve top sheets on all parties for settlement purposes on or before January 12, 1979.

(E) A presiding administrative law judge to be designated for that purpose (see delegation of authority, 18 CFR 3.59(d)), shall convene a conference in this proceeding to be held 10 days after the service of top sheets in a hearing room of the Federal Energy Regulatory Commission, 825 North Capitol Street NE., Washington, D.C. 20426. Said judge is authorized to establish all procedural dates and to rule on all motions (except motions to consolidate and sever, and motions to dismiss) as provided for in the Commission's rules of practice and procedure.

(F) MPC is directed to refile its capital structure treatment of Investment Tax Credit as set forth in opinion No. 19, Carolina Power & Light Co., within 30 days of issuance of this order.

(G) Petitioner (Dowagiac) is hereby permitted to intervene in this proceeding subject to the rule and regulations of the Commission: *Provided, however,* that participation of such intervenor shall be limited to the matters specifically set forth in the petition to intervene; and *provided, further,* that the admission of such intervenors shall not be construed as recognition by the Commission that they might be aggrieved by any orders entered in this proceeding.

(H) In the event I. & M.E. is required to modify of adjust its rates as proposed in docket No. ER78-379 by Commission order in that proceeding, then MPC shall flow-through the appropriate portion of any refunds received by reason of said Commission order and shall file revised rates herein to reflect such decision.

(I) The Secretary shall cause prompt publication of this order to be made in the FEDERAL REGISTER.

By the Commission.

KENNETH F. PLUMB,
Secretary.

ATTACHMENT A—MICHIGAN POWER CO., DOCKET ER78-524

Rate Schedule Designations.
Dated: Undated.
Filed: July 31, 1978.

[2]Both I. & M.E. and MPC are a part of the American Electric Power Co. holding company system.

Interim:

Michigan Power Co., FERC Electric Tariff MRS, Original Volume No. 1, Fourth Revised Sheet No. 6 (Supersedes Third Revised Sheet No. 6).

Final:

Michigan Power Co., FERC Electric Tariff MRS, Original Volume No. 1, Fifth Revised Sheet No. 6 (Supersedes Fourth Revised Sheet No. 6).

Michigan Power Co., FERC Electric Tariff MRS, Original Volume No. 1, Second Revised Sheet No. 7 (Supersedes First Revised Sheet No. 7).

[FR Doc. 78-25382 Filed 9-8-78; 8:45 am]

[5740-02]

[Docket Nos. CP74-260 and CP75-269]

NATURAL GAS PIPELINE CO. OF AMERICA

Petition To Amend

AUGUST 25, 1978.

Take notice that on August 16, 1978, Natural Gas Pipeline Co. of America (Petitioner), 122 South Michigan Avenue, Chicago, Ill. 60603, filed in docket Nos. CP74-260 and CP75-269 a petition to amend the Commission's orders issued on July 8, 1975, and August 29, 1975,[1] in the instant dockets, pursuant to section 7(c) of the Natural Gas Act, to extend the number of days for which Petitioner's existing rate schedule WS-1 and rate schedule WS-2 daily winter service quantities can be delivered to some of Petitioner's winter service customers for the 1978-79 winter period, all as more fully set forth in the petition to amend on file with the Commission and open to public inspection.

Petitioner states that under existing agreements with some of its participating customers and with Shell Oil Co. (Shell), Petitioner's participating customers are entitled to receive winter service based on the highest sustainable 100,000 Mcf of gas per day increment in deliverability from Shell reserves as they become available. Petitioner further states that its Gulf Coast line is projected to be delivering at its certificated capacity during the winter period so that Petitioner will not be able to increase the daily winter service quantity to its participating customers as contemplated by the existing agreements. As a result, Petitioner seeks to extend from 100 days to 120 days the period in which it may deliver the winter service volumes to its eight participating customers to fulfill its obligations under the agreements.

Any person desiring to be heard or to make any protest with reference to said petition to amend should on or before September 18, 1978, file with the Federal Energy Regulatory Commission, Washington, D.C. 20426, a petition to intervene or a protest in accordance with the requirements of the Commission's rules of practice and procedure (18 CFR 1.8 or 1.10) and the regulations under the Natural Gas Act (18 CFR 157.10). All protests filed with the Commission will be considered by it in determining the appropriate action to be taken but will not serve to make the protestants parties to the proceeding. Any person wishing to become a party to a proceeding or to participate as a party in any hearing therein must file a petition to intervene in accordance with the Commission's rules.

KENNETH F. PLUMB,
Secretary.

[FR Doc. 78-25383 Filed 9-8-78; 8:45 am]

[1]These proceedings were commenced before the FPC. By joint regulation of Oct. 1, 1977 (10 CFR 1000.1), it was transferred to the Commission.

[6740-02]

[Docket No. ER78-513]

PUBLIC SERVICE CO. OF INDIANA

Order Accepting Rates for Filing, Rejecting Rate for Filing, Waiving Notice, Suspending Rate Increases, Granting Summary Disposition, and Granting Interventions

ISSUED AUGUST 25, 1978.

On July 28, 1978, Public Service Co. of Indiana (PSCI) tendered for filing six (6) rate increase proposals. These are: A revised tariff for wholesale service to municipal utilities without generation; a revised tariff for wholesale service to rural electric membership cooperatives; a revised service schedule for firm power service under an interconnection agreement with city of Crawfordsville (Crawfordsville); a revised service schedule for firm power service under an interconnection agreement with city of Peru (Peru); a revised service schedule for firm power service under an interconnection agreement with city of Logansport (Logansport); and a revised service schedule for firm power service under an interconnection agreement with Hoosier Energy Division of Indiana Statewide Rural Electric Cooperative, Inc. (Hoosier).[1] These revised tariffs and service schedule changes are proposed to become effective 30 days after filing, August 28, 1978; except for the revised service schedule for Peru, which is proposed to become effective on the termination date of Peru's fixed-rate contract, November 1, 1978. The estimated amounts of rate increase for these customers are based on sales forecasts for the 12 month test period ending June 30, 1979. Notice of the proposed changes in rates was issued August 7, 1978, with protests and petitions to intervene due on or before August 10, 1978.

In its cover letter, dated July 28, 1978, submitted with the instant filing, PSCI concedes that its now effective interconnection agreements with Peru and Logansport are fixed rate contracts and are protected under the *Sierra-Mobile* doctrine from unilateral changes by PSCI.[2] However, the Peru interconnection agreement expires November 1, 1978, which is 86 days after the date of filing of the instant submittal. The Logansport interconnection agreement is effective through March 1, 1981. Since the PSCI submittal for Peru was filed merely 6 days early under our pertinent regulation, 18 CFR § 35.3 (Notice requirements) and this untimeliness is de minimus and results in no substantial harm to any person in interest, we shall waive the 60 day notice requirement. However, since the Logansport interconnection agreement does not expire until 1981, and since PSCI does not allege that this agreement conflicts with the public interest under the *Sierra-Mobile* doctrine, supra, we shall not waive our 60 day notice requirement for this submittal and shall reject it for filing.

On August 18, 1978, Hoosier filed a protest and petition to intervene and motion for summary disposition, as also did Wabash Valley Power Association, Inc. and 13 rural electric membership cooperatives (Wabash), in a joint pleading.[3]

In addition to alleging bases for intervention, these persons request that PSCI's filing be suspended for the

[1]Rate schedule designations are shown on attachment A.

[2]Nothing in the statutes we administer empowers utilities to change contracts with their customers, unilaterally. A contractually fixed rate cannot be increased until we first determine that it is "so low as to conflict with the public interest". *United Gas Pipe Line Co. v. Mobile Gas Service Corp.*, 350 U.S. 332, 345 (1956). This prerequisite for agency abrogation of effective contract rates requires a prior showing that "the rate is so low as to adversely affect the public interest as where it might impair the financial ability of the public utility to continue its service, cast upon the consumer an excessive burden, or be unduly discriminatory". *FPC v. Sierra Pacific Power Co.*, 350 U.S. 348, 355 (1956). These principles are known as the *Sierra-Mobile* doctrine.

[3]These cooperatives are: Boone County Rural Electric Membership Corp.; Carroll County Rural Electric Membership Corp.; Clark County Rural Electric Membership Corp.; Fulton County Rural Electric Membership Corp.; Hancock County Rural Electric Membership Corp.; Hendricks County Rural Electric Membership Corp.; Kosciusko County Rural Electric Membership Corp.; Miami-Cass County Rural Electric Membership Corp.; Parke Rural Electric Membership Corp.; Tipmont Rural Electric Membership Corp.; United Rural Electric Membership Corp.; Wabash County Rural Electric Membership Cooperation; and Warren County Rural Electric Membership Cooperation.

maximum statutory period. In support, they allege that PSCI's proposed rate of return is excessive and that its cost of service statement is inflated in various and substantial parts.

Wabash moves for summary disposition on four of these disputed parts of PSCI's cost of service support. It is alleged, in these instances, that PSCI did not follow binding Commission precedent as to cost of service methodology and, hence, that adverse summary disposition of these methodologies used by PSCI is appropriate in order that the parties in any hearing proceeding set in this docket need not litigate methodological and related factual questions forclosed from consideration by prior Commission action. We agree as to two of these objections to PSCI's filing. First, PSCI added post-1970 accumulated deferred investment tax credits (ADITC) exclusively to common equity, rather than spreading the credits proportionately through its entire test year capital structure. This treatment of ADITC is inconsistent with our determination in Opinion No. 19, issued August 2, 1978, in *Carolina Power & Light Co.*, where we required proportionate treatment, and, therefore, summary disposition is appropriate here. Second, PSCI allocates cost responsibility of selected transmission facilities differently than it allocates the bulk of its transmission system. This procedure is not consistent with the "rolled-in" method, whereby the transmission grid and transmission-level radials are functionally consolidated for allocation, adopted by the FPC in Opinion No. 783 in PSCI Docket Nos. E-8586 and E-8587 (November 10, 1976).[4] Again, summary disposition is appropriate.

On a third issue—whether general plant should be functionalized on the basis of labor or plant investment ratios—Wabash asserts that Opinion No. 20, issued August 3, 1978 in *Minnesota Power & Light Co.*, (MP&L) compels the use of labor ratios and consequently compels the revision of PSCI's filing, which used plant investment ratios for functionalization. Opinion No. 20 was based on both a review of the items included in particular accounts (389 through 399) and on an analysis of the particular facts in *MP&L's* case. The treatment of this issue by both the Commission and PSCI in past PSCI cases is somewhat checkered. In Opinion No. 783, the Commission permitted the use of plant investment ratios on the basis that their application was not unreasonable. The Commission did not hold in this opinion that plant investment ratios were the most appropriate method of functionalizing. In *Public Service Co. of Indiana* v. *F.E.R.C.*, 575 F.2d 1204, 1218-1219 (7th Cir. 1978), the court held that the Commission's holding in Opinion No. 783 was a reasonable exercise of the FPC's discretion and was based on substantial evidence. In a case (Docket Nos. ER76-149 and E-9537) filed prior to the issuance of Opinion No. 783, PSCI functionalized the general plant accounts on the basis of labor ratios. Although this case has not yet come to the Commission for decision, we note that no party therein contests the use of labor ratios. Finally, we have the instant filing, tender of which was made before the issuance of Opinion No. 20. Under these circumstances, we cannot make summary disposition of this issue, and we shall exercise our discretion so as to give PSCI the opportunity to show that its situation is exceptional and that some method of functionalization other than labor ratios is appropriate. However, we do not here depart from the general rule pronounced in Opinions Nos. 13 (*Idaho Power Co.*, issued May 4, 1978) and 20, and we hold that PSCI's burden is to show that the labor ratios are unreasonable as applied to the company, not merely that its alternative method might be reasonable.

A further issue raised for summary disposition is whether PSCI properly synchronizes interest expense deductions with its cost of long term debt for the test year period. Resolution of this issue depends upon the additional development of pertinent factual information which should be reserved for the hearing proceeding to be convened in this docket, infra. However, on PSCI's treatment of ADITC, transmission plant allocation, and functionalization of general plant, we shall grant adverse summary disposition of PSCI's methodology and require PSCI to file revisions to its submittal reflecting our views as stated.[5]

On August 18, 1978, Indiana Municipal Electric Association (IMEA), and 37 of its members who are municipal customers of PSI [6] filed a protest, petition to intervene, motion to reject, request for summary disposition and an alternative request for maximum suspension and hearings. In addition to challenging PSCI's requested rate of return as excessive, and raising the cost of service methodology issues for summary disposition discussed supra, IMEA raises additional objections to PSCI's cost of service data that are appropriate for disposition in the hearing proceeding to be convened in this docket, infra. Among these are questions of whether PSCI has properly synchronized its interest expense deduction for tax purposes with its cost of long-term debt for the test period; whether the reserve fund included for protection against financial loss due to power outages is proper; whether rate case expenses should be amortized; whether a 75 percent demand ratchet is compatible with a 12 month coincident peak capacity cost allocation method; and whether an automatic tax adjustment clause is necessary.[7]

On August 18, 1978, cities of Logansport and Peru filed a petition to intervene, formal protest and motion to reject filing. These customers raise rate of return and cost of service questions similar to those raised by the other intervenors.

On August 17, 1978, Henry County Rural Electric Membership Cooperative and Jackson County Rural Electric Membership Cooperative filed jointly a protest and petition to intervene. These customers object to PSCI's requested rate of return as based on overblown cost of service data, and object to PSCI's ratchet clause.

Our review indicates that the rates filed by PSCI have not been shown to be just and reasonable and may be unjust, unreasonable, unduly discriminatory or otherwise unlawful. Therefore, we shall accept for filing, not including those parts summarily disposed of, supra, the submittals in this docket, except for that with respect to Logansport, which we shall reject. The effective date of our acceptance for filing of the revised service schedule for Peru shall be the expiration date of its fixed rate contract for interconnection service, November 1, 1978. All submittals accepted for filing, including that of Peru, shall be suspended, subject to refund, until January 28, 1979. In addition, we find that intervention by all petitioners may be in the public interest.

The Commission orders: (A) Pursuant to the authority contained in and subject to the jurisdiction conferred upon the Federal Energy Regulatory Commission by section 402(a) of the DOE Act and by the Federal Power Act, particularly sections 205, 206, 301, 308 and 309 thereof, and pursuant to

[4] *Aff'd*, 575 F.2d 1204, 1217-1218 (7th Cir. 1978).

[5] Hoosier moves for summary disposition on the first, third and fourth issues, as do cities of Logansport and Peru, discussed infra, while IMEA, discussed infra, moves for summary disposition of all four.

[6] These members are: Cities and towns of Advance; Bainbridge; Bargersville; Centerville; Coatesville; Covington; Darlington; Dublin; Dunreith; Edinburg; Flora; Greendale; Greenfield; Hagerstown; Jamestown; Knightstown; Ladoga; Lawrenceburg; Lebanon; Lewisville; Linton; Middletown; Montezuma; Paoli; Pendleton; Pittsboro; Rising Sun; Rockville; Scottsburg; South Whitley; Spiceland; Straughn; Thorton; Tipton; Veedersburg; Waynetown; and Williamsport and Crawfordsville Electric Light and Power.

[7] PSCI's tax adjustment provision is an automatic flow through formula, and therefore it must be submitted with cost of service support as a rate change filing under our regulations 18 CFR 35.3 and 35.13 30 to 90 days before implementation.

the Commission's rules of practice and procedure and the regulations under the Federal Power Act (18 CFR, Chapter I), a public hearing shall be held concerning the justness and reasonableness of the rates proposed by PSCI in this proceeding.

(B) Pending a hearing and decision thereon, the following submittals by PSCI are accepted for filing and are suspended for five months, to become effective, subject to refund, January 28, 1979: Tariff revisions for wholesale service to all-requirements municipals; tariff revisions for wholesale service to cooperatives; service schedule to Crawfordsville's interconnection agreement; and service schedule revisions to Hoosier's interconnection agreement.

(C) Waiver is granted of our 90 day notice requirement for PSCI's Peru submittal.

(D) Pending a hearing and decision thereon, PSCI's submittal of service schedule revisions to the Peru interconnection agreement is accepted for filing as of November 1, 1978, and suspended, to become effective, subject to refund, January 28, 1978.

(E) PSCI's submittal of service schedule revisions to the Logansport interconnection agreement is rejected for filing.

(F) Petitioners' requests that PACI's filing be rejected are denied.

(G) Motions by petitioners for adverse summary disposition of PSCI's method of treating accumulated deferred investment tax credit, and allocation of transmission grid and transmission-level radials are granted and PSCI is required to file revisions to its submittal in this docket in compliance with our determinations within 30 days of the date of issuance of this order; all other motions for summary disposition are denied.

(H) All petitioners are permitted to intervene in this proceeding subject to the rules and regulations of the Commission: Provided, however, that participation by these intervenors shall be limited to matters set forth in their respective petitions to intervene; and Provided, further, that the admission of these intervenors shall not be construed as recognition by the Commission that they might be aggrieved because of any order or orders of the Commission in this proceeding.

(I) An administrative law judge to be designated by the Chief Administrative Law Judge for that purpose, shall convene a conference in this proceeding to be held within ten (10) days after the serving of top sheets in a hearing room of the Federal Energy Regulatory Commission, 825 North Capitol Street NE., Washington, D.C. 20426.

(J) The Staff shall prepare and serve top sheets on all parties on or before December 7, 1978.

(K) The Secretary shall cause prompt publication of this order to be made in the FEDERAL REGISTER.

By the Commission.

KENNETH F. PLUMB,
Secretary.

ATTACHMENT A

PUBLIC SERVICE COMPANY OF INDIANA, INC. RATE SCHEDULE DESIGNATIONS DOCKET NO. ER78-513

Dated: July 28, 1978.
Filed: July 28, 1978.
Effective: (1)(2)(3) and (4) August 28, 1978 (5) November 1, 1978.

Designation and Description

1. FERC Electric Tariff, Fifth Revised Vol. No. 1 (Supersedes FERC Electric Tariff, Fourth Revised Vol. No. 1)—All Requirements Service to 41 Municipals.
2. FERC Electric Tariff, Third Revised Vol. No. 2 (Supersedes FERC Electric Tariff, Second Revised Vol. No. 2)—All Requirements Service to 15 REMC's.
3. Supp. No. 15 to Rate Schedule FERC No. 222 (Supersedes Supp. No. 12 to Rate Schedule FERC No. 222)—Revised Firm Power Service Schedule G for Hoosier.
4. Supp. No. 6 to Rate Schedule FERC No. 229 (Supersedes Supp. No. 1 to Rate Schedule FERC No. 229)—Revised Firm Power Service Schedule A for Crawfordsville, Ind.
5. Supp. No. 6 to Rate Schedule FERC No. 212 (Supersedes Supp. No. 1 to Rate Schedule FERC No. 212)—Revised Firm Power Service Schedule A for Peru.
6. Supp. No. 6 to Rate Schedule FERC No. 223 (Supersedes Supp. No. 1 to Rate Schedule FERC No. 223)—Revised Firm Power Service Schedule A for Logansport.

[FR Doc. 78-25384 Filed 9-8-78; 8:45 am]

[6740-02]

[Docket No. RP72-121 PGA 78-3]

SOUTHWEST GAS CORP.

Notice of Change in Rates Pursuant to Purchased Gas Cost Adjustment

AUGUST 31, 1978.

Take notice that on August 23, 1978, Southwest Gas Corp. ("Southwest") tendered for filing First Revised Sheet No. 10 constituting the statement of rates of its FERC gas tariff, original volume No. 1. According to Southwest, the purpose of this filing is to adjust rates of Southwest under its purchased gas adjustment clause in section 9 of the general terms and conditions contained in said tariff, as a result of changes in rates from its supplier, Northwest Pipeline Corp. ("Northwest"), effective October 1, 1978. The proposed effective date for Southwest's proposed change in rates is October 1, 1978.

Southwest states that copies of the filing have been mailed to the Nevada Public Service Commission, the California Public Utilities Commission, Sierra Pacific Power Co. and C.P. National (formerly California-Pacific Utilities Co.).

Any person desiring to be heard, or to protest said filing, should file a petition to intervene or protest with the Federal Energy Regulatory Commission, 825 North Capitol Street NE., Washington, D.C. 20426, in accordance with sections 1.8 and 1.10 of the Commission's rules of practice and procedure (18 CFR 1.8, 1.10). All such petitions or protests should be filed on or before September 11, 1978. Protests will be considered by the Commission in determining the appropriate action to be taken but will not serve to make protestants parties to the proceeding. Any person wishing to become a party must file a petition to intervene. Copies of this filing are on file with the Commission and are available for public inspection.

KENNETH F. PLUMB,
Secretary.

[FR Doc. 78-25385 Filed 9-8-78; 8:45 am]

[6740-02]

[Docket No. CP68-245]

TENNESSEE GAS PIPELINE CO. A DIVISION OF TENNECO INC.

Petition To Amend

SEPTEMBER 1, 1978.

Take notice that on August 23, 1978, Tennessee Gas Pipeline Co., a division of Tenneco Inc. (Petitioner), P.O. Box 2511, Houston, Tex. 77001, filed in docket No. CP68-245, a petition to amend the order of May 24, 1968, issued in the instant docket (FPC)[1] pursuant to section 7(c) of the Natural Gas Act so as to authorize a new exchange delivery point, all as more fully set forth in the petition to amend on file with the Commission and open to public inspection.

It is indicated that pursuant to the order of May 24, 1968, Petitioner was authorized to transport natural gas for Trunkline Gas Co. (Trunkline) pursuant to the terms of a gas transportation contract dated June 18, 1968, between the two companies. Petitioner indicates that it receives the volumes of gas daily from Trunkline at the Centerville delivery point and transports such volumes for delivery to Trunkline at a point of interconnection between the facilities of Petitioner and Trunkline near Kinder, La. (Kinder redelivery point).

By this amendment Petitioner requests authorization to add a new delivery point (Centerville-alternate delivery point) in St. Mary Parish, La., to effect deliveries from Trunkline to Co-

[1] This proceeding was commenced before the FPC. By joint regulation of Oct. 1, 1977 (10 CFR 1000.1) it was transferred to the Commission.

lumbia Gulf Transmission Co. (Columbia Gulf) for Petitioner's account. It is indicated that pursuant to a letter agreement dated August 1, 1978, each day, the total volume of gas which Trunkline delivers to Petitioner at the Centerville delivery point plus the volume delivered, as requested by Petitioner for its account, at the Centerville-alternate delivery point would be redelivered by Petitioner to Trunkline on such day at the Kinder redelivery point. Upon receipt of the requested authorization, Petitioner will file amended tariff sheets to its rate schedule T-11, it is said.

Any person desiring to be heard or to make any protest with reference to said petition to amend should on or before September 25, 1978, file with the Federal Energy Regulatory Commission, Washington, D.C. 20426, a petition to intervene or a protest in accordance with the requirements of the Commission's rules of practice and procedure (18 CFR 1.8 or 1.10) and the regulations filed under the Natural Gas Act (18 CFR 157.10). All protests with the Commission will be considered by it in determining the appropriate action to be taken but will not serve to make the protestants parties to the proceeding. Any person wishing to become a party to a proceeding or to participate as a party in any hearing therein must file a petition to intervene in accordance with the Commission's rules.

KENNETH F. PLUMB,
Secretary.

[FR Doc. 78-25386 Filed 9-8-78; 8:45 am]

[6740-02]

[Docket No. CP78-486]

TRANSCONTINENTAL GAS PIPE LINE CORP.

Pipeline Application

SEPTEMBER 1, 1978.

Take notice that on August 16, 1978, Transcontinental Gas Pipe Line Corp. (Applicant), P.O. Box 1396, Houston, Tex. 77001, filed in docket No. CP78-486, an application pursuant to section 7(c) of the Natural Gas Act as amended, and the rules and regulations of the Federal Energy Regulatory Commission (Commission), for a certificate of public convenience and necessity authorizing the construction, installation, and operation of certain pipeline facilities, all as more fully set forth in the application which is on file with the Commission and open to public inspection.

Applicant states that it seeks authorization to construct, install, and operate a meter and regulator station in West Cameron block 405 and 8 miles of 10-inch pipeline from block 405 to a subsea tap on Stingray Pipeline Co.'s (Stingray) 36-inch line in block 277, west Cameron area. Applicant further states that such facilities will be utilized to attach block 405 reserves which will be dedicated and sold to Applicant. It is also stated that Trunkline Gas Co. has agreed to utilize a portion of its capacity in Stingray to cause Applicant's gas to be delivered to the High Island offshore system at High Island block A0330 for transportation to Applicant's system in onshore Louisiana.

Applicant states that the estimated cost of the proposed facilities is $3,400,000, which will be financed initially from funds on hand or short-term borrowings, with permanent financing to be arranged at a later date.

Any person desiring to be heard or to make any protest with reference to said application, on or before September 25, 1978, should file with the Federal Energy Regulatory Commission, Washington, D.C. 20426, a petition to intervene or a protest in accordance with the requirements of the Commission's rules of practice and procedure (18 CFR 1.8 or 1.10). All protests filed with the Commission will be considered by it in determining the appropriate action to be taken, but will not serve to make the protestants parties to the proceeding. Any person wishing to become a party to a proceeding, or to participate as a party in any hearing therein, must file a petition to intervene in accordance with the Commission's rules.

Take further notice that, pursuant to the authority contained in and subject to the jurisdiction conferred upon the Federal Energy Regulatory Commission by sections 7 and 15 of the Natural Gas Act and the Commission's rules of practice and procedure, a hearing will be held without further notice before the Commission on this application if no petition to intervene is filed within the time required herein, if the Commission on its own review of the matter finds that a grant of the certificate is required by the public convenience and necessity. If a petition for leave to intervene is timely filed, or if the Commission on its own motion believes that a formal hearing is required, further notice of such hearing will be duly given.

Under the procedure herein provided for, unless otherwise advised, it will be unnecessary for Applicant to appear or be represented at the hearing.

KENNETH F. PLUMB,
Secretary.

[FR Doc. 78-25387 Filed 9-8-78; 8:45 am]

[6740-02]

[Docket No. CP78-494]

UNITED GAS PIPE LINE CO.

Application

SEPTEMBER 1, 1978.

Take notice that on August 23, 1978, United Gas Pipe Line Co. (Applicant), P.O. Box 1478, Houston, Tex. 77001, filed in docket No. CP78-494, an application pursuant to section 7(c) of the Natural Gas Act for a certificate of public convenience and necessity authorizing the transportation of up to 4,000 Mcf of natural gas per day for Columbia Gas Transmission Corp. (Columbia Gas), all as more fully set forth in the application on file with the Commission and open to public inspection.

It is stated that Columbia Gas has acquired the right to purchase volumes of natural gas produced from the Bayou Jean LaCroix field area, Terrebonne Parish, La., attributable to the interest of Louisiana Land & Exploration Co., and that in order for Columbia Gas to receive this gas into its system it has requested Applicant to transport up to 4,000 Mcf of gas per day on a best efforts basis. It is stated that Columbia Gas would deliver or cause the subject gas to be delivered to Applicant for Columbia Gas' account, on Applicant's 8-inch pipeline in Terrebonne Parish, La. Pursuant to the transportation agreement dated June 22, 1978, between the two companies, Applicant proposed to transport the subject gas to Shell Oil Co.'s (Shell) existing Lirette processing plant in Terrebonne Parish for processing. After such gas has been processed, Applicant proposes to redeliver equivalent volumes, less allowances for fuel and company-used gas and for plant volume reduction (PVR), to Columbia Gas at Erath, La., it is said. Applicant indicates that said redelivery would be accomplished by it directing Sea Robin Pipeline Co. to deliver said volumes at Erath, La.

Applicant indicates that it would charge Columbia Gas an amount per Mcf equal to Applicant's average jurisdictional transmission cost of service in effect from time to time in Applicant's southern rate zone, as such may be determined by the Commission, less any amount included in such average jurisdictional transmission cost of service which is attributable to gas consumed in the operations of Applicant's pipeline system, which current average jurisdictional transmission costs of service, exclusive of gas cost consumed in Applicant's operation, is 18.84 cents per Mcf in its southern rate zone.

Any person desiring to be heard or to make any protest with reference to said application should on or before

September 25, 1978, file with the Federal Energy Regulatory Commission, Washington, D.C. 20426, a petition to intervene or a protest in accordance with the requirements of the Commission's rules of practice and procedure (18 CFR 1.8 or 1.10) and the regulations under the Natural Gas Act (18 CFR 157.10). All protests filed with the Commission will be considered by it in determining the appropriate action to be taken but will not serve to make the protestants parties to the proceeding. Any person wishing to become a party to a proceeding or to participate as a party in any hearing therein must file a petition to intervene in accordance with the Commission's rules.

Take further notice that, pursuant to the authority contained in and subject to the jurisdiction conferred upon the Federal Energy Regulatory Commission by sections 7 and 15 of the Natural Gas Act and the Commission's rules of practice and procedure, a hearing will be held without further notice before the Commission or its designee on this application if no petition to intervene is filed within the time required herein, if the Commission on its own review of the matter finds that a grant of the certificate is required by the public convenience and necessity. If a petition for leave to intervene is timely filed, or if the Commission on its own motion believes that a formal hearing is required, further notice of such hearing will be duly given.

Under the procedure herein provided for, unless otherwise advised, it will be unnecessary for Applicant to appear or be represented at the hearing.

KENNETH F. PLUMB
Secretary.

[FR Doc. 78-25388 Filed 9-9-78; 8:45 am]

[6740-02]

[Project No. 2727]

BANGOR HYDRO-ELECTRIC CO.

Application for Approval of Exhibit R

SEPTEMBER 1, 1978.

Public notice is given that an application for approval of exhibit R filed on April 7, 1976, and supplemented on May 16, 1978, under the Federal Power Act, 16 U.S.C. 791a-825r, by Bangor Hydro-Electric Co. (Applicant) (correspondence to: Mr. Gerald F. Hart, Vice President-Engineering, Bangor Hydro-Electric Co., 33 State Street, Bangor, Maine 04401) for its Ellsworth project No. 2727. The project is located on the Union River in the city of Ellsworth, Hancock County, Maine.

The Applicant filed an exhibit R (recreational use plan) which describes the existing recreational uses of the project reservoirs (Graham Lake and Lake Leonard) including fishing, boating, camping, and swimming.

The Applicant proposes to develop a boat launch facility adjacent to Route 180 at the northwest end of Graham Lake Dam. The Maine Bureau of Parks and Recreation has provided the Applicant with the plans and specifications for the boat launch and is prepared to grant funds necessary for its construction if the Applicant agrees to maintain the facility. The Applicant would also be required to furnish a safety boom at Graham Lake Dam.

Anyone desiring to be heard or to make any protests about this application should file a petition to intervene or a protest with the Federal Energy Regulatory Commission, in accordance with the requirements of the Commission's rules of practice and procedure, 18 CFR 1.8 or 1.10 (1977). In determining the appropriate action to take the Commission will consider all protests filed, but a person who merely files a protest does not become a party to the proceeding. To become a party, or to participate in any hearing, a person must file a petition to intervene in accordance with the Commission's Rules. Any protest or petition to intervene must be filed on or before October 16, 1978. The Commission's address is: 825 North Capitol Street NE., Washington, D.C. 20426.

The application is on file with the Commission and is available for public inspection.

KENNETH F. PLUMB,
Secretary.

[FR Doc. 78-25389 Filed 9-9-78; 8:45 am]

[6740-02]

[Docket Nos. ER78-526 and ER77-331]

CENTRAL POWER & LIGHT CO.

Order Accepting for Filing and Suspending Rates and Services for Interchange Service, Allowing Intervention and Establishing Procedures

AUGUST 30, 1978.

On July 31, 1978, Central Power & Light Co. (CPL) tendered for filing a proposed Interchange Agreement (Agreement) for service to its generating wholesale customers, South Texas Electric Cooperative, Inc., and Medina Electric Cooperative, Inc., hereinafter referred to as "STEC/MEC." The proposed agreement would supersede the rates contained in the existing interconnection agreement covering sales of electric power to STEC/MEC as set forth in docket No. ER77-331.

By order issued May 9, 1978, in docket No. ER77-331, the Commission accepted the current agreement for filing effective May 4, 1976, but found that the fuel adjustment clause did not conform with § 35.14 of the regulations and ordered CPL to file a conforming fuel clause within 30 days.[1] By order issued July 5, 1978, the Commission granted CPL's request for rehearing and an extension of time to July 31, 1978, to file a conforming fuel clause. On July 31, 1978, in docket No. ER77-331, CPL notified the Commission of its submittal in the instant docket and requested a further extension such that the conforming fuel clause would become effective the same day as the rest of the instant rate application in this docket.[2]

In the instant submittal CPL requests the same relief requested in the foregoing paragraph or in the alternative, a waiver of the Commission's notice requirements such that both the proposed rates and the conforming fuel clause go into effect as of July 31, 1978, the last day that the Commission has allowed the nonconforming clause to remain in effect.

The present firm power rate is a two-step load factor type equivalent to $2 per kW-month plus 3.75 mills/kWh. Such charges are subject to a 15 to 20 cents per million BTU-type fuel adjustment clause. Monthly billing demand is the greater of the specified contract demand, measured demand or 10,000 kW.

The proposed interconnection agreement provides for firm power and economy energy service on terms of conditions which are essentially the same as those of the current agreement. Each year CPL will provide firm power and associated energy to STEC/MEC in excess of their net generating capability less 15 percent at estimated monthly contract demands specified by October 1 of the prior year. By that date, STEC/MEC shall also specify estimated contract demands for four subsequent calendar years, which may not be revised more than 10 percent each year without CPL's consent. The proposed agreement will remain in effect until December 1983 and there-

[1] On June 5, 1978, CPL filed an application requesting rehearing of the fuel clause filing requirement of the May 9 order, and requested an extension of time to file a new fuel clause with respect to STEC/MEC until July 30, 1978. By notice issued June 16, 1978, the Secretary of the Commission extended the time for CPL to file a fuel clause in compliance with the Commission's May 9 order until July 31, 1978. By order issued August 14, 1978, the Commission granted STEC/MEC intervention and denied rehearing of STEC/MEC's petition seeking an effective date of the conforming fuel clause earlier than July 31, 1978.

[2] See *Central Power & Light Co.*, docket No. ER77-331; notice of filing of superseding tariff application and conditional request for further extension of time, July 31, 1978.

grams (available from the National Institute on Alcohol Abuse and Alcoholism) encourage the establishment of an appropriate referral system and development of cooperative agreements with other agencies.

Comment: One commenter recommended that § 54a.405(1) of the proposed regulations (now § 54a.404(1)) be revised to require that applications for alcohol treatment and prevention projects under section 311 of the Act document that city and county health agencies have been notified of the proposed project.

Response: Section 54a.405(1) required that treatment and prevention grant applications (1) describe how the propose project will be integrated with and involve the active participation of a wide range of public and nongovernmental agencies, organizations, institutions, and individuals, and (2) specify how such agencies, organizations, institutions, and individuals have been given an opportunity to participate in the development of the proposed project and will be given an opportunity to participate in its implementation and evaluation. The Secretary points out this requirement goes far beyond simple notification of appropriate parties (whether documented or not) and believes it sufficient to encourage grant applicants to solicit the active participation of city and county health agencies (as appropriate) in the development, implementation, and evaluation of prevention and treatment projects. The Secretary notes again that proposed uses of funds appropriated under the Comprehensive Alcohol Abuse and Alcoholism Prevention, Treatment, and Rehabilitation Act must be reviewed and approved or disapproved by local health systems agencies under section 1513 of the Public Health Service Act (42 U.S.C. 300*l*-2) and points out that the governing bodies of these agencies must include representatives of public and private agencies in the area concerned with health. Therefore, no change is made in the regulations.

Comment: One commenter, noting that third-party reimbursement for the cost of alcoholism services is not yet widely available, stated that only a minority of grant applicants can respond in realistic terms to the requirement of § 54a.405(o) of the proposed regulations (now § 54a.404(o)) that grant applications describe how the proposed project will become self-sufficient.

Response: The Secretary notes that public and private third-party financing for alcoholism treatment has increased over the last few years and that the efforts of local alcoholism programs to secure non-Federal funds have been a factor in bringing about this increase. It is true, nonetheless, that third-party reimbursement for alcoholism services is not expanding as rapidly as originally anticipated. For this reason, the Secretary has decided (effective through fiscal year 1979) not to specify the level of non-Federal funding which recipients of grants under section 311 must secure each year. Therefore, § 54a.412 of the proposed regulations (matching rates) has been deleted.[1] In the meantime, the Department will complete a series of studies of the ability of alcoholism treatment programs to collect third-party payments in adequate amounts. The Secretary anticipates the results of these studies will guide the development of departmental policy and regulations on this topic in the future.

However, the requirement of § 54a.405(o) of the proposed regulations has not been revised. The Secretary believes that requiring grant applicants to describe how a proposed project will become self-sufficient stimulates the effort necessary if the proposed project is to establish eligibility for and collect those third-party payments which are available and encourages the integration of the proposed project into existing health and social service delivery systems.

NONDISCRIMINATION

Comment: Two commenters said it was "imperative" that the requirements of § 54a.214 be more explicitly stated. This section of the proposed regulations requires the State plan to provide that the State agency will (1) review admissions to private and public general hospitals and outpatient facilities to assist the Secretary in determining the compliance of such facilities with section 321 of the Act (which prohibits discrimination against alcohol abusers and alcoholics, solely because of their alcohol abuse or alcoholism, in admission or treatment by hospitals and outpatient facilities), and (2) make periodic reports to the Secretary respecting such review. Both commenters expressed concern about the heavy workload these requirements could impose on State alcohol agencies. One requested that the terms "review" and "periodic" be defined. The other suggested the Department make available funds for carrying out the required activities.

Response: As indicated by the commenter, § 54a.214 of the proposed regulations does not set forth explicit requirements but simply repeats the language of section 303(a)(15) of the Act. At the time the proposed regulations were published, it was anticipated that regulations implementing section 321 of the Act (then under development by the Department's Office for Civil Rights) would provide more detailed guidance to State alcohol agencies on their responsibilities under section 303(a)(15). On May 4, 1977, regulations implementing section 321 were published in the FEDERAL REGISTER (42 FR 22676) as part of the regulations implementing section 504 of the Rehabilitation Act of 1973 (45 CFR Part 84). These regulations require that no otherwise qualified handicapped individual shall, solely by reason of his handicap, be excluded from participation in, be denied the benefits of, or be subjected to discrimination under any program or activity receiving financial assistance from the Department. However, the enforcement procedures set forth in appendix B of these regulations (which are identical to the procedures employed by the Department for enforcing title VI of the Civil Rights Act of 1974) do not provide an explicit role for State agencies.

In view of the fact that section 303(a)(15) of the Act makes review of and reporting on admissions to hospitals and outpatient facilities by the State alcohol agency a condition of the receipt of alcohol formula grant funds and that public comments have indicated detailed guidance in carrying out these responsibilities is "urgently needed," the Secretary intends to issue a notice of proposed rulemaking on this matter (consistent with the requirements of 45 CFR Part 84) in the near future.

OTHER

CRITERIA FOR STANDARDS

Section 303(a)(10) of the Act requires the State plan to set forth, in accordance with criteria to be set by the Secretary, standards (including enforcement procedures and penalties) for (A) construction and licensing of public and private treatment facilities, and (B) for other community services or resources available to assist individuals to meet problems resulting from alcohol abuse. Section 54a.212 of the proposed regulations, intended to implement this requirement of the Act, was reserved from the proposed regulations, with a special note inviting comments and suggestions on the scope and content of the criteria. No comments or suggestions were received. The Secretary continues to encourage the submission of comments or suggestions from the public on criteria for standards for alcohol abuse and alcoholism programs, services, and facilities. However, in view of the lack of public comments to date, § 54a.212 is also reserved from the final regulations set forth below.

[1] Sec. 54a.412 of the proposed regulations had been reserved for a separate notice of proposed rulemaking specifying required non-Federal matching rates.

the petitioners' request for data on the price squeeze issue.

The Commission orders: (A) Pursuant to the authority contained in and subject to the jurisdiction conferred upon the Federal Energy Regulatory Commission by section 402(a) of the DOE Act and by the Federal Power Act, particularly sections 205, 206, 301, 307, 308, and 309 thereof, and pursuant to the Commission's rules of practice and procedure and the regulations under the Federal Power Act (18 CFR Ch. I), a public hearing shall be held concerning the justness and reasonableness of the rates and services proposed by the Central Power & Light Co.

(B) Pending such hearing and decision thereon the proposed interchange agreements with the exception of the fuel adjustment clause, filed by CPL on July 31, 1978, are hereby accepted for filing, suspended for 4 months after which they shall become effective on December 31, 1978, subject to refund, on the condition that CPL file, within 30 days, a revised capital structure and rates based thereon in accordance with Commission Opinion No. 19, *Carolina Power & Light Company*, docket No. ER76-495, August 2, 1978.

(C) The proposed fuel adjustment clause filed by CPL on July 31, 1978, is hereby accepted for filing and suspended for 1 day after which it shall become effective on August 1, 1978, subject to refund. CPL is hereby directed to file the modified fuel clause as set forth herein.

(D) The petitioners, South Texas Electric Cooperative, Inc., and Medina Electric Cooperative, Inc., are hereby permitted to intervene in this proceeding subject to the rules and regulations of the Commission; *Provided, however,* That participation by such intervenors shall be limited to matters set forth in their respective petitions to intervene; and *Provided further,* That the admission of such intervenors shall not be construed as recognition by the Commission that they might be aggrieved because of any order or orders of the Commission entered in this proceeding.

(E) The staff shall prepare and serve top sheets on all parties on or before December 1, 1978.

(F) A presiding administrative law judge to be designated by the chief administrative law judge for that purpose (see, delegation of authority, 18 CFR 3.5(d)), shall convene a conference in this proceeding to be held within ten (10) days after the serving of top sheets in a hearing room of the Federal Energy Regulatory Commission, 825 North Capitol Street NE., Washington, D.C. 20426. Said law judge is authorized to establish all procedural dates and to rule upon all motions as provided for in the Commission's rules of practice and procedure.

(G) CPL is granted a waiver of the Commission's notice requirements with regard to the fuel adjustment clause and denied an extension of time for filing the required fuel clause in docket No. ER77-331.

(H) CPL's motion for summary rejection of STEC/MEC price squeeze allegation is denied. The presiding administrative law judge shall convene a prehearing conference within 15 days from the date of this order for the purpose of hearing the petitioners' request for data required to present its case on the price-squeeze issue.

(I) The Secretary shall cause prompt publication of this order to be made in the FEDERAL REGISTER.

By the Commission.

KENNETH F. PLUMB,
Secretary.

[FR Doc. 78-25380 Filed 9-8-78; 8:45 am]

[6740-02]

[Docket No. CP78-489]

COLUMBIA GULF TRANSMISSION CO., ET AL.

Pipeline Application

SEPTEMBER 1, 1978.

Take notice that on August 18, 1978, Columbia Gulf Transmission Co. (Columbia Gulf), P.O. Box 683, Houston, Tex. 77001, and Tennessee Gas Pipeline Co., a division of Tenneco Inc. (Tennessee) filed in docket No. CP78-489 a joint application for certificates of public convenience and necessity authorizing the construction and operation of certain pipeline facilities onshore and offshore Louisiana.

Applicants propose to construct and operate approximately 30.2 miles of 36-inch pipeline onshore and offshore Louisiana, to install and operate a 4,000 horsepower (site rating) gas turbine and centrifugal compressor unit on an existing platform located in block 245 Vermilion area, offshore Louisiana and to install a sixth dehydration train at Pecan Island, Vermilion Parish, La. The pipeline will be a partial loop of the western shoreline of the Blue Water project which is jointly owned by Applicants. The installation of such facilities will increase the capacity of the Blue Water project 300 MMcf per day of which 200 MMcf per day will be for Columbia Gulf and 100 MMcf per day will be for Tennessee.

Any person desiring to be heard or to make any protest with reference to said application, on or before September 25, 1978, should file with the Federal Energy Regulatory Commission; Washington, D.C. 20426, a petition to intervene or a protest in accordance with the requirements of the Commission's rules of practice and procedure (18 CFR 1.8 or 1.10). All protests filed with the Commission will be considered by it in determining the appropriate action to be taken, but will not serve to make the protestants parties to the proceeding. Any person wishing to become a party to a proceeding, or to participate as a party in any hearing therein, must file a petition to intervene in accordance with the Commission's rules.

Take further notice that, pursuant to the authority contained in and subject to the jurisdiction conferred upon the Federal Energy Regulatory Commission by sections 7 and 15 of the Natural Gas Act and the Commission's rules of practice and procedure, a hearing will be held without further notice before the Commission on this application if no petition to intervene is filed within the time required herein, if the Commission on its own review of the matter finds that a grant of the certificate is required by the public convenience and necessity. If a petition for leave to intervene is timely filed, or if the Commission on its own motion believes that a formal hearing is required, futher notice of such hearing will be duly given.

Under the procedure herein provided for, unless otherwise advised, it will be unnecessary for Applicant to appear or be represented at the hearing.

KENNETH F. PLUMB
Secretary.

[FR Doc. 78-25391 Filed 9-8-78; 8:45 am]

[6740-02]

[Docket No. RP78-65]

EAST TENNESSEE NATURAL GAS CO.

Report of Flow Through of Refunds

SEPTEMBER 1, 1978.

Take notice that on August 28, 1978, East Tennessee Natural Gas Co. (East Tennessee) tendered for filing a report of flow through of refunds made pursuant to section 23 of the general terms and conditions of Sixth Revised Volume No. 1 of its FERC gas tariff.

East Tennessee states that on July 14, 1978, it received a refund from Tennessee Gas Pipeline Co., a division of Tenneco Inc. (Tennessee) representing the refund payable to East Tennessee resulting from the Commission's letter order dated May 1, 1978, approving a settlement agreement in docket Nos. RP75-13, et al. East Tennessee states that section 23 of its currently effective FERC gas tariff requires that East Tennessee flow through the refund received from Tennessee within 45 days of receipt. East Tennessee further states that the report of refunds shows the amount of

refund flowed through to each of its jurisdictional customers.

East Tennessee states that copies of the filing have been mailed to all its jurisdictional customers and affected state regulatory commissions.

Any person desiring to be heard or to protest said filing should file a petition to intervene or protest with the Federal Energy Regulatory Commission, 825 North Capitol Street NE., Washington, D.C. 20426, in accordance with §§ 1.8 and 1.10 of the Commission's rules of practice and procedure (18 CFR 1.8, 1.10). All such petitions or protests should be filed on or before September 20, 1978. Protests will be considered by the Commission in determining the appropriate action to be taken, but will not serve to make protestants parties to the proceeding. Any person wishing to become a party must file a petition to intervene; provided, however, that any person who has previously filed a petition to intervene in this proceeding is not required to file a further petition. Copies of this filing are on file with the Commission and are available for public inspection.

KENNETH F. PLUMB,
Secretary.

[FR Doc. 78-25392 Filed 9-8-78; 8:45 am]

[6740-02]

[Docket Nos. ER78-520 and ER77-488 (Phase I)]

EL PASO ELECTRIC CO.

Order Establishing Procedures, Consolidating Proceedings, Rejecting Filing as a Rate Schedule, and Granting Intervention

AUGUST 30, 1978.

On July 31, 1978, El Paso Electric Co. (El Paso) tendered for filing proposed increased rates and charges for sales applicable to Rio Grande Electric Cooperative, Inc., at the Dell City and Van Horn delivery points and to Community Public Service Co. By this filing, El Paso seeks through the inclusion of construction work in progress (CWIP) in rate base [1] to increase revenues from jurisdictional sales and services by $525,700 (9 percent) for the 12-month period succeeding August 31, 1978. El Paso indicates that it is not requesting interim rate relief during the period that its CWIP claim is being litigated, and will continue to charge those rates placed into effect on December 1, 1977, in docket No. ER77-488, subject to refund, or as such rates may be adjusted.

According to El Paso, the instant application is a request for inclusion in rate base of nuclear generation construction work in progress associated with the Company's participation in the Palo Verde project. El Paso maintains that this request continues and expands the relief sought in docket No. ER77-488 under the "severe financial difficulty" standard enunciated in order No. 555[2] and updates total Company Palo Verde CWIP levels through December 31, 1977. El Paso represents that it continues to experience strain on its financing capability occasioned by its extensive construction program, most notably its participation in the Palo Verde project. In support of its claim of "severe financial difficulties", El Paso indicates that in June 1978, Standard & Poors downgraded the Company's rating for commercial paper issuance from A-1 to A-2, citing the extensive financing program facing the Company.

In addition, El Paso requests the Commission to prescribe expedited procedures for the disposition of its CWIP claim consistent with those outlined in public service of New Hampshire and Public Service Co. of New Mexico.[3] El Paso also seeks consolidation of the instant proceedings with those in phase I of docket No. ER77-488, alleging that consolidation would provide a more complete record on the issues than would be the case in separate proceedings.

El Paso is incorporated under the laws of the State of Texas with its principal business office at El Paso, Tex., and is engaged in the generation, transmission, distribution, and sale of electrical energy in the States of Texas and New Mexico.

Notice of the filing was issued on August 8, 1978, with responses due on or before August 18, 1978. On August 11, 1978, Community Public Service Co. (Community) filed a petition to intervene. Community indicates that it has a significant interest in these proceedings and that interest cannot be adequately represented by any other party herein.

Thereafter, on August 18, 1978, Rio Grande Electric Cooperative (Rio Grande) filed a protest, petition to intervene and motion to consolidate. In support of the pleading, Rio Grande asserts that it is a wholesale for resale customer of El Paso, and takes service from the Company at two delivery points. Rio Grande states that no other party to this proceeding can adequately protect interests.

Additionally, Rio Grande maintains that the Commission should order El Paso to file rate schedules incorporating only the cost of service related increase in rates included in this application. Finally, Rio Grande concures with the El Paso request that this proceeding be consolidated with docket No. ER77-488 for the purpose of hearing and decision. Rio Grande further maintains that El Paso should be directed to restate its application so as to exclude unamortized investment tax credits from capital structure. Rio Grande alleges that El Paso's action in the filing of the instant application constitutes constructive abandonment of its prior application. According to Rio Grande, analysis of the two filings (docket No. ER77-488 and docket No. ER78-520) reveals that El Paso has undertaken to make a much more detailed showing of its alleged need for the inclusion of CWIP in rate base. In this proceeding, El Paso offers the testimony of thirteen (13) witnesses, together with supporting schedules and exhibits, whereas in the prior proceeding El Paso included the testimony of only four witnesses.

On August 17, 1978, the presiding judge issued an order staying phase I of the procedural schedule, *inter alia*, in docket No. ER77-488, pending Commission review of the instant application. The judge's decision to grant a stay was premised on the rationale that the Commission would consolidate the two dockets; that there would be many procedural problems if hearings commenced on phase I in docket No. ER77-488, and subsequently the Commission consolidated the two dockets and that it was doubtful that any time would be saved by proceeding with phase I until the Commission ruled on the motion to consolidate. The judge certified the question of whether the stay of phase I of the proceedings in docket No. ER77-488 should continue until Commission review of the application in docket No. ER78-520 for our resolution.

On August 22, 1978, El Paso filed comments on the certification of question by the presiding judge (docket No. ER77-488). El Paso indicates that the sole purpose of the application in docket No. ER78-520 is for the updating of the CWIP balance from that balance per books on December 31, 1976 in docket No. ER77-488 to that on December 31, 1977. In anticipation of a Commission order directing additional direct testimony on CWIP, El Paso alleges that it sought to short-cut the procedure by submitting direct testimony responding to the considerations raised in *Public Service Co. of New Hampshire* and *Public Service Co. of New Mexico, supra.*, as they could be related to El Paso. According to El Paso, most of the information filed as direct testimony in docket No. ER78-520 could be properly classified as rebuttal to the staff testimony in docket No. ER77-488. El Paso urges that consolidation is proper and that the presiding judge's stay on phase I proce-

---

[1] This filing is made pursuant to 18 CFR 2.16 and 18 CFR 35.13.

[2] Order No. 555, docket No. RM75-13, issued Nov. 8, 1976, 18 CFR 2.16(b).

[3] Public Service Company of New Hampshire, docket Nos. EL78-15 and ER78-339, issued June 9, 1978; *Public Service Co. of New Mexico*, docket Nos. ER78-337, et al., issued June 30, 1978.

dural dates in docket No. ER77-488 be lifted so as to permit resumption of the proceedings as near as practicable to the dates originally set. In addition, El Paso requests the Commission to establish phase II proceedings in docket No. ER78-520 so that the cost of service issues raised therein can be heard.

DISCUSSION

Both El Paso and Rio Grande seek consolidation of the instant proceeding with those in phase I of docket No. ER77-488. 18 CFR 1.20(b) indicates that:

> The Commission upon its own motion, or upon motion by a party or staff counsel, may order proceedings involving a common question of law or fact to be consolidated for hearing on any or all the matters in issue in such proceedings.

We conclude that common questions of law and fact exist in these proceedings as to CWIP and rate of return and that it is appropriate to determine the merits of El Paso's claim for inclusion of CWIP in rate base under the severe financial difficulty exception by consolidation of the proceedings in this docket with those in phase I of docket No. ER77-488. In light of the fact that we have determined that consolidation is appropriate, the stay ordered by the presiding judge on August 17, 1978, in phase I of docket No. ER77-488 is hereby vacated consistent with the instructions as set forth hereinafter. Additionally, we conclude that a phase II proceeding in docket No. ER78-520 is not warranted inasmuch as El Paso has represented that the sole purpose of the filing herein is the updating of CWIP balances from the balance per books on December 31, 1976 in docket No. ER77-488 to December 31, 1977.

The portion of the application in docket No. ER78-520 that purports to be a rate schedule filing within the meaning of 18 CFR 35.13 is hereby rejected in its entirety since it involvies rates which are to become effective at an unspecified future date. El Paso has not demonstrated good cause warranting the waiver of 18 CFR 35.3 in this case.

It is well settled that all CWIP except that portion which relates to pollution control and fuel conversion facilities must be excluded from rate base unless there is a showing by the Company of "severe financial difficulty which cannot be otherwise alleviated without materially increasing the cost of electricity to consumers,"[4] as well as a showing of the futility of alternatives and as to how the additional revenues generated from the inclusion of CWIP in rate base will alleviate the claimed severe financial difficulty.[5] We conclude that El Paso's filing herein (docket No. ER78-520) relating to the proposed inclusion of CWIP in rate base under the "severe financial difficulty" standard constitutes an effort to address the considerations raised by the Commission in *Public Service Co. of New Hampshire* and *Public Service Co. of New Mexico*.[6]

El Paso's CWIP presentation in ER78-520 is transmitted to the presiding judge in docket No. ER77-488 for the purpose of consolidation with the proceedings in phase I of docket No. ER77-488. Pursuant to 18 CFR 1.27 the presiding judge is hereby granted the discretion to rule upon the relevancy of all evidence sought to be introduced by the parties to the proceedings and to establish such procedural dates as are appropriate for the expeditious disposition of these consolidated proceedings.

The inclusion of CWIP in rate base under 18 CFR 2.16(b) can only be granted prospectively from a final order of the Commission on rehearing. Indeed, El Paso acknowledges that 18 CFR 2.16(b) contemplates such a procedure. In accordance with 18 CFR 2.16(b), upon the issuance of a final Commission decision on rehearing in phase I of the consolidated proceedings approving the inclusion of some or all of CWIP in rate base, El Paso will be directed to proffer a compliance filing under the applicable portion of the Federal Power Act. The consolidated proceedings shall be instituted under both sections 205 and 206(a) of the Federal Power Act.

Rio Grande's argument concerning the exclusion of amortized investment tax credits from the capital structure is persuassive. The Commission in Carolina Power & Light Co., opinion No. 19, issued August 2, 1978, held that the return allowed on accumulated deferred income tax credits should be measured by the overall rate of return rather than the higher common equity return. Therefore, we shall direct El Paso to refile its capital structure to reflect the investment tax credit in a manner that is consistent with the *Carolina Power & Light Company* opinion.

We find that Community and Rio Grande have demonstrated interests which may be directly affected and which may not be adequately represented by existing parties to the proceeding. We further find that participation by Community and Rio Grande may be in the public interest and, as a result, will grant intervenor status to them.

The Commission finds: It is necessary and in the public interest that an evidentiary hearing be held in this docket in order for the Commission to discharge its responsibilites under sections 205 and 206 of the Federal Power Act.

The Commission orders: (A) Pursuant to the authority contained in and subject to the jurisdiction conferred upon the Federal Energy Regulatory Commission by section 402(a) of the Department of Energy Act and by the Federal Power Act, particularly sections 205, 206, 301, 308, and 309 thereof and pursuant to the Commission's rules of practice and procedure and to the regulations under the Federal Power Act (18 CFR Chapter D), a public hearing shall be held concerning the justness and reasonableness of the rates and charges included in the subject filing of El Paso as proposed to be revised herein.

(B) El Paso's motion to consolidate the proceeding in docket No. ER78-520 with those in phase I of ER77-488, is hereby granted.

(C) Community and Rio Grande are hereby permitted to intervene in the consolidated proceedings subject to the rules and regulations of the Commission: *Provided, however,* That participation of such intervenors shall be limited to the matters affecting asserted rights and interests specifically set forth in the petition to intervene: *And provided further,* That the admission of such intervenors shall not be construed as recognition by the Commission that they might be aggrieved by any orders entered in this proceeding.

(D) The administrative law judge is hereby granted the discretion to establish all additional dates and procedures to be followed for the phased, consolidated proceedings.

(E) El Paso is directed to refile its capital structure to be consistent with the Commission treatment of investment tax credit in opinion No. 19, *Carolina Power & Light Co.,* within thirty (30) days of the issuance of this order.

(F) Waiver of section 35.3 of the regulations is not appropriate.

(G) El Paso's rate schedule filing tendered herein is hereby rejected.

(H) The Secretary shall cause prompt publication of this order to be made in the FEDERAL REGISTER.

By the Commission.

KENNETH F. PLUMB,
Secretary.

[FR Doc. 78-25393 Filed 9-8-78; 8:45 am]

---

[4] Order No. 555, docket No. RM75-13, issued Nov. 8, 1976, at page 16.

[5] *Public Service Co. of New Hampshire,* docket No. ER78-339 and EL78-15, issued June 9, 1978; *Louisiana Power & Light Co.,* docket No. ER77-533, issued Aug. 26, 1977.

[6] *Public Service Co., of New Hampshire,* docket No. EL78-15 and ER78-339, order issued June 9, 1978 and *Public Service Co., of New Mexico,* docket Nos. ER78-337 and ER78-338, order issued June 30, 1978.

[6740-02]

[Docket No. CP77-583]

EL PASO NATURAL GAS CO.

Petition To Amend

SEPTEMBER 1, 1978.

Take notice that on August 21, 1978, El Paso Natural Gas Co. (Petitioner), P.O. Box 1492, El Paso, Tex. 79978, filed in docket No. CP77-583 a petition to amend the order of December 14, 1977, issued in the instant docket (57 FERC ——) pursuant to section 7(c) of the Natural Gas Act and section 157.7(b) of the Commission's regulations (18 CFR 157.7(b)) so as to authorize an increase in the cost limitation which Petitioner is authorized for the construction of certain budget-type facilities, all as more fully set forth in the petition to amend on file with the Commission and open to public inspection.

It is indicated that pursuant to the order of December 14, 1977, Petitioner was authorized, inter alia, to construct, during the calendar year 1978, and operate gas-purchase facilities at a total aggregate cost of $5 million, with an out-of-pocket single project cost limitation of $1,250,000. Petitioner states that the success of its gas acquisition activities has resulted in the construction of gas-purchase facilities in excess of those facilities envisioned by it at the time that the initial application was being prepared for filing. Petitioner now projects that the aggregate cost for budget-type construction of gas-purchase facilities during the balance of the calendar year 1978 may exceed the total cost limitation of $5 million, it is stated. Consequently, Petitioner requests that the December 14, 1977, order be amended to increase said authorized aggregate cost limitation from $5 million to $7 million.

Any person desiring to be heard or to make any protest with reference to said petition to amend should on or before September 25, 1978, file with the Federal Energy Regulatory Commission, Washington, D.C. 20426, a petition to intervene or a protest in accordance with the requirements of the Commission's rules of practice and procedure (18 CFR 1.8 or 1.10) and the regulations under the Natural Gas Act (18 CFR 157.10). All protests filed with the Commission will be considerd by it in determining the appropriate action to be taken but will not serve to make the protestants parties to the proceeding. Any person wishing to become a party to a proceeding or to participate at a party in any hearing therein must file a petition to intervene in accordance with the Commission's rules.

KENNETH F. PLUMB,
Secretary.

[FR Doc. 78—25394 Filed 9-8-78; 8:45 am]

[6740-02]

[Docket No. CP73-244]

MIDWESTERN GAS TRANSMISSION CO.

Petition To Amend

SEPTEMBER 1, 1978.

Take notice that on August 11, 1978, Midwestern Gas Transmission Co. (Applicant), 1100 Milam Building, Houston, Tex. 77002, filed in docket No. CP73-244, a petition to amend opinion No. 743 and order issued September 9, 1975, in said docket, pursuant to section 7(c) of the Natural Gas Act, to delete the authorization for the construction and operation of certain facilities and to grant an extension of the time to construct certain other facilities, all as more fully set forth in the application on file with the Commission and open to public inspection.

Specifically, Applicant states that in opinion No. 743 Applicant was granted a certificate of public convenience and necessity authorizing it to transport and deliver natural gas to Northern Illinois Gas Co. for the account of NI-Gas Supply, Inc., and for the construction and operation of two related compressors on Applicant's southern system. Applicant further states that by order issued December 6, 1977, the Commission "for good cause shown" granted an extension until October 19, 1978, for the completion of the facilities authorized. The facilities authorized have not been constructed, Applicant states, because it has been able to transport the volumes of gas without the construction and operation of the authorized facilities. This has been possible, Applicant states, because Applicant is required to transport a smaller percentage of gas under the authorization granted in opinion No. 743 than was proposed by Applicant's original application, and because the total volume of gas to be transported for the account of NI-Gas Supply, Inc. has been less than predicted at the time of the application.

Applicant further states that it does not now anticipate the need for all the facilities authorized and accordingly requests the certificate issued in docket No. CP73-244 be amended to delete the authorization for the construction and operation of the 3,500-horsepower compressor at station 2118 and additionally requests that the authorization to construct and operate the 1,100-horsepower addition at station 2110 be extended to October 19, 1979.

Any person desiring to be heard or to make any protest with reference to said petition to amend should on or before September 25, 1978, file with the Federal Energy Regulatory Commission, Washington, D.C. 20426, a petition to intervene or a protest in accordance with the requirements of the Commission's rules of practice and procedure (18 CFR 1.8 or 1.10) and the regulations under the Natural Gas Act (18 CFR 157.10). All protests filed with the Commission will be considered by it in determining the appropriate action to be taken but will not serve to make the protestants parties to the proceeding. Any person wishing to become a party to a proceeding or to participate as a party in any hearing therein must file a petition to intervene in accordance with the Commission's rules.

KENNETH F. PLUMB,
Secretary.

[FR Doc. 78-25395 Filed 9-8-78; 8:45 am]

[6740-02]

[Docket No. ER78-515]

MONTANA POWER CO.

Order Accepting Rates for Filing and Suspending Proposed Rate Increase, Granting Waiver, Initiating Hearing, and Establishing Procedures

AUGUST 31, 1978.

On July 28, 1978, the Montana Power Co. (Montana) submitted for filing a proposed increase in its rates for service to Big Horn County Electric Cooperative (Big Horn) and Central Montana Electric Generation & Transmission Cooperative (Central Montana), two wholesale for resale customers. Based on the 12-month test period ending August 31, 1978, the proposed rates would increase revenues by approximately $2.8 million (162 percent).

Public notice of Montana's filing was issued August 8, 1978, with responses due on or before August 18, 1978. On August 28, 1978, Central Montana filed a petition to intervene out of time.

Wholesale service to these two rural cooperative customers is provided by Montana under separate rate schedules [1] that consist of a single demand charge, a two-step energy charge, and monthly minimum bill. These charges are increased by Montana's submittal but the present rate design is retained. There is no fuel clause in either the present or proposed rate schedules.

In its transmittal letter, Montana states that it has negotiated an agreement with Big Horn and Central Montana that the rate increases be filed

[1] See attachment A for rate schedule designations.

with a September 1, 1978, proposed effective date but with a request that the rates be suspended for 3 months until December 1, 1978. Montana states that during this period the cooperatives will have additional time in which to implement a corresponding rate increase with respect to their customers.

Montana further states that it does not have time recording demand meters at the points at which service is provided to Central Montana and Big Horn, and for this reason it is unable to submit actual coincident demand data as required by section 35.13(b) of the Commission's regulations. Montana states that the coincident demand data which it did provide is synthesized, based on actual noncoincident demand data and Bary Curve analysis of 1976 data of another utility, and provides a reasonable approximation of the cooperative's load characteristics. Montana, therefore, has requested that the Commission's requirement with regard to actual coincident demand data be waived.

Review of Montana's filing indicates that the proposed rates have not been shown to be just and reasonable and may be unjust, unreasonable, unduly discriminatory, preferential, or otherwise unlawful. We shall therefore accept Montana's submittal for filing and suspend the proposed rates for 3 months, to become effective December 1, 1978, subject to refund. In so doing, we waive our requirements with regard to coincident demand data for the two cooperatives but do not at this time reach any conclusion as to the merits of the methodology employed by Montana to produce the data. Furthermore, we shall direct Montana to refile its capital structure to reflect the investment tax credit component which is consistent with *Carolina Power & Light Co.*, Opinion No. 19, issued August 2, 1978, where we held that the return allowed on accumulated deferred income tax credits should be measured by the overall rate of return rather than the higher common equity return; and to reflect the Commission's determination on the treatment of account 281.[2]

The Commission orders: (A) Pursuant to the authority contained and subject to the jurisdiction conferred upon the Federal Energy Regulatory Commission by section 402(a) of the Department of Energy act and by the Federal Power Act, particularly sections 205, 206, 301, 308, and 309 thereof, and pursuant to the Commission's rules of practice and procedure and to the regulations under the Federal Power Act (18 CFR Chapter I), a public hearing shall be held concerning the justness and reasonableness of the rate increase proposed by Montana Power Co. in this proceeding.

(B) Within thirty (30) days from the date of this order, Montana shall refile its rates and capital structure responding to the accumulated deferred income tax credit considerations noted above in conformance with Opinion No. 19, *Carolina Power & Light Co.*, and the treatment of account 281 as set forth in the decisions in footnote.

(C) The proposed increased rates and charges filed by the Montana Power Co. on July 28, 1978, are hereby accepted for filing subject to the requirements of paragraph B, supra, and are suspended and the use thereof deferred until December 1, 1978, when they shall become effective, subject to refund.

(D) Waiver of the requirement to file actual coincident demand data in statement M pursuant to § 35.13(b) of the Commission's rules and regulations is hereby granted.

(E) The Federal Energy Regulatory Commission staff shall serve top sheets in this proceeding on or before December 5, 1978.

(F) For good cause shown, central Montana Electric Generation & Transmission Cooperative is hereby permitted to intervene in this proceeding subject to the rules and regulations of the Commission: *Provided, however,* That participation of such intervenor shall be limited to the matters affecting asserted rights and interests specifically set forth in the petition to intervene: *And Provided further,* That the admission of such intervenor shall not be construed as recognition by the Commission that it might be aggrieved by any orders entered in this proceeding.

(G) A presiding administrative law judge to be designated by the Chief Administrative Law Judge for that purpose shall preside at a prehearing conference in this proceeding to be held within (10) days after the serving of the top sheets in a hearing room of the Federal Energy Regulatory Commission, 825 North Capitol Street NE., Washington, D.C. 20426. Said judge is authorized to establish procedural dates and rule upon all motions (except motions to consolidate and sever, and motions to dismiss) as provided for in the Commission's rules of practice and procedure.

(H) The Secretary shall cause prompt publication of this order to be made in the FEDERAL REGISTER.

By the Commission.

KENNETH F. PLUMB,
Secretary.

Attachment A

THE MONTANA POWER CO.

Rate Schedule Designations

Instrument: Schedule REC-78.
Dated: Undated.
Filed: July 28, 1978.

Designation	Description	Supersedes
(1) Supp. No. 8 to Rate Schedule FERC No. 39.	Central Montana G & T Cooperative.	Supp. No. 3 to Rate Schedule FERC No. 39.
(2) Supp. No. 2 to Rate Schedule FERC No. 40.	Big Horn County Cooperative	

[FR Doc. 78-25396 Filed 9-8-78; 8:45 am]

[6740-02]

[Docket No. CP78-492]

MOUNTAIN FUEL SUPPLY CO.

Application

SEPTEMBER 1, 1978.

Take notice that on August 21, 1978, Mountain Fuel Supply Co. (Applicant), 180 East First South Street, P.O. Box 11368, Salt Lake City, Utah 84139, filed in docket No. CP78-492 an application pursuant to section 7(c) of the Natural Gas Act for a certificate of public convenience and necessity authorizing the exchange of natural gas with Northwest Pipeline Corp. (Northwest), all as more fully set forth in the application on file with the Commission and open to public inspection.

Applicant requests authorization to exchange with Northwest volumes of natural gas produced in the Hogback Ridge area of Rich County, Utah, pursuant to the terms of a gas transportation and exchange agreement dated June 1, 1978, between the two companies. It is indicated that Applicant would purchase such gas from American Quasar Petroleum Co. of New Mexico (American Quasar), a small

[2] *Minnesota Power & Light Co.*, Opinion No. 12, issued Apr. 14, 1978; *Carolina Power & Light Co.*, Opinion No. 19, issued Aug. 2, 1978.

producer. The initial price which Applicant would pay for such gas would be determined in accordance with the provisions of opinion No. 770-A issued November 4, 1976, in docket No. RM75-14 and any subsequent amendments thereto, which initial base price is $1.51 per Mcf, it is stated.

The application states that in consideration of the gas transportation and exchange agreement between Applicant and Northwest, Applicant assigned and transferred to Northwest right, title, and interest to 50 percent of the gas purchase contract with America Quasar. Northwest would, therefore, purchase 50 percent of the production directly from the producer, obviating the need for an Applicant tariff relating to this proposal, it is asserted.

It is indicated that Northwest would receive the subject gas at the wellhead and through gathering lines and appurtenant facilities, deliver such gas to a point of interconnection with its existing transmission line in Rich County, Utah. Pursuant to the gas transportation and exchange agreement, Northwest would redeliver 50 percent of the gas to Applicant at the existing Applicant-Northwest delivery point near Green River, Wyo., it is said. Applicant states that it would pay Northwest 3.5 cents per Mcf for gathering and transportation of the subject gas.

Any person desiring to be heard or to make any protest with reference to said application should on or before September 25, 1978, file with the Federal Energy Regulatory Commission, Washington, D.C. 20426, a petition to intervene or a protest in accordance with the requirements of the Commission's rules of practice and procedure (18 CFR 1.8 or 1.10) and the regulations under the Natural Gas Act (18 CFR 157.10). All protests filed with the Commission will be considered by it in determining the appropriate action to be taken but will not serve to make the protestants parties to the proceeding. Any person wishing to become a party to a proceeding or to participate as a party in any hearing therein must file a petition to intervene in accordance with the Commission's rules.

Take further notice that, pursuant to the authority contained in and subject to the jurisdiction conferred upon the Federal Energy Regulatory Commission by sections 7 and 15 of the Natural Gas Act and the Commission's rules of practice and procedure, a hearing will be held without further notice before the Commission on its designee on this application if no petition to intervene is filed within the time required herein, if the Commission on its own review of the matter finds that a grant of the certificate is required by the public convenience and necessity. If a petition for leave to intervene is timely filed, or if the Commission on its own motion believes that a formal hearing is required, further notice of such hearing will be duly given.

Under the procedure herein provided for, unless otherwise advised, it will be unnecessary for Applicant to appear or be represented at the hearing.

KENNETH F. PLUMB,
Secretary.

[FR Doc. 78-25397 Filed 9-8-78; 8:45 am]

[6740-02]

[Docket No. RP71-125 (PGA No. 78-2)]

NATURAL GAS PIPELINE CO. OF AMERICA

Order Accepting for Filing, Suspending, and Setting for Hearing, Proposed Purchased Gas Adjustment Rate Increase

AUGUST 31, 1978.

On July 19, 1978, Natural Gas Pipeline Co. of America (Natural) filed a PGA rate increase of 13.75 cents per Mcf under rate schedules DMQ-1, G-1, E-1, and AOR-1, plus an increase of 14 cents per Mcf under rate schedules WS-1 and WS-2. In addition, the filing eliminates the ENGA surcharge which was added to the currently effective rates for the October 1, 1977, through August 31, 1978, period.

Our review of the filing indicates that the PGA includes two purchases from Oklahoma Natural Gas Co. at rates in excess of the appropriate nationwide rates. There is insufficient evidence for the Commission to find that the prices paid for these "emergency" purchases were at rates a prudent pipeline would have paid under similar circumstances. We will suspend the effectiveness of the filing one day until September 2, 1978, at which time the filing may be made effective subject to refund, provided that the proposed rate is modified to reflect a subsequent reduction in the rates of Natural's supplier, United Gas Pipeline Co., as approved by letter order dated August 10, 1978, in docket No. RP72-133. We will also set for hearing the question of the prudence of these purchases.

Public notice of Natural's filing was issued on July 27, 1978, with protests and petitions to intervene due on or before August 18, 1978.

The Commission orders: (A) The effectiveness of the Substitute Thirty-Fourth Revised Sheet No. 5 to Natural's FERC Gas Tariff, Third Revised Volume No. 1 is hereby suspended for 1 day, until September 2, 1978, at which time it may be made effective subject to refund, provided that the PGA rate reflects the reduction in the pipeline supplier rates charged by United Gas Pipe Line Co., as approved by letter order dated August 10, 1978, in docket No. RP72-133.

(B) Natural's case-in-chief in support of the prudence of the above-referenced purchases shall be filed with this Commission no later than October 2, 1978.

(C) Staff's statement of position shall be filed on or before November 1, 1978.

(D) A presiding administrative law judge to be designated by the Chief Administrative Law Judge (18 CFR 3.5(d)) shall convene a settlement conference in this proceeding to be held within 10 days after the service of Staff's statement of position in a hearing room of the Federal Energy Regulatory Commission, 825 North Capitol Street NE., Washington, D.C. 20426. The presiding administrative law judge is authorized to establish such further procedural dates as may be necessary and to rule on all motions (except motions to sever, consolidate or dismiss) as provided for in the rules of practice and procedure.

(E) The Secretary shall cause prompt publication of this order in the FEDERAL REGISTER.

By the Commission.

KENNETH F. PLUMB,
Secretary.

[FR Doc. 78-25338 Filed 9-8-78; 8:45 am]

[6740-02]

[Docket No. ER78-580]

NORTHERN STATES POWER

Filing

AUGUST 31, 1978.

Take notice that Northern States Power Co. (Company) on August 22, 1978, tendered for filing Schedule A-1, Firm Power Service, Transmission Voltage for the City of Kenyon, proposed to be effective October 8, 1978.

Any person desiring to be heard or to protest said filing should file a petition to intervene or protest with the Federal Energy Regulatory Commission, 825 North Capitol Street NE., Washington, D.C. 20426, in accordance with sections 1.8 and 1.10 of the Commission's rules of practice and procedure (18 CFR 1.8 and 1.10). All such petitions or protests should be filed on or before September 11, 1978. Protests will be considered by the Commission in determining the appropriate action to be taken, but will not serve to make protestants parties to the proceeding. Any person wishing to become a party must file a petition to intervene. Copies of this filing are on file with

the Commission and are available for public inspection.

KENNETH F. PLUMB,
Secretary.

[FR Doc. 78-25399 Filed 9-8-78; 8:45 am]

[6740-02]

[Docket No. OR78-10]

PACTEX PIPELINE CO.

Petition for Declaratory Order

SEPTEMBER 1, 1978.

Take notice that on August 14, 1978, supplemented August 17, 1978, Pactex Pipeline Co. (Pactex), 1725 Midland Building, Cleveland, Ohio 44115 filed in docket No. OR78-10 a petition pursuant to section 554 of the Administrative Procedure Act (5 U.S.C. 554(e)) and the Interstate Commerce Commission's rules of practice and procedure (49 CFR Part 1100) requesting that the Commission issue an order declaring that certain expenditures will be included in petitioner's cost of service when petitioner's facilities are placed in service.

Pactex states that it is a wholly-owned subsidiary of the Standard Oil Co., an Ohio corporation (Sohio) which was organized for the purpose of constructing and operating a crude oil pipeline running approximately 1,033 miles from Long Beach, Calif. to Midland, Tex. Principal access to the pipeline will be through a new two-berth marine terminal to be constructed in the port of Long Beach. Pactex states that the proposed marine oil terminal and tankerage at Long Beach will result in pollution of the ambient air through the emission of hydrocarbon vapors, sulfur oxides, nitrogen oxides and particulate matter to the atmosphere. Pactex further states that under applicable federal and state laws and regulations governing air quality in the South Coast Air Basin of California, the requirements for the construction and operation of the marine terminal include the ameliorization by Pactex of existing sources of air pollution within such air basin.

Pactex recites that since it currently has no operations in the South Coast Air Basin, it proposes to satisfy the amelioration requirements by installing pollution control equipment on another party's facilities, namely Southern California Edison Co.'s Alamitos electric generating station. In order to reduce emissions to the atmosphere of particulate matter, sulfur dioxide, and various oxides of nitrogen, Pactex proposes to construct and install certain pollution control facilities, consisting of a scrubber system and an emission control system. Pactex states that pursuant to an arrangement to be entered between Pactex and Edison, Pactex will be responsible for all costs associated with acquisition, construction and installation of the proposed pollution control facilities, together with all the expenses of operating and maintaining such facilities. Pactex states that the manner in which these costs will be treated by the Commission for ratemaking purposes will have a significant impact on the economics of the entire pipeline project and that it desires to confirm, prior to proceeding with the project, that the Commission will allow Pactex or its successors to recover the expenditures for this purpose by including the cost of such facilities in the project rate base and the expenses of operating and maintaining such facilities as operating and maintenance expenses for ratemaking purposes.

Any person desiring to be heard or to make any protest with reference to said petition should on or before September 14, 1978, file with the Federal Energy Regulatory Commission, 825 North Capitol Street NE., Washington, D.C. 20426, a petition to intervene or a protest in accordance with the requirements of the Commission's rules of practice and procedure applicable in this proceeding (49 CFR Part 1100). All protests filed with the Commission will be considered by it in determining the appropriate action to be taken but will not serve to make the protestants parties to the proceeding.

KENNETH F. PLUMB,
Secretary.

[FR Doc. 78-25400 Filed 9-8-78; 8:45 am]

[6740-02]

[Docket No. ER78-517]

CONNECTICUT LIGHT & POWER CO.

Order Accepting for Filing, Suspending Proposed Rate Increase, Granting Intervention, Denying Request for Phased Hearing, Providing for Hearing and Establishing Procedures

ISSUED AUGUST 31, 1978.

On July 31, 1978, the Connecticut Light & Power Co. (CL&P) tendered for filing a proposed rate increase of $2,389,650 (6.7 percent) for the 12-month period succeeding the proposed effective date of September 1, 1978. The proposed increase is applicable to CL&P's seven wholesale customers[1] under its FPC Electric Tariff 1st Revised Volume No. 1.[2]

The Company states that the proposed rate schedule or the "R-4 Rate"[3] consists of increased energy and demand charges, elimination of separate facilities and power factor adjustment charges,[4] and reduction of the late payment charge to 9 percent per annum. CL&P also proposes to change its fuel adjustment clause to synchronize revenues with fuel costs in the month of service and thereby eliminate the 1-month difference between the fuel costs experienced by the Company and the fuel adjustment clause charges under the R-3 rate. Notice of the filing was issued on August 11, 1978, with protests and petitions to intervene due on or before August 21, 1978.

On August 21, 1978, the Connecticut Municipal Group[5] (Petitioner) filed a protest and petition to intervene. The Petitioner consists of municipal wholesale customers of CL&P which will be directly affected by the rate changes proposed herein. Therefore, we shall grant the Petitioner intervenor status.

Petitioner moves for an expedited phased hearing on the issue of rate design. It asserts that rate design has been the subject of extensive evidentiary proceedings in the R-1 and R-3 rate cases involving these parties and that the instant filing is an attempt by CL&P to improperly perpetuate its restrictive rate design despite the previous adjudicatory procedures. Petitioner also requests a 5-month suspension of the instant filing based on alleged improper costing procedures that result in inflated cost support for the rates herein proposed.[6] In addition, Petitioner raises price squeeze issues and makes certain allegations concerning price discrimination and the anticompetitive effect of the proposed rates.[7]

Our review of the filing and the pleadings indicates that the proposed rates have not been shown to be just

[1] City of Norwich; Borough of Jewett City; city of Norwalk, second taxing district; city of Norwalk, third taxing district; town of Wallingford; city of Groton, and Bozrah Light & Power Co.

[2] See attachment A for rate schedule designations.

[3] The "R-4 Rate" which is denominated as "FERC Electric Tariff Resale Service Rate R-4" is proposed to amend the Company's "FPC Electric Tariff Resale Service Rate R-3" under which the Company presently provides firm service to the affected seven wholesale customers.

[4] The Company indicates that recovery of these costs will be made through increased demand charges.

[5] City of Groton, Borough of Jewett City, city of Norwich, second and third taxing districts of Norwalk, and town of Wallingford, Conn.

[6] Petitioner raises the following cost of service issues: use of the average of beginning and end of the test rate base; depreciation expenses related to decommissioning costs of nuclear units; deferred tax reserve—accelerated amortization; amortization of power costs for Millstone Unit No. 1; income taxes; investment in retired units; cost allocation; cost of "excess capacity"; and 14.5 percent rate of return on common equity.

[7] An answer in opposition to Petitioners' request for a phased hearing, a 5-month suspension period and a price squeeze proceeding was filed by CL&P on August 25, 1978.

and reasonable and may be unjust, unreasonable, unduly discriminatory, preferential, or otherwise unlawful. Consequently, we will suspend the proposed rates for 5 months and establish procedures for an evidentiary hearing on the issues, including price squeeze, involved in this filing. We will, however deny Petitioners' request for a phased expedited hearing. The issue of CL&P's stratified rate design is involved in the docket No. ER76-320 proceeding, which is awaiting initial decision by the Presiding Judge. Accordingly, we believe that the expedition of this issue will not be enhanced through the requested phased proceeding.

We also note that CL&P's case-in-chief included an assignment of a portion of EPRI costs to the resale customers and a failure to reduce rate base by the amount of accumulated provision for deferred Federal income taxes recorded in account 281. The latter procedure is in conflict with several prior FERC decisions.[8] As to EPRI, in *Carolina Power & Light Co.*, opinion No. 19, FERC affirmed the presiding judge's initial decision on this issue removing allocated EPRI contributions from the wholesale customers' cost of service. We note that contributions to EPRI are voluntary, that they are made on the basis of retail sales, and that many wholesale customers similarly make contributions on the basis of their retail sales. Accordingly, we shall grant summary disposition on this issue as well. We would have required CL&P to refile rates to reflect those modifications. However, in this case, we note that the cost of refiling would be too great when compared to benefits to the consumers from the consequent rate reduction. In the future, each utility is expected to file its cost support in accordance with the determination herein on these issues.

The Commission finds: It is necessary and proper and in the public interest to accept for filing CL&P's proposed rate filing, suspend, and defer the use thereof, all as hereinafter ordered, and that an evidentiary hearing be held in the docket herein in order for the Commission to discharge its responsibilities under section-205 of the Federal Power Act.

The Commission orders: (A) Pursuant to the authority contained in and subject to the jurisdiction conferred upon the Federal Energy Regulatory Commission by section 402(a) of the Department of Energy Act and by the Federal Power Act, particularly sections 205, 206, 301, 307, 308, and 309 thereof, and pursuant to the Commission's rules of practice and procedure and to the regulations under the Federal Power Act (18 CFR Chapter I), a public hearing shall be held concerning the justness and reasonableness of the rate increase proposed by Connecticut Light & Power Co. in this proceeding.

(B) Pending such hearing and decision thereon, the proposed increased rates and charges filed by CL&P on July 31, 1978, are hereby accepted for filing, suspended and the use thereof deferred until February 1, 1979, when they shall become effective, subject to refund.

(C) The Federal Energy Regulatory Commission staff shall serve top sheets in this proceeding on or before January 5, 1979.

(D) A presiding administrative law judge to be designated by the Chief Administrative Law Judge for that purpose shall preside at a prehearing conference in this proceeding to be held within ten (10) days after the serving of top sheets in a hearing room of the Federal Energy Regulatory Commission, 825 North Capitol Street NE., Washington, D.C. 20426.

(E) Petitioner is permitted to intervene in this proceeding subject to the rules and regulations of the Commission; *Provided, however,* that participation by this intervenor shall be limited to matters set forth in its petition to intervene; and *Provided, further,* that the admission of this intervenor shall not be construed as recognition by the Commission that it might be aggrieved because of any order or orders of the Commission entered in this proceeding.

(F) An administrative law judge shall convene a prehearing conference within 15 days from the date of this order for the purpose of hearing intervenor's request for data required to present its case, including prima facie showings, on the price-squeeze issues it raises. Said law judge is authorized to estalish all procedural dates and to rule upon all motions (except motions to consolidate and sever and motions to dismiss), as provided for in the Commission's rules of practice and procedure.

(G) Petitioners' request for an expedited, phased hearing on the issue of rate design is hereby denied.

(H) The Secretary shall cause prompt publication of this order to be made in the FEDERAL REGISTER.

By the Commission.

KENNETH F. PLUMB,
Secretary.

ATTACHMENT A—THE CONNECTICUT LIGHT & POWER CO., DOCKET NO. ER78 517

Dated: Undated.
Filed: July 31, 1978.

FPC Electric Tariff 1st Revised Volume No. 1

Designation	Supersedes Sheet No.
2d revised sheet No. 1	1st revised sheet No. 1.
1st revised sheet No. 2	Original sheet No. 2.
2d revised sheet No. 3	1st revised sheet No. 3.
2d revised sheet No. 4	1st revised sheet No. 4.
1st revised sheet No. 5	Original sheet No. 5.
2d revised sheet No. 6	1st revised sheet No. 6.
1st revised sheet No. 7	Original sheet No. 7.
2d revised sheet No. 8	1st revised sheet No. 8.
1st revised sheet No. 9	Original sheet No. 9.
2d revised sheet No. 10	1st revised sheet No. 10.
3d revised sheet No. 11	2d revised sheet No. 11.
1st revised sheet No. 11A	Original sheet No. 11A.
2d revised sheet No. 12	1st revised sheet No. 12.
2d revised sheet No. 13	1st revised sheet No. 13.
1st revised sheet No. 14	Original sheet No. 14.
1st revised sheet No. 15	Original sheet No. 15.
1st revised sheet No. 16	Original sheet No. 16.
2d revised sheet No. 17	1st revised sheet No. 17.
1st revised sheet No. 18	Original sheet No. 18.
1st revised sheet No. 19	Original sheet No. 19.
1st revised sheet No. 20	Original sheet No. 20.
1st revised sheet No. 21	Original sheet No. 21.
2d revised sheet No. 22	1st revised sheet No. 22.
2d revised sheet No. 23	1st revised sheet No. 23.
1st revised sheet No. 24	Original sheet No. 24.
1st revised sheet No. 25	Original sheet No. 25.
1st revised sheet No. 26	Original sheet No. 26.
1st revised and original sheets Nos. 27-36.	Deleted.

[FR Doc. 78-25403 Filed 9-8-78; 8:45 am]

[6740-02]

[Docket No. ER78-522]

Virginia Electric & Power Co.

Order Accepting Rates for Filing, Suspending Proposed Rate Increase, Allowing Intervention, Providing for Hearing, Establishing Price-Squeeze Procedures, Denying Motion To Reject, and Granting Motion for Summary Judgment in Part

ISSUED AUGUST 30, 1978.

On July 31, 1978, Virginia Electric & Power Co. (VEPCO) submitted for filing proposed rate increases to its Cooperative and Municipal customers.[1] The proposed rates would increase revenues by $28,788,246, or 19.86 percent, based on a test period of 12 months ending June 30, 1979. VEPCO requests an effective date of August 31, 1978.

Notice of the filing was issued on August 4, 1978, with protests and petitions to intervene due on or before August 18, 1978. On August 14, 1978, a petition to intervene was filed on behalf of Old Dominion Electric Cooperative, Northern Neck Electric Cooperative, North Carolina Electric Membership Corp. and Roanoke Electric Membership Corp. (hereinafter referred to as "Cooperatives"). On August 17, 1978, ElectriCities of North Carolina (ElectriCities) filed a protest, petition to intervene, motion to reject or in the alternative, motion for summary judgment, and request for hearing and maximum suspension. On August 25, 1978, VEPCO filed an answer in opposition to the motion to suspend of Cooperatives and an

[8] *Minnesota Power & Light Company*, opinion No. 12, issued April 14, 1978; *Carolina Power & Light Company*, opinion No. 19, issued August 2, 1978.

[1] See appendix for rate schedule designations.

answer in opposition to motion to reject, motion for summary judgment and request for maximum suspension of ElectriCities.

In addition to their request for party status in this proceeding, Cooperatives raise a number of objections to VEPCO's filing:

(1) The inclusion of "abandonment cost" associated with the recently cancelled Surry 3 and 4 nuclear units in the proposed rates.

(2) VEPCO's proposed 14 percent return on common equity capital.

(3) Inclusion of book equity for the accumulated job development investment tax credit in the cost of capital calculations.

(4) The inclusion of "certain estimated nuclear fuel costs" as current expenses in its cost of service.

(5) VEPCO's increase of its depreciation rates in period II test period over the depreciation rates of period I test period.

Cooperatives also raise allegations of anticompetitive conduct of VEPCO, particularly in regard to its activities concerning Old Dominion Electric Cooperative stemming from the late 1940's. Cooperatives additionally allege that VEPCO has opposed efforts by Cooperatives to become self-sufficient in generation and has opposed access by Cooperatives and Municipals to joint ownership of nuclear plants.

As a remedy for VEPCO's alleged anticompetitive conduct, Cooperatives request the Commission to affix a level of return below that level to which VEPCO might otherwise be entitled. Cooperatives also request that the rates be suspended for the full 5 month period.

Cooperatives' petition also reserves the right to raise other issues in their testimony and at hearing.

ElectriCities move for rejection of the filing on the grounds that (1) VEPCO's proposed period II change in depreciation rates is not supported and (2) VEPCO has included the costs of its recently cancelled Surry Nuclear units 3 and 4 in its cost of service.[2] Since our review has determined that VEPCO has substantially complied with the Commission's filing requirements, we shall deny ElectriCities' motion. *Municipal Light Boards* v. *F.P.C.* 450 F.2d 1341, 1346 (D.C. Cir. 1971). However, ElectriCities may raise these allegations in the course of the hearing procedures which we shall hereinafter order.

ElectriCities move for summary judgment on two other aspects of VEPCO's rate filing: (a) Inclusion of accumulated job development deferred investment tax credit in its common equity component of its capital structure[3] and (b) failure to deduct all non-investor supplied funds related to rate base expenditures from rate base.

We find that ElectriCities' argument concerning Investment Tax Credit is correct. The Commission, in Opinion No. 19, *Carolina Power & Light Co.*, issued August 2, 1978,[4] held that "the return allowed on ADITC should be measured by the overall rate of return rather than the higher common equity return" (mimeo, page 7). Therefore, we shall direct VEPCO to refile its capital structure to reflect the invest tax credit component which is consistent with the *Carolina Power & Light* Opinion.

The other contention by ElectriCities, that certain other items should be deducted from VEPCO's proposed rate base, is better left to the presiding judge for resolution after hearing.

ElectriCities also object to VEPCO's proposed rate of return on equity; its tax normalization method; its cash working capital allowance; its allegedly inflated future test year projections; its changes in nuclear fuel accounting; its treatment of Surry 3 and 4 cancellation costs; its inclusion of North Anna Nuclear Unit 2 as a cost on the assumption that its commercial opeation will commence in March 1979; its allegedly discriminatory disparity in high voltage discouts between its Municipal and Cooperative customers. These are all issues which ElectriCities may raise in the course of a hearing which we shall hereinafter order.

ElectriCities also raise a *Conway*[5] price-squeeze issue in their petition. To conform with FPC Order No. 563, additional procedures must be set so as to effectuate the policy announced in that order. We shall direct the presiding judge to convene a prehearing conference within 15 days from the date of this order for the purpose of hearing ElectriCities' request for data necessary to present their prima facie showing on the price squeeze issue.

Our review indicates that the proposed rates have not been shown to be just and reasonable and may be unjust, unreasonable, unduly discriminatory, preferential or otherwise unlawful. The Commission shall accept the submittal for filing and suspend the proposed rates for one month from the proposed effective date after which the rates and services will go into effect as of September 30, 1978, subject to refund.

Cooperatives and ElectriCities shall be entitled to intervene in this docket and may raise at hearing all of the issues alleged in their petition to intervene, including additional cost of service issues which Cooperatives have reserved the right to raise after more thorough review of the filing.

The Commission finds: It is necessary and proper in the public interest and as an aid in the enforcement of the Federal Power Act that the Commission enter upon a hearing concerning the lawfulness of the proposed rate increase submitted for filing by VEPCO, establish procedures for that hearing, and that the proposed rate increase be accepted for filing, suspended, and the use thereof deferred, all as hereinafter ordered.

The Commission orders: (a) Pursuant to the authority contained in and subject to the jurisdiction conferred upon the Federal Energy Regulatory Commission by Section 402(a) of the Department of Energy Act and by the Federal Power Act, particularly Sections 205, 206, 301, 303 and 309 thereof, and pursuant to the Commission's rules of practice and procedure and to the regulations under the Federal Power Act (18 CFR Chapter I), a public hearing shall be held concerning the justness and reasonableness of the rate increase proposed by VEPCO in this docket.

(B) Pending the hearing and decision thereon, the proposed increased rates and charges filed by VEPCO on July 31, 1978, are hereby accepted for filing, suspended and the use thereof deferred until September 30, 1978, when they shall become effective, subject to refund.

(C) The Federal Energy Regulatory Commission Staff shall serve top sheets in this proceeding on or before January 5, 1979.

(D) A presiding administrative law judge to be designated by the Chief Administrative Law Judge for that purpose shall preside at a prehearing conference in this proceeding to be held within 10 days of the issuance of top sheets, in a hearing room of the Federal Energy Regulatory Commission, 825 North Capitol Street NE., Washington, D.C. 20426. The judge is authorized to establish procedural dates and to rule upon all motions (except motions to consolidate and sever, and motions to dismiss) as provided for in the Commission's rules of practice and procedure.

(E) Cooperatives and ElectriCities are hereby permitted to intervene in this proceeding subject to the rules and regulations of the Commission; Provided, however, that participation by such intervenors shall be limited to matters set forth in their petition to intervene; and Provided, further, that the admission of such intervenors shall not be construed as recognition by the Commission that they might be aggrieved because of any order or

[2] Cooperatives also raised these issues in their petition.

[3] Cooperatives also raised this issue in their petition.

[4] The Opinion was issued 3 days after VEPCO's filing.

[5] *F.P.C.* v. *Conway Corp.*, 426 U.S. 271 (1976), affirming 510 F.2d 1264 (D.C. Cir. 1975).

orders of the Commission entered in this proceeding.

(F) The presiding judge shall convene a prehearing conference within 15 days of the date of this order, in a hearing room of the Federal Energy Regulatory Commission, 825 North Capitol Street NE., Washington, D.C. 20426, for the purpose of hearing petitioners' request for data required to present their case, including a prima facie showing, on the price squeeze issue. VEPCO shall be required to respond to the discovery requests authorized by the administrative law judge within 30 days, and the petitioners shall file their case-in-chief on the price squeeze issue within 30 days after the company's response.

(G) ElectriCities' motion to reject the filing is hereby denied.

(H) ElectriCities' motion for summary judgment with respect to the investment tax credit is hereby granted. VEPCO is directed to refile its capital structure to be consistent with the Commission's treatment of investment tax credit in Opinion No. 19, *Carolina Power & Light Co.*, within 30 days of the issuance of this order.

(I) The Secretary shall cause prompt publication of this order to be made in the FEDERAL REGISTER.

By the Commission.

KENNETH F. PLUMB,
Secretary.

VIRGINIA ELECTRIC AND POWER CO.

Rate Schedule Designations Docket No. ER78-522

Filing date: July 31, 1978.
Other parties: Wholesale customers, as indicated.
Index code and description: (General Rate Increase.) (1)O(B)-Schedule RC, Resale Service, Rural Electric Cooperatives (including Fuel Adjustment Clause). (2)O(B)-Schedule RC-F, Excess Facilities Service, Rural Electric Cooperatives.

Other party	Rate schedule	Supplement designations
B-A-R-C Electric Cooperative	FPC No. 76	(1) Supp. No. 25 (supersedes Supp. No. 23). (2) Supp. No. 26 (supersedes Supp. No. 24).
Community Electric Cooperative	FPC No. 77	(1) Supp. No. 38 (supersedes Supp. No. 38). (2) Supp. No. 39 (supersedes Supp. No. 37).
Craig-Botetourt Electric Cooperative	FPC No. 78	(1) Supp. No. 22 (supersedes Supp. No. 19). (2) Supp. No. 23 (supersedes Supp. No. 20).
Mecklenberg Electric Cooperative	FPC No. 79	(1) Supp. No. 47 (supersedes Supp. No. 45). (2) Supp. No. 48 (supersedes Supp. No. 46).
Northern Neck Electric Cooperative	FPC No. 80	(1) Supp. No. 30 (supersedes Supp. No. 27). (2) Supp. No. 31 (supersedes Supp. No. 28).
Northern Piedmont Electric Cooperative.	FPC No. 81	(1) Supp. No. 33 (supersedes Supp. No. 30). (2) Supp. No. 34 (supersedes Supp. No. 31).
Prince George Electric Cooperative	FPC No. 82	(1) Supp. No. 26 (supersedes Supp. No. 24). (2) Supp. No. 27 (supersedes Supp. No. 25).
Prince William Electric Cooperative	FPC No. 83	(1) Supp. No. 41 (supersedes Supp. No. 35). (2) Supp. No. 42 (supersedes Supp. No. 36).
Shenandoah Valley Electric Cooperative.	FPC No. 84	(1) Supp. No. 45 (supersedes Supp. No. 42). (2) Supp. No. 46 (supersedes Supp. No. 43).
Southside Electric Cooperative	FPC No. 85	(1) Supp. No. 53 (supersedes Supp. No. 51). (2) Supp. No. 54 (supersedes Supp. No. 52).
Tri-County Electric Cooperative	FPC No. 86	(1) Supp. No. 28 (supersedes Supp. No. 26). (2) Supp. No. 29 (supersedes Supp. No. 27).
Virginia Electric Cooperative	FPC No. 87	(1) Supp. No. 30 (supersedes Supp. No. 28). (2) Supp. No. 31 (supersedes Supp. No. 29).
Albemarle Electric Membership Corp.	FPC No. 88	(1) Supp. No. 25 (supersedes Supp. No. 23). (2) Supp. No. 26 (supersedes Supp. No. 24).
Cape Hatteras Electric Membership Corp.	FPC No. 89	(1) Supp. No. 13 (supersedes Supp. No. 11). (2) Supp. No. 14 (supersedes Supp. No. 12).
Edgecomb-Martin County Electric Membership Corp.	FPC No. 90	(1) Supp. No. 30 (supersedes Supp. No. 27). (2) Supp. No. 31 (supersedes Supp. No. 28).
Halifax Electric Membership Corp.	FPC No. 91	(1) Supp. No. 22 (supersedes Supp. No. 20). (2) Supp. No. 23 (supersedes Supp. No. 21).
Roanoke Electric Membership Corp.	FPC No. 92	(1) Supp. No. 34 (supersedes Supp. No. 32). (2) Supp. No. 35 (supersedes Supp. No. 33).
Tideland Electric Membership Corp.	FPC No. 93	(1) Supp. No. 19 (supersedes Supp. No. 17). (2) Supp. No. 20 (supersedes Supp. No. 18).
Central Virginia Electric Cooperative	FPC No. 94	(1) Supp. No. 34 (supersedes Supp. No. 31). (2) Supp. No. 35 (supersedes Supp. No. 32).

ATTACHMENT A

VIRGINIA ELECTRIC & POWER CO., DESIGNATION OF FPC ELECTRIC TARIFF REVISIONS, DOCKET NO. ER78-522

Filing Date: July 31, 1978.

Other Parties: Tariff Customers, as indicated.

Index Code and Description: (General Rate Increase) O(B). FPC Electric Tariff, First Revised Volume No. 1 2d Revised Sheets Nos. 4 through 10, and 17.

Sheets 4 through 10. Scheduled RS, Resale Service to Municipalities and Private Utilities, including Fuel Adjustment Clause.

Sheet 17. Service Facilities.

Applicable to:

Town of Belhaven, N.C.
Town of Blackstone, Va.
Town of Culpepper, Va.
Town of Edenton, N.C.
City of Elizabeth City, N.C.
Town of Elkton, Va.
Town of Enfield, N.C.
City of Franklin, Va.
Greenville Utilities Commission, N.C.
Town of Hamilton, N.C.
Harrisburh Electric Commission, Va.
Town of Hertford, N.C.
Town of Hobgood, N.C.
Town of Iron Gate, Va.
City of Manassas, Va.
Town of Robersonville, N.C.
Town of Scotland Neck, N.C.
Town of Tarboro, N.C.
Town of Wakefield, Va.
City of Washington, N.C.
Town of Windsor, N.C.

[FR Doc. 78-25409 Filed 9-8-78; 8:45 am]

[6740-02]

[Docket Nos. AR64-2 et al.; G-18841, RP70-29, RP72-98; AR67-1 et al.; G-18841, RP66-59, RP69-13, RP70-29]

AREA RATE PROCEEDING ET AL. (TEXAS GULF COAST AREA), TEXAS EASTERN TRANSMISSION CORP., AND AREA RATE PROCEEDING ET AL. (OTHER SOUTHWEST AREA)

Proposed Plans of Refund

SEPTEMBER 1, 1978.

Take notice that Texas Eastern Transmission Corp., on July 29, 1978, tendered for filing its proposed plans of refund to flow through moneys received from producers pursuant to opinion Nos. 595 and 595-A and opinion Nos. 607 and 607-A. Such plans of refund are being filed in accordance with the Commission's order directing disbursement and flow through of refunds issued on February 23, 1976, as amended March 25, 1976, in docket Nos. AR64-2 et al. and docket Nos. AR67-1 et al.

Texas Eastern proposes to flow through to its customers the jurisdictional portion of the refunds received from producers pursuant to opinion Nos. 595 and 595-A totaling $959,395.62, including interest, and the jurisdictional portion of the refunds received pursuant to opinion Nos. 607 and 607-A totaling $27,928.94, including interest, by crediting the balance of its gas cost adjustment account by such amounts as provided for in section 23.8 of the general terms and con-

ditions of its FPC Gas Tariff, Fourth Revised Volume No. 1.

Copies of the filing were served upon the company's jurisdictional customers and interested State commissions.

Any person desiring to be heard or to protest said filing should file a petition to intervene or protest with the Federal Energy Regulatory Commission, 825 North Capitol Stree NE., Washington, D.C. 20426, in accordance with sections 1.8 and 1.10 of the Commission's rules of practice and procedure (18 CFR 1.8, 1.10). All such petitions or protests should be filed on or before September 22, 1978. Protests will be considered by the Commission in determining the appropriate action to be taken, but will not serve to make protestants parties to the proceeding. Any person wishing to become a party must file a petition to intervene. Copies of this filing are on file with the Commission and are available for public inspection.

KENNETH F. PLUMB,
Secretary.

[FR Doc. 78-25410 Filed 9-8-78; 8:45 am]

[6740-02]

[Docket No. ER78-516]

BOSTON EDISON CO.

Order Accepting for Filing and Suspending Proposed Rate Increase, Denying Motion, Granting Intervention, and Establishing Procedures

AUGUST 31, 1978.

On July 28, 1978, Boston Edison Co. (Boston Edison) tendered for filing a rate schedule revision[1] which would increase its monthly fee for subtransmission service to New England Power Co. (NEP) for NEP's Quincy-Weymouth service area. The proposed change would increase this monthly charge from $92,786 to $129,959, thus representing a revenue increase of $446,076 for the 12-month period succeeding the proposed effective date of September 1, 1978.[2]

While NEP supplies its Quincy-Weymouth load from its own generating sources, that service area is physically isolated from NEP's power supply transmission system. Therefore, Boston Edison provides the necessary transmission and subtransmission service. The presently effective rate for subtransmission service consists of a fixed monthly charge as does the proposed rate.[3] Boston Edison states that the purpose of this flat fee arrangement is to eliminate the need to redesign the rate if NEP subsequently chooses to transfer portions of the Quincy-Weymouth load from low to high voltage service or vice versa.

On August 14, 1978, NEP submitted a petition to intervene, protest, motion to reject or, alternatively, suspend filing for full statutory period.[4] In its filing, NEP states that the proposed rate increase constitutes more than a 40-percent annual increase in the cost of Boston Edison's subtransmission service to NEP. Thus, NEP asserts a substantial interest in the outcome of this proceeding and contends that its interests are not adequately represented by any other party.

In moving to reject Boston Edison's filing, NEP states its belief that Boston Edison has relied upon an inflated rate base to support its proposed rate increase. According to NEP, the rate base utilized by Boston Edison in the instant filing includes approximately $2,700,000 in "unexplained" increases in gross plant investment when compared to 1973 cost data filed by Boston Edison in support of the currently effective subtransmission charge. NEP arrives at the $2,700,000 figure by subtracting $3,800,000 (the amount of gross plant investment which NEP contends was reflected in the 1973 data submitted by Boston Edison to support the existing rate as filed in docket No. E-9037) from $6,500,000 (the approximate total attributable to gross plant investment in Boston Edison's cost support for the presently proposed rate increase). NEP purports to be unaware of additional gross plant investment of such magnitude.

On August 23, 1978, Boston Edison filed an answer to NEP's petition and protest. While Boston Edison does not oppose NEP's request to intervene in this proceeding, it does dispute the rationale underlying NEP's motion to reject the tendered rate filing or to suspend its effectiveness for 5 months. Boston Edison contends that the gross plant investment identified in its 1973 cost of service was actually $6,126,868, rather than $3,800,000, as suggested by NEP. Furthermore, Boston Edison maintains that it is unable to ascertain the manner in which NEP might have calculated the $3,800,000 gross plant figure. Boston Edison thus concludes that NEP is mistaken as to the extent of Boston Edison's recent additions to gross plant. It appears that this rate base issue would be resolved most appropriately on the basis of a full evidentiary record to be developed in a hearing which we will herein order to be convened. Therefore, we will deny NEP's motion to reject the present submittal.

Our review of Boston Edison's filing indicates that the proposed subtransmission charge has not been shown to be just and reasonable and may be unjust, unreasonable, unduly discriminatory, preferential, or otherwise unlawful. Accordingly, we will accept the proposed rate for filing, suspend it for 2 months to become effective November 1, 1978, subject to refund, and establish hearing procedures to determine the lawfulness of the rate schedule revision. Additionally, having determined that participation in this proceeding by NEP may be in the public interest, we will grant NEP intervenor status.

The Commission orders: (A) Pursuant to the authority contained in and subject to the jurisdiction conferred upon the Federal Energy Regulatory Commission by section 402(a) of the Department of Energy Act and by the Federal Power Act, particularly sections 205, 206, 301, 308, and 309 thereof, and pursuant to the Commission's rules of practice and procedure and to the regulations under the Federal Power Act (18 CFR, Chapter I), a public hearing shall be held concerning the justness and reasonableness of the rate increase proposed by Boston Edison in this proceeding.

(B) Pending such hearing and decision thereon, the proposed increased rate filed by Boston Edison on July 28, 1978, is hereby accepted for filing, suspended, and the use thereof deferred until November 1, 1978, when it shall become effective, subject to refund.

(C) NEP's motion to reject Boston Edison's filing is hereby denied.

(D) The staff shall prepare and serve top sheets on all parties to this proceeding on or before December 1, 1978.

(E) A presiding administrative law judge to be designated by the Chief Administrative Law Judge for that purpose (see, Delegation of Authority, 18 CFR 3.5(d)), shall convene a prehearing conference in this proceeding to be held within fifteen (15) days after service of staff top sheets, in a hearing room of the Federal Energy Regulatory Commission, 825 North Capitol Street NE., Washington, D.C. 20426. Said law judge is authorized to

---

[1] Designated as: Boston Edison Co., First Revised Sheet No. 2 to Rate Schedule FPC No. 46 (supersedes Original Sheet No. 2).

[2] The proposed subtransmission charge is based on a test period consisting of the 12 months ended Dec. 31, 1977.

[3] Pursuant to an agreement dated Nov. 1, 1972, Boston Edison provides transmission service for approximately one-half of the Quincy-Weymouth load from its 115-kV transmission facilities. The remainder of the load is served by Boston Edison's 14/24-kV facilities. The existing rate for subtransmission service, designated as supplement No. 3 to rate schedule FPC No. 46, was submitted for filing by Boston Edison on September 23, 1974, in docket No. E-9037. That rate became effective, subject to refund, on Nov. 2, 1974, but the refund obligation was later terminated and the rate remained in effect as filed, in accordance with a settlement agreement approved by the Federal Power Commission by order of Nov. 6, 1975.

[4] Public notice of Boston Edison's rate increase filing was issued on Aug. 4, 1978, with protests or petitions to intervene due on or before Aug. 18, 1978.

establish all procedural dates and to rule upon all motions (except motions to consolidate and sever, and motions to dismiss), as provided for in the Commission's rules of practice and procedure.

(F) NEP is hereby permitted to intervene in this proceeding, subject to the rules and regulations of the Commssion: *Provided, however,* That participation of such intervenor shall be limited to matters set forth in the petition to intervene: and *provided further,* That the admission of such intervenor shall not be construed as recognition by the Commission that it might be aggrieved because of any order or orders of the Commission entered in this proceeding.

(G) Nothing contained herein shall be construed as limiting the rights of the parties to this proceeding regarding the convening of conferences or offers of settlement pursuant to section 1.18 of the Commission's rules of practice and procedure.

(H) The Secretary shall cause prompt publication of this order to be made in the FEDERAL REGISTER.

By the Commission.

KENNETH F. PLUMB,
Secretary.

[FR Doc. 78-25411 Filed 9-8-78; 8:45 am]

[6740-02]

[Docket No. RP73-65 (PGA No. 78-4) (AP No. 78-1)]

COLUMBIA GAS TRANSMISSION CORP.

Order Accepting for Filing and Suspending Proposed PGA Rate Increase, Initiating Hearing and Establishing Procedures

AUGUST 31, 1978.

On July 31, 1978, Columbia Gas Transmission Corp. (Columbia) filed revised tariff sheets [1] to become effective September 1, 1978, to reflect (1) an increase of $51.9 million annually in the current average cost of gas purchased from pipeline and producer suppliers, (2) revised surcharges to recover $25.1 million in the unrecovered purchased gas cost account, (3) a transportation surcharge to recover the May 31, 1978, balance of $1.65 million in deferred transportation costs, and (4) an advance payment adjustment to recover $1.4 million annually, which reflects the cost of service effect of the change between the estimated net remaining balance of advance payments as of April 1, 1978 (included in Columbia's rates which became effective June 1, 1978, subject to refund in docket No. RP78-20), and the net remaining balance as of May 31, 1978.

Columbia's PGA filing reflects, in its current average cost of gas, purchases from producer suppliers in Ohio of 21.96 million Mcf of gas at a cost of $31.7 million. The rates for these purchases average $1.44 per Mcf, and range as high as $1.90 per Mcf, which is in excess of the appropriate nationwide rates. In addition, some of the Ohio producer contracts reflect two-party "favored nations" clauses, and/or deregulation clauses which permit certain producers to obtain competitive prices for their gas regardless of vintage or contract date.

By order issued in docket No. RP73-65 (PGA75-5) on April 18, 1977, the Commission found that the majority of sales to Columbia by Ohio producers were not subject to this Commission's rate or certificate jurisdiction. Consequently, by order issued August 1, 1977, in that same docket, the Commission found that Columbia could flow through the costs from these nonjurisdictional purchases, but only where the rates for such purchases were shown to be reasonable and prudent. Issues relating to the reasonableness and prudency of Columbia's purchases from nonjurisdictional Ohio producers were the subject of a hearing held in docket No. RP73-65 (PGA77-4 and 78-2) and are currently awaiting initial decision by the administrative law judge.

In the instant proceeding Columbia has not presented sufficient evidence for the Commission to find that the prices paid for the nonjurisdictional purchases were prudent.

During the period January through June 1978, principally the months of February through April, Columbia entered into various emergency arrangements with both affiliated and nonaffiliated companies to supplement its system supply. These arrangements included peak shaving agreements and emergency gas purchases which resulted in rates in excess of the appropriate nationwide rates. There is insufficient evidence for the Commission to find that the rates charged as a result of these emergency arrangements were those that a prudent pipeline would have paid under similar circumstances.

Columbia's transportation surcharge and advance payment adjustment comport with the requirements of articles X and IX, respectively, of the settlement agreement approved by order of this Commission in docket No. RP76-94 et al., on March 16, 1978. Accordingly, we believe Columbia should be allowed to include amounts related to these items in its rates.

In view of the foregoing discussion, we will suspend the effectiveness of the filing 1 day, until September 2, 1978, at which time it may be made effective subject to refund. We will also set for hearing the questions relating to the prudency of Columbia's nonjurisdictional Ohio producer purchases and emergency arrangements.

Public notice of Columbia's filing was issued on August 9, 1978, with protests and petitions to intervene due on or before August 24, 1978.

The Commission orders: (A) Columbia's proposed sheets referenced herein are hereby accepted for filing and suspended for 1 day, until September 2, 1978, when they shall become effective subject to refund.

(B) Pursuant to the authority of the Natural Gas Act, particularly sections 4, 5, 7, 14, 15, and 16, and the Commission's rules and regulations, a public hearing shall be held in this proceeding to determine the prudency of Columbia's nonjurisdictional Ohio producer purchases and the emergency arrangements entered into by Columbia during the period January through June 1978, and reflected in this filing.

(C) Columbia's case-in-chief in support of the prudence of the above-referenced purchases shall be filed with the Commission no later than September 27, 1978.

(D) Staff's statement of position shall be filed on or before October 25, 1978.

(E) A presiding administrative law judge, to be designated by the Chief Administrative Law Judge pursuant to 18 CFR 3.5(d), shall convene a prehearing conference in this proceeding to be held within 10 days after the service of staff's statement of position in a hearing room of the Federal Energy Regulatory Commission, 825 North Capitol Street NE., Washington, D.C. 20426. The presiding judge is authorized to establish such further procedural dates as may be necessary and to rule on all motions (except motions to sever, consolidate or dismiss) as provided for in the rules of practice and procedure.

(F) The Secretary shall cause prompt publication of this order in the FEDERAL REGISTER.

By the Commission.

KENNETH F. PLUMB,
Secretary.

[FR Doc. 78-25412 Filed 9-8-78; 8:45 am]

[6740-02]

[Docket No. ES78-55]

PACIFIC POWER & LIGHT CO.

Application

SEPTEMBER 1, 1978.

Take notice that on August 24, 1978, Pacific Power & Light Co. (Applicant), a Maine corporation, qualified to transact business in the States of Oregon, Wyoming, Washington, California, Montana, and Idaho, with its principal business office at Portland,

[1] Forty-sixth Revised Sheet No. 16 and Twenty-second Revised Sheet No. 64A to FERC Gas Tariff, Original Vol. No. 1.

Oreg., filed an application with the Federal Energy Regulatory Commission, pursuant to section 204 of the Federal Power Act, seeking an order authorizing it to issue not to exceed 2,500,000 shares of its common stock of the par value of $3.25 per share (additional common stock).

Applicant proposes to sell the additional common stock at competitive bidding in accordance with the applicable requirements of section 34.1a of the Commission's regulations.

Proceeds from the issuance and sale of the shares of additional common stock will be used to repay short-term notes prior to or as they mature and any remainder will be used to finance, in part, applicant's 1978-79 construction program currently estimated at $579,837,000.

Any person desiring to be heard or to make any protest with reference to said application should, on or before September 15, 1978, file with the Federal Energy Regulatory Commission, Washington, D.C. 20426, petitions to intervene or protests in accordance with the requirements of the Commission's rules of practice and procedure (18 CFR 1.8 or 1.10). All protests filed with the Commission will be considered by it in determining the appropriate action to be taken but will not serve to make the protestants parties to the proceeding. Persons wishing to become parties to a proceeding or to participate as a party in any hearing therein must file petitions to intervene in accordance with the Commission's rules. The application is on file with the Commission and available for public inspection.

KENNETH F. PLUMB,
Secretary.

[FR Doc. 78-25413 Filed 9-8-78; 8:45 am]

[6740-02]

[Docket No. E-9572]

PAPAGO TRIBAL UTILITY AUTHORITY AND ARIZONA ELECTRIC POWER COOPERATIVE, INC. v. ARIZONA PUBLIC SERVICE CO.

Notice of Certification of Proposed Stipulation and Settlement

SEPTEMBER 1, 1978.

On July 26, 1978, Presiding Administrative Law Judge Allen C. Lande certified to the Commission an agreement reached by the parties in this proceeding as a proposed settlement of matters raised in a complaint jointly filed October 28, 1976, by the Papago Tribal Utility Authority (Papago) and Arizona Electric Power Cooperative (AEPCO) against Arizona Public Service Co. (Arizona).[1]

The complaint filed in this case alleged, among other things, that Arizona had flowed through additional investment tax credits realized under the Tax Reduction Act of 1975 only from September 16, 1975, forward instead of from January 1, 1975, and thereby failed to comply with the terms of an earlier settlement agreement (in Docket No. E-8621, et al) and with the terms of the Commission's Order of September 16, 1975, approving that settlement.[2]

The proposed settlement in the present case purports to make the provisions of section 3 of the earlier settlement agreement effective as of midnight between March 16, and 17, 1975, by providing that Arizona will refund certain of its customers[3] prinipal of $257,329.79 which represents benefits associated with investment tax credits realized by Arizona under the Tax Reduction Act of 1975. Arizona has also agreed under the settlement to pay interest on the entire principal at the rate of 9 percent per annum for the period starting as of the midmonth point of June 1975 and continuing until the date of payment.

Any person desiring to be heard or to protest said settlement agreement should file comments with the Federal Power Commission, 825 North Capitol Street, NE., Washington, D.C. 20426, on or before September 22, 1978. Comments will be considered by the Commission in determining the appropriate action to be taken. Copies of this agreement are on file with the Commission and are available for public inspection.

KENNETH F. PLUMB,
Secretary.

[FR Doc. 78-25414 Filed 9-8-78; 8:45 am]

[1]By order dated July 5, 1977, the Federal Power Commission instituted an investigation into the complaint and also granted petitions to intervene filed by the Wellton-Mohawk Irrigation and Drainage District and the Arizona Power Authority, customers of Arizona. Citizens Utilities Company, another customer, was permitted to intervene out of time by the Commission's order of August 29, 1977.

[2]Section 3 of the earlier settlement agreement which requires Arizona to flow through certain tax credit benefits provides:

The Federal income tax law having been changed by the Tax Reduction Act of 1975 and APS having made its election thereunder to immediate flow through of a greater investment tax credit benefit than was previously available, this shall be deemed good cause for implementation of an adjustment flowing through all of the additional investment tax credit benefit to APS under the "Correction of Formulae" provisions of the adjustment clause in APS's wholesale power or transmission agreements containing such correction clause, including the wholesale contracts with (Citizens Utilities Company, Wellton-Mohawk Irrigation Drainage District, Arizona Power Authority, Papago and AEPCO).

Ordering paragraph (B) of the Commission's September 16, 1975, order approving the earlier settlement states in part:

. . . *Provided, however,* that Arizona shall flow through all of the investment tax credit resulting from the Tax Reduction Act of 1975, as provided in the settlement agreement.

[3]In addition to making refunds to Papago, AEPCO, and the intervenor customers (see footnote 1, supra), Arizona has also apparently agreed to make refunds to the Salt river Project Agricultural Improvement and Power District, the Navaho Tribal Utility Authority, and to Tucson Gas and Electric Co., although these customers have not formally executed the agreement (see Attachment to Stipulation and Settlement).

[6740-02]

[Docket No. ER78-514]

SUPERIOR WATER, & AND POWER CO.

Order Accepting for Filing and Suspending Proposed Rate Increase, Providing for Hearing, and Establishing Procedures

ISSUED AUGUST 31, 1978.

On July 28, 1978, Superior Water, Light & Power Co. (Superior) tendered for filing revised rates[1] for electric service to its only wholesale customer, Dahlberg Light & Power Co. (Dahlberg). The proposed rate charges would result in additional revenue of $46,357 (2.7 percent) for the 12-month period ending December 31, 1979.

In support of its filing Superior states that the increase is necessary in order to recover a proportionate share of the increase in costs of purchased power which it is experiencing from its parent company, Minnesota Power & Light Co. (M.P. & L.),[2] due to M.P. & L.'s filed rate increase in docket No. ER78-425.[3]

Notice of the filing was issued on August 4, 1978, with comments, protests, or petitions to intervene due on or before August 18, 1978. None have been received at this time.

Our review indicates that the rates filed by Superior have not been shown to be just and reasonable and may be unjust, unreasonable, unduly discriminatory, or otherwise unlawful. Due to the fact that Superior's increase is predicated primarily on the pass-through of increased purchased power costs from M.P. & L.[4] we shall accept Superior's rates for filing and suspend the same until December 7, 1978, when they shall become effective subject to refund.

The Commission orders: (A) Pursuant to the authority contained in and subject to the jurisdiction conferred

[1]Designated as: Superior Water, Light & Power, Supplement No. 7 to Rate Schedule FPC No. 12 (supersedes Supplement No. 6).

[2]Superior purchases 90 percent of its total requirements from M.P. & L. and generates the balance.

[3]*Minnesota Power & Light Co.*, docket No. ER78-425, order issued July 3, 1978.

[4]The July 3, 1978, Order in docket No. ER78-425 suspended M.P. & L.'s rate increase until December 7, 1978.

upon the Federal Energy Regulatory Commission by section 402(a) of the Department of Energy Act and by the Federal Power Act, particularly sections 205, 206, 301, 308, and 309 thereof, and pursuant to the Commission's rules of practice and procedure and to the regulations under the Federal Power Act (18 CFR Chapter I), a public hearing shall be held concerning the justness and reasonableness of the rate increase proposed by Superior in this proceeding.

(B) Pending such hearing and decision thereon, the proposed increased rates and charges filed by Superior on July 28, 1978, are hereby accepted for filing, suspended and the use thereof deferred until December 7, 1978, when they shall become effective, subject to refund.

(C) The staff shall prepare and serve top sheets on all parties on or before January 18, 1979.

(D) A Presiding Administrative Law Judge to be designated by the Chief Administrative Law Judge for that purpose shall preside at a prehearing conference in this proceeding to be held within fifteen (15) days of the service of staff's top sheets, in a hearing room of the Federal Energy Regulatory Commission, 825 North Capitol Street NE., Washington, D.C. 20426. Said judge is authorized to establish procedural dates and to rule upon all motions (except motions to consolidate and sever, and motions to dismiss) as provided for in the Commission rules of practice and procedure.

(E) In the event M.P. & L. is required to modify or adjust its rates as proposed in docket No. ER78-425 by Commission order in that proceeding, then Superior shall flow through the appropriate portion of any refunds received by reason of said Commission order and shall file revised rates herein to reflect such decision.

(F) The Secretary shall cause prompt publication of this order to be made in the FEDERAL REGISTER.

By the Commission.

KENNETH F. PLUMB,
Secretary.

[FR Doc. 78-25415 Filed 9-8-78; 8:45 am]

[6740-02]

[Docket Nos. RP73-3 (PGA78-3); RP73-3 (PGA76-1a); RP73-3 (PGA76-2); RP73-69, RP72-99 (EPGA76-3); RP73-3, *et al.* (PGA77-3a); RP72-99, RP75-75 (EPGA76-1) and RP72-99, RP75-75 (EPGA76-2)]

TRANSCONTINENTAL GAS PIPE LINE CO.

Order Accepting for Filing and Suspending Proposed PGA Rate Increase, Initiating Hearing, and Consolidating Proceedings

ISSUED AUGUST 31, 1978.

On August 1, 1978, Transcontinental Gas Pipe Line Corp. (Transco) filed in Docket No. RP73-3 revised tariff sheets[1] containing a proposed PGA rate increase consisting of (1) an increase of 13.9 cents per dth or approximately $82.7 million annually in the current cost of gas and (2) a deferred account surcharge of 6.8 cents per dth to recoup approximately $48.9 million of unrecovered purchased gas costs. Transco requests an effective date of September 1, 1978. For the reasons set forth below, Transco's proposed tariff sheets shall be accepted for filing and suspended for 1 day, subject to the conditions discussed herein.

Transco's filing was noticed on August 9, 1978, providing that comments or petitions to intervene be filed on or before August 25, 1978.

Transco's PGA filing includes 60-day emergency purchases which have been made at rates in excess of the appropriate nationwide rates. There is insufficient evidence for the Commission to find the prices paid for these "emergency" purchases were at rates that a prudent pipeline would have paid under similar circumstances. We will suspend the effectiveness of the tendered tariff sheets, listed above in note 1, for 1 day until September 2, 1978, subject to refund and subject to the condition established herein. We will also set for hearing the question of the prudence of these purchases.

In anticipation that such a suspension would be imposed in connection with the emergency purchase costs, Transco filed additional revised tariff sheets on August 1, 1978, which sheets do not include emergency purchase costs in excess of the appropriate nationwide rates.[2] Transco requests that the rates proposed by the additonal tariff sheets be effective September 1, 1978, without suspension. Such rates reflect increases of (1) 13.9 cents per dth to the current purchased gas cost adjustment, and (2) 3.3 cents per dth to the deferred account surcharge. Based upon an examination of the information contained in Transco's filing, the Commission finds that, except for the out-of-period costs discussed below, these proposed rates are in accord with the requirements of Transco's PGA tariff provision and are otherwise just and reasonable. Accordingly, such proposed rates shall be accepted for filing without suspension, and may become effective on September 1, 1978, subject to their revision to eliminate out-of-period costs.

With respect to the emergency purchase costs reflected in the PGA78-3 filing, the Commission notes that a portion of those costs relate to emergency purchase arrangements which occurred outside of the 6-month accrual period for the deferred account surcharge. In fact, several of the emergency purchase transactions in question took place as early as the 1976-77 winter. The inclusion of such long out-of-period expenses is not explained, nor is it in accord with the terms of Transco's PGA tariff provision. It is the Commission's purpose in applying our PGA regulations to provide regulated pipelines with a method of promptly recouping increases in their purchased gas costs since these costs constitute such significant portion of the pipeline's cost of service. The PGA regulations do not contemplate the undue delays in the recording and recoupment of purchased gas costs evident in this case. Consequently, we shall require Transco to file revised tariff sheets which do not reflect costs associated with emergency purchase volumes delivered to Transco outside of the 6-month deferred account accrual period for the PGA78-3 filing.

The Commission also notes that there are tariff filings currently pending in a number of PGA dockets by which Transco sought to recoup the costs of various emergency purchases at prices in excess of the national rate.[3] In those pending proceedings, the Commission or its predecessor, the Federal Power Commission, suspended Transco's rate increase filings for 1 day and requested Transco to comply with certain requests for data. No hearings were ordered in any of the pending dockets, nor has there been a finding that the emergency purchase costs involved were reasonable and prudent. Since these earlier filings and the PGA78-3 filing present common questions of law and fact regarding emergency purchase costs, we shall consolidate those earlier dockets (listed in note 3) with the instant docket for the sole purpose of determining whether Transco's emergency purchases were reasonable and prudent.

The Commission orders: (A) Subject to the condition of Ordering Paragraph (C) below, Transco's proposed Ninth Revised Sheet No. 12 and Eighth Revised Sheet No. 15 to FERC Gas Tariff Second Revised Volume No. 1 are accepted for filing without

---

[1] Tenth Revised Sheet No. 12 and Ninth Revised Sheet No. 15 to FERC Gas Tariff, Second Revised Volume No. 1.

[2] Ninth Revised Sheet No. 12 and Eighth Revised Sheet No. 15 to FERC Gas Tariff Second Revised Volume No. 1.

[3] See PGA76-1a, PGA76-2, and PGA77-3a in docket No. RP73-3; see also EPGA76-3 in docket Nos. RP73-69 and RP72-99, EPGA76-1 in docket Nos. RP72-99 and RP75-75, and EPGA76-2 in docket Nos. RP72-99 and RP75-75.

suspension, and may become effective on September 1, 1978.

(B) Subject to the condition of Ordering Paragraph (C) below, Transco's proposed Tenth Revised Sheet No. 12 and Ninth Revised Sheet No. 15 to FERC Gas Tariff Second Revised Volume No. 1 are accepted for filing and suspended for 1 day, and may become effective on September 2, 1978.

(C) Transco shall file within 15 days of the date of this order revised copies of Ninth and Tenth Revised Sheet Nos. 12, and Eighth and Ninth Revised Sheet Nos. 15 reflecting the elimination of costs associated with emergency purchase gas volumes not delivered during the 6-month accrual period for the deferred account surcharge of the PGA78-3 filing.

(D) The proceedings in the dockets listed in footnote 3 herein are consolidated with the proceeding in docket No. RP73-3 (PGA78-3) for the purpose of determining whether the emergency purchase costs affected by those dockets were reasonable and prudent.

(E) Transco's case-in-chief in support of the prudence of the above referenced purchases shall be filed with the Commission no later than September 27, 1978. The Staff shall serve its statement of position in the consolidated proceeding on or before October 25, 1978.

(F) A Presiding Administrative Law Judge, to be designated by the Chief Administrative Law Judge for that purpose (18 CFR 3.5(d)) shall convene a settlement conference in this proceeding to be held within 10 days after the service of Staff's statement of position in a hearing room of the Federal Energy Regulatory Commission, 825 North Capitol Street NE., Washington, D.C. 20426. The Presiding Administrative Law Judge is authorized to establish such further procedural dates as may be necessary and to rule on all motions (except motions to sever, consolidate or dismiss) as provided for in the rules of practice and procedure.

(G) The Secretary shall cause prompt publication of this order in the FEDERAL REGISTER.

By the Commission.

KENNETH F. PLUMB,
Secretary.

[FR Doc. 78-25416 Filed 9-8-78; 8:45 am]

[6740-02]

[Docket No. ER78-512]

WISCONSIN ELECTRIC POWER CO.

Order Conditionally Accepting Proposed Rate Schedules for Filing, Suspending Proposed Rate Increase, Establishing Procedures, and Granting Intervention

AUGUST 31, 1978.

On July 28, 1978, Wisconsin Electric Power Co. (WEPC) submitted for filing a proposed increase in rates for electric service to the cities, villages, and towns of Cedarburg, Clintonville, Deerfield, Elkhorn, Florence, Hartford, Jefferson, Kaukauna, Kiel, Lake Mills, Meansha, New London, Oconomowoc, Oconoto Falls, Shawano, Slinger, and Waterloo, Wis., the city of Crystal Falls, Mich., and the Ontonagon County rural Electrification Association, hereinafter referred to as "Wis-Mich customers"; Upper Peninsula Power Co.; city of Norway; and Alger Delta Cooperative Electric Association.

WEPC requests an effective date of September 1, 1978, for all customers except the cities of Kaukauna-Menasha. The contract between WEPC and Kaukauna-Menasha indicates that no increase in rates can properly become operative until final approval, either by the Commission or the courts.[1] WEPC, therefore, requests a waiver of the 90-day statutory notice requirements for Kaukauna-Menasha.

The proposed rate schedule provides for an increase in the monthly demand charge from $4.6999 to $6.26 kW and in the energy charge from 0.9454 cents to 1.0326 cents/kWh to Kaukauna-Menasha.

WEPC also propose an increase in the monthly demand charge from 1.0785 cents to 1.0410 cents/kWh to the other wholesale customers. WEPC uses the identical fuel clause for each of the two classes of customers as it used for the present rates except that for each customer, the base cost of fuel is increased. The fuel adjustment clause included in the proposed rate schedule conforms to the requirements of section 35.14 of the regulations.

WEPC's case-in-chief is based upon a test period consisting of the 12 months ending December 31, 1978. Based upon that test period, the proposed rates would increase revenues by approximately $2,054,150 (7.66 percent).

Public notice of the filing was issued on August 8, 1978, with protests or petitions to intervene due on or before August 18, 1978. On August 16, 1978, the Wis-Mich customers filed a petition to intervene, assertion of Mobile-Sierra defenses, request to reject, and request for maximum suspension. On August 17, 1978, Upper Peninsula Power Co. (Upper Peninsula) filed a petition to intervene. On August 21, 1978, Public Service Commission of Wisconsin (PSCW) filed an untimely notice of intervention in the event formal hearing is held. On August 22, 1978, WEPC filed an answer to request for rejection, objecting to Wis-Mich customers requests that the WEPC filing be summarily rejected.

The Wis-Mich customers state that, except for Kaukauna and Menasha, each Wis-Mich customers purchases all or substantially all of its electric requirements for its distribution system and municipal use from WEPC under one of the rate schedules which is proposed to be changed by the filing in this docket. Kaukauna and Menasha have their own generation, and pursuant to an interconnection agreement with WEPC, purchase firm power from WEPC for part of their requirements pursuant to one of the schedules proposed to be changed by the filing in this docket.

The Wis-Mich customers seek to reserve the price squeeze issue,[2] pleading lack of time to adequately analyze this question in their petition for intervention. However, one of the purposes of 18 CFR 2.17 is to provide expedited price squeeze discovery procedures. In this regard, the specificity of section 2.17 overrides the general provisions of 18 CFR 1.11 permitting amendment of pleadings until shortly before the beginning of hearings. Moreover, to the extent that price squeeze serves as a basis for a Commission decision as to whether a filing should be suspended, price squeeze allegations, like other issues raised in petitions to intervene, must be before the Commission at the time the Federal Power Act requires action on rate filings. The rule enunciated in *Monogahela Power Company*[3] is equally applicable here. There, we indicated an intent to require strict compliance with section 2.17 of our regulations, and that the allegations specified in that section (viz., price discrimination and anticompetitive effect) be contained in petitions to intervene if the issue is to be raised by intervenors. However, in light of the fact that some deviation from this practice has been permitted in the past, we will grant an exception in this case and allow Wis-Mich customers 20 days within which to submit supplementary pleadings containing the price squeeze allegations required by section 2.17. If petitioners fail to file such allegations, they may not subsequently seek to initiate section 2.17 procedures.

---

[1] *City of Kaukauna, Wisc. v. FERC*, No. 76-1561, —— F. 2d —— (DCCA—1978).

[2] *Conway Corp. v. F.P.C.*, 510 F. 2d 1264 (1775), aff'd, *F.P.C. v. Conway Corp., et al.*, 426 U.S. 271 (1976).

[3] *Monongahela Power Co.*, docket No. ER78-484, order issued Aug. 10, 1978.

The Wis-Mich customers urge the Commission to independently examine each of the contracts between WEPC and its wholesale cutomers to determine if the filing violates any of those contracts under the *Sierra-Mobile* doctrine.[4] Wis-Mich customers request that the Commission summarily reject WEPC's filing as to New London and Shawano, alleging that the filing violates their contracts as the contracts have been construed by the Commission in *Wisconsin Electric Power Company/Wisconsin Michigan Power Company*, order on reconsideration, issued April 29, 1977, and order denying in part and granting in part petitions for rehearing, issued July 26, 1977, in docket Nos. ER76-303 and ER76-399. WEPC, in its answer to request for rejection, alleges New London and Shawano seeks to exploit a "procedural dilemma" in which WEPC finds itself as a result of New London's and Shawano's tardiness in raising *Mobile-Sierra* claims in docket Nos. ER76-303 and Er76-399; and becuase of the failure, to date, of the U.S. Court of Appeals to render a decision in *Wisconsin Electric Power Co.* v. *FERC*, Nos. 77-1777, 77-1921, 77-1825, and 77-2045.

We acknowledge responsibility to ascertain whether proposed rate increases conflict with any existing contractual arrangements. However, the contracts are between the parties. The parties, therefore, share the responsibility to bring to the attention of the Commission any alleged contractual violations resulting from tariff applications. Our initial review indicates that WEPC's proposed rate increase does not appear to violate existing contracts except as applied to New London and Shawano. This Commission found in docket Nos. ER76-303 and ER76-399 that the contracts of Florence, New London, and Shawano provide that rates to these customers cannot exceed WEPC's retail rates for large industrial customers in effect at the time of WEPC's tender for filing here. WEPC's instant submittal does not appear to violate Florence's contract. As to the cities of New London and Shawano, WEPC will be required to file, within thirty (30) days, a revised tariff, reflecting reduced rates eliminating that portion which is above the level of WEPC's approved industrial retail rate on file with Public Service Commission of Wisconsin on July 28, 1978. In the interim, the parties may submit further pleading and defenses arising from their contracts.

Wis-Mich customers allege that WEPC's proposed rates are excessive due to WEPC's treatment of rate of return, nuclear fuel costs, allocation method, working capital, deferred taxes, plant held for future use, and return of investment tax credit. Wis-Mich customers request summary rejection of WEPC return on investment tax credit in WEPC's filing. WEPC in its answer to request for rejection urges the Commission to reject Wis-Mich customers' request, alleging that the investment tax credits should be included in the capital structure at the equity return rate. We find that Wis-Mich customers' argument concerning investment tax credit is correct. The Commission, in opinion No. 19, *Carolina Power & LIght Co.*, issued August 2, 1978, held that "the return allowed to ADITC should be measured by the overall rate of return rather than the higher common equity return" (mimeo, page 7). Therefore, we shall direct WEPC to refile its capital structure to reflect the investment tax credit component which is consistent with the *Carolina Power & Light* opinion.

Wis-Mich customers allege further that the contracts of Florence, New London, and Shawano prohibit them from purchasing power from any source other than WEPC and that this is an anticompetitive restraint on trade. WEPC opposes Wis-Mich customers' request for a maximum suspension, but does not oppose their requests for intervention, investigation, and prompt issuance of staff's top sheets.

We conclude that Wis-Mich customers, Upper Peninsula Power Co., and Public Service Commission of Wisconsin are interested parties within the meaning of 18 CFR 1.8 and that good cause exists to permit intervention in this proceeding.

Our review indicates that the proposed rates have not been shown to be just and reasonable and may be unjust, unreasonable, unduly discriminatory, preferential, or otherwise unlawful. Therefore, the Commission shall conditionally accept the submittal for filing and suspend the proposed rates for 5 months, except for Kaukauna and Menasha, after which the rates and services will go into effect on February 1, 1979, subject to refund. Rates for Kaukauna and Menasha will go into effect only after a final order is issued in this docket in accordance with the terms of their contract.

The Commission finds: It is necessary and in the public interest that an evidentiary hearing be held in this docket in order for the Commission to discharge its responsibilities under sections 205 and 206 of the Federal Power Act.

The Commission orders: (A) Pursuant to the authority contained in and subject to the jurisdiction conferred upon the Federal Energy Regulatory Commission by section 402(a) of the Department of Energy Act and by the Federal Power Act, particularly sections 205, 206, 301, 308, and 309 thereof and pursuant to the Commission's rules of practice and procedure and to the regulations under the Federal Power Act (18 CFR Chapter I), a public hearing shall be held concerning the justness and reasonableness of the rate increase proposed by Wisconsin Public Service Corp. in this proceeding.

(B) Pending such hearing and decision thereon, the proposed increased rates and charges filed by Wisconsin Electric Power Co. on July 28, 1978, are hereby accepted for filing, suspended, and the use thereof deferred until February 1, 1979, when they shall become effective, subject to refund, on the condition that WEPC file a revised tariff, within 30 days, reflecting reduced rates to the cities of New London and Shawano eliminating that portion which is above the level of WEPC's approved industrial rate on file with the Public Service Commission of Wisconsin and in effect on July 28, 1978; and on the condition that WEPC refile its capital structure and rates based thereon within 30 days of the issuance of this order consistent with paragraph (H), infra.

(C) WEPC's request for waiver of the 90-day notice requirements of section 35.3 of the Commission's rules of practice and procedure as to the cities of Kaukauna and Menasha is granted.

(D) The staff shall prepare and serve top sheets on all parties for settlement purposes on or before December 1, 1978.

(E) An administrative law judge to be designated by the Chief Administrative Law Judge shall preside at a prehearing conference in this proceeding to be held on December 10, 1978, at 10 a.m., in a hearing room of the Federal Energy Regulatory Commission, 825 North Capitol Street NE., Washington, D.C. 20426. Said judge is authorized to establish procedural dates and to rule upon all motions as provided for in the Commission's rules of practice and procedure.

(F) As set forth above, within 20 days from the issuance of this order, petitioners may amend their petition to intervene to set forth the allegations of price squeeze required by 18 CFR 2.17; otherwise, the issue of price squeeze will not be involved in this proceeding absent extraordinary circumstances developed during the course of the hearing herein ordered. In the event the petition to intervene is amended as herein permitted, the administrative law judge is hereby authorized to initiate the price squeeze procedures of 18 CFR 2.17 and to convene a conference for the purpose of

[4] A contractual rate cannot be increased until this Commission first determines that it is "so low as to conflict with the public interest." *F.P.C.* v. *Sierra Pacific Power Co.*, 350 U.S. 348 (1956); *F.P.C.* v. *Mobile Gas Service Corp.*, 350 U.S. 332 (1956).

discovery procedures as therein contemplated.

(G) The Wis-Mich customers, Upper Peninsula Power Co., and the Public Service Commission of Wisconsin are hereby permitted to intervene in this proceeding subject to the rules and regulations of the Commission: *Provided, however,* That participation by such intervenors shall be limited to matters set forth in their petition to intervene: *And provided further,* That the admission of such intervenors shall not be construed as recognition by the Commission that they might be aggrieved because of any order or orders of the Commission entered in this proceeding.

(H) Wis-Mich customers' motion for summary judgment with respect to the investment tax credit is hereby granted.

(I) The Secretary shall cause prompt publication of this order to be made in the FEDERAL REGISTER.

By the Commission.

KENNETH F. PLUMB,
Secretary.

[FR Doc. 78-25417 Filed 9-8-78; 8:45 am]

[6740-02]

[Docket No. CP78-302]

NATURAL GAS PIPELINE CO. OF AMERICA

Tariff Filing

SEPTEMBER 1, 1978.

Take notice that on August 15, 1978, Natural Gas Pipeline Co. of America (Natural), tendered for filing to be a part of its FERC Gas Tariff, Second Revised Volume No. 2, initial rate schedule X-99, consisting of original sheet Nos. 1187 through 1200.

Rate schedule X-99 contains the terms of an agreement dated March 27, 1978, for the exchange of gas between Natural and Columbia Gulf Transmission Co. By order issued August 3, 1978, the Commission authorized this exchange service as filed in Natural's and Columbia's joint application at docket No. CP78-302.

Any person desiring to be heard or to protest said filing should file a petition to intervene or protest with the Federal Energy Regulatory Commission, 825 North Capitol Street NE., Washington, D.C. 20426, in accordance with sections 1.8 and 1.10 of the Commission's rules of practice and procedure (18 CFR 1.8, 1.10). All such petitions or protests should be filed on or before September 11, 1978. Protests will be considered by the Commission in determining the appropriate action to be taken, but will not serve to make protestants parties to the proceeding. Any person wishing to become a party must file a petition to intervene. Copies of this filing are on file with the Commission and are available for public inspection.

KENNETH F. PLUMB,
Secretary.

[FR Doc. 78-25418 Filed 9-8-78; 8:45 am]

[6740-02]

[Docket No. RP78-50]

NORTHERN NATURAL GAS CO.

Notice of Extension of Time

AUGUST 29, 1978.

On August 17, 1978, Commission staff counsel filed a motion to extend the time for filing top sheets in this proceeding as required by the order issued May 26, 1978.

Upon consideration, notice is hereby given that an extension of time is granted to and including October 2, 1978, for the service of top sheets by the staff.

LOIS D. CASHELL,
Acting Secretary.

[FR Doc. 78-25419 Filed 9-8-78; 8:45 am]

[6740-02]

[Docket No. ER78-560]

SOUTHERN INDIANA GAS & ELECTRIC CO.

Proposed Tariff Change

SEPTEMBER 1, 1978.

Take notice that Southern Indiana Gas & Electric Co. (Southern Indiana) on August 29, 1978, tendered for filing proposed changes in its FPC electric service tariff.

Southern Indiana indicates that the purpose of this filing is to revise Service Schedule D—Short-Term Power. the demand charge for short-term power is proposed to be increased from $0.10 per kilowatt per day if the period is less than a week. In the event the amount of short-term energy taken is reduced upon the request of the supplying party the demand charge for the period during which such reduction is made shall be reduced by $0.10 per kilowatt of reduction for each day (other than Sunday) during which such reduction is in effect.

The proposed revision and addition reflect a desire on the part of both parties to provide for present and anticipated future increases in costs and to attain the maximum benefit from the interconnection of their systems.

Souther Indiana requests waiver of the notice requirements of § 35.3 of the Commission's regulations to permit an effective date of October 1, 1978.

Southern Indiana states that copies of the filing were served upon Big Rivers who has filed its certificate of concurrence, the Public Service Commission of the State of Indiana, and the Public Service Commission of the Commonwealth of Kentucky.

Any person desiring to be heard or to protest said application should file a petition to intervene or protest with the Federal Energy Regulatory Commission, 825 North Capitol Street NE., Washington, D.C. 20426, in accordance with sections 1.8 and 1.10 of the Commission's rules of practice and procedure (18 CFR 1.8, 1.10). All such petitions or protests should be filed on or before September 15, 1978. Protests will be considered by the Commission in detemining the appropriate action to be taken but will not serve to make protestants parties to the proceeding. Any person wishing to become a party must file a petition to intervene. Copies of this application are on file with the Commission and are available for public inspection.

KENNETH F. PLUMB,
Secretary.

[FR Doc. 78-25420 Filed 9-8-78; 8:45 am]

[6740-02]

[Docket No. RP75-73 (AP No. 78-3)]

TEXAS EASTERN TRANSMISSION CORP.

Order Accepting for Filing, Suspending for 1 Day and Setting Proposed Rates for Hearing

SEPTEMBER 1, 1978.

On July 31, 1978,[1] Texas Eastern Transmission Corp. (Texas Eastern) filed a net 0.13¢ per dth decrease to the commodity component of its resale rates to reflect a net reduction of $6,353,601 in its advance payment account balance as of June 30, 1978, which would reduce the balance to $138,668,934. The proposed effective date is September 1, 1978.

The proposed net decrease is filed pursuant to the advance payment tracking provisions contained in Article Nos. IV (Payments) and V (Repayment) of the approved settlement Agreement in Docket No. RP75-73.[2]

The Commission orders on advance payments[3] require that an advance be fully reduced within 5 years, or as otherwise authorized by the Commission, from the date gas deliveries commence or from a date at which it is determined that recoveries will be in other than gas. However, if gas deliveries have not commenced or a determination that recoveries will be in other than gas has not been made within 5 years from the date the advance was included in Account 166, the advance

[1] Forty-third Revised Sheet Nos. 14, 14A through 14D to FERC Gas Tariff, Fourth Revised Vol. No. 1.

[2] Commission orders issued June 6 and Aug. 1, 1977, approving and making final the settlement agreement in Docket No. RP75-73.

[3] Commission Order No. 410, 410A, 441, 465 and 483.

must be removed from Account 166 and rate base treatment must cease, unless otherwise directed by the Commission.

The information submitted by Texas Eastern is not sufficient to determine whether or not the repayments reflected in the proposed rate reduction are fully in compliance with the above stated requirements and we will accordingly suspend the effectiveness of the proposed rates for 1 day. We will also set for hearing the matter of whether Texas Eastern has complied with the appropriate provisions of the above cited orders with respect to the duration of rate base treatment of these advances.

The Commission orders:

(A) The effectiveness of the 43d Revised Sheet Nos. 14, 14A through 14D to FERC Gas Tariff, 4th Revised Volume No. 1 is hereby suspended for 1 day, until September 2, 1978, at which time they may be made effective subject to refund.

(B) Texas Eastern's case-in-chief in support of the proposed rates shall be filed with this Commission no later than September 22, 1978.

(C) Staff's statement of position shall be filed on or before October 28, 1978.

(D) A Presiding Administrative Law Judge to be designated by the Chief Administrative Law Judge (18 CFR 3.5(d)) shall convene a settlement conference in this proceeding to be held within 10 days after the service of staff's statement of position in a hearing room of the Federal Energy Regulatory Commission, 825 North Capitol Street NE., Washington, D.C. 20426. The Presiding Administrative Law Judge is authorized to establish such further procedural dates as may be necessary and to rule on all motions (except motions to sever, consolidate or dismiss) as provided for in the rules of practice and procedure.

(E) The Secretary shall cause prompt publication of this order in the FEDERAL REGISTER.

By the Commission.

KENNETH F. PLUMB,
Secretary.

[FR Doc. 78-25421 Filed 9-8-78; 8:45 am]

[6740-02]

[Docket No. RP77-138]

UNITED GAS PIPE LINE CO.

Order Granting Petition for Advance Approval and Granting Interventions

SEPTEMBER 5, 1978.

On September 23, 1977,[1] United Gas Pipe Line Company (United) filed a petition[2] pursuant to § 154.38(d)(5)(i) of the Commission's Regulations[3] requesting advance assurance that United will be permitted to recover in rates some $12.7 million in research, development and demonstration (RD & D) expenditures associated with its "Project SNG-Biomass." The project will explore anaerobic digestion processes for the conversion of non-fossil carbonaceous materials (eg. municipal solid wastes (MSW), agricultural residues and "biomass"[4]) into methane (i.e. synthetic natural gas). If initial project research proves successful, United proposes to construct and operate a pilot facility having the capability of converting 100 tons per day of nonfossil carbonaceous materials into 1,000 Mcf per day of methane gas. The Commission shall rule that United's project expenditures are entitled to rate treatment subject to the annual review provisions of the Commission's regulations.

Notice of United's petition was issued on September 23, 1977, calling for protests or petitions to intervene to be filed on or before February 6, 1978. The State of Louisiana filed an untimely notice of intervention on March 30, 1978. Memphis Light, Gas and Water Division, City of Memphis, filed a timely petition to intervene. Inasmuch as both parties have demonstrated an interest in this proceeding, they shall be permitted to intervene.

As stated in more detail in the petition, as supplemented, United's Project SNG-Biomass seeks to convert a combination of MSW, agricultural residues and biomass into pipeline quality methane by an anaerobic digestion process. The project will initially consist of laboratory research into (1) feedstock selection, production, cultivation, transportation and storage and (2) anaerobic digestion technology. From this laboratory research a computerized process and economic model will be developed leading to the design, construction, and operation of a pilot plant. The project is expected to take at least 8 years and cost $12.7 million.

United indicates that one of the unique aspects of its proposal is the use of an optimum combination of terrestrial (bermuda grass) and aquatic (water hyacinths) plant cultures as a partial feedstock for the anaerobic digestion process. The combination of crops to be used will depend upon the specific wastes which will be gasified as well as the soil and water quality of the site location.

United also points out that its proposed use of anaerobic digestion should decrease energy consumption compared to the anaerobic digestion processes now employed in sewage disposal. Current sewage disposal techniques require that aqueous effluent resulting from the digestive process be subjected to secondary waste treatment. This secondary treatment converts the bulk of the energy-rich organic matter into carbon dioxide and water by oxidation but, in the process, consumes significant amounts of energy.

United proposes to develop a process which would use this aqueous effluent to raise aquatic plants which, in turn, could serve not only to remove a wide variety of water pollutants but also to capture solar energy by photosynthesis. Solid wastes produced by anaerobic digestion will be used to fertilize terrestrial crops.

United distinguishes its process from the process to be used at a pilot plant under construction at Pompano Beach, Fla. The latter process, United states, uses for feedstock a mixture of shredded MSW and primary sewage sludge. Dewatered residual sludge is landfilled and residual water from the sludge recycled directly back to the digestors or else applied to the landfill. United's project, on the other hand, uses a combined feedstock of biomass and MSW. Residual solids and liquids will be used to produce terrestrial and aquatic feedstock crops respectively. This approach, if successful, will minimize the disposal problems which occur as a result of anaerobic digestion.

United estimates that the first year of its project will cost $290,000; $220,000 of this total will be paid to the Institute of Gas Technology (IGT) under a May 18, 1977, contract between United and IGT. The research will test the anaerobic digestibility of bermuda grass, water hyacinths, and MSW from New Orleans, La.

Additionally, United signed on July 28, 1977, a letter of intent requiring a $50,000 contribution toward the design, construction and operation of a pilot plant at Walt Disney World in Orlando, Fla., to grow water hyacinths in 50,000 gallons per day of municipal sewage effluents. The project aims to determine whether effluent purification resulting from the growth of water hyacinths is sufficient to meet water quality standards. The project involves other companies, the National Aeronautical and Space Administration, the Environmental Protection Agency and the State of Florida. The total cost is expected to be $932,000 which will be shared by all participants over the 24 months of the proj-

---

[1] This proceeding was commenced before the FPC. By joint regulation of Oct. 1, 1977 (10 CFR 1000.1), it was transferred to the FERC.

[2] The petition was supplemented on Dec. 5, 1977, May 17, 1978, and July 12, 1978.

[3] Amended by Order No. 566 issued June 3, 1978, *rehearing denied* by order issued Aug. 3, 1977, in Docket No. RM76-17, *motion for reconsideration denied* by order issued Jan. 9, 1978, in Docket No. RM76-17.

[4] The "biomass" species to be studied in particular are water hyacinths and bermuda grass.

ect. Other costs in the first year of the Project SNG-Biomass are miscellaneous in character.

In accordance with § 154.38(d)(5)(iii) of the Commission's regulations [5] United's petition also purports to comply with the requirement that a 5 year R.D. & D. plan be submitted as part of United's request for advance approval.

United's Project SNG-Biomass involves research, design, construction and operation of an experimental anaerobic disgestion pilot plant for the conversion to synthetic gas of a unique and heretofore untested combination of selected biomass and waste feedstock. The results from the R.D. & D. effort will be closely monitored so that project tasks, goals and timetables may be modified or altered if necessary.

United has an R.D. & D. section within the company and it is being used to coordinate its efforts with private and Federal organizations and agencies to insure that there is no overlap or duplication. It will seek patents and licenses of significant inventions and all revenues derived from the R.D. & D. project will be credited to the gas customers.

Moreover, United agrees to comply with Order No. 566 and the Commission's regulations by filing annually a comprehensive and detailed report on the R.D. & D. results, progress to date, as well as proposed future project tasks.

The Commission has reviewed the application and the supplemental data and concludes United's Project SNG-Biomass is within the R.D. & D. Definition 28.B of the Uniform System of Accounts and that United's plan is adequate under the guidelines set forth in § 154.38(d)(5)(iii) of the Commission regulations.

The Commission orders:

(A) Actual expenditures associated with Project SNG-Biomass for the year ended May 31, 1978, shall be allowed in rates in accordance with § 154.38(d)(5)(v) of the Commission's regulations and Account 188 of the Commission's Uniform System of Accounts.

(B) The authorization granted in paragraph (A), above, is conditioned upon United's continued compliance with §§ 154.38(d)(5)(iii) and 154.38(d)(5)(iv) of the Commission's regulations.

(C) The State of Louisiana and Memphis Light, Gas and Water Division are permitted to intervene in this proceeding subject to the Commission's rules and regulations: *Provided, however,* That the participation of the intervenors shall be limited to matters affecting asserted rights and interests specifically set forth in the petitions to intervene: *And provided, further,* That the admission of such intervenors shall not be construed as recognition that they might be aggrieved by any order entered in this proceeding.

(D) The Secretary shall cause prompt publication of this order in the FEDERAL REGISTER.

By the Commission.

KENNETH F. PLUMB, *Secretary.*

[FR Doc. 78-25422 Filed 9-8-78; 8:45 am]

[5] Order No. 566, p. 31, *et seq.*

[6560-01]

ENVIRONMENTAL PROTECTION AGENCY

[FRL 960-7]

AIR QUALITY TECHNICAL DEMONSTRATION PROGRAM

Correction

AGENCY: Environmental Protection Agency.

ACTION: Notice of Competition for Grants: Correction.

SUMMARY: The "Summary" section of the original notice (43 FR 38926, Aug. 31, 1978), is amended to read as follows: "The following letters solicits indications of interest to participate in the Air Quality Technical Assistance Demonstration Program. It was sent on August 18, 1978 to mayors of cities with over 100,000 population within urbanized, nonattainment areas over 200,000 population."

EFFECTIVE DATE: September 11, 1978.

FOR FURTHER INFORMATION CONTACT:

Jerry Kurtzweg, Chief of Land Use Policy Branch, Office of Transportation and Land Use Policy, Environmental Protection Agency, 401 M Street SW., Washington, D.C. 20460, 202-755-0570.

Dated: September 1, 1978.

ROY N. GAMSE, *Acting Assistant Administrator for Planning and Management.*

[FR Doc. 78-25347 Filed 9-8-78; 8:45 am]

[6560-01]

[PF-101B; FRL 964-3]

PESTICIDE PROGRAMS

Pesticide and Food Additive Petitions Amendment; Correction

In FR Doc. 22164 appearing at page 35385 in the issue of August 9, 1978, second column, line 6, change the CFR citation to read "CFR Part 193.20".

Dated: September 5, 1978.

DOUGLAS D. CAMPT, *Acting Director, Registration Division.*

[FR Doc. 78-25548 Filed 9-8-78; 8:45 am]

[6560-01]

[FRL 963-7; OPP-33000/554]

RECEIPT OF APPLICATION FOR PESTICIDE REGISTRATION

Data To Be Considered in Support of Applications

On November 19, 1973, the Environmental Protection Agency (EPA) published in the FEDERAL REGISTER (39 FR 31862) its interim policy with respect to the administration of section 3(c)(1)(D) of the Federal Insecticide, Fungicide, and Rodenticide Act (FIFRA), as amended ("Interim Policy Statement"). On January 22, 1976, EPA published in the FEDERAL REGISTER a document entitled "Registration of a Pesticide Product—Consideration of Data by the Administrator in Support of an Application" (41 FR 3339). This document described the changes in the Agency's procedures for implementing section 3(c)(1)(D) of FIFRA, as set out in the Interim Policy Statement which were effected by the enactment of the amendments to FIFRA on November 28, 1975 (Pub. L. 94-140), and the regulations governing the registration and re-registration of pesticides which became effective on August 4, 1975 (40 CFR Part 162).

Pursuant to the procedures set forth in these FEDERAL REGISTER documents, EPA hereby gives notice of the applications for pesticide registration listed below. In some cases these applications have recently been received; in other cases, applications have been amended by the submission of additional supporting data, the election of a new method of support, or the submission of new "offer to pay" statements.

In the case of all applications, the labeling furnished by the applicant for the product will be available for inspection at the Environmental Protection Agency, Room 209, East Tower, 401 M Street SW., Washington, D.C. 20460. In the case of applications subject to the section 3 regulations which utilize either the 2(a) or 2(b) method of support specified in the Interim Policy Statement, all data citations submitted or referenced by the applicant in support of the application will be made available for inspection at the above address. This information (proposed labeling and, where applicable, data citations) will also be supplied by mail, upon request. However, such a request should be made only when circumstances make it inconvenient for

the inspection to be made at the Agency offices.

Any person who (a) is or has been an applicant, (b) believes that data he developed and submitted to EPA on or after January 1, 1970, are being used to support an application described in this notice, (c) desires to assert a claim under section 3(c)(1)(D) for such use of his data and wishes to preserve his right to have the Administrator determine the amount of reasonable compensation to which he is entitled for such use of the data, or (d) wishes to assert confidential status under section 10 for his data, must notify the Administrator and the applicant named in the notice in the FEDERAL REGISTER of his claim by certified mail. Notification to the Administrator should be addressed to the process Coordination Branch, Registration Division (TS-767), Office of Pesticide Programs, Environmental Protection Agency, 401 M Street SW., Washington, D.C. 20460. Every such claimant must include, at a minimum, the information listed in the Interim Policy Statement of November 19, 1973.

Specific questions concerning applications made to the Agency should be addressed to the designated Product Manager (PM), Registration Division (TS-767), Office of Pesticide Programs, at the above address, or by telephone as follows:

PM 12 and 16—202-755-9315;
PM 21 and 22—202-426-2454;
PM 24—202-755-2196;
PM 31 and 32—202-426-2635;
PM 15 and 17—202-426-9427;
PM 23—202-755-1397;
PM 25—202-426-2632.

The Interim Policy Statement requires that claims for compensation be filed on or before November 13, 1978. EPA will not delay any registration pending the assertion of claims for compensation or the determination of reasonable compensation. Inquiries and assertions that data relied upon are subject to protection under section 10 of FIFRA, as amended, should be made on or before October 11, 1978. Registration will be delayed pending resolution of section 10 claims.

Dated: September 5, 1978.

DOUGLAS D. CAMPT,
Acting Director,
Registration Division.

APPLICATION RECEIVED 33000/554

EPA File Symbol 70-EER. Rigo Co., Junction I-71 and Highway 146, Buckner, Ky. 40010. KILL-KO PREMGARD. Active Ingredients: (5-Benzyl-3-furyl)methyl 2,2-dimethyl-3-(2-methylpropenyl) cyclopropanecarboxylate 0.500 percent; Related compounds 0.063 percent; Aromatic Petroleum hydrocarbons 0.662 percent; Petroleum distillate 98.750 percent. Method of Support: Application proceeds under 2(b) of interim policy. PM17

EPA Reg. No. 100-523. CIBA-GEIGY Corp., P.O. Box 11422, Greensboro, N.C. 27409. TOLBAN 4E. Active Ingredients: Profluralin: *N*-(cyclopropylmethyl)-*α,α,α*-trifluoro-2,6-dinitro-*N*-propyl-*p*-toluidine 43.6 percent; Related compounds 1.9 percent. Method of Support: Application proceeds under 2(b) of interim policy. Republished: Amendment. PM24

EPA Reg. No. 100-590. CIBA-GEIGY Corp., BICP 4.5L HERBICIDE. Active Ingredients: Atrazine: 2-chloro-4-ethylamino-6-isopropylamino-s-triazine 20.8 percent; Atrazine related compounds 1.1 percent; Metolachlor: 2-chloro-*N*-(2-ethyl-6-methylphenyl)-*N*-(2-methoxyl-1-methylethyl) acetamide 27.5 percent. Method of Support: Application proceeds under 2(b) of interim policy. Republished: Added uses. PM24

EPA Reg. No. 239-2186. Chevron Chemical Co., Ortho Division, 940 Hensley Street, Richmond, Calif. 94804. ORTHO PARAQUAT CL. Active Ingredients: Paraquat dichloride (1,1'-dimethyl-4,4'-bipyridinium dichloride) 29.1 percent. Method of Support: Application proceeds under 2(b) of interim policy. Republished: Amendment. PM25

EPA File Symbol 264-GNL. Amchem Products, Inc., Brookside Avenue, Ambler, Pa. 19002. AMIBEN MICROSOL PREEMERGENCE HERBICIDE. Active Ingredients: Sodium salt of chloramben (3-amino-2,5-dichlorobenzoic acid) 84.6 percent; Sodium salts of related aminodichlorobenzoic acids 9.4 percent. Method of Support: Application proceeds under 2(a) of interim policy. PM25

EPA File Symbol 264-GNA. Amchem Products, Inc. AMCHEM AMIBEN PREEMERGENCE HERBICIDE. Active Ingredients: Sodium salt of chloramben (3-amino-2,5-dichlorobenzoic acid) 21.0 percent; Sodium salts of related aminodichlorobenzoic acids 2.3 percent. Method of Support: Application proceeds under 2(a) of interim policy. PM25

EPA File Symbol 270-RGU. Farnam Cos., Inc., 2230 East Magnolia Street, Phoenix, Ariz. 85036. WIPE II FLY PROTECTANT. Active Ingredients: N-(hydroxymethl)-1-cyclohexene-1,2-dicarboximide 2,2-dimethyl-3-(2-methylpropenyl) cyclopropanecarboxylate 0.21 percent; 3-phenoxybenzyl d-cis and trans 2,2-dimethyl-3-(2-methylpropenyl) cyclopropanecarboxylate 0.10 percent; Di-n-propyl Isocinchomeronate 1.00 percent; Butoxypolypropylene Glycol 20.00 percent. Method of Support: Application proceeds under 2(b) of interim policy. PM17

EPA File Symbol 270-RGL. Farnam Cos., Inc. FARNAM FLYING INSET KILLER. Active Ingredients: Tetramethrin [N-(hydroxymethyl)-1-cyclohyexene-1,2-dicarboximide 2,2-dimethyl-3-(2-methylpropenyl) cyclopropanecarboxylate] .250 percent; 3-Phenoxybenzyl d-cis and trans 2,2-dimethyl-3-(2-methylpropenyl) cyclopropanecarboxylate .143 percent; Other isomers.007 percent; Petroleum distillate 9.250 percent. Method of Support: Application proceeds under 2(b) of interim policy. PM17

EPA File Symbol 270-RGA. Farnam Cos., Inc. FARNAM INSECT KILLER, HOUSEHOLD INSECT KILLER. Active Ingredients: Tetramethrin [N-(hydroxymethyl)-1-cyclohexene-1,2-dicarboximide 2,2-dimethyl-3-(2-methylpropenyl) cyclopropanecarboxylate] .200 percent; 3-Phenoxybenzyl d-cis and trans 2,2-dimethyl-3-(2-methylpropenyl) cyclopropanecarboxylate .191 percent; Other isomers .009 percent: Petroleum distillate 9.250 percent. Method of Support: Application proceeds under 2(b) of interim policy. PM17

EPA File Symbol 270-RGT. Farnam Cos., Inc. FARNAM ANT POWDER, RESIDUAL ANT KILLER. Active Ingredients: (3-Phenoxyphenyl) methyl (±)-cis, trans-3-(2,2-dichloroethyl)-2,2-dimethylcyclopropanecarboxylate 0.5 percent. Method of Support: Application proceeds under 2(b) of interim policy. PM17

EPA Reg. No. 352-354. E. I. du Pont de Nemours & Co., Inc., Biochemicals Department, Wilmington, Del. 19898. DU PONT BENLATE BENOMYL FUNGICIDE WETTABLE POWDER. Active Ingredients: Benomyl [Methyl 1-(butylcarbamoyl)-2-benzimidazolecarbamate] 50 percent. Method of Support: Application proceeds under 2(b) of interim policy. Republished: Added uses. PM22

EPA File Symbol 421-UGN. James Varley & Sons, Inc., 1200 Switzer Avenue, St. Louis, Mo. 63147. AQUA KILL INSECTICIDE. Active Ingredients: Tetramethrin [N-(hydroxymethyl)- 1-cyclohexene-1,2-dicarboximide 2,2-dimethyl-3-(2-methylpropenyl) cyclopropanecarboxylate .250 percent; 3-Phenoxybenzyl d-cis and trans 2,2-dimethyl-3-(2-methylpropenzyl) cyclopropanecarboxylate .143 percent; Other isomers .007 percent; Petroleum distillate 9.25 percent. Method of Support: Application proceeds under 2(b) of the iterim policy. PM17

EPA File Symbol 498-RNT. Chase Products Co., 19th and Gardner Road, Broadview, Ill. 60153. SPRAYPAK FLYING INSECT FORMULA 2. Active Ingredients: Tetramethrin [N-(hydroxymethyl)-1-cyclohexene-1,2-dicarboximide 2,2-dimethyl-3-(2-methylpropenyl) cyclopropanecarboxylate] .250 percent; 3-phenoxybenzzyl d-cis and tras 2,2-dimethyl-3-(2-methylpropenyl) cyclopropanecarboxylate .143 percent; Other isomers .007 percent; Petroleum distillate 9.250 percent. Method of Support: Application proceeds under 2(b) of interim policy. PM17

EPA Reg. No. 524-308. Monsanto Co., 800 N. Lindbergh Boulevard, St. Louis, Mo. 63166. ROUNDUP HERBICIDE BY MONSANTO. Active Ingredients: Isopropylamine salt of glyphosate 41.0 percent. Method of Support: Application proceeds under 2(b) of interim policy. Republished: Added use. PM25

EPA Reg. No. 524-308. Monsanto Co., ROUNDUP HERBICIDE BY MONSANTO. Active Ingredients: Isopropylamine salt of glyphosate 39.9 percent. Method of Support: Application proceeds under 2(b) of interim policy. Republished: Formula change. PM25

EPA File Symbol 706-IG. Claire Manufacturing Co., 500 Vista Avenue, Addison, Ill. 60101. DOWN AND OUT FLYING AND CRAWLING INSECT KILLER. Active Ingredients: Tetramethrin [N-(hydroxymethyl)-1-cyclohexene-1,2-dicarboximide 2,2-dimethyl-3-(2-methylpropenyl) cyclopropanecarboxylate] 0.200 percent; 3-Phenoxybenzyl d-cis, trans 2,2-dimethyl-3-(2-methylpropenyl) cyclopropanecarboxylate 0.191 percent; Other isomers 0.009 percent; Petroleum distillate 9.250 percent. Method of Sup-

port: Application proceeds under 2(b) of interim policy. PM17

EPA File Symbol 706-IU. Claire Manufacturing Co., BROADCIDE FLYING AND CRAWLING INSECT KILLER. Active Ingredients: Tetramethrin [N-(hydroxymethyl)-1-cyclohexene-1,2-dicarboximide 2,2-dimethyl-3-)2-methylpropenyl) cyclopropanecarboxylate] 0.250 percent; 3-Phenoxybenzyl d-cis, trans 2,2-dimethyl-3-(2-methylpropenyl) cyclopropanecarboxylate 0.143 percent; Other isomers 0.007 percent; Petroleum distillate 9.250 percent. Method of Support: Application proceeds under 2(b) of interim policy. PM17

EPA File Symbol 875-TI. Diversey Chemicals, 1855 South Mountain Prospect Road, Des Plains, Ill. 60018. DIVERSIDE KS. Active Ingredients: (5-Benzyl-3-furyl)methyl 2,2-dimethyl-3-(2-methylpropenyl) cyclopropanecarboxylate 0.250 percent; Related compounds 0.034 percent; Aromatic petroleum hydrocarbons 0.331 percent; Petroleum distillate 99.375 percent. Method of Support: Application proceeds under 2(b) of interim policy. PM17

EPA Reg. No. 961-310. Lebanon Chemical Corp., P.O. Box 180, Lebanon, Pa. 17042. LEBANON 1-2-3. Active Ingredients: Dimethyl tetrachloroterphthalate 4.87 percent. Method of Support: Application proceeds under 2(a) of interim policy. Republished: Amendment. PM23

EPA Reg. No. 1016-78. Union Carbide Corp., Agriculture Products Division, 7825 Bay Meadows Way, Jacksonville, Fla. 32216. TEMIK ALDICARB PESTICIDE 15 PERCENT GRANULAR. Activer Ingredients: Aldicarb [2-methyl-2(methylthio) propionaldehyde-O-(methylcarbamoyl)oxime] 15 percent. Method of Support: Application proceeds under 2(b) of interim policy. Republished: Added use. PM12

[FR Doc. 78-25556 Filed 9-8-78; 8:45 am]

[6560-01]

[FRL 963-8; OPP-33000/553]

RECEIPT OF APPLICATION FOR PESTICIDE REGISTRATION

Data To Be Considered in Support of Applications

On November 19, 1973, the Environmental Protection Agency (EPA) published in the FEDERAL REGISTER (39 FR 31862) its interim policy with respect to the administration of section 3(c)(1)(D) of the Federal Insecticide, Fungicide, and Rodenticide Act (FIFRA), as amended ("Interim Policy Statement"). On January 22, 1976, EPA published in the FEDERAL REGISTER a document entitled "Registration of a Pesticide Product—Consideration of Data by the Administrator in Support of an Application" (41 FR 3339). This document described the changes in the Agency's procedures for implementing section 3(c)(1)(D) of FIFRA, as set out in the Interim Policy Statement which were effected by the enactment of the amendments to FIFRA on November 28, 1975 (Pub. L. 94-140), and the regulations governing the registration and re-registration of pesticides which became effective on August 4, 1975 (40 CFR Part 162).

Pursuant to the procedures set forth in these FEDERAL REGISTER documents, EPA hereby gives notice of the applications for pesticide registration listed below. In some cases these applications have recently been received; in other cases, applications have been amended by the submission of additional supporting data, the election of a new method of support, or the submission of new "offer to pay" statements.

In the case of all applications, the labeling furnished by the applicant for the product will be available for inspection at the Environmental Protection Agency, Room 209, East Tower, 401 M Street SW., Washington, D.C. 20460. In the case of applications subject to the section 3 regulations which utilize either the 2(a) or 2(b) method of support specified in the Interim Policy Statement, all data citations submitted or referenced by the applicant in support of the application will be made available for inspection at the above address. This information (proposed labeling and, where applicable, data citations) will also be supplied by mail, upon request. However, such a request should be made only when circumstances make it inconvenient for the inspection to be made at the Agency offices.

Any person who (a) is or has been an applicant, (b) believes that data he developed and submitted to EPA on or after January 1, 1970, are being used to support an application described in this notice, (c) desires to assert a claim under section 3(c)(1)(D) for such use of his data and wishes to preserve his right to have the administrator determine the amount of reasonable compensation to which he is entitled for such use of the data, or (d) wishes to assert confidential status under section 10 for his data, must notify the Administrator and the applicant named in the notice in the FEDERAL REGISTER of his claim by certified mail. Notification to the Administrator should be addressed to the Process Coordination Branch, Registration Division (TS-767), Office of Pesticide Programs, Environmental Protection Agency, 401 M Street SW., Washington, D.C. 20460. Every such claimant must include, at a minimum, the information listed in the Interim Policy Statement of November 19, 1973.

Specific questions concerning applications made to the Agency should be addressed to the designated Product Manager (PM), Registration Division (TS-767), Office of Pesticide Programs, at the above address, or by telephone as follows:

PM 12 and 16—202/755-9315
PM 21 and 22—202/426-2454
PM 24—202/755-2196
PM 31 and 32—202/426-2635
PM 15 and 17—202/426-9427
PM 23—202/755-1397
PM 25—202/426-2832

The Interim Policy Statement requires that claims for compensation be filed on or before November 13, 1978. EPA will not delay any registration pending the assertion of claims for compensation or the determination of reasonable compensation. Inquiries and assertions that data relied upon are subject to protection under section 10 of FIFRA, as amended, should be made on or before October 11, 1978. Registration will be delayed pending resolution of section 10 claims.

Dated: September 5, 1978.

DOUGLAS D. CAMPT,
Acting Director,
Registration Division.

APPLICATION RECEIVED 33000/553

EPA File Symbol 70-EEE. Rigo Co., Junction I-71 and Highway 146, Buckner, Ky. 40010. PYRETHERM. Active Ingredients: (5-Benzyl-3-furyl) methyl 2,2-dimethyl-3-(2-methylpropenyl) cyclopropanecarboxylate 0.250 percent; Related compounds 0.034 percent; Aromatic petroleum hydrocarbons 0.331 percent; Petroleum distillate 99.375 percent. Method of Support: Application proceeds under 2(b) of interim policy. PM17

EPA Reg. No. 239-2404. Chevron Chemical Co., 940 Hensley Street, Richmond, Calif. 94804. ORTHO MONITOR 4 SPRAY (INSECTICIDE). Active Ingredients: O,S-dimethyl phosphoramidothioate 40.0 percent. Method of Support: Application proceeds under 2(b) of interim policy. Republished: Added use. PM16

EPA Reg. No. 264-138. Amchem Products, Inc., Brookside Avenue, Ambler, Pa. 19002. AMIBEN PREEMERGENCE HERBICIDE. Active Ingredients: Ammonium salt of chloramben (3-amino-2,5-dichlorobenzoic acid) 21.1 percent; Ammonium salts of related aminodichlorobenzoic acids 2.3 percent. Method of Support: Application proceeds under 2(b) of interim policy. Republished: Amendment. PM25

EPA File Symbol 239-ENL. C. J. Martin Co., P.O. Box 1039, Nacogdoches, Tex. 75961. DIPEL WP BACILLUS THURINGIENSIS. Active Ingredients: *Bacillus thuringiensis*, Berliner, 4320 International Units of potency per milligram (1.96 billion International Units per pound). Method of Support: Application proceeds under 2(b) of interim policy. PM17

EPA File Symbol 407-GOT. Imperial Inc., P.O. Box 423, Shenandoah, Iowa 51601. IMPERIAL DURSBAN ½ G GRANULAR INSECTICIDE. Active Ingredients: Chlorpyrifos [0,0-diethyl 0-(3,5,6-trichloro-2-pyridyl) phosphorothioate] 0.5 percent. Method of Support: Application proceeds under 2(b) of interim policy. PM12

EPA File Symbol 523-IL. Roberts Laboratories, P.O. Box 7532, Rockford, Ill. 61103. ROBERTS SYNTOX TM FOOD PLANT SPRAY. Active Ingredients: (5-Benzyl-3-furyl) methyl 2,2-dimethyl-3-(2-methylpropenyl) cyclopropanecarboxylate 0.250 percent; Related compounds 0.034 percent; Aromatic petroleum hydrocarbons 0.331 percent; Petroleum distillate 99.375

percent. Method of Support: Application proceeds under 2(b) of interim policy. PM17

EPA Reg. No. 675-37. National Laboratories, Lehn & Fink Industrial Products Division of Sterling Drug, Inc., 225 Summit Avenue, Montvale, N.J. 07645. LF-200 DISINFECTANT-DETERGENT-DEODORANT. Active Ingredients: Potassium 0-benzyl-p-chlorophenate 9.4 percent; Isopropyl alcohol 4.2 percent; Sodium dodecylbenzene sulfonate 3.9 percent; Potassium 0-phenylphenate 2.9 percent; Tetrasodium ethylenediamine tetraacetate 2.4 percent. Method of Support: Application proceeds under 2(b) of interim policy. Republished: Added use. PM32

EPA File Symbol 1021-RGII. McLaughlin, Gormley, King Co., 8810 Tenth Avenue, North, Minneapolis, Minn. 55427. MGK PYNAMIN FORTE CONCENTRATE 90 percent; Active Ingredients: d-cis, trans Allethrin (allyl homolog of Cinerin I) 86.00 percent; Other isomers (allyl homolog of Cinerin I) 4.00 percent. Method of Support: Application proceeds under 2(b) of interim policy. PM17

EPA File Symbol 1021-RGIO. McLaughlin, Gormley, King Co. NEO-PYNAMIN, TECHNICAL. Active Ingredients: Tetramethrin [N-(hydroxymethyl)-1-cyclohexene-1,2-dicarboximide 2,2-dimethyl-3-(2-methylpropenyl) cyclopropanecarboxylate] 90.00 percent. Method of Support: Application proceeds under 2(b) of interim policy. PM17

EPA File Symbol 1029-RRL. Aidex Corp., 1024 North 17th Street, Omaha, Nebr. 68102. SANAMINE. Active Ingredients: n-Alkyl (50 percent C14, 40 percent C12, 10 percent C16) dimethyl benzyl ammonium chlorides 10.00 percent. Method of Support: Application proceeds under 2(b) of interim policy. PM31

EPA Reg. No. 1159-181. Seacoast Laboratories, Inc., 257 Highway 18, East Brunswick, N.J. 08816. TWIN LIGHT PROFESSIONAL DURSBAN LAWN INSECT KILLER. Active Ingredients: Chlorpyrifos [0,0-diethyl 0-(3,5,6-trichloro-2-pyridyl) phosphorothioate] 2.32 percent; Aromatic petroleum derivative solvent 1.30 percent. Method of Support: Application proceeds under 2(b) of interim policy. Republished: Amendment. PM12

EPA File Symbol 1624-RRG. U.S. Borax & Chemical Corp., 3075 Wilshire Boulevard, Los Angeles, Calif. 90010. 20 MULE POWER INDUSTRIAL STRENGTH BATHROOM CLEANER. Active Ingredients: Tetrasodium ethylenediaminetetraacetate 4.56 percent; Isopropanol 2.40 percent; 0-Benzyl-p-chlorophenol 0.145 percent. Method of Support: Application proceeds under 2(a) of interim policy. PM32

EPA File Symbol 1685-IU. State Chemical Manufacturing Co., 3100 Hamilton Avenue, Cleveland, Ohio 44114. FORMULA 64-B VAPORCIDE. Active Ingredients: (5-Benzyl-3-furyl) Methyl 2,2-dimethyl-3-(2-methylpropenyl) cyclopropanecarboxylate 0.250 percent; Related compounds 0.034 percent; Aromatic petroleum hydrocarbons 0.331 percent; Petroleum distillate 99.375 percent. Method of Support: Applicationproceeds under 2(b) of interim policy. PM17

EPA File Symbol 1771-0. Samuel Halaby Co., 482 Clinton Avenue, South, Rochester, N.Y. 14620. ATTACK 25. Active Ingredients: (5-Benzyl-3-furyl) methyl 2,2-dimethyl-3-(2-methylpropenyl) cyclopropanecarboxylate 0.250 percent; Related compounds 0.034 percent; Aromatic petroleum hydrocarbons 0.331 percent; Petroleum distillate 99.375 percent. Method of Support: Application proceeds under 2(b) of interim policy. PM17

EPA File Symbol 2019-GE. Gaston Johnston Corp., 24-64 45th Street, Long Island City, N.Y. 11103. HADABUG II QUALITY INSECT SPRAY. Active Ingredients: [N-(hydroxymethyl)-1-cyclohexene-1,2 -dicarboximide 2,2-dimethyl-3-(2-methylpropenyl) cyclopropanecarboxylate] .250 percent; 3-Phenoxybenzyl d-cis and trans 2,2-dimethyl-3-(2-methylpropenyl) cyclopropanecarboxylate .143 percent; Other isomers .007 percent; Petroleum distillate 9.250 percent. method of Support: Application proceeds under 2(b) of interim policy. PM17

EPA File Symbol 2175-T. Three-M Supply Co., 1215 East Columbia Street, Seattle, Wash. 98122. MERICIDE B.C.P. No. 1. Active Ingredients: Poly[oxyethylene (dimethyliminio) ethylene-(dimethyliminio) ethylene dichloride] 10.0 percent. Method of Support: Application proceeds under 2(b) of interim policy. PM34

EPA File Symbol 2175-L. Three-M Supply Co. MERICIDE B.C.P. No. 2. Active Ingredients: Poly[oxyethylene (dimethyliminio) ethylene-(dimethyliminio) ethylene dichloride] 20.0 percent. Method of Support: Application proceeds under 2(b) of interim policy. PM34

EPA Reg. No. 2724-275. Zoecon Industries, 12200 Denton Drive, Dallas, Tex. 75234. PROPOXUR FLEA COLLAR RF-101 FOR CATS. Active Ingredients: 0-Isopropoxyphenol methylcarbamate 9.4 percent. Method of Support: Application proceeds under 2(a) of interim policy. Republished: Amendment. PM12

EPA File Symbol 2986-G. The Bushnell Co., Inc., 1760 Eleanor Avenue, St. Paul, Minn. 55116. APEX 15. Active Ingredients: Sodium Hypochlorite 12.5 percent. Method of Support: Application proceeds under 2(b) of interim policy. PM34

EPA Reg. No. 3125-277. Chemagro Agricultural Division, Mobay Chemical Corp., Box 4913, Kansas City, Mo. 64120. SENCOR 50 PERCENT WETTABLE POWDER HERBICIDE. Active Ingredients: 4-Amino-6-(1,1-dimethylethyl)-3-(methylthio)-1,2,4-triazin-5(4H)-one 50 percent. Method of Support: Application proceeds under 2(b) of interim policy. Republished: Amendment. PM25

EPA Reg. No. 3125-314. Chemagro Agricultural Division, Mobay Chemical Corp. SENCOR 4 FLOWABLE HERBICIDE. Active Ingredients: 4-Amino-6-(1,1-dimethylethyl)-3-(methylthio)-1,2,4-triazin-5(4H)-one 41 percent. Method of Support: Application proceeds under 2(b) of interim policy. Republished: Added use. PM25

EPA File Symbol 3286-LN. Ferd Staffel Co., Box 2380, San Antonio, Tex. 78298. STAFFEL'S SPECIAL LAWN FOOD 15-10-10 FERTILIZER-INSECTICIDE. Active Ingredients: Chlorpyrifos (0,0-diethyl-0-(3,5,6-Trichloro-2-pyridyl) phosphorothioate) 0.3 percent. Method of Support: Application proceeds under 2(b) of interim policy. PM12

EPA File Symbol 3772-UUU. Earl May Seed & Nursery Co., Imperial Inc., P.O. Box 423, Shenandoah, Iowa 51601. EARL MAY DURSBAN ½ G GRANULAR INSECTICIDE. Active Ingredients: Chlorpyrifos [0,0-diethyl 0-(3,5,6-trichloro-2-pyridyl) phosphorothioate] 0.5 percent. Method of Support: Application proceeds under 2(b) of interim policy. PM12

EPA File Symbol 4000-TE. Southern Chemical Products Co., P.O. Box 205, Macon, Ga. 31202. NO. 90 SPACE SPRAY. Active Ingredients: (5-Benzyl-3-furyl)methyl 2,2-dimethyl-3-(2-methylpropenyl) cyclopropanecarboxylate 0.100 percent; Related compounds 0.014 percent; Aromatic petroleum hydrocarbons 0.132 percent; Petroleum distillate 99.750 percent. Method of Support: Application proceeds under 2(b) of interim policy. PM17

EPA File Symbol 5870-EG. Texco Corp., 2801 Highland Avenue, Cincinnati, Ohio 45212. TEXCO HOSPITAL DISINFECTANT CLEANER. Active Ingredients: n-Alkyl (60 percent C14, 30 percent C16, 5 percent C12, 5 percent C18) dimethyl benzyl ammonium chlorides 6.25 percent; Tetrasodium ethylenediamine tetraacetate 3.60 percent. Method of Support: Application proceeds under 2(b) of interim policy. Republished: Revised offer to pay. PM31

EPA File Symbol 5887-RRG. Black Leaf Products Co., 667 North State Street, Elgin, Ill. 60120. BLACK LEAF ROACH AND ANT KILLER. Active Ingredients: (5-Benzyl-3-furly)methyl 2,2-dimethyl-3-(2-methylpropenly) cyclopropanecarboxylate 0.350 percent; Related compounds 0.048 percent. Method of Support: Application proceeds under 2(b) of interim policy. PM17

EPA Reg. No. 6720-102. Southern Mill Creek Products Co., Inc., P.O. Box 1098, Tampa, Fla. 33601. SMCP PARA BLOX (CEREAL AND MOLASSES). Active Ingredients: Diphacinone (2-diphenlacetyl-1,3-indandione) 0.005 percent. Method of Support: Application proceeds under 2(a) of interim policy. PM11

EPA Reg. No. 6720-155. Southern Mill Creek Products Co., Inc. SMCP BLOX COMMERCIAL SIZE (CEREAL AND MOLASSES). Active Ingredients: Diphacinone (2-diphenylacetyl-1,3-indandione) 0.0005 percent. Method of Support: Application proceeds under 2(a) of interim policy. PM11

EPA Reg. No. 7173-113. Chempar Chemical Co., Inc., 260 Madison Avenue, New York, N.Y. 10016. ROZOL TRACKING POWDER FOR MICE AND RATS. Active Ingredients: 2-[(p-chlorophenyl) phenylacetyl]-1,3-indandione 0.2 percent. Method of Support: Application proceeds under 2(b) of interim policy. Republished: Added use. PM11

EPA File Symbol 7254-0. Hachkik Bleach Co., 50th and Wynnefield Avenue, Philadelphia, Pa. 19131. HACHIK CHLOR. Active Ingredients: Sodium Hypochlorite 12.5 percent. Method of Support: Application proceeds under 2(b) of interim policy. PM32

EPA File Symbol 7273-RAN. Crown Chemicals, P.O. Box 7532, Rockford, Ill. 61103. CROWN SYNTOX FOOD PLANT, MILL AND DAIRY ROOM SPRAY READY-TO-USE. Active Ingredients: (5-Benzyl-3-furyl)methyl 2,2-dimethyl-3-(2-methylpropenyl) cyclopropanecarboxylate 0.250 percent; Related compounds 0.034 percent; Aromatic petroleum hydrocarbons 0.331 percent; Petroleum distillate 99.375 percent. Method of Support: Application proceeds under 2(b) of interim policy. PM17

EPA File Symbol 7368-UL. Georgia-Pacific Corp., 100 Dove Street, Suite 200, Los Angeles, Calif. 90040. GEORGIA-PACIFIC FLYING INSECT KILLER FOR INDUSTRIAL USE. Active Ingredients: Tetramethrin [N-(hydroxymethyl)-1-cyclohexene-1,2-dicarboximide 2,2-dimethyl-3-d-cis and trans 2,2-dimethyl-3-(2-methylpropenyl) cyclopropanecarboxylate. 143 percent; Other isomers .007 percent; Petroleum distillate 9.250 percent. Method of Support: Application proceeds under 2(b) of interim policy. PM17

EPA File Symbol 7368-UA. Georgia-Pacific Corp. GEORGIA-PACIFIC HOUSEHOLD INSECT KILLER FOR HOUSEHOLD USE. Active Ingedients: Tetramethrin[N-(hydroxymethyl) - 1 - cyclohexene - 1,2-dicarboximide 2,2-dimethyl-3-(2-methylpropenyl) cyclopropanecarboxylate] .200 percent; 3-Phenoxybenzly d-cis and trans 2,2 - dimethyl - 3 - (2-methylpropenyl) cyclopropanecarboxylate .191 percent; Other isomers .009 percent; Petroleum distillate 9.250 percent. Method of Support: Application proceeds under 2(b) of interim policy. PM17

EPA File Symbol 9143-AN. Chemscope Corp., 3200 East Randol Mill Road, Arlington, Tex. 76011. CHEMSCOPE SWAT FLYING INSECT KILLER. Active Ingredients: Tetramethrin[N-(hydroxymethyl)-1-cyclohexene-1,2-dicarboximide 2,2-dimethyl-3-(2-methylpropenyl) cyclopro - panecarboxylate .250 percent; 3-Phenoxybenzyl d-cis and trans 2,2-dimethyl-3-(2-methylpropenyl) cyclopropanecarboxylate] .143 percent; Other isomers .007 percent; Petroleum distillate 9.250 percent. method of Support: Application proceeds under 2(b) of interim policy. PM17

EPA File Symbol 9143-AR. Chemscope Corp. X-PEL INSECT KILLER. Active Ingredients: Tetramethrin[N-(hydroxymethyl)-1-cyclohexene-1,2-dicarboximide 2,2-dimethyl-3-d-cis and trans 2,2-di/methyl - 3 - (2 - methylpropenyl) cyclopropanecarboxylate .191 percent; Other isomers .009 percent; Petroleum distillate 9.250 percent. Method of Support: Application proceeds under 2(b) of interim policy. PM17

EPA File Symbol 9613-0. Bison Laboratories, Inc., Buffalo, N.Y. 14211. CRYSTAL-AQUA CHLORINATING SOLUTION. Active Ingredients: Sodium Hypochlorite 12.5 percent. Method of Support: Application proceeds under 2(b) of interim policy. PM32

EPA File Symbol 9767-RR, Cal-Tek Industries, 1833 North Eastern Avenue, Los Angeles, Calif. 90032. STEAMITE-QD. Active Ingredients: n-Alkyl (60 percent C14, 30 percent C16, 5 percent C12, 5 percent C18) dimethyl benzyl ammonium chlorides 2.25 percent; n-Alkyl (68 percent C12, 32 percent C14) dimethyl ethylbenzyl ammonium chlorides 2.25 percent; Sodium Carbonate 3.00 percent. Method of Support: Application proceeds under 2(b) of interim policy. Republished: Revised offer to pay. PM31

[FR Doc. 78-25557 Filed 9-8-78; 8:45 am]

[6560-01]

[FRL 963-3]

RESOURCE CONSERVATION COMMITTEE

Meeting

The Resource Conservation Committee staff holds informal discussion forums on the second Tuesday of each month. The forum provides interested parties with the opportunity to participate in the Committee's study of a wide range of proposals aimed at improving the use of materials in the United States. These informal discussions are in addition to the formal public meetings that have been held by the Committee.

The schedule of meetings for the remainder of 1978 is as follows:

October 10, 1978, 10:30 a.m. to 12 m., room 2117.

November 14, 1978, 10:30 a.m. to 12 m., room 2117.

December 12, 1978, 10:30 a.m. to 12 m., room 2117.

All meetings will be held at the Environmental Protection Agency, 401 M Street SW., Washington, D.C. For further information please call 202-755-9145.

The objective of these sessions is to provide an opportunity for the exchange of ideas relating to resource conservation between interested parties. As such, the format will be informal and provide for discussion rather than formal statements. No official record will be maintained. Participants are encouraged to propose innovative policy options for discussion.

The Resource Conservation Committee is the interagency committee set up under section 8002(j) of the Resource Conservation and Recovery Act (Pub. L. 94-580). The Committee is chaired by EPA Administrator Douglas Costle and includes the Secretaries of Commerce, Labor, Interior, Treasury, and Energy; the Chairman of the Council on Environmental Quality and the Council of Economic Advisers; and the Director of the Office of Management and Budget. The Committee will make recommendations to the President and the Congress on the desirability and possible design of policy options including solid waste disposal charges, beverage container deposits, resource conservation subsidies, direct product regulation, local solid waste user fees, and other policy proposals. They would like to include the public in the decision-making process and are soliciting views of these potential legislative initiatives.

Dated: September 6, 1978.

BARBARA BLUM,
Deputy Administrator,
Environmental Protection Agency.

[FR Doc. 78-25554 Filed 9-8-78; 8:45 am]

[6712-01]

FEDERAL COMMUNICATIONS COMMISSION

[BC Docket No. 78-254; File No. BR-2162; BC Docket No. 78-255; File No. BRH-742]

BLAIR COUNTY BROADCASTERS, INC.

Renewal of License; Designating Applications for Consolidated Hearing on Stated Issues; Correction

Released: August 23, 1978.

In the Memorandum Opinion and Order released August 22, 1978, FCC 78-613 (Mimeo No. 94106), and published at 43 FR 38093, Friday, August 25, 1978, the "Docket Nos. BC Docket No. 254 and BC Docket No 255" in the caption should be corrected to read "BC Docket No. 78-254 and BC Docket No. 78-255."

FEDERAL COMMUNICATIONS COMMISSION,
WILLIAM J. TRICARICO,
Secretary.

[FR Doc. 78-25499 Filed 9-8-78; 8:45 am]

[6712-01]

[SS Docket Nos. 78-278-78-281]

CHARLES S. CASE, SR., ET AL

Order To Show Cause, Suspension and Designation Order, Designating Application For Hearing on Stated Issues

Adopted: August 31, 1978.

Released: September 5, 1978.

In the matters of revocation of license of Charles S. Case, Sr., 801 Glengarry Drive, Fairdale, Ky. 40118, SS Docket No. 78-278, Licensee of Station KZS-7387 in the Citizens Band Radio Service; Revocation of license of Charles S. Case, Sr., 801 Glengarry Drive, Fairdale, Ky. 40118, SS Docket No. 78-279, Licensee of Station WD4001 in the Amateur Radio Service; Suspension of license of Charles S. Case, Sr., 801 Glengarry Drive, Fairdale, Ky. 40118, SS Docket No. 78-280, Amateur Novice Class Radio Operator Licensee; Application of Charles S. Case, Sr., 801 Glengarry Drive, Fairdale, Ky. 40118 SS Docket No. 78-281, for Technician Class Amateur Operator License.

The Chief, Safety and Special Radio Services Bureau, has under consideration the Amateur radio station and operator licenses and the Citizens Band Radio Service license of Charles S. Case, Sr. The Amateur licenses were granted for a two year term to end on January 17, 1980. The Citizens Band license was granted for a five year term to end on December 29, 1980. Also under consideration is an applica-

tion for a Technician Class Amateur operator license filed by Case.

1. Information before the Commission indicates that on January 13, 1978, Case operated radio transmitting equipment on the frequency 27.505 MHz. That frequency was not one of those authorized by § 95.455(a) of the Commission's rules for use by stations in the Citizens Band Radio Service.[1][2] The frequency 27.505 MHz is allocated for use in the Industrial Radio Service.

2. The Commission's information further indicates that on January 13, 1978, Citizens Band radio station KZS-7387 was operated without being identified by its assigned call sign. Section 95.471(c) of the Commission's Rules required that transmissions by Citizens Band radio stations be identified by the station's call sign at the beginning and conclusion of each transmission or series of transmissions, but at least at intervals not to exceed ten minutes.

3. The information further indicates that on January 13, 1978, the communications from Citizens Band radio station KZS-7387 were transmitted in excess of five minutes. Section 95.469(b) of the Commissions's rules limited CB communications to periods of five continuous minutes, at the end of which a one minute silent period was required.

4. The information before the Commission further indicates that Case apparently used the designation "15W936" for identification. The use of the designation "15W936" demonstrates that Case apparently participated in "W", or "Whiskey" Clubs, whose members operated radio transmitting equipment on frequencies not authorized by their licenses and used equipment not type-accepted by the Commission for use by CB stations. Members of "Whiskey" Clubs apparently employed a system of operator identification numbers in lieu of Commission assigned call signs to enable members to identify each other over the air while concealing their identity and station location from the Commission.

5. This conduct was the subject of an Official Notice of Violation which was mailed to Case on February 9, 1978.

6. Section 312(a)(4) of the Communications Act of 1934, as amended, provides that radio station licenses may be revoked for wilful or repeated violation of the Commission's rules. Although the alleged violations relate only to the Citizens Band radio station, they may reflect adversely not only upon Case's qualifications to retain his Amateur radio station and operator license and to upgrade his Amateur operating privileges.

7. *Accordingly, it is ordered,* Pursuant to Section 312(a)(4) and (c) of the Communications Act of 1934, as amended, and § 0.331 of the Commission's rules, that Case show cause why the licenses for the captioned radio stations should not be revoked, and appear and give evidence at a hearing to be held at a time and place before an Administrative Law Judge, to be specified by a subsequent order, upon the following issues:

(a) Whether Case operated radio equipment in wilful or repeated violation of § 95.455(a) and/or 95.469(b) of the Commission's rules.

(b) Whether Case operated radio equipment in wilful or repeated violation of § 95.471(c) of the Commission's rules and/or used a club designator number for identification.

(c) Whether, in light of the evidence adduced pursuant to Issues (a) and (b), Charles S. Case, Sr., possesses the requisite qualifications to remain a Commission licensee.

8. Section 303(m)(1)(A) of the Communications Act of 1934, as amended, gives the Commission authority to suspend the operator license of any licensee who has violated any provision of the Communications Act or the Commission's rules. *Therefore, it is further ordered,* Under authority contained in Section 303(m)(1)(A) of the Communications Act and § 0.331 of the Commission's rules, that the Novice Class Amateur. Operator license of Charles S. Case, Sr., is suspended for the remainder of the license term.

9. *It is further ordered,* That, in order to obtain a hearing on the suspension matter, Case shall, within 30 days after receipt of the suspension order, make a written request for a hearing, whereupon the suspension will be held in abeyance until the conclusion of the proceedings on the suspension; and that if Case elects not to make such a request, he shall mail his Amateur Radio Operator license to the Commission in Washington, D.C., before the expiration of thirty days.[3]

10. *It is further ordered,* That, pursuant to Section 309(e) of the Communications Act and §§ 1.973(b) and 0.331 of the rules, Case's application for Technician Class Amateur radio operator license is designated for hearing, at a time and place to be specified by a subsequent Order upon the preceding issues and following issue:

(d) Whether, in light of the evidence adduced under Issues (a), (b) and (c) above, the public interest, convenience and necessity would be served by a grant of the Technician Class radio operator license application of Charles S. Case, Sr.

11. *It is further ordered,* That in order to obtain a hearing on the application, Case, in person or by attorney, shall within 30 days of the mailing of this Order, file with the Commission in triplicate a written appearance stating an intent to appear on a date fixed for hearing to present evidence on the issues specified in the foregoing paragraph.[4] Failure to file a written appearance within the time specified will result in the dismissal of the application with prejudice.

12. *It is further ordered,* That the burden of proceeding with the introduction of evidence and the burden of proof for revocation of the Amateur station license (SS Docket No. 78-279), the CB station license (SS Docket No. 78-278) and the Suspension is on the Bureau pursuant to Section 312(d) of the Communications Act; and the burden of proof for grant of the application (SS Docket No. 78-281) is on the respondent, pursuant to Section 309(e) of the Act.

13. *It is further ordered,* Pursuant to § 1.227 of the Commission's rules, that the proceedings on the above-stated issues regarding the Order to Show Cause, Suspension and Designation are consolidated for hearing.

14. *It is further ordered,* That a copy of this Order shall be sent by Certified Mail—Return Receipt Requested and by Regular Mail to the licensee at his address of record as shown in the caption.

Chief, Safety and Special Radio Services Bureau.

GERALD M. ZUCKERMAN,
Chief, Legal, Advisory and Enforcement Division.

ENCLOSURE 1

REPLY TO ORDER TO SHOW CAUSE WHY CITIZENS BAND RADIO STATION LICENSE KZ-7387 SHOULD NOT BE REVOKED

[SS Docket No. 78-278]

In this matter, Respondent takes the action indicated below:

☐ 1. Respondent will appear and present evidence at the hearing.

☐ 2. Respondent waives his right to a hearing and does not submit a written statement.

☐ 3. Respondent waives his right to a hearing and submit the attached written statement.*

REPLY TO ORDER TO SHOW CAUSE WHY AMATEUR RADIO STATION LICENSE WD4001 SHOULD NOT BE REVOKED

[SS Docket No. 78-279]

In this matter, Respondent takes the action indicated below:

[1] On the date of the violations (January 13, 1978), Case was licensed to operate in the Citizens Band Radio Service. On January 17, 1978, Case was granted an Amateur radio station license and a Novice Class Operator license. Accordingly, the alleged rule violations cited herein solely pertain to the Citizens Band Radio Service.

[2] Effective August 1, 1978, Subpart D of Part 95 of the Commission's Rules was revised. As part of that revision, all Rule sections in that Subpart were renumbered. Rule sections referred to in this Order to Show Cause are those which were in effect on the date of operation.

[3] The 15 day time period specified by Section 1.85 of the Rules is waived.

[4] The 20 day time period specified by § 1.221 of the rules is waived.

☐ 1. Respondent will appear and present evidence at the hearing.

☐ 2. Respondent waives his right to a hearing and does not submit a written statement.

☐ 3. Respondent waives his right to a hearing and submit the attached written statement.*

REPLY TO ORDER SUSPENDING AMATEUR NOVICE CLASS OPERATOR LICENSE

[SS Docket No. 78-280]

In this matter, Respondent takes the action indicated below:

☐ 1. Respondent will appear at a hearing on the suspension order.

☐ 2. Respondent does not desire a hearing on the suspension order, and encloses his Amateur Radio Operator license to be held by the Commission for the duration of the suspension.

Date:——— 1978.

CHARLES S. CASE, SR.,
Respondent.

REPLY TO ORDER DESIGNATING TECHNICIAN CLASS RADIO OPERATOR LICENSE APPLICATION FOR HEARING

[SS Docket No. 78-281]

In this matter, Respondent takes the action indicated below:

☐ 1. Respondent will appear at a hearing and present evidence on the issues specified in the order of designation.

☐ 2. Respondent will not present evidence on the issues specified in the order of designation and understands that as a result his application will be dismissed with prejudice.

Date:——— 1978.

CHARLES S. CASE, SR.,
Respondent.

ENCLOSURE 2

EXPLANATION OF PROCEDURES

1. *Revocation.* Section 1.91 of the Commission's Rules provides that in order to have a hearing before an Administrative Law Judge, you have 30 days from the Issue date of this Order in which to state that you will appear and present evidence on the matters specified in the Order. If you are unable to appear at a hearing in Washington, D.C., you may request that the hearing by near your residence. Such request should be supported by whatever facts you feel necessary.

Your right to a hearing is waived if you (1) fail to file a timely appearance or (2) file within 30 days a statement waiving the right to a hearing. When hearing is waived, you may submit a statement denying or seeking to mitigate or justify the matter alleged in the Order to Show Cause. The Chief Administrative Law Judge will then certify the case to the Commission. The matter will be handled by the Chief, Safety and Special Radio Services Bureau, who will determine whether a revocation order should be issued or the matter should be dismissed. This determination will be made using all information available, including statements you have filed and your past violation record.

2. *Suspension.* If you want a hearing on the suspension you have 30 days from the Issue date in which to request it in writing. Section 1.85 of the Rules provides that if you have a hearing, the suspension will be held in abeyance until the conclusion of the proceedings. If you do not want a hearing, the suspension will go into effect in 30 days, and during that 30 days you must send your operator license to the Commission to hold during the suspension.

3. *Application.* In order to have a hearing on your application, you have 30 days from the Issue date of this Order to request it. Section 1.221(c) of the rules provides that if you do not request a hearing, the application will be dismissed with prejudice.

[FR Doc. 78-25493 Filed 9-8-78; 8:45 am]

[6712-01]

[SS Docket No. 78-276]

MAXIE LYNN ELLIOTT

Designation Order Designating Application for Hearing on Stated Issues

Adopted: August 30, 1978.

Released: August 31, 1978.

In the matter of application of Maxie Lynn Elliott, 626 Goodson Drive, Columbus, Ga. 31907, SS Docket No. 78-276, For Citizens Band Radio Service License.

The Chief, Safety and Special Radio Services Bureau, pursuant to delegated authority, has under consideration the application of Maxie Lynn Elliott for a license in the Citizens Band Radio Service.

1. Elliott is the former licensee of Citizens Band radio station KTS-4404, which was canceled pursuant to Elliott's request dated June 10, 1977. Information before the Commission indicates that on June 5, 1977, Elliott's radio station was operated on the frequency 27.045 MHz. That frequency is assigned to the Radio Control Service. Section 95.455(a) of the rules prohibits operation on that frequency by Citizens Band licenses. Information further indicates that the transmissions of June 5, 1977, were not identified by call signs, as required by § 95.471(c).

2. Information before the Commission further indicates that during the radio operation on June 5, 1977, the operator of Elliott's station communicated with or attempted to communicate with another station over a distance greater than 150 miles. Section 95.501(b) prohibits the transmission of CB communications for such purposes.

3. On June 5, 1977, Elliott transmitted radio communications at a power level greater than that allowed by § 95.613(b). On June 10, 1977, a transmitter was installed at Elliott's station which was capable of operating on frequencies not authorized for the CB Service, in violation of § 95.641(c) of the rules. As a result of those violations, Elliott was convicted on September 15, 1977, in the United States District Court, Middle District of Georgia, under 47 U.S.C. 502, upon his plea of guilty to violation of §§ 95.613(b) and 95.641(c)(4) of the Commission's rules. The factual matters adjudicated in the criminal proceeding shall not be relitigated in this proceeding pursuant to the doctrine of collateral estoppel.

4. In February 1977, complaints were made to the Commission by neighbors of Elliott about interference to home electronic equipment. The complaints were directed against Elliott. As a result of those complaints, the Commission sent Elliott an "Interception of Radio Station Transmissions" form (FCC Form 762-K), which requested Elliott to have his radio transmitter tested by a radio serviceman and a report made to the Commission of the results. The form, signed by Elliott and dated March 12, 1977, was returned to the Commission indicating his station transmitter operated in compliance with the Commission's rules.

5. On June 10, 1977, as a result of the monitoring of communications from Elliott's station on June 5, 1977, Commission engineers inspected Elliott's CB station. During the inspection, Elliott stated that in February 1977, when the interference complaints were made, he had been operating an amateur transmitter. He stated, that instead of having the amateur transmitter he was actually using, checked for proper operation, he removed the amateur transmitter and substituted a standard CB transmitter before the tests required by the Commission were made by the radio serviceman. Therefore, an issue will be designated to determine whether Elliott engaged in a scheme to mislead the Commission and misrepresented material facts or was lacking in candor when he submitted to the Commission the document "Interception of Radio Station Transmissions," dated March 12, 1977, indicating that his station transmitter operated in compliance with the Commission's rules.

6. In view of the above, the Commission is unable to find that Elliott possesses the requisite qualifications to become a licensee of the Commission. In light of his apparent operating violations while licensed as KTS-4404, his apparent scheme to mislead the Commission concerning technical measurements carried out on his transmitter and his criminal conviction, it appears that Elliott may not be relied upon to abide by the Commission's rules. His conduct may reflect adversely upon his qualifications to be a Commission licensee by revealing a disregard for the Commission's statutory authority

---

*If this statement is intended to be in mitigation, it should include the reasons, if any, why you believe that your radio station licenses should not be revoked.

to license and regulate radio stations and operators.

7. *Accordingly, it is ordered,* That, pursuant to section 309(e) of the Communications Act and §§ 1.973(b) and 0.331 of the rules, Elliott's application for Citizens Band Radio Service license is designated for hearing, at a time and place to be specified by a subsequent order, upon the following issues:

(a) Whether Elliott's radio station was operated in willful or repeated violation of §§ 95.455(a), 95.471(c) and/or 95.501(b) of the Commission's rules.

(b) The effect of Elliott's criminal conviction on September 15, 1977, on his qualification to be a licensee of the Commission.

(c) Whether Elliott misrepresented material facts or was lacking in candor when he submitted the "Interception of Radio Station Transmissions" form, dated March 12, 1977, to the Commission.

(d) Whether, in light of the evidence adduced pursuant to issues (a), (b) and (c), Maxie L. Elliott possesses the requisite qualifications to become a Commission licensee.

(e) Whether, in light of the evidence adduced under the above Issues, the public interest, convenience and necessity would be served by the grant of a Citizens Band Radio Service license to Maxie L. Elliott.

8. *It is further ordered,* That in order to obtain a hearing on the application, Elliott, in person or by attorney, shall within 20 days of the mailing of this order, file with the Commission a written appearance stating an intent to appear on a date fixed for hearing to present evidence on the Issues specified in the foregoing paragraph. Failure to file a written appearance within the time specified will result in the dismissal of the application with prejudice.

9. *It is further ordered,* That a copy of this order shall be sent by regular United States mail to Maxie L. Elliott at his address as shown in the caption.

Chief, Safety and Special Radio Services Bureau.

GERALD M. ZUCKERMAN,
Chief, Legal, Advisory and Enforcement Division.

REPLY TO ORDER DESIGNATING CITIZENS BAND RADIO SERVICE APPLICATION FOR HEARING

In this matter, Respondent takes the action indicated below:

☐ 1. Respondent will appear at a hearing and present evidence on the issues specified in the order of designation.

☐ 2. Respondent will not present evidence on the issues specified in the order of designation and understands that as a result his application will be dismissed with prejudice.

Date: ——— 1978.

MAXIE L. ELLIOTT,
Respondent.

[FR Doc. 78-25497 Filed 9-8-78; 8:45 am]

[6712-01]

[Report No. 1139]

PETITIONS FOR RECONSIDERATION OF ACTIONS IN RULEMAKING PROCEEDINGS FILED

SEPTEMBER 5, 1978.

Docket or RM No.	Rule No.	Subject	Date received
21383	Sec. 73.202(b)	Amendment of § 73.202(b), table of assignments, FM broadcast stations (Camp Lejeune, N.C.). Filed by Lloyd D. Young, attorney for Fran-con, Inc.	Aug. 24, 1978.

NOTE.—Oppositions to petitions for reconsideration must be filed on or before September 26, 1978. Replies to an opposition must be filed within 10 days after time for filing oppositions has expired.

For the Federal Communications Commission.

WILLIAM J. TRICARICO,
Secretary.

[FR Doc. 78-25500 Filed 9-8-78; 8:45 am]

[6730-01]

FEDERAL MARITIME COMMISSION

TEMPORARY EXEMPTION OF COLLECTIVE BARGAINING AGREEMENT

Notice is hereby given that on August 28, 1978, the Commission determined the following collective bargaining agreement to be temporarily exempt from the filing and approval requirements of section 15 of the Shipping Act, 1916, as amended (39 Stat. 733, 75 Stat. 763, 46 U.S.C. 814), pending FEDERAL REGISTER notice, opportunity for commment, and subsequent determination by the Commission that the agreement (or any specific provision thereof) should be permanently exempt from the filing and approval requirements of section 15 of the Shipping Act, 1916, or should be approved, disapproved or modified under that section. This action was taken in accordance with our *Interim Policy Statement-Collective Bargaining Agreements,* served June 12, 1978. This temporary exemption is effective until December 6, 1978.

Interested parties may inspect the agreement at the Washington Office of the Federal Maritime Commission, 1100 L Street NW., Room 10218; or at the Field Offices located at New York, N.Y.; New Orleans, La.; San Francisco, Calif.; Chicago, Ill.; and San Juan, P.R. Comments on the agreement, including requests for hearing, may be submitted to the Secretary, Federal Maritime Commission, Washington, D.C. 20573, on or before October 2, 1978. Comments should include facts and agruments concerning the exemption, approval, modification, or disapproval of the proposed agreement. Comments shall discuss with particularity allegations that the agreement is unjustly discriminatory or unfair as between carriers, shippers, exporters, importers, or ports, or between exporters from the United States and their foreign competitors, or operates to the detriment of the commerce of the United States, or is contrary to the public interest, or is in violation of the act.

A copy of any comments should also be forwarded to the party filing the agreement and the statement should indicate that this has been done.

Agreement No.: LM-11.

Filing Party: Edward D. Ransom, Esq., Lillick, McHose, & Charles, Two Embarcadero Center, San Francisco, Calif. 94111.

Summary: agreement No. LM-11, between the National Marine Engineers Beneficial Association and Pacific Maritime Association, is the collective bargaining agreement concerning Port Engineers for the period June 16, 1978, to June 15, 1981. The purpose of Agreement No. LM-11 is to set forth the wages, hours, working conditions and benefits agreed upon by the parties.

Dated: September 5, 1978.

By the order of the Federal Maritime Commission.

FRANCIS C. HURNEY,
Secretary.

[FR Doc. 78-25356 Filed 9-8-78; 8:45 am]

[6730-01]

SEAIR FORWARDERS, INC.

Independent Ocean Freight Forwarder License Applicants

Notice is hereby given that the following applicants have filed with the Federal Maritime Commission applications for licenses as independent ocean freight forwarders pursuant to section 44(a) of the Shipping Act, 1916, (Stat. 422 and 46 U.S.C. 841(b)).

Persons knowing of any reason why any of the following applicants should not receive a license are requested to communicate with the Director, Bureau of Certification and Licensing, Federal Maritime Commission, Washington, D.C. 20573.

SeAir Forwarders, Inc., 209 Franklin Street, Cedar Falls, Ia. 50613. Officers: Jerrold E. Jacobsen, President, James E. Dunn, Secretary/Treasurer.

By the Federal Maritime Commission.

FRANCIS C. HURNEY,
Secretary.

Dated: September 1, 1978.

[FR Doc. 78-25357 Filed 9-8-78; 8:45 am]

[6210-01]

FEDERAL RESERVE SYSTEM

ARKANSAS BEST CORP.

Acquisition of Bank

Arkansas Best Corp., Fort Smith, Ark., has applied for the Board's approval under section 3(a)(3) of the Bank Holding Company Act (12 U.S.C. 1842(a)(3)) to acquire 11.73 percent or more of the voting shares of Commerce Southwest, Inc., Dallas, Tex. The factors that are considered in acting on the application are set forth in section 3(c) of the Act (12 U.S.C. 1842(c)).

The application may be inspected at the office of the Board of Governors or at the Federal Reserve Bank of Dallas. Any person wishing to comment on the application should submit views in writing to the Secretary, Board of Governors of the Federal Reserve System, Washington, D.C. 20551, to be received not later than October 5, 1978.

Board of Governors of the Federal Reserve System, September 5, 1978.

GRIFFITH L. GARWOOD,
Deputy Secretary of the Board.

[FR Doc. 78-25358 Filed 9-8-78; 8:45 am]

[6210-01]

COMMERCE SOUTHWEST, INC.

Formation of Bank Holding Co.

Commerce Southwest, Inc., Dallas, Tex., has applied for the Board's approval under section 3(a)(1) of the Bank Holding Company Act (12 U.S.C. 1842(a)(1)) to become a bank holding company by acquiring 100 percent (less directors' qualifying shares) of the voting shares of National Bank of Commerce of Dallas, Dallas, Tex. The factors that are considered in acting on the application are set forth in section 3(c) of the act (12 U.S.C. 1842(c)).

The application may be inspected at the offices of the Board of Governors or at the Federal Reserve Bank of Dallas. Any person wishing to comment on the application should submit views in writing to the Secretary, Board of Governors of the Federal Reserve System, Washington, D.C. 20551 to be received no later than October 5, 1978.

Board of Governors of the Federal Reserve System, September 5, 1978.

GRIFFITH L. GARWOOD,
Deputy Secretary of the Board.

[FR Doc. 78-25359 Filed 9-8-78; 8:45 am]

[6210-01]

FIRST CITY BANCORPORATION OF TEXAS, INC.

Acquisition of Bank

First City Bancorporation of Texas, Inc., Houston, Tex., has applied for the Board's approval under section 3(a)(3) of the Bank Holding Company Act (12 U.S.C. 1842(a)(3)) to acquire 100 percent (less directors' qualifying shares) of the voting shares of the Lufkin National Bank, Lufkin, Tex. The factors that are considered in acting on the application are set forth in section 3(c) of the Act (12 U.S.C. (1842(c)).

The application may be inspected at the offices of the Board of Governors or at the Federal Reserve Bank of Dallas. Any person wishing to comment on the application should submit views in writing to the Secretary, Board of Governors of the Federal Reserve System, Washington, D.C. 20551, to be received not later than September 29, 1978.

Board of Governors of the Federal Reserve System, September 1, 1978.

GRIFFITH L. GARWOOD,
Deputy Secretary of the Board.

[FR Doc. 78-25360 Filed 9-8-78; 8:45 am]

[6210-01]

LAKESIDE BANK HOLDING CO.

Formation of Bank Holding Company

LAKESIDE BANK HOLDING CO., New Town, N. Dak., has applied for the Board's approval under section 3(a)(1) of the Bank Holding Company Act (12 U.S.C. 1842(a)(1) to become a bank holding company by acquiring 97 percent or more of the voting shares of Lakeside State Bank, New Town, N. Dak. The factors that are considered in acting on the application are set forth in section 3(c) of the Act (12 U.S.C. 1842(c)).

The application may be inspected at the offices of the Board of Governors or at the Federal Reserve Bank of Minneapolis. Any person wishing to comment on the application should submit views in writing to the Secretary, Board of Governors of the Federal Reserve System, Washington, D.C. 20551, to be received no later than September 29, 1978.

Board of Governors of the Federal Reserve System, September 1, 1978.

GRIFFITH L. GARWOOD,
Deputy Secretary of the Board.

[FR Doc. 78-25361 Filed 9-8-78; 8:45 am]

[6210-01]

RUSSELL STATE BANCSHARES, INC.

Formation of Bank Holding Company

Russell State Bancshares, Inc., Russell, Kans., has applied for the Board's approval under section 3(a)(1) of the Bank Holding Company Act (12 U.S.C. 1842(a)(1)) to become a bank holding company by acquiring 50 percent or more of the voting shares of Russell State Bank, Russell, Kans. The factors that are considered in acting on the application are set forth in section 3(c) of the Act (12 U.S.C. 1842(c)).

The application may be inspected at the offices of the Board of Governors or at the Federal Reserve Bank of Kansas City. Any person wishing to comment on the application should submit views in writing to the Reserve Bank, to be received not later than September 27, 1978.

Board of Governors of the Federal Reserve System, September 4, 1978.

GRIFFITH L. GARWOOD,
Deputy Secretary of the Board.

[FR Doc. 78-25362 Filed 9-8-78; 8:45 am]

[6210-01]

SBT CORP.

Acquisition of Bank

SBT Corp., Savannah, Ga., has applied for the Board's approval under section 3(a)(3) of the Bank Holding Company Act (12 U.S.C. 1842(a)(3)) to acquire 100 percent of the voting shares of Bank of Screven County, Sylvania, Ga. The factors that are considered in acting on the application are set forth in section 3(c) of the Act (12 U.S.C. 1842(c)).

The application may be inspected at the offices of the Board of Governors or at the Federal Reserve Bank of Atlanta. Any person wishing to comment on the application should submit views in writing to the Secretary, Board of Governors of the Federal Reserve System, Washington, D.C. 20551, to be received not later than October 2, 1978.

Board of Governors of the Federal Reserve System, September 5, 1978.

GRIFFITH L. GARWOOD,
Deputy Secretary of the Board.

[FR Doc. 78-25363 Filed 9-8-78; 8:45 am]

[6210-01]

WEST GEORGIA FINANCIAL CORP.

Formation of Bank Holding Company

West Georgia Financial Corp., Tallapoosa, Ga., has applied for the Board's approval under section 3(a)(1) of the Bank Holding Company Act (12 U.S.C. 1842(a)(1)) to become a bank holding company by acquiring 100 percent of the voting shares of West Georgia Bank of Tallapoosa, Tallapoosa, Ga. The factors that are considered in acting on the application are set forth in section 3(c) of the Act (12 U.S.C. 1842(c)).

The application may be inspected at the offices of the Board of Governors or at the Federal Reserve Bank of Atlanta. Any person wishing to comment on the application should submit views in writing to the Reserve Bank, to be received not later than October 2, 1978.

Board of Governors of the Federal Reserve System, September 1, 1978.

GRIFFITH L. GARWOOD,
Deputy Secretary of the Board.

[FR Doc. 78-25364 Filed 9-8-78; 8:45 am]

[6820-22]

GENERAL SERVICES ADMINISTRATION

REGIONAL PUBLIC ADVISORY PANEL ON ARCHITECTURAL AND ENGINEERING SERVICES

Meeting

SEPTEMBER 1, 1978.

Pursuant to Pub. L. 92-463, notice is hereby given of a meeting of the Regional Public Advisory Panel on Architectural and Engineering Services, Region 5, September 25 and September 26, 1978, from 9 a.m. to 5 p.m., Room 3520A, John C. Kluczynski Federal Building, 230 South Dearborn Street, Chicago, Ill. The meeting will be devoted to the initial step of the procedures for screening and evaluating the qualifications or architect-engineers under consideration for selection to furnish professional services for the following projects.

1. Supplemental architect-engineer contract for projects in the State of Illinois.
2. Supplemental architect-engineer contract for projects in the State of Indiana.
3. Supplemental architect-engineer contract for projects in the State of Michigan.
4. Supplemental architect-engineer contract for projects in the State of Minnesota.
5. Supplemental architect-engineer contract for projects in the State of Ohio.
6. Supplemental architect-engineer contract for projects in the State of Wisconsin.
7. Supplemental architect-engineer contract for cost management services in Regional area.
8. "New Sprinkler System," Federal Building, 536 S. Clark Street, Chicago, Ill.
9. "Conversion and Improvements," U.S. Post Office, Lansing, Mich.

This meeting will be open to the public.

EDWARD R. KENNELLY,
Acting Regional Administrator.

[FR Doc. 78-25609 Filed 9-8-78; 8:45 am]

[4110-85]

DEPARTMENT OF HEALTH, EDUCATION, AND WELFARE

Office of the Assistant Secretary for Health

TECHNICAL CONSULTANT PANEL ON THE COOPERATIVE HEALTH STATISTICS SYSTEM OF THE UNITED STATES NATIONAL COMMITTEE ON VITAL AND HEALTH STATISTICS

Meeting

In accordance with section 10(a)(2) of the Federal Advisory Committee Act (Pub. L. 92-463), announcement is made of the following National Advisory body scheduled to meet during the month of October 1978:

Name: Technical Consultant Panel on the Cooperative Health Statistics System of the United States National Committee on Vital and Health Statistics.
Date and Time: October 5-6, 1978, 9 a.m.
Place: Hubert H. Humphrey Building, Room 507-A, 200 Independence Avenue SW., Washington, D.C. 20201.
Open: 9 a.m. to 4:30 p.m.

Purpose. The Technical Consultant Panel on the Cooperative Health Statistics System is to recommend to the United States National Committee on Vital and Health Statistics advice and assistance to be provided the Secretary with respect to the design of and approval of health statistical and health information systems within the Department of Health, Education, and Welfare which have as an objective the production of local, State, and national statistics; and for the adoption or implementation by local, State, or national agencies findings and proposals developed by other organizational agencies.

Agenda. The minutes of the last meeting will be reviewed. A final working draft of minimum CHSS unit "principles" will be reviewed and developed. Reports will be presented and discussed on: (1) Model State legislation; (2) Finance and cost-sharing; (3) Current level of activity of State Centers for Health Statistics; and (4) Designation criteria. There will also be discussion of the panel's work plans in regard to group reports. Suggestions for next meeting dates and agenda items will be discussed.

The meeting is open to the public for observation and participation. Anyone wishing to participate, obtain a roster of members, or other relevant information, should contact Mr. James A. Smith, National Center for Health Statistics, Room 2-12, Center Building, 3700 East-West Highway, Hyattsville, Md. 20782, telephone 301-436-7122.

Agenda items are subject to change as priorities dictate.

Dated: September 1, 1978.

WAYNE RICHEY, Jr.,
Associate Director for Management, Office of Health Policy Research and Statistics.

[FR Doc. 78-25469 Filed 9-8-78; 8:45 am]

[4110-02]

Office of Education

ADVISORY COMMITTEE ON ACCREDITATION AND INSTITUTIONAL ELIGIBILITY

Meeting

AGENCY: Department of Health, Education, and Welfare, Office of Education.

ACTION: Notice.

SUMMARY: This notice sets forth the schedule and proposed agenda of the next public meeting of the Advisory Committee on Accreditation and Institutional Eligibility. It also describes

the functions of the Committee. Notice of these meetings is required under the Federal Advisory Committee Act (5 U.S.C. Appendix 1, 10(a)(2)). This document is intended to notify the general public of its opportunity to attend and to participate.

DATES: October 3, 1978, 8:30 a.m. to 5 p.m., local time; and October 4, 1978, 9 a.m. to 12 noon. Requests for oral presentations before the Committee must be received on or before September 22, 1978. All written material which a party wishes to file may be submitted at any time and will be considered by the Advisory Committee.

ADDRESS: Dulles Marriott Hotel, Dulles International Airport, Washington, D.C. 20041.

FOR FURTHER INFORMATION CONTACT:

John R. Proffitt, Director, Division of Eligibility and Agency Evaluation, Office of Education, Room 3030, ROB-3, 400 Maryland Avenue SW., Washington, D.C. 20202, 202-245-9873.

The Advisory Committee on Accreditation and Institutional Eligibility is established pursuant to section 253 of the Veterans' Readjustment Assistance Act (Chapter 33, Title 38, United States Code). The Committee is directed to:

(1) Review all current and future policies relating to the responsibility of the Commissioner for the recognition and designation of accrediting agencies and associations wishing to be designated as nationally recognized accrediting agencies and associations, and recommend desirable changes in criteria and procedures;

(2) Review all current and future policies relating to the responsibility of the Commissioner for the recognition and listing of State agencies wishing to be designated as reliable authority as to the quality of public postsecondary vocational education, and of nurse education, and recommend desirable changes in criteria and procedures;

(3) Review and advise the Commissioner of Education in the formation of all current and future policy relating to the matter of institutional eligibility;

(4) Review the provisions of current legislation affecting Office of Education responsibility in the area of accreditation and institutional eligibility and suggest needed changes to the Commissioner of Education;

(5) Develop and recommend to the Commissioner of Education criteria and procedures for the recognition and designation of accrediting agencies and associations in accordance with legislative provisions, Presidential directives, or interagency agreements;

(6) Review and recommend to the Commissioner of Education for designation as nationally recognized accrediting agencies and associations of reliable authority all applicant accrediting agencies and associations which meet criteria established under (5) above;

(7) Develop and recommend to the Commissioner of Education criteria and procedures for the recognition, designation and listing of State agencies in accordance with statutory provisions, Executive orders, or interagency agreements;

(8) Review and recommend to the Commissioner of Education for designation as State agencies of reliable authority as to the quality of public postsecondary vocational education, and of nurse education, all applicant State agencies which meet criteria established under (7) above;

(9) Develop, under the authority of the Vocational Education Act of 1963, as amended, and recommend for the approval of the Commissioner of Education, standards and criteria for specific categories of private vocational training institutions which have no alternative route by which to establish eligibility for Federal funding programs;

(10) Develop, under the authority of the Higher Education Act of 1965, as amended, and recommend for the approval of the Commissioner of Education, standards and criteria for specific categories of institutions of higher education, for which there is no recognized accrediting agency or association, in order to establish eligibility for participation in the student loan programs authorized by title IV-B thereof;

(11) Maintain a continuous review of Office of Education administrative practice, procedures, and judgments relating to accreditation and institutional eligibility and advise the Commissioner of needed changes;

(12) Keep within its purview the accreditation and approval process as it develops in all levels of education;

(13) Advise the Commissioner of Education concerning the relations of the Office with accrediting agencies or associations, or other approval bodies as the Commissioner may request;

(14) Advise the Commissioner of Education, pursuant to the Bureau of the Budget (Office of Management and Budget) policy dated December 23, 1954, regarding the award of degree-granting status to Federal agencies and institutions;

(15) Not later than March 31 of each year, make an annual report of its activities, findings, and recommendations.

The meeting on October 3 and 4, 1978, will be open to the public. The meeting will be held at the Dulles Marriott Hotel, Washington, D.C. The Committee will review petitions and reports by nationally recognized accrediting agencies and associations relative to initial or continued recognition by the U.S. Commissioner of Education. The Committee also will hear presentations by representatives of the petitioning agencies and interested third parties. Agencies having petitions and reports pending before the Committee are:

American Bar Association, Council of the Section of Legal Education and Admissions to the Bar.

American Osteopathic Association.

Council on Education for Public Health.

Foundation for Interior Design Education Research, Committee on Accreditation.

National Accreditation Association and the American Examining Board of Psychoanalysis, Inc., Education and Accreditation Committee.

National Association of Private, Nontraditional Schools and Colleges.

National Association of Trade and Technical Schools, Accrediting Commission.

The Advisory Committee also will review a request from the Brookhaven College, Farmer's Branch, Hex., for a determination of satisfactory assurance that it will meet the accrediting standards of a nationally recognized accrediting agency within a reasonable period of time.

Requests for oral presentations before the Committee should be submitted in writing to the Director, Division of Eligibility and Agency Evaluation, Office of Education, Room 3030, ROB-3, 400 Maryland Avenue SW., Washington, D.C. 20202. Requests should include the names of all persons seeking an appearance, the party or parties which they represent, and the purpose for which the presentation is requested. Requests must be received by the Division of Eligibility and Agency Evaluation on or before September 22, 1978. Time constraints may limit oral presentations. However, all additional written material that a party wishes to file will be considered by the Advisory Committee.

Records shall be kept of all Committee proceedings and shall be available for public inspection at the Division of Eligibility and Agency Evaluation.

Signed at Washington, D.C., on September 6, 1978.

JOHN R. PROFFITT,
Director, Division of Eligibility and Agency Evaluation, Office of Education.

[FR Doc. 78-25451 Filed 9-8-78; 8:45 am]

[4110-02]

BASIC EDUCATIONAL OPPORTUNITY GRANT PROGRAM

Award of Multiple Data Entry Contracts—Closing Date

The Commissioner of Education gives notice that he will contract with State agencies and need analysis services to permit them to collect financial data from students for the Basic Grant Program on their own forms for the 1979-80 academic year if they qualify under the criteria set forth below. These organizations will transmit the data needed to calculate a student's expected family contribution under the Basic Grant Program to the Office of Education. This procedure eliminates the necessity for those students to file a Federal Basic Grant form.

The Office of Education has contracts for the 1978-79 academic year with four organizations that are currently providing these services. These organizations, as well as any new ones, must meet the criteria listed below before contracts will be awarded.

CLOSING DATE

The Commissioner will exercise the first option year for current contractors who meet the criteria. Other organizations that wish to participate in the multiple data entry process must submit a letter indicating their interest by September 30, 1978 and in addition submit with that letter documentation to support their claim that they meet the criteria. The Commissioner will provide a Request for Proposal to any organization that meets the criteria. The letter and documentation must be submitted to: Peter K. U. Voigt, Acting Director, Division of Policy and Program Development, Room 4717, ROB-3, 400 Maryland Avenue SW., Washington D.C. 20202.

CRITERIA

It is estimated that in the 1978-79 academic year approximately 2.5 million students will use non-Federal forms when applying to have their expected family contribution determined for the Basic Grant Program. Criteria were established in this initial year to assure that the new arrangement works to the advantage of the student, and the applications are processed correctly and in a timely manner. These criteria have essentially been extended for the coming year.

The criteria are:

1. Whether the organization has an established financial aid form and performs its own processing of the form. An organization will be considered to perform its own processing if, in a central location, it performs the functions of receiving data entry, data editing, and maintains the documents in a secure facility. Its form must meet the Office of Education's requirements for standard data elements and instructions necessary for the collection of data needed to calculate a student's expected family contribution under the Basic Grant Program.

2. Whether the volume of forms processed at a central location for students applying for financial assistance for the 1977-78 academic year was at least 100,000.

(Catalog of Federal Domestic Assistance No. 13.539 Basic Educational Opportunity Grant Program.)

(20 U.S.C. 1070a.)

Dated: September 5, 1978.

JOHN ELLIS,
Acting U.S. Commissioner of Education.

[FR Doc. 78-25598 Filed 9-8-78; 8:45 am]

[4110-02]

SCHOOL ASSISTANCE IN FEDERALLY AFFECTED AREAS

Notice of Extension of Filing Date for Fiscal Year 1977 Applications

Sections 2, 3, and 4 of Pub. L. 81-874 ("the Act") provide financial assistance to local educational agencies burdened by Federal activities which reduce the local tax base or increase the number of children attending the schools of that agency. Section 5 of the Act provides that, to apply for this assistance, a local educational agency must submit an application to the appropriate State educational agency. The State educational agency processes the application and then forwards it to the Commissioner. Current regulations, 45 CFR 115.11 and 115.12 establish, subject to certain exceptions, January 31 of the appropriate fiscal year as the filing date for the Commissioner's receipt of these applications. The regulations provide that the Commissioner will not approve applications received after the applicable filing date. For fiscal year 1977 applications, this filing date was Monday, January 31, 1977.

The Commissioner has learned that application of these regulations has unfairly penalized local educational agencies that, despite their efforts to submit timely applications, were prevented from doing so for one unforeseen reason or another. It is not the intent of the regulations to deny this Federal assistance to local educational agencies in these circumstances. Therefore notice is hereby given that the filing date for fiscal year 1977 is extended to October 11, 1978, for those local educational agencies able to demonstrate at this time that they made reasonable efforts to submit timely applications, but were prevented from doing so through no fault of their own.

For further information please contact William L. Stormer, Director, Division of School Assistance in Federally Affected Areas, U.S. Office of Education, 400 Maryland Avenue SW., Washington, D.C. 20202.

(Catalog of Federal Domestic Assistance No. 13.478, School Assistance in Federally Affected Areas—Maintenance and Operation (Impact Aid) Program.)

Dated: September 6, 1978.

JOHN ELLIS,
Acting U.S. Commissioner of Education.

[FR Doc. 78-25599 Filed 9-8-78; 8:45 am]

[4110-12]

Office of the Secretary

BOARD OF ADVISORS TO THE FUND FOR THE IMPROVEMENT OF POSTSECONDARY EDUCATION

Meeting

Notice is hereby given, pursuant to section 10(a)(2) of the Federal Advisory Committee Act (Pub. L. 92-463), that the next meeting of the Board of Advisors to the Fund for the Improvement of Postsecondary Education will be held on October 5, 1978, at 5 p.m., through October 6, 1978, at 4 p.m., at the Mayflower Hotel, 1127 Connecticut Avenue NW., Washington, D.C.

The Board of Advisors to the Fund was established to recommend to the Director of the Fund and the Assistant Secretary for Education priorities for funding and the approval or disapproval of grants and contracts of a given kind or over a designated amount under section 404 of the General Education Provisions Act.

The meeting will be open to the public. The purpose of the meeting will be to review and approve program directions for fiscal year 1979, and to examine effective work education models.

A summary of the proceedings of the meeting and a roster of members may be obtained from the Fund for the Improvement of Postsecondary Education, 400 Maryland Avenue SW., Room 3123, Washington, D.C. 20202, telephone 202-245-8091.

Signed at Washington, D.C., on September 6, 1978.

ERNEST BARTELL,
Director, Fund for the Improvement of Postsecondary Education.

[FR Doc. 78-25472 Filed 9-8-78; 8:45 am]

[4310-84]

DEPARTMENT OF THE INTERIOR

Bureau of Land Management

NEW MEXICO

Opportunity for Public Hearing and Republication of Notice of Proposed Withdrawal

AUGUST 31, 1978.

The Bureau of Reclamation, U.S. Department of the Interior, filed application NM 28428 on July 2, 1976, for a withdrawal in relation to the following described land:

NEW MEXICO PRINCIPAL MERIDIAN, NEW MEXICO

T. 20 S., R. 26 E.,
Sec. 16, E½SE¼.

The area described aggregates 80 acres in Eddy County, N. Mex.

The applicant desires the land for use in connection with the Brantley Dam and Reservoir project.

A notice of the proposed withdrawal was published in the FEDERAL REGISTER on August 6, 1976, volume 41, page 32931 FR Doc. 76-22854.

Pursuant to section 204(h) of the Federal Land Policy and Management Act of 1976 (90 Stat. 2754), notice is hereby given that an opportunity for a public hearing is afforded in connection with the pending withdrawal application. All interested persons who desire to be heard on the proposed withdrawal must file a written request for a hearing with the State Director, Bureau of Land Management, Department of the Interior, P.O. Box 1449, Santa Fe, N. Mex. 87501, on or before October 10, 1978. If a public hearing is scheduled, a notice will be published in the FEDERAL REGISTER giving the time and place of such hearing. All previous comments submitted in connection with the withdrawal application have been included in the record and will be considered in making a final determination on the application.

In lieu of or in addition to attendance at a scheduled public hearing, written comments or objections to the pending withdrawal application may be filed with the undersigned authorized officer of the Bureau of Land Management on or before October 10, 1978.

The above-described land is temporarily segregated from all forms of appropriation under the public land laws. Current administrative jurisdiction over the segregated land will not be affected by the temporary segregation. In accordance with section 204(g) of the Federal Land Policy and Management Act of 1976, the segregative effect of the pending withdrawal application will terminate on October 20, 1991, unless sooner terminated by action of the Secretary of the Interior.

All communications (except for public hearing requests) in connection with the pending withdrawal application should be addressed to the undersigned, Bureau of Land Management, Department of the Interior, P.O. Box 1449, Santa Fe, N. Mex. 87501.

Dated: August 31, 1978.

FRED E. PADILLA,
Chief, Branch of Lands and Minerals Operations.

[FR Doc. 78-25351 Filed 9-8-78; 8:45 am]

[4310-84]

[NM 34098]

NEW MEXICO

Application for Airport Lease

Notice is hereby given that pursuant to the Act of May 24, 1928 (49 U.S.C. 211-214), Wilderness Area Rescue Squad, Inc. has applied for an airport lease for the following described land:

NEW MEXICO PRINCIPAL MERIDIAN, NEW MEXICO

T. 24 N., R. 2 W.,
Sec. 20, S½SE¼;
Sec. 21, S½S½ and NE¼SW¼.

The purpose of this notice is to inform the public that the filing of this application segregates the described land from all other forms of use or disposal under the public land laws.

Interested persons desiring to express their views should do so to the District Manager, Bureau of Land Management, 3550 Pan American Freeway NE., Albuquerque, N. Mex. 87107.

FRED E. PADILLA,
Chief, Branch of Lands and Minerals Operations.

[FR Doc. 78-25352 Filed 9-8-78; 8:45 am]

[4310-31]

Geological Survey

NEW MEXICO

Known Geothermal Resources Area

Pursuant to the authority vested in the Secretary of the Interior by section 21(a) of the Geothermal Steam Act of 1970 (84 Stat. 1566, 1572; 30 U.S.C. 1020), and delegations of authority in 220 Departmental Manual 4.1 H, Geological Survey Manual 220.2.3, and Conservation Division Supplement (Geological Survey Manual) 220.2.1 G, the following described lands are hereby deleted from the Kilbourne Hole known geothermal resources area, effective July 5, 1977:

(31) NEW MEXICO—KILBOURNE HOLE KNOWN GEOTHERMAL RESOURCES AREA

NEW MEXICO PRINCIPAL MERIDIAN, NEW MEXICO

T. 28 S., R. 1 W.,
Sec. 21 and secs. 26 to 31, inclusive.

The deleted area described aggregates 3,243.56 acres, more or less.

Dated: June 13, 1978.

GEORGE H. HORN,
Conservation Manager, Central Region.

[FR Doc. 78-25353 Filed 9-8-78; 8:45 am]

[4310-70]

National Park Service

GOLDEN GATE NATIONAL RECREATION AREA ADVISORY COMMISSION

Meeting

Notice is hereby given in accordance with the Federal Advisory Committee Act that a meeting of Golden Gate National Recreation Area Advisory Commission will be held at 7:30 p.m. (PDS) on Wednesday, September 27, 1978, at Golden Gate National Recreation Area Headquarters Vistors Center, Building 201, Fort Mason, San Francisco, Calif.

The Advisory Commission was established by Pub. L. 92-589 to provide for the free exchange of ideas between the National Park Service and the public and to facilitate the solicitation of advice or other counsel from members of the public on problems pertinent to the national park system in Marin and San Francisco Counties.

Members of the Commission are as follows:

Mr. Frank Boerger, Chairman; Ms. Amy Meyer, Secretary; Mr. Ernest Ayala; Mr. Richard Bartke; Mr. Fred Blumberg; Ms. Daphne Greene; Mr. Peter Haas, Sr.; Mr. John Jacobs; Ms. Gimmy Park Li; Mr. Joseph Mendoza; Mr. John Mitchell; Mr. Merritt Robinson; Mr. Jack Spring; Dr. Edgar Wayburn; and Mr. Joseph Williams.

The major agenda items will be reports on specific issues to be resolved prior to publication of the draft general management plan from the following committees: Northeast Waterfront, Fort Mason, Trails, Transportation, Education/Recreation and Military Lands. There will be a presentation on a proposed pet policy and a review by the General Superintendent of the Whole Earth Jamboree.

This meeting is open to the public. Any member of the public may file with the Commission a written statement concerning the matters to be discussed.

Persons wishing to receive further information on this meeting or who wish to submit written statements may contact Lynn H. Thompson, General Superintendent, Golden Gate National Recreation Area, Fort Mason, San Francisco, Calif. 94123, telephone 415-556-2920.

Minutes of the meeting will be available for public inspection by October 31, 1978, in the Office of the General Superintendent, Golden Gate National Recreation Area, Fort Mason, San Francisco, Calif.

Dated: August 31, 1978.

HOWARD H. CHAPMAN,
Regional Director, Western Region.

[FR Doc. 78-25449 Filed 9-8-78; 8:45 am]

[4310-70]

NATIONAL PARK SYSTEM ADVISORY BOARD

Meeting

Notice is hereby given in accordance with the Federal Advisory Committee Act that meetings of the National Park System Advisory Board will be

held October 2-11 during field inspections of areas in the Western Region of the National Park Service, and conclude with the regular fall business meeting at Yosemite National Park on October 12 and 13.

The purpose of the Advisory Board is to advise the Secretary of the Interior on matters relating to the National Park System.

The Advisory Board will inspect various management and operational functions of the Western Region of the National Park Service as follows: October 2-3—Golden Gate National Recreation Area, October 4-6—Redwood National Park, October 7—proposed Santa Monica Mountains national recreation area, October 8—Channel Islands National Monument, and conclude with an inspection tour of Yosemite National Park on October 9 and 10.

The fall business meeting of the Advisory Board will convene at 9 a.m. on October 12 at the visitor center auditorium, Yosemite National Park, Calif. The Board will meet in general session to receive reports on new areas study process, National Historic Trails, river running in the Grand Canyon, land acquisition program, NPS science and technology directorate, omnibus park bill, and Alaska park proposals. The Board also will review status report summaries on concessions, hostels, management of feral burros and wild boars in national parks, youth programs, safety, and Assateague Island National Seashore general management plan.

October 13, the Advisory Board will reconvene at 9 a.m. for a discussion on urban park matters, consideration of past and future Advisory Board activities, and to formulate its comments and recommendations.

The meetings will be open to the public. However, members of the public wishing to participate in the field inspection must provide their own transportation, food and accommodations, which are generally available on a commercial basis. Space and facilities to accommodate members of the public at the business meetings are limited and persons will be accommodated on a first-come, first-served basis. Any member of the public may file with the Advisory Board a written statement concerning the matters to be considered.

Persons wishing further information concerning the field inspection and business meeting, or who wish to submit written statements, may contact Shirley M. Luikens, Advisory Boards and Commissions, National Park Service, Washington, D.C. 202-343-2012.

Summary minutes of the meeting will be available for public inspection 10 to 12 weeks after the meeting in room 3013, Interior Building, Washington, D.C.

Dated: September 6, 1978.

JEAN C. HENDERER,
Chief, Office of Cooperative Activities, National Park Service.

[FR Doc. 78-25447 Filed 9-8-78; 8:45 am]

[4310-70]

PICTURED ROCKS NATIONAL LAKESHORE ADVISORY COMMISSION

Meeting

Notice is hereby given in accordance with Pub. L. 92-463 that a meeting of the Pictured Rocks National Lakeshore Advisory Commission will be held October 21, 1978, at 10 a.m. (e.d.t.), at the Grand Marais Community Center, Grand Marais, Mich.

The Commission was established by Pub. L. 89-668 to meet and consult with the Secretary of the Interior on general policies and specific matters related to the administration and development of the Pictured Rocks National Lakeshore.

The members of the Commission are:

Dr. John Tanton (chairman), Mr. Leo Garlepy, Mr. Glenn C. Gregg, Mr. David C. West, and Mr. James Becker.

Matters to be discussed at the meeting include discussion of the General Management Plan and a report on the Alger County/Pictured Rocks Planning Task Force.

The meeting will be open to the public. Any member of the public may file with the Commission prior to the meeting a written statement concerning the matters to be discussed. Persons wishing further information concerning the meeting, or who wish to submit written statements, may contact Donald F. Gillespie, Superintendent, Pictured Rocks National Lakeshore, P.O. Box 40, Munising, Mich. 49862, telephone 906-387-2607.

Minutes of the meeting will be available for public inspection 2 weeks after the meeting at Pictured Rocks National Lakeshore headquarters at Sand Point, 4 miles east of Munising, Mich.

Dated: August 30, 1978.

MERRILL D. BEAL,
Regional Director, Midwest Region.

[FR Doc. 78-25448 Filed 9-8-78; 8:45 am]

[4310-70]

National Park Service

GOLDEN SPIKE NATIONAL HISTORIC SITE

Negative Declaration and Availability of General Management Plan

Notice is hereby given that a general management plan for Golden Spike National Historic Site is available for public review and comment.

The general management plan identifies and evaluates objectives of management and relates these basic concepts to the management and development of the historic site for visitor use.

In compliance with the National Environmental Policy Act of 1969, the National Park Service has also prepared an environmental assessment of the alternatives for the general management plan. After making an environmental review of the assessment, the National Park Service has concluded that an environmental impact statement is not needed.

The environmental assessment and review are on file and available for inspection upon request at the Superintendent's Office, Golden Spike National Historic Site, Utah, and at the Office of the Assistant to the Regional Director (Utah), National Park Service, 125 South State Street, Room 2208, Salt Lake City, Utah. The assessment considers the nature of the resources, available alternatives, their impacts, mitigating values, adverse effects, a brief description of the alternative selected as the proposed action, and additional considerations that provide a basis for the conclusion that an environmental statement is unnecessary.

Interested individuals, representatives or organizations, and public officials are invited to submit written comment on the environmental assessment, the environmental review, or the general management plan to the Superintendent for inclusion in the official record, which shall be held open until October 11, 1978.

Anyone wishing additional information and/or copies of the general management plan should contact the Superintendent, Golden Spike National Historic Site, P.O. Box 394, Brigham City, Utah 84302.

Copies of the plan may also be obtained from the Regional Director, Rocky Mountain Region, National Park Service, 655 Parfet Street, P.O. Box 25287, Denver, Colo. 80225.

Dated: August 30, 1978.

IRA J. HUTCHISON,
Acting Director, National Park Service.

[FR Doc. 78-25346 Filed 9-8-78; 8:45 am]

[4310-70]

FLOODPLAINS AND WETLANDS EXECUTIVE ORDERS

Availability for Public Comment on Service Procedures for Implementation

AGENCY: National Park Service, Department of the Interior.

SUMMARY: The Service is making available for public review and comment the procedures it will use to implement Executive Order 11988, Floodplain Management, and Executive Order 11990, Protection of Wetlands. Both orders require all Federal agencies to issue or amend existing procedures to comply with the orders. The Department of the Interior's draft procedures for these orders specify that all subdivisions of the Department are to prepare procedures to guide their specific activities. The Service will consider comments from the public and other governmental agencies when preparing, revising, or finalizing its procedures.

DATE: Comments must be received on or before October 16, 1978.

ADDRESS: All comments should be sent to the National Park Service, Office of Park Planning and Environmental Quality, Department of the Interior, Washington, D.C. 20240.

FOR FURTHER INFORMATION, CONTACT:

Dr. William P. Gregg, Office of Environmental Compliance, National Park Service, Washington, D.C. 20240, phone 202-343-2164.

SUPPLEMENTARY INFORMATION: The U.S. Water Resources Council's Floodplain Management Guidelines for Implementing E.O. 11980 (43 FR 6063, February 10, 1978) provides the basic implemenation guidelines. The Department of the Interior's draft procedures incorporate the Water Resources Council's guidelines and makes them specific to the various programs of the National Park Service. This notice contains draft revisions to National Park Service managment policies and guidelines.

NATIONAL PARK SERVICE COMPLIANCE WITH EXECUTIVE ORDERS 11988 (FLOODPLAIN MANAGEMENT) AND 11990 (PROTECTION OF WETLANDS)

The National Park Service has examined its existing procedures as required by Executive Orders 11988 and 11990. The following actions are proposed to assure Service compliance with the orders.

I. The "Managment Policies" of the National Park Service are being revised as follows:

A. Page III-6: The section entitled "Construction" is being revised to include the following paragraphs:

Facilities and structures shall not be located in areas where natural processes pose a persistent threat to the facilities or structures, or to people using them, except where no feasible alternative exists for the use, enjoyment, and management of a park and all safety and hazard probability factors have been considered. Such areas include, but are not limited to, unstable shorelines; unstable geological areas subject to mud slides, landslides, rockslides, or soil creep; active dunes; thermal areas and 100-year floodplains including coastal areas. Because of potential loss of life, injury, or loss of essential or irreplaceable records and objects, structures such as schools, hospitals, and museums, should not be located in a 500-year floodplain. Because of the fragility and natural resource values of wetlands, impact from construction activities shall be avoided, except where no reasonable alternative exists to meet the managment objectives of the park.

Where new facilities and structures must be located in such areas, their design and siting shall be based upon scientific, engineering, and architectural studies; consideration to protection of human life, natural processes, and cultural resources; and consideration to their planned lifespan. Existing structures or facilities located in such areas and needing rehabilitation, restoration, or replacement will be subjected to the same scrutiny as those prescribed for new facilities or structures. In the case of historic structures this scrutiny will be but one factor in determining their preservation. Before development in floodplains or wetlands is provided, the requirements of Executive Order 11988, "Floodplain Management," and Executive Order 11990, "Protection of Wetlands," must be fulfilled, where applicable.

B. Page IV-22: The last sentence on the page is being revised so that the complete paragraph in which it is located reads as follows:

In development zones, management should plan to phase out, systematically relocate, or provide alternative developments to facilities located in hazardous areas that cannot be reasonably protected. New developments will not be placed in areas subject to flood or wave erosion or active shoreline processes unless it can be demonstrated that they are essential to meet the park's purpose, that no alternative locations are available, and that the development will be reasonably assured of surviving during its planned lifespan without the need of shoreline control measures. Before development in such areas is provided, the requirements of Executive Order 11988, "Floodplain Management," and of Executive Order 11990, "Protection of Wetlands," must be fulfilled.

II. Appendix A to the "Planning Process Guideline, NPS-2," is being revised by:

A. Deleting reference to Executive Order 11296, "Evaluation of flood hazard in locating federally owned or financed buildings, roads, and other facilities, and in disposing of Federal lands and properties."

B. Adding a section on Executive Order 11988 as follows:

The purposes of Executive Order 11988 are "to avoid to the extent possible the long- and short-term adverse impacts associated with occupancy and modification of floodplains and to avoid direct and indirect support of floodplain development wherever there is a practicable alternate." It directs each Federal agency in carrying out its responsibilities to provide leadership and to take action to reduce the risk of flood loss, to minimize the impact of floods on human safety, health, and welfare and to restore and preserve the natural and beneficial values served by floodplains. It replaces the 1966 Executive Order 11296 on Flood Hazard Evaluation.

Documents pertinent to implementation of the Order are as follows:

1. "Floodplain Management Guidelines for Implementing E.O. 11988" issued by the Water Resources Council (WRC) on February 10, 1978, in response to section 2(a) of the order. These guidelines have two parts. Part I contains the basic guidance for interpretation of the order and part II describes a floodplain management and decisionmaking process.

2. "A Unified National Program for Floodplain Management" issued by WRC in July 1976. Section 2(d) of the order requires that each Federal agency issue or amend its regulations and procedures to comply with the order. Among other things the procedures shall incorporate the unified national program for floodplain management. The WRC guidelines require that the procedures of each Federal agency shall reflect the conceptual framework of floodplain management as set out in the unified national program for floodplain management.

3. Departmental manual sets forth interim guidelines to be followed in implementing the order.

The procedures contained in the "Planning Process Guideline, NPS-2" are within the conceptual framework of the unified national program for floodplain management and are harmonious with the order, the WRC guidelines, and the departmental manual with the following additional provisions:

(A) For all study areas:

(1) The information base described in chapter 5 of NPS-2, shall include maps of the study areas showing the 100-year floodplain if it is present. Step 1, part II of the WRC guidelines contains valuable information about identification of floodplain location.

(2) The statement for management, described in chapter 1 of NPS-2, for a park in which a 100-year floodplain is located shall address floodplain management. Where park facilities exist in the 100-year floodplain, the situation shall be discussed under "Influences on Management." A management objective could evolve from such a discussion.

(B) For all planning documents recommending locations of structures or facilities in the 100-year floodplain:

(1) Each plan shall include:

(a) A description of why the facilities or structures must be located in the floodplain.

(b) A description of all significant facts considered in making the determination including alternative sites and actions.

(c) A statement indicating whether the proposed action conforms to applicable State or local floodplain protection standards.

(2) Planning and environmental documents shall be sent to State and areawide A-95 clearinghouses as an attachment to form DI-711 to meet the requirement of the order that the notice should not exceed three pages in length including a location map. The form shall include:

(a) The reasons why the action is proposed to be located in a floodplain.

(b) A statement indicating whether the action conforms to applicable State or local floodplain protection standards.

(c) A list of the alternatives considered.

(3) Planning and environmental documents shall be coordinated with the following: Environmental Protection Agency; Federal Insurance Administration; Fish and Wildlife Service; U.S. Geological Survey; Bureau of Reclamation; Corps of Engineers; and Soil Conservation Service.

C. Adding a section on Executive Order 11990 as follows:

The purposes of Executive Order 11990 are to avoid, to the extent possible, the long- and short-term adverse impacts associated with the destruction or modification of wetlands, and to avoid direct or indirect support of new construction in wetlands wherever there is a practicable alternative. The order directs each Federal agency in carrying out its responsibilities to provide leadership and take action to minimize the destruction, loss, or degradation of wetlands, and to preserve and enhance the natural and beneficial values of wetlands.

This order and E.O. 11988 on Floodplain Management were both issued on May 24, 1977, as part of the President's message on the environment. Of the two orders, E.O. 11988 on Floodplain Management is more detailed and has tighter compliance procedures. Because most of the Nation's wetlands are located on floodplains, most planning for wetlands also must comply with E.O. 11988. Please refer to E.O. 11988 in the appendix for further guidance on planning of floodplains.

The procedures contained in the Planning Process NPS-2 are essentially compatible with both orders and the departmental manual.

In preparing plans for development, public use, and resource management, planners shall determine the locations of swamps, marshes, bogs, wet meadows, mudflats, and other wetlands within the planning area and shall insure that the quality of these resources is preserved and enhanced to the greatest degree possible. The nature and significance of the effects of proposed actions on the identified wetlands shall be recorded in appropriate NEPA compliance documents. If adverse effects on wetlands will occur, the plan shall show that there is no practicable alternative to the use of wetlands and that all practicable mitigating measures have been incorporated into the proposal. The list of development actions in the appendix of general management plans shall indicate which, if any, proposed facilities would be constructed in wetlands.

III. The Interpretive Guidelines, NPS-6, will be revised during the summer of 1978 to provide for conspicuous delineation of past and probable flood height to enhance public awareness of and knowledge about flood hazards as required by section 3(c) of Executive Order 11988.

IV. On June 20, 1978, the Acting Chief of the Office of Programming and Budget sent to all National Park Service Regional Directors a memorandum the subject of which is "Programming of Line Item Construction Projects in Accordance with Executive Orders 11988 and 11990." The text of the memorandum is as follows:

In accordance with the requirements in Executive Orders 11988 (Floodplain Management) and 11990 (Protection of Wetlands), if a proposed action will be located in a floodplain or wetlands, this fact must be noted in related budget requests to OMB. The budget request must also state whether or not the action is in accord with these Executive orders.

To assure compliance with these orders for FY 1980, the regions must review their proposed FY 1980 line item construction programs as transmitted on June 16 from this office and reply by memorandum to this office by September 1. The regions must identify those projects that would involve facilities located in a floodplain or wetlands. The memorandum must also state whether the projects are in accord with the respective Executive order.

For FY 1981 and future fiscal years, beginning immediately, a written statement must be included in all 10-238 package proposals involving facilities in a floodplain or wetlands. The 10-238 must state whether or not the project complies with the applicable Executive order. This statement must be made in section II of the 10-238, Limitations and Influences of the Planning and Management Requirements.

Questions regarding these instructions should be directed to Bruce Sheaffer on 343-8746.

The memorandum is an interim measure. By fall of this year, new budget formulation guidelines will be completed for distribution servicewide. These guidelines will incorporate the instructions contained in the above memorandum. These actions will assure that beginning in FY 1980, the National Park Service line item construction program will be in compliance with the Executive orders.

Dated: August 30, 1978.

WILLIAM J. WHALEN,
Director, National Park Service.

[FR Doc. 78-25453 Filed 9-8-78; 8:45 am]

[4310-70]

THE PACIFIC CREST TRAIL WITHIN THE NORTH CASCADES NATIONAL PARK SERVICE COMPLEX NOW AVAILABLE

Environmental Assessment Regarding Proposed Rerouting

An environmental assessment dealing with a proposed reroute of a portion of the Pacific crest trail, located within the North Cascades National Park Service Complex, has been completed.

A reroute of the trail section, now known as the Bridge Creek route, was prompted in 1970 because it did not satisy certain criteria specified in the Pacific crest trail guide for location, design, and managment.

The new assessment considers four alternatives routes: Three down the Maple Creek drainage and one down Bridge Creek which is the existing route.

Massive potential impact on the fragile Maple Pass and the lower elevation meadow basin environments is emphasized. The report states that use of the existing Bridge Creek route would incur little additional impact.

Design and location criteria for the Pacific crest trail suggests placement of the trail along "crests" and where the mass of land is below the traveler. The opportunity for panoramic scenery and distant views is also recommended.

General criteria for the Pacific crest trail suggests placement of the trail so as to result in low impact on the fragile resources of the environment.

Appendices included in the assessment provide information on the vegetation of Maple Pass as well as other reconnaissance studies and surveys.

Comments from the public concerning the assessment will be accepted on or before October 11, 1978.

Copies of the assessment can be obtained by writing to the Superintendent, North Cascades National Park Service Complex, Sedro Woolley, Wash. 98284.

Dated: August 3, 1978.

RUSSELL E. DICKENSON,
Regional Director.

[FR Doc. 78-25450 Filed 9-8-78; 8:45 am]

[4410-01]

NATIONAL COMMISSION FOR THE REVIEW OF ANTITRUST LAWS AND PROCEDURES

WORKING GROUP

Meeting

Notice, on behalf of the National Commission for the Review of Antitrust Laws and Procedures (hereinafter "Commission"), is hereby given that the Commission's Working Group on the Empirical Case Studies Project (hereinafter "Working Group"), in accordance with Executive Order 12022 and section 10(a)(2) of the Federal Advisory Committee Act (Pub. L. 92-463; 86 Stat. 770), will meet on September 26, 1978, starting at 2:30 p.m. in Room B-352 of the Rayburn House Office Building, Independence Avenue and

South Capitol Street SW., Washington, D.C.

The purpose of the meeting will be to hear testimony on behalf of International Business Machines Corp. on the subject of complex antitrust litigation.

The meeting will be open to the public.

Dated: September 8, 1978.

WENDELL B. ALCORN, Jr., *Special Counsel for Eleanor M. Fox, John Izard, Gordon B. Spivack, Co-Chairpersons of the Working Group.*

[FR Doc. 78-25700 Filed 9-8-78; 12:07 pm]

[7537-01]

NATIONAL FOUNDATION ON THE ARTS AND THE HUMANITIES

DANCE ADVISORY PANEL

Meeting

Pursuant to section 10(a)(2) of the Federal Advisory Committee Act (Pub. L. 92-463), as amended, notice is hereby given that a meeting of the Dance Advisory Panel to the National Council on the Arts will be held October 1, 1978, from 9 a.m. to 6 p.m.; October 2, 1978, from 9 a.m. to 6 p.m.; October 3, 1978, from 9 a.m. to 5:45 p.m.; and October 4, 1978, from 9:15 a.m. to 5:45 p.m. at Radcliffe College, Hilles Library, corner of Garden and Shepard Streets, Cambridge, Mass.

A portion of this meeting will be open to the public on October 4, 1978, from 9:15 a.m. to 12:30 p.m. The topics of discussion will be guidelines for the dance touring program, and a workshop with the Boston dance community.

The remaining sessions of this meeting, on October 1, 1978, from 9 a.m. to 6 p.m.; October 2, 1978, 9 a.m. to 6 p.m.; October 3, 1978, 9 a.m. to 5:45 p.m.; and October 4, 1978, from 12:30 p.m. to 5:45 p.m. are for the purpose of Panel review, discussion, evaluation, and recommendation on applications for financial assistance under the National Foundation on the Arts and the Humanities Act of 1965, amended, including discussion of information given in confidence to the agency by grant applicants. In accordance with the determination of the Chairman published in the FEDERAL REGISTER March 17, 1977, these sessions will be closed to the public pursuant to subsections (c) (4), (6), and 9(b) of section 552b of Title 5, United States Code.

Further information with reference to this meeting can be obtained from Mr. John H. Clark, Advisory Committee Management Officer, National Endowment for the Arts, Washington, D.C. 20506, or call 202-634-6070.

JOHN H. CLARK, *Director, Office of Council and Panel Operations, National Endowment for the Arts.*

[FR Doc. 78-25354 Filed 9-8-78; 8:45 am]

[7536-01]

NATIONAL FOUNDATION ON THE ARTS AND THE HUMANITIES

HUMANITIES PANEL ADVISORY COMMITTEE

Meeting

SEPTEMBER 1, 1978.

Pursuant to the provisions of the Federal Advisory Committee Act (Pub. L. 92-463, as amended), notice is hereby given that a meeting of the Humanities Panel will be held at 806 15th Street NW., Washington, D.C. 20506, in room 314, from 9 a.m. to 5:30 p.m. on September 25, 1978.

The purpose of the meeting is to review NEH Summer Seminar applications in Anthropology and Sociology submitted to the National Endowment for the Humanities for projects beginning after January 1, 1979.

Because the proposed meeting will consider financial information and disclose information of a personal nature the disclosure of which would constitute a clearly unwarranted invasion of personal privacy, pursuant to authority granted me by the Chairman's Delegation of Authority to Close Advisory Committee Meetings, dated January 15, 1978, I have determined that the meeting would fall within exemptions (4) and (6) of 5 U.S.C. 552b(c) and that it is essential to close the meeting to protect the free exchange of internal views and to avoid interference with operation of the Committee.

It is suggested that those desiring more specific information contact the Advisory Committee Management Officer, Mr. Stephen J. McCleary, 806 15th Street NW., Washington, D.C. 20506 or call area code 202-724-0367.

STEPHEN J. MCCLEARY, *Advisory Committee Management Officer.*

[FR Doc. 78-25459 Filed 9-8-78; 8:45 am]

[7536-01]

HUMANITIES PANEL ADVISORY COMMITTEE

Meeting

SEPTEMBER 1, 1978.

Pursuant to the provisions of the Federal Advisory Committee Act (Pub. L. 92-463, as amended), notice is hereby given that a meeting of the Humanities Panel will be held at 806 15th Street NW., Washington, D.C. 20506, in room 314, from 9 a.m. to 5:30 p.m. on September 29, 1978.

The purpose of the meeting is to review NEH Summer Seminar applications in Political Science submitted to the National Endowment for the Humanities for projects beginning after January 1, 1979.

Because the proposed meeting will consider financial information and disclose information of a personal nature the disclosure of which would constitute a clearly unwarranted invasion of personal privacy, pursuant to authority granted me by the Chairman's Delegation of Authority to Close Advisory Committee Meetings, dated January 15, 1978, I have determined that the meeting would fall within exemptions (4) and (6) of 5 U.S.C. 552b(c) and that it is essential to close the meeting to protect the free exchange of internal views and to avoid interference with operation of the Committee.

It is suggested that those desiring more specific information contact the Advisory Committee Management Officer, Mr. Stephen J. McCleary, 806 15th Street NW., Washington, D.C. 20506 or call area code 202-724-0367.

STEPHEN J. MCCLEARY, *Advisory Committee Management Officer.*

[FR Doc. 78-25460 Filed 9-8-78; 8:45 am]

[7536-01]

HUMANITIES PANEL ADVISORY COMMITTEE

Meeting

AUGUST 30, 1978.

Pursuant to the provisions of the Federal Advisory Committee Act (Pub. L. 92-463, as amended), notice is hereby given that a meeting of the Humanities Panel will be held at 806 15th Street NW., Washington, D.C. 20506, in room 314, from 9 a.m. to 5:30 p.m. on October 2, 1978.

The purpose of the meeting is to review NEH Summer Seminar applications in Music submitted to the National Endowment for the Humanities for projects beginning after January 1, 1979.

Because the proposed meeting will consider financial information and disclose information of a personal nature the disclosure of which would constitute a clearly unwarranted invasion of personal privacy, pursuant to authority granted me by the Chairman's Delegation of Authority to Close Advisory Committee Meetings, dated January 15, 1978, I have determined that the meeting would fall within exemptions (4) and (6) of 5 U.S.C. 552b(c) and that it is essential to close the meeting to protect the free exchange of internal views and to avoid interference with operation of the Committee.

It is suggested that those desiring more specific information contact the Advisory Committee Management Officer, Mr. Stephen J. McCleary, 806 15th Street NW., Washington, D.C. 20506, or call area code 202-724-0367.

STEPHEN J. MCCLEARY,
Advisory Committee Management Officer.

[FR Doc. 78-25461 Filed 9-8-78; 8:45 am]

[7536-01]

HUMANITIES PANEL ADVISORY COMMITTEE

Meeting

AUGUST 30, 1978.

Pursuant to the provisions of the Federal Advisory Committee Act (Pub. L. 92-463, as amended), notice is hereby given that a meeting of the Humanities Panel will be held at 806 15th Street NW., Washington, D.C. 20506, in room 807, from 9 a.m. to 5:30 p.m. on October 2, 1978.

The purpose of the meeting is to review NEH Summer Seminar applications in Art History submitted to the National Endowment for the Humanities for projects beginning after January 1, 1979.

Because the proposed meeting will consider financial information and disclose information of a personal nature the disclosure of which would constitute a clearly unwarranted invasion of personal privacy, pursuant to authority granted me by the Chairman's Delegation of Authority to Close Advisory Committee Meetings, dated January 15, 1978, I have determined that the meeting would fall within exemptions (4) and (6) of 5 U.S.C. 552b(c) and that it is essential to close the meeting to protect the free exchange of internal views and to avoid interference with operation of the Committee.

It is suggested that those desiring more specific information contact the Advisory Committee Management Officer, Mr. Stephen J. McCleary, 806 15th Street NW., Washington, D.C. 20506, or call area code 202-724-0367.

STEPHEN J. MCCLEARY,
Advisory Committee Management Officer.

[FR Doc. 78-25462 Filed 9-8-78; 8:45 am]

[7536-01]

HUMANITIES PANEL ADVISORY COMMITTEE

Meeting

AUGUST 30, 1978.

Pursuant to the provisions of the Federal Advisory Committee Act (Pub. L. 92-463, as amended), notice is hereby given that a meeting of the Humanities Panel will be held at 806 15th Street NW., Washington, D.C. 20506, in room 314, from 9 a.m. to 5:30 p.m. on October 3, 1978.

The purpose of the meeting is to review NEH Summer Seminar applications in linguistics submitted to the National Endowment for the Humanities for projects beginning after January 1, 1979.

Because the proposed meeting will consider financial information and disclose information of a personal nature the disclosure of which would constitute a clearly unwarranted invasion of personal privacy, pursuant to authority granted me by the Chairman's Delegation of Authority to Close Advisory Committee Meetings, dated January 15, 1978, I have determined that the meeting would fall within exemptions (4) and (6) of 5 U.S.C. 552b(c) and that it is essential to close the meeting to protect the free exchange of internal views and to avoid interference with operation of the Committee.

It is suggested that those desiring more specific information contact the Advisory Committee Management Officer, Mr. Stephen J. McCleary, 806 15th Street NW., Washington, D.C. 20506, or call area code 202-724-0367.

STEPHEN J. MCCLEARY,
Advisory Committee Management Officer.

[FR Doc. 78-25463 Filed 9-8-78; 8:45 am]

[7536-01]

HUMANITIES PANEL ADVISORY COMMITTEE

Meeting

AUGUST 30, 1978.

Pursuant to the provisions of the Federal Advisory Committee Act (Pub. L. 92-463, as amended), notice is hereby given that a meeting of the Humanities Panel will be held at 806 15th Street NW., Washington, D.C. 20506, in room 807, from 9 a.m. to 5:30 p.m. on October 6, 1978.

The purpose of the meeting is to review NEH summer seminar applications in French submitted to the National Endowment for the Humanities for projects beginning after January 1, 1979.

Because the proposed meeting will consider financial information and disclose information of a personal nature the disclosure of which would constitute a clearly unwarranted invasion of personal privacy, pursuant to authority granted me by the Chairman's Delegation of Authority to Close Advisory Committee Meetings, dated January 15, 1978, I have determined that the meeting would fall within exemptions (4) and (6) of 5 U.S.C. 552b(c) and that it is essential to close the meeting to protect the free exchange of internal views and to avoid interference with operation of the Committee.

It is suggested that those desiring more specific information contact the Advisory Committee Management Officer, Mr. Stephen J. McCleary, 806 15th Street NW., Washington, D.C. 20506, or call area code 202-724-0367.

STEPHEN J. MCCLEARY,
Advisory Committee Management Officer.

[FR Doc. 78-25464 Filed 9-8-78; 8:45 am]

[7536-01]

ADVISORY COMMITTEE HUMANITIES PANEL

Meeting

AUGUST 30, 1978.

Pursuant to the provisions of the Federal Advisory Committee Act (Pub. L. 92-463, as amended), notice is hereby given that a meeting of the Humanities Panel will be held at 806 15th Street NW., Washington, D.C. 20506, in room 1130, from 9 a.m. to 5:30 p.m. on October 6, 1978.

The purpose of the meeting is to review NEH summer seminar applications in Spanish submitted to the National Endowment for the Humanities for projects beginning after January 1, 1979.

Because the proposed meeting will consider financial information and disclose information of a personal nature the disclosure of which would constitute a clearly unwarranted invasion of personal privacy, pursuant to authority granted me by the Chairman's Delegation of Authority to Close Advisory Committee Meetings, dated January 15, 1978, I have determined that the meeting would fall within exemptions (4) and (6) of 5 U.S.C. 552b(c) and that it is essential to close the meeting to protect the free exchange of internal views and to avoid interference with operation of the Committee.

It is suggested that those desiring more specific information contact the Advisory Committee Management Officer, Mr. Stephen J. McCleary, 806 15th Street NW., Washington, D.C. 20506 or call area code 202-724-0367.

STEPHEN J. MCCLEARY,
Advisory Committee Management Officer.

[FR Doc. 78-25465 Filed 9-8-78; 8:45 am]

[7536-01]

HUMANITIES PANEL ADVISORY COMMITTEE

Meeting

AUGUST 30, 1978.

Pursuant to the provisions of the Federal Advisory Committee Act (Pub. L. 92-463, as amended), notice is hereby given that a meeting of the Humanities Panel will be held at 806 15th Street NW., Washington, D.C.

20506, in room 314, from 9 a.m. to 5:30 p.m. on October 6 and 7, 1978.

The purpose of the meeting is to review NEH independent fellowship applications in all fields submitted to the National Endowment for the Humanities for projects beginning after January 1, 1979.

Because the proposed meeting will consider financial information and disclose information of a personal nature the disclosure of which would constitute a clearly unwarranted invasion of personal privacy, pursuant to authority granted me by the Chairman's Delegation of Authority to Close Advisory Committee Meetings, dated January 15, 1978, I have determined that the meeting would fall within exemptions (4) and (6) of 5 U.S.C. 552b(c) and that it is essential to close the meeting to protect the free exchange of internal views and to avoid interference with operation of the Committee.

It is suggested that those desiring more specific information contact the Advisory Committee Management Officer, Mr. Stephen J. McCleary, 806 15th Street NW., Washington, D.C. 20506, or call area code 202-724-0367.

STEPHEN J. MCCLEARY,
Advisory Committee, Management Officer.

[FR Doc. 78-25466 Filed 9-8-78; 8:45 am]

[7590-01]

NUCLEAR REGULATORY COMMISSION

[Docket No. 50-341]

DETROIT EDISON CO., ET AL (ENRICO FERMI ATOMIC POWER PLANT, UNIT 2)

Opportunity for Hearing

The Nuclear Regulatory Commission (the Commission) hereby gives notice of opportunity for hearing and for public participation in its consideration relating to issuance of an operating license to Detroit Edison Co., Northern Michigan Electric Cooperative, Inc. and Wolverine Electric Cooperative, Inc. (applicants) for operation of the Enrico Fermi Atomic Power Plant, Unit 2, located on the applicants' site in Frenchtown Township, Monroe County, Mich.

A prior notice published in the FEDERAL REGISTER on May 28, 1975 (40 FR 23122) announced that the Commission had received an application for facility operating license from the Detroit Edison Co. to possess, use, and operate the Enrico Fermi Atomic Power Plant, Unit 2, and the availability of the applicant's Environmental Report, Operating License Stage. The prior notice also described the Commission's review procedures and stated that the application and Environmental Report were available for public inspection at the Commission's Public Document Room, 1717 H Street, NW., Washington, D.C. 20555, and at the Monroe County Library System, 3700 South Custer Road, Monroe, Mich. 48161.

Finally, the prior notice stated that the Commission has commenced the radiological safety review of the application. However, since completion of construction had been extended until April 1979, the Commission postponed commencement of its environmental review so as to enable the Commission's staff to utilize the information which will be more current when the facility is ready for operation. Under those circumstances, the Commission determined that the issuance of the Notice of Opportunity for Hearing should be delayed. It is appropriate to issue such Notice of Opportunity for Hearing at this time.

The Commission will consider the issuance of a facility operating license to Detroit Edison Co., Northern Michigan Electric Cooperative, Inc. and Wolverine Electric Cooperative, Inc. which would authorize the applicants to possess, use and operate the Enrico Fermi Atomic Power Plant, Unit 2, in accordance with the provisions of the license and the technical specifications appended thereto, upon: (1) The completion of a favorable safety evaluation of the application by the Commission's staff; (2) the completion of the environmental review required by the Commission's regulations in 10 CFR part 51; (3) the receipt of a report on the applicants' application for a facility operating license by the Advisory Committee on Reactor Safeguards; and (4) a finding by the Commission that the application for the facility license, as amended, complies with the requirements of the Atomic Energy Act of 1954, as amended (the act), and the Commission's regulations in 10 CFR chapter 1. Construction of the facility was authorized by Construction Permit No. CPPR-87, issued by the Commission on September 26, 1972. Construction of Unit 2 is expected to be completed in 1980.

Prior to issuance of any operating license, the Commission will inspect the facility to determine whether it has been constructed in accordance with the application, as amended, and the provisons of the construction permit. In addition, the license will not be issued until the Commission has made the findings reflecting its review of the application under the act, which will be set forth in the proposed license, and has concluded that the issuance of the license will not be inimical to the common defense and security or to the health and safety of the public. Upon issuance of the license, the applicants will be required to execute an indemnity agreement as required by section 170 of the act and 10 CFR part 140 of the Commission's regulations.

By October 10, 1978, the applicant may file a request for a hearing with respect to issuance of the facility operating license and any person whose interest may be affected by this proceeding may file a petition for leave to intervene. Requests for a hearing and petitions for leave to intervene shall be filed in accordance with the Commission's "Rules of Practice for Domestic Licensing Proceedings" in 10 CFR part 2. If a request for a hearing or petition for leave to intervene is filed by the above date, the Commission or an Atomic Safety and Licensing Board, designated by the Commission or by the Chairman of the Atomic Safety and Licensing Board Panel, will rule on the request and/or petition and the Secretary of the Commission, or designated Atomic Safety and Licensing Board will issue a notoce of hearing or an appropriate order.

As required by 10 CFR 2.714, a petition for leave to intervene shall set forth with particularity the interest of the petitioner in the proceeding, and how that interest may be affected by the results of the proceeding. The petition should specifically explain the reasons why intervention should be permitted with particular reference to the following factors: (1) The nature of the petitioner's right under the act to be made a party to the proceeding; (2) the nature and extent of the petitioner's property, financial, or other interest in the proceeding; and (3) the possible effect of any order which may be entered in the proceeding on the petitioner's interest. The petition should also identify the specific aspect(s) of the subject matter of the proceeding as to which petitioner wishes to intervene. Any person who has filed a petition for leave to intervene or who has been admitted as a party may amend his petition, but such an amended petition must satisfy the specificity requirements described above.

Not later than fifteen (15) days prior to the first prehearing conference scheduled in the proceeding, the petitioner shall file a supplement to the petition to intervene which must include a list of the contentions which are sought to be litigated in the matter, and the bases for each contention set forth with reasonable specificity. A petitioner who fails to file such a supplement which satisfies these requirements with respect to at least one contention will not be permitted to participate as a party.

A request for a hearing or a petition for leave to intervene must be filed with the Secretary of the Commission, U.S. Nuclear Regulatory Commission, Washington, D.C. 20555, Attention: Docketing and Service Section, or may

be delivered to the Commission's Public Document Room, 1717 H Street NW., Washington, D.C. by October 10, 1978. A copy of the petition should also be sent to the Executive Legal Director, U.S. Nuclear Regulatory Commission, Washington, D.C. 20555, and to Eugene B. Thomas, Jr., Esq., LeBoeuf, Lamb, Leiby & MacRae, 1757 N Street NW., Washington, D.C. 20036 and Peter A. Marquardt, Esq., the Detroit Edison Co., 2000 Second Avenue, Detroit, Mich. 48226, attorneys for the applicants. Any questions or requests for additional information regarding the content of this notice should be addressed to the Chief Hearing Counsel, Office of the Executive Legal Director, U.S. Nuclear Regulatory Commission, Washington, D.C. 20555.

Nontimely filings of petitions for leave to intervene, amended petitions, supplemental petitions and/or requests for hearing will not be entertained absent a determination by the Commission, the presiding officer, or the Atomic Safety and Licensing Board designated to rule on the petition and/or request, that the petitioner has made a substantial showing of good cause for the granting of a late petition and/or request. That determination will be based upon a balancing of the factors specified in 10 CFR 2.714(d).

For further details pertinent to the matters under consideration, see the application for the facility operating license dated March 31, 1975 and the applicants' environmental report dated March 31, 1975, which are available for public inspection at the Commission's Public Document Room, 1717 H Street NW., Washington, D.C. and at the Monroe County Library System, 3700 South Custer Road, Monroe, Mich. As they become available, the following documents may be inspected at the above locations: (1) The safety evaluation report prepared by the Commission's staff; (2) the draft environmental statement; (3) the final environmental statement; (4) the report of the Advisory Committee on Reactor Safeguards on the application for facility operating license; (5) the proposed facility operating license; and (6) the technical specifications, which will be attached to the proposed facility operating license.

Copies of the proposed operating license and the ACRS report, when available, may be obtained by request to the Director, Division of Project Management, Office of Nuclear Reactor Regulation, U.S. Nuclear Regulatory Commission, Washington, D.C. 20555. Copies of the Commission's staff safety evaluation report and final environmental statement, when available, may be purchased at current rates, from the National Technical Information Service, Department of Commerce, 5285 Port Royal Road, Springfield, Va. 22161.

Dated at Bethesda, Md., this 16th day of August 1978.

For the Nuclear Regulatory Commission.

JOHN F. STOLZ,
Chief, Light Water Reactors Branch No. 1, Division of Project Management.

[FR Doc. 78-25238 Filed 9-8-78; 8:45 am]

[7590-01]

[Docket No. 50-320]

Metropolitan Edison Co., Jersey Central Power and Light Co., and Pennsylvania Electric Co.

ISSUANCE OF AMENDMENT TO FACILITY

Operating License

The U.S. Nuclear Regulatory Commission (the Commisson) has issued Amendment No. 7 to Facility Operating License No. DPR-73, issued to Metropolitan Edison Co. Jersey Central Power and Light Co., and Pennsylvania Electric Co., which revised Technical Specifications for operation of the Three Mile Island Nuclear Station, Unit No. 2, located in Dauphin County, Pa. The amendment is effective as of its date of issuance.

The amendment deletes an environmental condition in the license requiring detailed program description of the creel survey comparison of ichthyoplankton sampling gear, aerial remote sensing, and NRC nonroutine requirements which has been met. It also makes a minor administrative change in the Appendix B technical specification.

The applications for the amendment comply with the standards and requirements of the Atomic Energy Act of 1954, as amended (the Act), and the Commission's rules and regulations. The Commission has made appropriate findings as required by the Act and the Commission's rules and regulations in 10 CFR Chapter I, which are set forth in the license amendment. Prior public notice of this amendment was not required since the amendment does not involve a significant hazards consideration.

The Commission has determined that the issuance of this amendment will not result in any significant environmental impact and that pursuant to 10 CFR 51.5(d)(4) an environmental impact statement, or negative declaration and environmental impact appraisal need not be prepared in connection with issuance of this amendment.

For further details with respect to this action, see (1) the applications for amendment dated April 25, 1978, and May 19, 1978, and (2) Amendment No. 7 to License No. DPR-73. These items are available for public inspection at the Commission's Public Document Room, 1717 H Street NW., Washington, D.C. and at the Government Publications Section, State Library of Pennsylvania, Education Building, Commonwealth and Walnut Streets, Harrisburg, Pa. A copy of item (2) may be obtained upon request addressed to the U.S. Nuclear Regulatory Commission, Washington, D.C. 20555, Attention: Director, Division of Site Safety and Environmental Analysis.

Dated at Bethesda, Md., this 5th day of September 1978.

For the Nuclear Regulatory Commission.

JAN A. NORRIS,
Acting Chief, Environmental Projects Branch, Division of Site Safety and Environmental Analysis.

[FR Doc. 78-25405 Filed 9-8-78; 8:45 am]

[7590-01]

[Docket No. 50-466]

HOUSTON LIGHTING & POWER CO. (ALLENS CREEK NUCLEAR GENERATING STATION, UNIT 1)

Corrected Notice of Intervention Procedures [1]

On December 28, 1973, there was published at 38 FEDERAL REGISTER 35521 a notice that Houston Lighting & Power Co. had filed an application with the Atomic Energy Commission for a permit to construct Allens Creek Nuclear Generating Station, units 1 and 2 (station) at a site in southern Austin County, Tex., west of the Brazos River and about 45 miles west of the center of Houston. The notice provided that petitions for leave to intervene in the proceeding could be filed by January 24, 1974. The only petition filed was by the attorney general of the State of Texas.

A hearing was held on the application by an Atomic Safety and Licensing Board (Licensing Board) on March 11 and 12, 1975. Following that hearing the applicant notified the Licensing Board that its plans for the con-

[1] On May 31, 1978, there was published at 43 FR 23666 a notice of intervention procedures. The wording of the fourth paragraph of said notice was too limited in light of the Appeal Board's memorandum and order of Dec. 9, 1975, ALAB-301, 2 NRC 853 (1975). At page 855 of its memorandum and order, in affirming the Licensing Board's partial initial decision rendered on Nov. 11, 1975 (LBP-75-66, 2 NRC 776), the Appeal Board stated, among other things, that those findings by the Licensing Board in its partial initial decision are subject to later revision should further developments or new information so warrant. The initial notice of intervention procedures required correction. Certain other revisions in the instant corrected notice of intervention procedures should be duly noted.

struction of the station were indefinitely deferred. The Licensing Board, notwithstanding, issued a partial initial decision (LBP-75-66, 2 NRC 776 (1975)) in which certain findings of fact were made, and in which it was concluded at page 812 that the findings "have demonstrated no reason why the (station) site is not a suitable location for nuclear reactors of the general size and type proposed * * *" The Appeal Board's memorandum and order of December 9, 1975, ALAB-301, 2 NRC 853, in affirming the Licensing Board's partial initial decision, stated that those findings by the Licensing Board in its partial initial decision are subject to later revision should further developments or new information so warrant.

On August 19, 1977, the applicant advised the Board that it wished to resume licensing of only one of the two units previously planned and that it had amended its preliminary safety analysis report to show only one unit at the same site.[2] The amendments also included (among others) changes in plant layout and orientation, changes in the circulating water intake and discharge structures, and a reduction in the size of the cooling lake from 8,250 to 5,120 acres. These new plans for the proposed station may raise concerns that did not exist with respect to the former ones.

For the reasons set forth above, petitions for leave to intervene with respect to matters that have arisen because of the changes in the proposed plans for the station and with respect to new evidence or information that had not been available prior to the aforementioned Appeal Board's memorandum and order of December 9, 1975, may be filed on or before October 11, 1978.

Any person (other than those persons and organizations that have filed petitions for leave to intervene pursuant to the initial notice of intervention procedures and who were notified of corrective action taken in the Board's order of Aug. 14, 1978) who wishes to intervene as a party to this proceeding must file a written petition for leave to intervene in accordance with the provisions of 10 CFR 2.714.[3] A petition for leave to intervene shall set forth the interest of the petitioner in the proceeding, how that interest may be affected by the results of the proceedings, and any other contentions of the petitioner including the facts and reasons why he should be permitted to intervene, with particular reference to the following factors: (1) The nature of the petitioner's right under the Atomic Energy Act of 1954, as amended, 42 U.S.C. 2011-2281 (1970) to be made a party to the proceeding; (2) the nature and extent of the petitioner's property, financial, or other interest in the proceeding; and (3) the possible effect of any order which may be entered in the proceeding on the petitioner's interest. Any such petition must be supplemented (by the time set forth in 10 CFR § 2.714(b), as amended) by a list of the contentions, which the petitioner seeks to have litigated, arising from the proposed changes in the plant design and/or based upon new evidence or information that had not been available prior to the Appeal Board's memorandum and order of December 9, 1975, with the bases for each contention set forth with reasonable specificity.

Those permitted to intervene become parties to the proceeding, subject to any limitations in the order granting leave to intervene, and have the opportunity to participate fully in the conduct of the hearing, including the opportunity to present evidence and cross-examine witnesses.

Any petitions shall be filed by mail or telegram addressed to the Secretary of the Commission, U.S. Nuclear Regulatory Commission, Washington, D.C. 20555, Attention: Docketing and Services Branch, or may be filed by delivery to the Commission's Public Document Room, 1717 H Street NW., Washington, D.C. Pending further order of the Board, parties are required to file, pursuant to the provisions of 10 CFR § 2.708, an original and twenty (20) conformed copies of each such paper with the Commission. A copy of any petition for intervention should also be sent to the Executive Legal Director, U.S. Nuclear Regulatory Commission, Washington, D.C. 20555; to Counsel for Applicant, Robert Lowenstein, Esq., Lowenstein, Reis, Newman & Axelrad, 1025 Connecticut Avenue NW., Washington, D.C., 20037, and J. Gregory Copeland, Esq., Baker & Botts, 1 Shell Plaza, Houston, Tex. 77002; and to Richard Lowerre, Esq., Assistant Attorney General for the State of Texas, P.O. Box 12548, Capital Station, Austin, Tex. 78711.

Papers detailing the applications for a construction permit may be examined by the public at the Commission's Public Document Room, 1717 H Street NW., Washington, D.C. Copies of those same documents are also available at the Sealy Public Library, Sealy, Tex. 77474.

It is so ordered.

Dated at Bethesda, Md., this 1st day of September 1978.

For the Atomic Safety and Licensing Board.

SHELDON J. WOLFE, Esq.,
Chairman.

[FR Doc. 78-25403 Filed 9-8-78; 8:45 am]

[2]In an order dated Aug. 14, 1978, the Licensing Board granted applicant's motion to withdraw the application to construct and operate unit 2, without prejudice to the refiling of the application at a later time.

[3]This section, and other sections of 10 CFR Pt. 2, have been amended by changes effective May 26, 1978. See 43 FR 17798, Apr. 26, 1978.

[7590-01]

[Docket No. 50-219]

JERSEY CENTRAL POWER & LIGHT CO.

Proposed Issuance of Amendment to Provisional Operating License

The U.S. Nuclear Regulatory Commission (the Commission) is considering issuance of amendment to provisional operating license No. DPR-16 issued to the Jersey Central Power & Light Co. (the licensee) for operation of the Oyster Creek nuclear generating station (the facility), located in Ocean County, N.J.

The amendment would revise the maximum average planar linear heat generation rate (MAPLHGR) limits for certain types of fuel in accordance with the licensee's application for amendement dated May 30, 1978, as supplemented by letter dated June 6, 1978.

Prior to issuance of the proposed license amendment, the Commission will have made the findings required by the Atomic Energy Act of 1954, as amended (the Act), and the Commission's rules and regulations.

By October 11, 1978, the licensee may file a request for a hearing with respect to issuance of the amendment to the subject operating license and any person whose interest may be affected by this proceeding and who wishes to participate as a party in the proceeding must file a written petition for leave to intervene. Requests for a hearing and petitions for leave to intervene shall be filed in accordance with the Commission's "Rules of Practice for Domestic Licensing Proceedings" in 10 CFR Part 2. If a request for a hearing or petition for leave to intervene is filed by the above date, the Commission or an Atomic Safety and Licensing Board, designated by the Commission or by the Chairman of the Atomic Safety and Licensing Board Panel, will rule on the request and/or petition and the Secretary of the designated Atomic Safety and Licensing Board will issue a notice of hearing or an appropriate order.

As required by 10 CFR 2.714, a petition for leave to intervene shall set forth with particularity the interest of the petitioner in the proceeding, how that interest may be affected by the results of the proceeding. The petition should specifically explain the reasons why intervention should be permitted with particular reference to the following factors: (1) The nature of the petitioner's right under the Act to be

made a party to the proceeding; (2) the nature and extent of the petitioner's property, financial, or other interest in the proceeding; and (3) the possible effect of any order which may be entered in the proceeding on the petitioner's interest. The petition should also identify the specific aspect(s) of the subject matter of the proceeding as to which the petitioner wishes to intervene. Any person who has filed a petition for leave to intervene or who has been admitted as a party may amend his petition, but such an amended petition must satisfy the specificity requirements described above. Not later than fifteen (15) days prior to the first prehearing conference scheduled in the proceeding, the petitioner shall file a supplement to his petition to intervene, which must include a list of the contentions which he seeks to have litigated in the matter, and the bases for each contention set forth with reasonable specificity. A petitioner who fails to file such a supplement which satisfies these requirements with respect to at least one contention will not be permitted to participate as a party.

Those permitted to intervene become parties to the proceeding, subject to any limitations in the order granting leave to intervene, and have the opportunity to participate fully in the conduct of the hearing, including the opportunity to present evidence and cross-examine witnesses.

A request for a hearing or a petition for leave to intervene shall be filed with the Secretary of the Commission, U.S. Nuclear Regulatory Commission, Washington, D.C. 20555, Attention: Docketing and Services Section, or may be delivered to the Commission's Public document Room, 1717 H Street NW., Washington, D.C., by the above date. A copy of the petition should also be sent to the Executive Legal Director, U.S. Nuclear Regulatory Commission, Washington, D.C. 20555, and to G. F. Trowbridge, Esq., Shaw, Pittman, Potts & Trowbridge, 1800 M Street NW., Washington, D.C. 20036, attorney for the licensee.

Nontimely filings of petitions for leave to intervene, amended petitions, supplemental petitions, and/or requests for hearing will not be entertained absent a determination by the Commission, the presiding officer or the Atomic Safety and Licensing Board designated to rule on the petition and/or request, that the petition and/or request should be granted based upon a balancing of the factors specified in 10 CFR 2.714(a) (i)-(v) and 2.714(d).

For further details with respect to this action, see the application for amendment dated May 30, 1978, and supplement thereto dated June 6, 1978, which are available for public inspection at the Commission's Public Document Room, 1717 H Street NW., Washington, D.C., and at the Ocean County Library, Brick Township Branch, 401 Chambers Bridge Road, Brick Town, N.J. 08723.

Dated at Bethesda, Md., this 15th day of September 1978.

For the Nuclear Regulatory Commission.

DENNIS L. ZIEMANN,
Chief, Operating Reactors Branch No. 2, Division of Operating Reactors.

[FR Doc. 78-25402 Filed 9-8-78; 8:45 am]

[7590-01]

ADVISORY COMMITTEE ON REACTOR SAFEGUARDS SUBCOMMITTEE ON SAFEGUARDS AND SECURITY

Meeting

The ACRS Subcommittee on Safeguards and Security will hold a meeting on September 26, 1978, in Room 1046, 1717 H Street NW., Washington, D.C. 20555, to review the NRC Research Program on Safeguards and Security. Notice of this meeting was published at 43 FR 30631 and 36152, July 17 and August 15, 1978, respectively.

In accordance with the procedures outlined in the FEDERAL REGISTER on October 31, 1977 (42 FR 56972), oral or written statements may be presented by members of the public, recordings will be permitted only during those portions of the meeting when a transcript is being kept, and questions may be asked only by members of the subcommittee, its consultants, and staff. Persons desiring to make oral statements should notify the designated Federal Employee as far in advance as practicable so that appropriate arrangements can be made to allow the necessary time during the meeting for such statements.

The agenda for subject meeting shall be as follows:

TUESDAY, SEPTEMBER 26, 1978

8:30 A.M. UNTIL THE CONCLUSION OF BUSINESS

The subcommittee may meet in executive session, with any of its consultants who may be present, to explore and exchange their preliminary opinions regarding matters which should be considered during the meeting and to discuss the Subcommitee's preparation of a report to the full committee on reactor safeguards and security.

At the conclusion of the executive session, the subcommittee will hear presentations by and hold discussions with representatives of the NRC Staff, the Department of Energy, and their consultants, pertinent to the above topics. The subcommittee may then caucus to determine whether the matters identified in the initial session have been adequately covered and whether the project is ready for review by the full committee.

It may be necessary for the subcommittee to hold one or more closed sessions for the purpose of exploring matters involving proprietary information or matters specifically exempted from disclosure in the interest of national security. I have determined, in accordance with subsection 10(d) of Pub. L. 92-463, that, should such sessions be required, it is necessary to close these sessions to protect proprietary information (5 U.S.C. 552b(c)(4)) or in the interest of national security (5 U.S.C. 552b(c)(1)).

Further information regarding topics to be discussed, whether the meeting has been canceled or rescheduled, the chairman's ruling on requests for the opportunity to present oral statements and the time allotted therefore can be obtained by a prepaid telephone call to the designated Federal employee for this meeting, Mr. John C. McKinley (telephone 202-634-3265), between 8:15 a.m. and 5 p.m., e.d.t.

Dated: September 6, 1978.

JOHN C. HOYLE,
Advisory Committee Management Officer.

[FR Doc. 78-25573 Filed 9-8-78; 8:45 am]

[8010-01]

SECURITIES AND EXCHANGE COMMISSION

[File No. 1-5345]

PUERTO RICO TELEPHONE CO.

Application To Withdraw From Listing and Registration

SEPTEMBER 5, 1978.

The above-named issuer has filed an application with the Securities and Exchange Commission (the "Commission") pursuant to section 12(d) of the Securities Exchange Act of 1934 and rule 12d2-2(d) promulgated thereunder, to withdraw the specified securities from listing and registration on the New York Stock Exchange, Inc. ("NYSE").

The reasons alleged in the application for withdrawing these securities from listing and registration include the following:

The 7.40 percent, 8.70 percent, and 8.10 percent debentures of Puerto Rico Telephone Co. (the "Company") are being withdrawn from listing and registration because the Company believes that due to the limited distribution of its securities, the expense of complying with the Commission's reporting requirements is not justified. The Company has reported that there are less than 300 recordholders for each of the above-listed debenture issues. The NYSE has posed no objection in this matter.

Any interested person may, on or before October 6, 1978, submit by letter to the Secretary of the Securities and Exchange Commission, Washington, D.C. 20549, facts bearing upon whether the application has been made in accordance with the rules of the Exchange and what terms, if any, should be imposed by the Commission for the protection of investors. An order granting the application will be issued after the date mentioned above, on the basis of the application and any other information furnished by the Commission, unless it orders a hearing on the matter.

For the Commission, by the Division of Market Regulation, pursuant to delegated authority.

GEORGE A. FITZSIMMONS,
Secretary.

[FR Doc. 78-25355 Filed 9-8-78; 8:45 am]

[4710-02]

DEPARTMENT OF STATE

Agency for International Development

[Delegation of Authority No. 132]

ISRAEL

Delegation of Authority With Respect to Administration of A.I.D. Program

Pursuant to the authority delegated to me by Delegation of Authority No. 104 from the Secretary of State, dated November 3, 1961 (26 FR 10608), I hereby delegate to the principal diplomatic officer of the United States in Israel, with respect to the administration of the foreign assistance program within the country to which he is accredited, the authorities delegated to Directors of Missions of the Agency for International Development (A.I.D.) in unpublished Delegation of Authority of January 10, 1955, A.I.D. Handbooks, manual orders, regulations (published or otherwise), policy directives, policy determinations, memoranda or other instructions as these may be amended, supplemented or superseded from time to time.

The exercise of the authorities delegated herein shall be subject to the limitations applicable to the exercise of such authorities by A.I.D. Mission Directors.

The authority delegated herein may be redelegated to the officer at the post principally responsible for A.I.D. activities and may be exercised by persons who are performing the functions of such officer in an "acting" capacity.

This delegation of authority shall be effective immediately.

Dated: May 31, 1978.

JOHN J. GILLIGAN,
Administrator.

[FR Doc. 78-25470 Filed 9-8-78; 8:45 am]

[4910-14]

DEPARTMENT OF TRANSPORTATION

Coast Guard

[CGD78-119]

RULES OF THE ROAD ADVISORY COMMITTEE

Meeting

Pursuant to section 10(a)(2) of the Federal Advisory Committee Act (Pub. L. 92-463; U.S.C. App. I), notice is hereby given of a special meeting of the Rules of the Road Advisory Committee to be held Wednesday and Thursday, October 25 and 26, 1978, beginning at 9 a.m. each day in the Garden Room of the Lenox Hotel, St. Louis, Mo.

The agenda for the meeting is as follows:

1. Welcome.
2. Adoption of agenda.
3. Adoption of the minutes of the July 12 and 13, 1978 meeting.
4. Consideration of the Annexes being developed to unify the present Inland, Western Rivers, Great Lakes, and Pilot Rules.
5. Consideration of proposed amendments to the International Regulations for Preventing Collisions at Sea, 1972 (72 COLREGS) to be presented at the January 1979 meeting of the International Maritime Consultative Organization's Subcommittee on the Safety of Navigation.
6. Consideration of needs for a common frequency and mandatory monitoring of ship-shore communications with drawbridges.
7. Any other business.

Attendance is open to the public. With the approval of the Chairman, members of the public may present oral statements at the meeting. Persons wishing to present oral statements should notify Captain D. B. Charter Jr., Executive Director, Rules of the Road Advisory Committee, c/o Commandant (G-WLE/73), U.S. Coast Guard, 400 Seventh Street SW., Washington, D.C. 20590, 202-426-4959, not later than the day before the meeting. Information about the meeting and any of the agenda items may be obtained from the above address. A member of the public may present a written statement to the Committee at any time.

Issued in Washington, D.C., September 1, 1978.

W. W. BARROW,
Rear Admiral, U.S. Coast Guard, Chief, Office of Marine Environment and Systems.

FR Doc. 78-25287 Filed 9-8-78; 8:45 am]

[4910-14]

SHIP STRUCTURE COMMITTEE

Meeting

Pursuant to section 10(a)(2) of the Federal Advisory Committee Act (Pub. L. 92-463; 5 U.S.C. App. I) notice is hereby given of a meeting of the Ship Structure Committee to be held Thursday, October 12, 1978, at 10 A.M. in the 7th Floor Conference Room, American Bureau of Shipping, 45 Broad Street, New York, N.Y. The agenda for this meeting is as follows: The Committee will conduct its regular business and will discuss the marine structural research programs and needs of the member agencies.

Attendance is open to the interested public. With the approval of the Chairman, members of the public may present oral statements at the hearing. Persons wishing to attend and persons wishing to present oral statements at the meeting should notify LCDR T. H. Robinson, USCG, Secretary, Ship Structure Committee, U.S. Coast Guard Headquarters, Washington, D.C. 20590, 202-426-2295, not later than the day before the meeting. Any member of the public may present a written statement to the Committee at any time.

September 5, 1978.

H. H. BELL,
Rear Admiral, U.S. Coast Guard, Chief, Office of Merchant Marine Safety.

[FR Doc. 78-25294 Filed 9-8-78; 8:45 am]

[4910-59]

National Highway Traffic Safety Administration

SAFETY, BUMPER, AND CONSUMER INFORMATION PROGRAMS

Public Meeting

The National Highway Traffic Safety Administration (NHTSA) will hold a meeting on October 18, 1978, to answer questions from the public and industry regarding the agency's safety, bumper, and consumer information programs. The meeting will be held in the Conference Room of the Environmental Protection Agency's Motor Vehicle Environmental Laboratory Facility, 2565 Plymouth Road, Ann Arbor, Mich. The meeting will begin at 10:30 a.m., run until 1 p.m., and reconvene at 2 p.m., if necessary.

This meeting is being held in response to requests that the agency has received over the last year for periodic public technical meetings modeled after those conducted by the Environmental Protection Agency (EPA) for its motor vehicle emissions program.

Given the differences between the EPA vehicle emissions program and the NHTSA vehicle safety and bumper programs, this agency has some reservations about the utility of its holding periodic public technical meetings. Specifically, EPA's program being geared to certifying industry compliance with statutory emissions standards generates many technical questions. The NHTSA program is geared to the administrative development of safety performance standards and consumer standards with the industry responsible for self-certification. While there are certainly some technical and interpretive questions generated by the NHTSA programs, there are also just as many policy questions raised regarding the justification for NHTSA's standards. The NHTSA believes that the rulemaking process is the appropriate medium through which to address such policy questions. To determine whether such periodic technical meetings can be sufficiently productive and mutually beneficial, the agency has decided to schedule three meetings (October 18, 1978; December 13, 1978; and February 21, 1979).

The questions for the meetings must relate to the agency's vehicle safety, bumper, or consumer information program and be technical, interpretive or procedural in nature. The questions may relate to the research and development, rulemaking, or enforcement (including defects) phases of these programs. (Questions regarding this agency's fuel economy program will continue to be addressed at the EPA's meetings on vehicle emissions.) Questions for the October 18 meeting must be submitted in writing to William Marsh, NHTSA Executive Secretary, Room 5215, 400 Seventh Street SW., Washington, D.C. 20590. Only questions submitted in this manner and received not later than September 29 will be answered at the meeting. The individual, group, or company submitting a question does not have to be present at the meeting for the question to be answered. A transcript will be made and will be available for public inspection in the NHTSA Technical Reference Section in Washington, D.C., within 3 weeks after the meeting.

An agenda consisting of the questions submitted in a timely and proper fashion will be available at the NHTSA Technical Reference Section several days before the meeting and at the meeting itself.

Issued on September 1, 1978.

MICHAEL M. FINKELSTEIN,
Acting Associate Administrator for Rulemaking.

[FR Doc. 78-25237 Filed 9-5-78; 12:29 pm]

[4810-22]

DEPARTMENT OF THE TREASURY

Customs Service

AMOXICILLIN TRIHYDRATE FROM SPAIN

Receipt of Countervailing Duty Petition and Initiation of Investigation

AGENCY: U.S. Customs Service, Treasury Department.

ACTION: Initiation of countervailing duty investigation.

SUMMARY: This notice is to advise the public that a petition has been received and an investigation is being initiated to determine whether or not benefits which constitute a bounty or grant within the meaning of the countervailing duty law are granted by the Government of Spain to manufacturers or exporters of amoxicillin trihydrate. A preliminary determination will be made no later than January 27, 1979, and a final determination no later than July 27, 1979.

EFFECTIVE DATE: September 11, 1978.

FOR FURTHER INFORMATION CONTACT:

Mary S. Clapp, Operations Officer, Duty Assessment Division, U.S. Customs Service, 1301 Constitution Avenue NW., Washington, D.C. 20229, telephone 202-566-5492.

SUPPLEMENTARY INFORMATION: A petition in satisfactory form was received on July 27, 1978, alleging that payments made by the Government of Spain to manufacturers or exporters of amoxicillin trihydrate constitute the payment or bestowal of a bounty or grant within the meaning of section 303, Tariff Act of 1930, as amended (19 U.S.C. 1303). Imports covered by this investigation are classifiable under item 407.8517, Tariff Schedules of the United States Annotated (TSUSA).

The bounties or grants are allegedly bestowed as a result of the operation of the "Desgravacion Fiscal" system of remitting or rebating certain elements of the Spanish turnover tax. This has been the subject of previous investigations by the Department of the Treasury and is currently the subject of a review of the principles to be applied as indicated in the notice published on August 29, 1978 (43 FR 38658).

Pursuant to section 303(a)(4) of the Tariff Act of 1930, as amended (19 U.S.C. 1303(a)(4)), the Secretary of the Treasury is required to issue a preliminary determination as to whether or not any bounty or grant is being paid or bestowed within the meaning of the statute within 6 months of the receipt of a petition in proper form and a final decision within 12 months of the receipt of such petition. Therefore, a preliminary determination on this petition will be made no later than January 27, 1979, and a final determination will be issued no later than July 27, 1979. Such determinations will reflect the results of the review described above.

This notice is published pursuant to section 303(a)(3) of the Tariff Act of 1930, as amended (19 U.S.C. 1303(a)(3)), and section 159.47(c), Customs regulations (19 CFR 159.47)(c)).

Pursuant to Reorganization Plan No. 26 of 1950 and Treasury Department order 190 (revision 15), March 16, 1978, the provisions of Treasury Department order 165, revised, November 2, 1954, and section 159.47 of the Customs regulations (19 CFR 159.47), insofar as they pertain to the initiation of a countervailing duty investigation by the Commissioner of Customs, are hereby waived.

HENRY C. STOCKELL, JR.
Acting General Counsel of the Treasury.

SEPTEMBER 1, 1978.

[FR Doc. 78-25401 Filed 9-8-78; 8:45 am]

[8320-01]

VETERANS ADMINISTRATION

ADMINISTRATOR'S EDUCATION AND REHABILITATION ADVISORY COMMITTEE

Meeting

The Veterans Administration gives notice that a meeting of the Administrator's Education and Rehabilitation Advisory Committee, authorized by section 1792, title 38, United States Code, will be held at the Veterans Administration Central Office, 810 Vermont Avenue NW., Washington, D.C., on October 12, 1978, at 9 a.m. The meeting will be for the purpose of reviewing the progress and status of the five studies of the Veterans Administration's Education and Rehabilitation Programs as mandated by certain provisions of Pub. L. 95-202.

The meeting will be open to the public up to the seating capacity of the conference room. Because of the limited seating capacity, and the need for building security, it will be necessary for those wishing to attend to contact Mr. C. L. Dollarhide, Deputy Director, Education and Rehabilitation Service, Veterans Administration Central Office, phone: 202-389-2152, prior to October 5.

Interested persons may attend, appear before, or file statements with the committee. Statements, if in written form, may be filed before or within 10 days after the meeting. Oral statements will be heard at 2:30 p.m. on October 12, 1978.

By direction of the Administrator:

Dated: September 3, 1978.

RUFUS H. WILSON,
Deputy Administrator.

[FR Doc. 78-25406 Filed 9-8-78; 8:45 am]

[7035-01]

INTERSTATE COMMERCE COMMISSION

[Notice No. 711]

ASSIGNMENT OF HEARINGS

SEPTEMBER 6, 1978.

Cases assigned for hearing, postponement, cancellation, or oral argument appear below and will be published only once. This list contains prospective assignments only and does not include cases previously assigned hearing dates. The hearings will be on the issues as presently reflected in the Official Docket of the Commission. An attempt will be made to publish notices of cancellation of hearings as promptly as possible, but interested parties should take appropriate steps to insure that they are notified of cancellation or postponements of hearings in which they are interested.

No. AB 10 (Sub-11), Norfolk and Western Railway Co. Abandonment between New Castle and Rushville, in Henry and Rush Counties, IN, and No. AB 10 (Sub-12), Norfolk and Western Railway Co. Abandonment, between Connersville and New Castle, in Henry, Wayne, and Fayette Counties, IN, is now assigned September 11, 1978, at New Castle, IN, is postponed to November 13, 1978 (1 week) at New Castle, IN, in a hearing room to be later designated.

MC 143249 (Sub-2), Mid-Eastern Transportation, Inc., Common Carrier Application, now assigned September 6, 1978 (1 day), at Nashville, TN, is postponed to November 29, 1978 (3 days), at Nashville, TN, in a hearing room to be later designated.

I&S 9194, Wheat and wheat products, Official Territory, and No. 35825, Board of Trade of the City of Chicago C. The Akron, Canton & Youngstown Railroad Co., et al., now assigned October 10, 1978, at Washington, DC, is canceled and reassigned for prehearing conference on October 10, 1978, at the offices of the Interstate Commerce Commission, Washington, DC, with cost and other studies of respondents remaining due on September 25, 1978.

MC 144154, 336825 Ontario Limited, now assigned September 6, 1978, at Buffalo, NY, is postponed to September 13, 1978 (3 days), at Buffalo, NY, in Room 1440, Federal Building, 111 West Huron Street.

MC 121412 (Sub-6), Suburban Lines, Inc., now assigned September 6, 1978, at Pittsburgh, PA, is postponed indefinitely.

MC 142048 (Sub-7), Pacific Transportation Lines, Inc., now assigned September 13, 1978, at Buffalo, NY, is postponed indefinitely.

MC 135874 (Sub-108F), LTL Perishables, Inc., now assigned for hearing on October 12, 1978 (2 days), at Chicago, IL, in a hearing room to be later designated.

AB 55 (Sub-13), Seaboard Coast Line Railroad Co., Abandonment between Arcadia and Port Boca Grande in DeSoto, Sarasota, Charlotte, and Lee Counties, FL, now assigned October 24, 1978, at the offices of the Interstate Commerce Commission, Washington, DC.

MC 142059 (Sub-24F), Cardinal Transport, Inc., now being assigned for hearing on October 11, 1978 (1 day), at Chicago, IL, in a hearing room to be later designated.

MC 144512F, Bud's Service, Inc., now being assigned for hearing on October 12, 1978 (2 days), at Chicago, IL, in a hearing room to be later designated.

MC 140329 (Sub-94F), Cargo Contract Carrier Corp., now being assigned for hearing on October 16, 1978 (1 day), at Chicago, IL, in a hearing room to be later designated.

MC 143743 (Sub-1), Fulton Trucking Co., Inc., now assigned for hearing on September 11, 1978, at Atlanta, GA, is postponed indefinitely.

MC 11592 (Sub-19), Best Refrigerated Express, Inc., now assigned September 13, 1978, at Omaha, NE, is canceled and application dismissed.

MC-C 9906, CF Tank Lines, Inc., et al., V. Zirbel Transport, Inc., now assigned September 21, 1978, at Portland, OR, is postponed to September 26, 1978, at Portland, OR (3 days), in 320 Mohawk Building, 222 South West Morrison.

MC 144283F, Evans Reliable Messenger, Inc., is assigned for hearing September 20, 1978, at New Haven, CN, and will be held at New Haven Courthouse (the new courthouse), Wall and Church Street.

MC 105813 (Sub-232F), Belford Trucking Co., Inc., is assigned for hearing September 25, 1978, at New York, NY, and will be held at the Drake Hotel, 440 Park Avenue.

MC 143999, Allied International Trucking Co., Inc., now assigned for hearing on September 20, 1978, at Boston, MA, is postponed indefinitely.

H. G. HOMME, Jr.,
Acting Secretary.

[FR Doc. 78-25535 Filed 9-8-78; 8:45 am]

[7035-01]

[Exemption No. 8-A]

EXEMPTION UNDER PROVISIONS OF RULE 19 OF THE MANDATORY CAR SERVICE RULES ORDERED IN EX PARTE NO. 241

SEPTEMBER 6, 1978.

To: All railroads.—Upon further consideration of Exemption No. 8 issued July 18, 1972.

It is ordered, That, under authority vested in me by Car Service Rule 19, Exemption No. 8 to the Mandatory Car Service Rules ordered in Ex Parte No. 241 is vacated and set aside.

This order shall become effective September 1, 1978.

Issued at Washington, D.C., August 29, 1978.

INTERSTATE COMMERCE COMMISSION,
JOEL E. BURNS,
Agent.

[FR Doc. 78-25538 Filed 9-8-78; 8:45 am]

[7035-01]

[Twenty-Second Revised Exemption No. 129]

EXEMPTION UNDER PROVISION OF RULE 19 OF THE MANDATORY CAR SERVICE RULES ORDERED IN EX PARTE NO. 241

SEPTEMBER 6, 1978.

It appearing, that the railroads named herein own numerous 40-ft. plain boxcars; that under present conditions, there is virtually no demand for these cars on the lines of the car owners; that return of these cars to the car owners would result in their being stored idle on these lines; that such cars can be used by other carriers for transporting traffic offered for shipments to points remote from the car owners; and that compliance with Car Service Rules 1 and 2 prevents such use of plain boxcars owned by the railroads listed herein, resulting in unnecessary loss of utilization of such cars.

It is ordered, That, pursuant to the authority vested in me by Car Service Rule 19, plain boxcars described in the Official Railway Equipment Register, I.C.C.-R.E.R. No. 403, issued by W. J. Trezise, or successive issues thereof, as having mechanical designation "XM", with inside length 44-ft. 6-in. or less, regardless of door width and bearing reporting marks assigned to the railroads named below, shall be exempt from the provisions of Car Service Rules 1(a), 2(a), and 2(b).

Atlanta & Saint Andrews Bay Railway Co.
Reporting marks: ASAB.
Chicago, West Pullman & Southern Railroad Co.
Reporting marks: CWP.
Detroit and Mackinac Railway Co.
Reporting marks: D&M-DM.
Illinois Terminal Railroad Co.
Reporting marks: ITC.
Louisville, New Albany & Corydon Railroad Co.
Reporting marks: LNAC.
Richmond, Fredericksburg and Potomac Railroad Co.
Reporting marks: RFP.
Southern Railway Co.[1]

Effective 12:01 a.m., September 1, 1978, and continuing in effect until further order of this Commission.

Issued at Washington, D.C., August 25, 1978.

INTERSTATE COMMERCE COMMISSION,
JOEL E. BURNS,
Agent.

[FR Doc. 78-25539 Filed 9-8-78; 8:45 am]

[1] Deleted.

[7035-01]

[Amendment No. 2 To Exemption No. 149]

EXEMPTION UNDER PROVISIONS OF RULE 19 OF THE MANDATORY CAR SERVICE RULES ORDERED IN EX PARTE NO. 241

SEPTEMBER 6, 1978.

To: All railroads.—Upon further consideration of Exemption No. 149 issued April 28, 1978.

It is ordered, That, under authority vested in me by Car Service Rule 19, Exemption No. 149 to the Mandatory Car Service Rules ordered in Ex Parte No. 241 is amended to expire October 31, 1978.

This amendment shall become effective August 31, 1978.

Issued at Washington, D.C., August 25, 1978.

INTERSTATE COMMERCE COMMISSION,
JOEL E. BURNS,
Agent.

[FR Doc. 78-25540 Filed 9-8-78; 8:45 am]

[7035-01]

[Amendment No. 5 To Exemption No. 143]

EXEMPTION UNDER PROVISIONS OF RULE 19 OF THE MANDATORY CAR SERVICE RULES ORDERED IN EX PARTE NO. 241

SEPTEMBER 6, 1978.

To: All railroads.—Upon further consideration of Exemption No. 143 issued January 26, 1978.

It is ordered, That, under authority vested in me by Car Service Rule 19, Exemption No. 143 to the Mandatory Car Service Rules ordered in Ex Parte No. 241 is amended to expire October 31, 1978.

This amendment shall become effective August 31, 1978.

Issued at Washington, D.C., August 25, 1978.

INTERSTATE COMMERCE COMMISSION,
JOEL E. BURNS,
Agent.

[FR Doc. 78-25542 Filed 9-8-78; 8:45 am]

[7035-01]

FOURTH SECTION APPLICATIONS FOR RELIEF

SEPTEMBER 6, 1978.

This application for long-and-short-haul relief has been filed with the I.C.C.

Protests are due at the I.C.C. on or before September 26, 1978.

FSA No. 43599, Traffic Executive Association-Eastern Railroads, Agent's E.R. No. 3073, rates on sanitary paper and related articles, between points within official territory, in its Tariff 703-B, I.C.C. 366. Grounds for relief-revised rate structure.

By the Commission.

H. G. HOMME, Jr.,
Acting Secretary.

[FR Doc. 78-25536 Filed 9-8-78; 8:45 am]

[7035-01]

IRREGULAR-ROUTE MOTOR COMMON CARRIERS OF PROPERTY-ELIMINATION OF GATEWAY LETTER NOTICES

AUGUST 30, 1978.

The following letter-notices of proposals to eliminate gateways for the purpose of reducing highway congestion, alleviating air and noise pollution, minimizing safety hazards, and conserving fuel have been filed with the Interstate Commerce Commission under the Commission's Gateway Elimination Rules (49 CFR 1065), and notice thereof to all interested persons is hereby given as provided in such rules.

An original and two copies of protests against the proposed elimination of any gateway herein described may be filed with the Interstate Commerce Commission on or before September 21, 1978. A copy must also be served upon applicant or its representative. Protests against the elimination of a gateway will not operate to stay commencement of the proposed operation.

Successively filed letter-notices of the same carrier under these rules will be numbered consecutively for convenience in identification. Protests, if any, must refer to such letter-notices by number.

The following applicants seek to operate as a common carrier, by motor vehicles, over irregular routes.

MC 61825 (Sub-E404), (correction), filed May 13, 1974, published in the FEDERAL REGISTER issue of October 8, 1975, and republished, as corrected, this issue. Applicant: ROY STONE TRANSFER CORP., P.O. Box 385, Collinsville, VA 24078. Representative: Harry J. Jordan, 1000 16th Street NW., Washington, DC 20036. *New furniture,* from points in VA north of a line beginning at the MD-VA State line, and extending along U.S. Hwy 15 to junction VA Hwy 9, then along VA Hwy 9 to junction VA Hwy 7, then along VA Hwy 7 to junction U.S. Hwy 340, then along U.S. Hwy 340 to junction VA Hwy 277, then along VA Hwy 277 to junction VA Hwy 629, then along VA Hwy 629 to junction VA Hwy 55, then along VA Hwy 55 to the VA-WV State line to those points in ND, SD, and NE on and west of a line beginning at the ND-MN State line, and extending along U.S. Hwy 2 to junction I Hwy 29, then along I Hwy 29 to junction ND Hwy 15, then along ND Hwy 15 to junction ND Hwy 18, then along ND Hwy 18 to junction ND Hwy 200, then along ND Hwy 200 to junction ND Hwy 32, then along ND Hwy 32 to junction I Hwy 94, then along I Hwy 94 to junction ND Hwy 1, then along ND Hwy 1 to the ND-SD State line, and extending along SD Hwy 37 to junction SD Hwy 10, then along SD Hwy 10 to junction U.S. Hwy 281, then along U.S. Hwy 281 to junction SD Hwy 26, then along SD Hwy 26 to junction SD Hwy 45, then along SD Hwy 45 to junction SD Hwy 44, then along SD Hwy 44 to junction SD Hwy 50, then along SD Hwy 50 to junction U.S. Hwy 281, then along U.S. Hwy 281 to the SD-NE State line, then along U.S. Hwy 281 to junction NE Hwy 92, then along NE Hwy 92 to junction NE Hwy 14, then along NE Hwy 14 to junction NE Hwy 66, then along NE Hwy 66 to junction U.S. Hwy 81, then along U.S. Hwy 81 to junction U.S. Hwy 34, then along U.S. Hwy 34 to junction U.S. Hwy 77, then along U.S. Hwy 77 to junction NE Hwy 2, then along NE Hwy 2 to the NE-IA State line, then along the NE-IA State line to the NE-MO State line, then along NE-MO State line to the NE-KS State line and to points in AZ, CA, CO, ID, MT, NM, NV, OR, UT, WA, and WY. (Gateways eliminated: Lynchburg and Smyth Counties, VA.)

NOTE.—The purpose of this republication is to state the correct highway description and to delete a portion of the territorial description.

MC 61825 (Sub-E405), (correction), filed May 13, 1974, published in the FEDERAL REGISTER issue of October 8, 1975, and republished, as corrected, this issue. Applicant: ROY STONE TRANSFER CORP., P.O. Box 385, Collinsville, VA 24078. Representative: Harry J. Jordan, 1000 16th Street NW., Washington, DC 20036. *New furniture,* from points in NC on and west of a line beginning at the TN-NC State line, and extending along U.S. Hwy 441 to junction U.S. Hwy 19, then along U.S. Hwy 19 to junction NC Hwy 28, then along NC Hwy 28 to junction unnumbered hwy near Stecoah, NC, then along unnumbered hwy to junction U.S. Hwy 129, then along U.S. Hwy 129 to junction U.S. Hwy 19, then along U.S. Hwy 19 to junction unnumbered hwy near Nantahala, then along unnumbered hwy through Kyle and Aquone to junction U.S. Hwy 64, then along U.S. Hwy 64 to junction U.S. Hwy 23, then along U.S. Hwy 23 to the NC-GA State line to those points in CA, ID, MT, OR, and WA on, north and west of a line beginning at the U.S.-Canada International Boundary line, and extending along Interstate Hwy 15 to junction MT Hwy 215, then along MT Hwy 215 to junction MT Hwy 213, then along MT Hwy 213 to junction U.S. Hwy 2, then along U.S. Hwy 2 to junction U.S. Hwy 93, then

along U.S. Hwy 93 to junction MT Hwy 28, then along MT Hwy 28 to junction MT Hwy 200, then along MT Hwy 200 to junction MT Hwy 461, then along MT Hwy 461 to junction Interstate Hwy 90, then along Interstate Hwy 90 to junction ID Hwy 3, then along ID Hwy 3 to junction U.S. Hwy 12, then along U.S. Hwy 12 to the ID-WA State line, then along U.S. Hwy 12 to junction WA Hwy 126, then along WA Hwy 126 to junction U.S. Hwy 12, then along U.S. Hwy 12 to junction WA Hwy 125, then along WA Hwy 125 to the WA-OR State line, then along OR Hwy 11 to junction U.S. Hwy 30, then along U.S. Hwy 30 to junction U.S. Hwy 395, then along U.S. Hwy 395 to the OR-CA State line, then along U.S. Hwy 395 to junction CA Hwy 299, then along CA Hwy 299 to junction CA Hwy 139, then along CA Hwy 139 to junction CA Hwy 36, then along CA Hwy 36 to junction CA Hwy 89, then along CA Hwy 89 to junction CA Hwy 70, then along CA Hwy 70 to junction CA Hwy 65, then along CA Hwy 65 to junction Interstate Hwy 80, then along Interstate Hwy 80 to junction Interstate Hwy 5, then along Interstate Hwy 5 to junction CA Hwy 16, then along CA Hwy 16 to junction CA Hwy 20, then along CA Hwy 20 to the Pacific Ocean near Noyo, CA. (Gateways eliminated: Lynchburg and Smyth Counties, VA.)

NOTE.—The purpose of this republication is to state the correct territorial description.

MC 61825 (Sub-E406) (correction), filed May 13, 1974, published in the FEDERAL REGISTER isssue of October 8, 1975, and republished, as corrected, this issue. Applicant: ROY STONE TRANSFER CORP., P.O. Box 385, Collinsville, VA 24078. Representative: Harry J. Jordan, 1000 16th Street NW., Washington, DC 20036. *New furniture*, from points in NC on and bounded by a line beginning at the TN-NC State line, and extending along U.S. Hwy 441 to junction U.S. Hwy 19, then along U.S. Hwy 19 to junction NC Hwy 28, then along NC Hwy 28 to junction unnumbered hwy near Stecoah, then along unnumbered hwy to junction U.S. Hwy 129, then along U.S. Hwy 129 to junction U.S. Hwy 19, then along U.S. Hwy 19 to junction unnumbered hwy near Nantahala, then along unnumbered hwy through Kyle and Aquone to junction U.S. Hwy 64, then along U.S. Hwy 64 to junction U.S. Hwy 23, then along U.S. Hwy 23 to the NC-GA State line, then along the NC-GA State line to the NC-SC State line, then along the NC-SC State line to junction U.S. Hwy 276, then along U.S. Hwy 276 to junction U.S. Hwy 19A, then along U.S. Hwy 19A to junction NC Hwy 209, then along NC Hwy 209 to junction U.S. Hwy 25, then along U.S. Hwy 25 to the NC-TN State line, then along the NC-TN State line to the point of beginning to those points in CA, ID, MT, NV, OR, and WA on and west of a line beginning at the U.S.-Canada International Boundary line at Port of Whitlask, MT, and extending along unnumbered hwy to junction U.S. Hwy 2, then along U.S. Hwy 2 to junction MT Hwy 223, then along MT Hwy 223 to junction U.S. Hwy 87, then along U.S. Hwy 87 to junction MT Hwy 200, then along MT Hwy 200 to junction U.S. Hwy 12, then along U.S. Hwy 12 to the MT-ID State line, then along U.S. Hwy 12 to junction ID Hwy 13, then along ID Hwy 13 to junction U.S. Hwy 95, then along U.S. Hwy 95 to the ID-OR State line, then along U.S. Hwy 95 to the OR-NV State line, then along U.S. Hwy 95 to junction U.S. Hwy 50, then along U.S. Hwy 50 to the NV-CA State line, then along U.S. Hwy 50 to junction I Hwy 80, then along I Hwy 80 to junction CA Hwy 113, then along CA Hwy 113 to junction CA Hwy 12, then along CA Hwy 12 to junction I Hwy 80, then along I Hwy 80 to junction I Hwy 680, then along I Hwy 680 to junction CA Hwy 84, then along CA Hwy 84 to the Pacific Ocean near San Gregorio, CA. (Gateways eliminated: Lynchburg, and Smyth Counties, VA.)

NOTE.—The purpose of this republication is to reflect the correct highway description.

MC 61825 (Sub-E459), (correction), filed May 13, 1974, published in the FEDERAL REGISTER issue of October 3, 1975, and republished, as corrected, this issue. Applicant: ROY STONE TRANSFER CORP., P.O. Box 385, Collinsville, VA 24078. Representative: Harry J. Jordan, 1000 Sixteenth Street NW., Washington, DC 20036. *New furniture*, from Roanoke, VA, to points in IL, IN, IA, MI, MO, NY, and WI, and those points in DE, NJ, OH, and PA on and north of a line beginning at the IN-OH State line, and extending along the Ohio River to junction I Hwy 75, then along I Hwy 75 to junction OH Hwy 4, then along OH Hwy 4 to junction U.S. Hwy 68, then along U.S. Hwy 68 to junction U.S. Hwy 36, then along U.S. Hwy 36 to junction OH Hwy 4, then along OH Hwy 4 to junction OH Hwy 309, then along OH Hwy 309 to junction U.S. Hwy 30, then along U.S. Hwy 30 to junction OH Hwy 585, then along OH Hwy 585 to junction OH Hwy 21, then along OH Hwy 21 to junction I Hwy 76, then along I Hwy 76 to junction OH Hwy 91, then along OH Hwy 91 to junction U.S. Hwy 20, then along U.S. Hwy 20 to junction PA Hwy 8, then along PA Hwy 8 to French Creek, then along French Creek to the PA-NY State line, then along PA-NY State line to junction PA Hwy 187, then along PA Hwy 187 to junction PA Hwy 467, then along PA Hwy 467 to junction PA Hwy 706, then along PA Hwy 706 to junction PA Hwy 167, then along PA Hwy 167 to junction U.S. Hwy 11, then along U.S. Hwy 11 to junction PA Hwy 106, then along PA Hwy 106 to junction U.S. Hwy 6, then along U.S. Hwy 6 to junction NJ Hwy 23, then along NJ Hwy 23 to junction NJ Hwy 517, then along NJ Hwy 517 to junction NJ Hwy 15, then along NJ Hwy 15 to junction NJ Hwy 513, then along NJ Hwy 513 to junction PA Hwy 32, then along PA Hwy 32 to junction PA Hwy 611, then along PA Hwy 611 to junction PA Hwy 113, then along PA Hwy 113 to junction PA Hwy 100, then along PA Hwy 100 to Wilmington, DE, then to the Delaware River, then along the Delaware River to the Delaware Bay, then along the Delaware Bay to the Atlantic Ocean. (Gateway eliminated: Martinsville, VA.)

NOTE.—The purpose of this republication is to reflect the correct spelling of French Greek which should read as "French Creek."

MC 61825 (Sub-E462) (correction), filed May 13, 1974, published in the FEDERAL REGISTER issue of October 3, 1975, and republished, as corrected, this issue. Applicant: ROY STONE TRANSFER CORP., P.O. Box 385, Collinsville, VA 24078. Representative: Harry J. Jordan, 1000 16th Street NW, Washington, DC 20036. *New furniture*, from Dublin, VA, to points in DE, IA, and NJ, and those points in IL, MI, MO, and WI on and northwest of a line beginning at Dorena, MO, and extending along MO Hwy 77 to junction MO Hwy 80, then along MO Hwy 80 to junction MO Hwy 105, then along MO Hwy 105 to junction U.S. Hwy 60, then along U.S. Hwy 60 to junction MO Hwy 77, then along MO Hwy 77 to junction U.S. Hwy 61, then along U.S. Hwy 61 to junction IL Hwy 146, then along IL Hwy 146 to junction U.S. Hwy 51, then along U.S. Hwy 51 to junction IL Hwy 185, then along IL Hwy 185 to junction IL Hwy 127, then along IL Hwy 127 to junction IL Hwy 16, then along IL Hwy 16 to junction U.S. Hwy 66, then along U.S. Hwy 66 to junction IL Hwy 108, then along IL Hwy 108 to junction IL Hwy 111, then along IL Hwy 111 to junction IL Hwy 104, then along IL Hwy 104 to junction U.S. Hwy 36, then along U.S. Hwy 36 to junction IL Hwy 78, then along IL Hwy 78 to junction U.S. Hwy 34, then along U.S. Hwy 34 to junction U.S. Hwy 51, then along U.S. Hwy 51 to junction WI Hwy 15, then along WI Hwy 15 to Milwaukee, WI, then to Lake Michigan, then across Lake Michigan to Ludington, MI, then along U.S. Hwy 10 to junction U.S. Hwy 31, then along U.S. Hwy 31 to junction MI Hwy 55, then along MI Hwy 55 to junction MI Hwy 37, then along MI Hwy 37 to junction MI Hwy 42, then along MI Hwy 42 to junction U.S. Hwy 131, then along U.S. Hwy

131 to junction MI Hwy 72, then along MI Hwy 72 to Harrisville, MI, then to Lake Huron, and those points in MD, NY, and PA on and northeast of a line beginning at Dunkirk, NY, and extending along NY Hwy 60 to junction NY Hwy 17, then along NY Hwy 17 to junction NY Hwy 280, then along NY Hwy 280 to junction PA Hwy 346, then along PA Hwy 346 to junction PA Hwy 321, then along PA Hwy 321 to junction U.S. Hwy 219, then along U.S. Hwy 219 to junction PA Hwy 255, then along PA Hwy 255 to junction PA Hwy 153, then along PA Hwy 153 to junction U.S. Hwy 322, then along U.S. Hwy 322 to junction PA Hwy 879, then along PA Hwy 879 to junction Interstate Hwy 80, then along Interstate Hwy 80 to junction U.S. Hwy 15, then along U.S. Hwy 15 to junction PA Hwy 61, then along PA Hwy 61 to junction PA Hwy 183, then along PA Hwy 183 to junction U.S. Hwy 22, then along U.S. Hwy 22 to junction PA Hwy 501, then along PA Hwy 501 to junction PA Hwy 272, then along PA Hwy 272 to junction PA Hwy 372, then along PA Hwy 372 to junction PA Hwy 74, then along PA Hwy 74 to junction PA Hwy 425, then along PA Hwy 425 to junction PA Hwy 851, then along PA Hwy 851 to junction Interstate Hwy 83, then along Interstate Hwy 83 to junction U.S. Hwy 1, then along U.S. Hwy 1 to junction MD Hwy 197, then along MD Hwy 197 to junction U.S. Hwy 301, then along U.S. Hwy 301 to junction MD Hwy 4, then along MD Hwy 4 to the Patuxent River, then along the Patuxent River to the Chesapeake Bay, then along the Chesapeake Bay to the MD-VA State line, then along the MD-VA State line to the Atlantic Ocean. (Gateway eliminated: Martinsville, VA.)

NOTE.—The purpose of this republication is to state the correct territorial description that was repeated in prior publication and was deleted this publication.

MC 61825 (Sub-E466) (correction), filed May 13, 1974, published in the FEDERAL REGISTER issue of October 1, 1975, and republished, as corrected, this issue. Applicant: ROY STONE TRANSFER CORP., P.O. Box 385, Collinsville, VA 24078. Representative: Harry J. Jordan, 1000 Sixteenth Street NW., Washington, DC 20036. *Materials used in the manufacture of furniture,* from points in PA on, east and south of a line beginning on the MD-PA State line, then north along Interstate Hwy 83 to junction U.S. Hwy 30, then east along U.S. Hwy 30 to junction U.S. Hwy 222, then north along U.S. Hwy 222 to junction Pennsylvania Turnpike Extension, then north along the Pennsylvania Turnpike Extension to junction U.S. Hwy 22, then east along U.S. Hwy 22 to junction PA Hwy 512, then north along PA Hwy 512 to junction PA Hwy 191, then north along PA Hwy 191 to junction Interstate Hwy 80, then east along Interstate Hwy 80 to the PA-NJ State line, to points in KY on and south of a line beginning at the IL-KY State line, then east along KY Hwy 56 to junction U.S. Hwy 60, then east along U.S. Hwy 60 to junction U.S. Hwy 41, then south along U.S. Hwy 41 to junction the Audubon Parkway, then east along the Audubon Parkway to junction KY Hwy 54, then east along KY Hwy 54 to junction U.S. Hwy 62, then east along U.S. Hwy 62 to junction KY Hwy 224, then east along KY Hwy 224 to junction KY Hwy 357, then north along KY Hwy 357 to junction U.S. Hwy 31E, then east along U.S. Hwy 31E to junction KY Hwy 84, then east along KY Hwy 84 to junction U.S. Hwy 68, then east along U.S. Hwy 68 to junction KY Hwy 34, then east along KY Hwy 34 to junction KY Hwy 52, then east along KY Hwy 52 to junction KY Hwy 21, then east along KY Hwy 21 to junction U.S. Hwy 421, then east along U.S. Hwy 421 to junction KY Hwy 30, then east along KY Hwy 30 to junction KY Hwy 542, then east along KY Hwy 542 to junction KY Hwy 404, then east along KY Hwy 404 to junction U.S. Hwy 23, then north along U.S. Hwy 23 to junction KY Hwy 302, then east along KY Hwy 302 to junction KY Hwy 3, then east along KY Hwy 3 to junction KY Hwy 40, then east along KY Hwy 40 to the KY-WV State line. (Gateway eliminated: Martinsville, VA.)

NOTE.—The purpose of this republication is to state the correct territorial description that was omitted in previous publication.

MC 83539 (Sub-E347), filed May 31, 1977. Applicant: C&H TRANSPORTATION CO., INC., 2010 West Commerce Street, Dallas, TX 75222. Representative: Douglas Anderson (same as above). *Commodities,* the transportation of which, because of their size or weight, require the use of special equipment and *related machinery, parts, materials, and supplies* when moving in connection with such commodities, (A) between points in AL in and west of Madison, Marshall, Blount, Jefferson, Shelby, Chilton, Dallas, Wilcox, Clarke, and Mobile Counties, on the one hand, and, on the other, points in NJ; (B) between points in AL on the one hand, and, on the other, points in NJ in, north and east of Hunterdon, Somerset, Middlesex, Monmouth, and Ocean Counties. (Gateway eliminated: Points within a 50-mile radius of Nashville, TN; KY; PA; and points within a 50-mile radius of Nashville, TN, VA, and PA.)

MC 83539 (Sub-E348), filed May 31, 1977. Applicant: C&H TRANSPORTATION CO., INC., 2010 West Commerce Street, Dallas, TX 75222. Representative: Douglas Anderson (same as above). *Commodities,* the transportation of which, because of their size or weight, require the use of special equipment and *related machinery, parts, materials, and supplies* when moving in connection with such commodities, between points in AL, on the one hand, and, on the other, points in NY. (Gateway eliminated: Points within a 50-mile radius of Nashville, TN, Philadelphia, PA, and points in KY.)

MC 83539 (Sub-E355), filed May 31, 1977. Applicant: C&H TRANSPORTATION CO., INC., 2010 West Commerce Street, Dallas, TX 75222. Representative: Douglas Anderson (same as above). *Commodities,* the transportation of which, because of their size or weight, require the use of special equipment and *related machinery, parts, materials, and supplies* when moving in connection with such commodities, between points in AR, on the one hand, and, on the other, points in Upper Peninsula of MI. No service shall be performed in the stringing or picking up of any of the above commodities in connection with main or trunk pipelines. (Gateway eliminated: Points in KY or IN.)

MC 83539 (Sub-E378), filed June 6, 1977. Applicant: C&H TRANSPORTATION CO., INC., 2010 West Commerce Street, Dallas, TX 75222. Representative: Douglas Anderson (same as above). *Commodities,* the transportation of which, because of their size or weight, require the use of special equipment, and *parts,* thereof, when moving in connection with such commodities, between points in DC, on the one hand, and, on the other, points in IL. Restriction: No service shall be performed in the stringing or picking up of any of the above commodities in connection with main or trunk pipelines. (Gateway eliminated: Points in IN.)

MC 96324 (Sub-E45), filed February 9, 1976. Applicant: GENERAL DELIVERY INC., P.O. Box 1816, Fairmont, WV. Representative: Harold G. Hernly, Jr., 118 North St. Asaph Street, Alexandria, VA 22314. *Containers and closures for containers,* except commodities in bulk, (1) from points in Fayette, Raleigh, Wyoming, Summers, Monroe, and Mercer Counties, WV, and points in Greenbrier County, WV, on, south and west of U.S. Hwy 60, to points in NJ; NY; points in OH on, north and east of OH Hwy 14; Salem, OH; and points in PA except points in Greene, Fayette, and Washington Counties; (2) from points in Mercer, Monroe, Summers, Nicholas, Pocahontas Counties, WV, and points in Greenbrier County, WV, on, north and east of U.S. Hwy 60, to points in NJ; NY; points in PA except points in Greene, Fayette, Washington, and Al-

legheny Counties; and points in OH in, east or north of Cuyahoga, Summitt, Mahoning, and Columbania Counties; (3) from points in Harrison, Doddridge, Ritchie, Tucker, Calhoun, Gilmer, and Lewis Counties, WV, to points in NJ and points in NY except Chautauqua County; (4) from points in Cabell, Wayne, Mason, Mingo, Logan, Lincoln, Putnam, Kanawha, Clay, Roane, and Boone Counties, WV, to points in NJ; Johnstown, PA; and points in PA on and east of U.S. Hwy 219; and those points in NY on and east of Cattaragus, Wyoming, Genessee, and Orleans Counties; (5) from points in Hancock, Brooke, Ohio, and Marshall Counties, WV, to points in NJ; points in Fulton, Franklin, Adams, and Cumberland Counties, PA, and those points in PA on and east of U.S. Hwy 15; (6) from points in Jackson, Wood, Wirt, and Pleasants Counties, WV, to points in NJ, and those points in PA on and east of Somerset, Cambria, Clearfield, Cameron, and McKean Counties; (7) from points in Wetzel, Marvin, Monongalia, Taylor, and Barbour Counties, WV, to points in NJ; points in Fulton, Franklin, Cumberland, and Adams Counties, PA; and those points in PA and NY on and east of U.S. Hwy 15; (8) from points in Upshur, Braxton, Webster, Randolph, and Pendleton Counties, WV, to points in NJ; NY; and PA except points in Allegheny, Westmoreland, Washington, Fayette, Greene, Somerset, Beaver, Butler, Lawrence, and Mercer Counties; (9) from points in Grant, Hardy, Mineral, Hampshire, Morgan, Berkeley, and Jefferson Counties, WV, to points in NJ, PA, NY, OH, and KY. (Gateway eliminated: Points in WV within the commercial zone of Cumberland, MD.)

MC 112304 (Sub-E451), filed May 1, 1978. Applicant: ACE DORAN HAULING & RIGGING CO., 1601 Blue Rock Street, Cincinnati, OH 45223. Representative: A. Charles Tell, Suite 1800, 100 East Broad Street, Columbus, OH 43215. *Guardrail and component parts*, from points in VA on and east of U.S. Hwy 220 to points in SD. Limitation: The certificate in MC 112304 (Sub-65) shall be of no further force and effect after August 9, 1980. (Gateway eliminated: Clarksburg, WV, and 50 miles within Clarksburg, WV, and Lima, OH.)

MC 112304 (Sub-E452), filed May 1, 1978. Applicant: ACE DORAN HAULING & RIGGING CO., 1601 Blue Rock Street, Cincinnati, OH 45223. Representative: A. Charles Tell, Suite 1800, 100 East Broad Street, Columbus, OH 43215. *Guardrail and component parts*, from points in VA on and east of U.S. Hwy 220 to points in MN. Limitation: The certificate in MC 112304 (Sub-65) shall be of no further force and effect after August 9, 1980. (Gateway eliminated: Clarksburg, WV, and 50' miles within Clarksburg, WV, and Lima, OH.)

MC 112304 (Sub-E453), filed May 1, 1978. Applicant: ACE DORAN HAULING & RIGGING CO., 1601 Blue Rock Street, Cincinnati, OH 45223. Representative: A. Charles Tell, Suite 1800, 100 East Broad Street, Columbus, OH 43215. *Guardrail and component parts*, from points in VA on and east of U.S. Hwy 220 to points in WI. Limitation: The certificate in MC 112304 (Sub-65) shall be of no further force and effect after August 9, 1980. (Gateway eliminated: Clarksburg, WV, and 50 miles within Clarksburg, WV, and Lima, OH.)

MC 112304 (Sub-E479), filed May 1, 1978. Applicant: ACE DORAN HAULING & RIGGING CO., 1601 Blue Rock Street, Cincinnati, OH 45223. Representative: A. Charles Tell, Suite 1800, 100 East Broad Street, Columbus, OH 43215. *Guardrail and component parts*, from points in OH, except those points in Hamilton and Clermont Counties, OH, to points in TX. Limitation: The certificate in MC 112304 (Sub-65) shall be of no further force and effect after August 9, 1980. (Gateway eliminated: Lima, OH.)

MC 112304 (Sub-E517), filed May 1, 1978. Applicant: ACE DORAN HAULING & RIGGING CO., 1601 Blue Rock Street, Cincinnati, OH 45223. Representative: A. Charles Tell, Suite 1800, 100 East Broad Street, Columbus, OH 43215. *Guardrail and component parts*, from points in NY to points in MI. "*Limitation:* The certificate in MC 112304 (Sub-65) shall be of no further force and effect after August 9, 1980." (Gateway eliminated: Lima, OH.)

MC 112304 (Sub-E546), filed May 1, 1978. Applicant: ACE DORAN HAULING & RIGGING CO., 1601 Blue Rock Street, Cincinnati, OH 45223. Representative: A. Charles Tell, Suite 1800, 100 East Broad Street, Columbus, OH 43215. *Guardrail and component parts*, from points in the Lower Peninsula of MI to points in TN on and east of TN Hwy 56. "*Limitation:* The certificate in MC 112304 (Sub-65) shall be of no further force and effect after August 9, 1980." (Gateway eliminated: Lima, OH.)

MC 117574 (Sub-E129), filed July 16, 1975, Applicant: DAILY EXPRESS, INC., P.O. Box 39, Carlisle, PA 17013. Representative: E. S. Moore, Jr. (same address as above). *Agricultural implements, agricultural machinery, tractors*, with or without attachments, *cranes, industrial and processing machinery, and attachments, accessories, and parts* of all of the above described commodities, which are also heavy machinery or contractors equipment, and are also machinery, commodities which because of size or weight require the use of special equipment or special handling, or self-propelled articles each weighing 15,000 pounds or more (when transported on trailers), between points in Cumberland, Harnett, and Lee Counties, NC, on the one hand, and, on the other, points in CA, ID, MT, NV, ND, OR, SD, UT, and WA; and points in AZ on and northwest of a line beginning at the U.S.-Mexico International Boundary Line extending along AZ Hwy 85 to junction U.S. Hwy 80, then along U.S. Hwy 80 to junction Interstate Hwy 17, then along Interstate Hwy 17 to junction U.S. Hwy 66, then along U.S. Hwy 66 to the AZ-NM State line; those points in CO on and northwest of a line beginning at the NM-CO State line extending along U.S. Hwy 550 to junction U.S. Hwy 160, then along U.S. Hwy 160 to junction CO Hwy 10, then along CO Hwy 10 to junction U.S. Hwy 50, then along U.S. Hwy 50 to the CO-KS State line; those points in IA on and north of a line beginning at the IA-NE State line extending along U.S. Hwy 30 to junction U.S. Hwy 59, then along U.S. Hwy 59 to junction IA Hwy 3, then along IA Hwy 3 to junction U.S. Hwy 169, then along U.S. Hwy 169 to junction U.S. Hwy 18, then along U.S. Hwy 18 to junction U.S. Hwy 218, then along U.S. Hwy 218 to the IA-MN State line; points in KS on and west of a line beginning at the KS-CO State line extending along U.S. Hwy 50 to junction KS Hwy 27, then along KS Hwy 27 to junction U.S. Hwy 36, then along U.S. Hwy 36 to junction U.S. Hwy 83, then along U.S. Hwy 83 to the KS-NE State line; points in MI on and northwest of a line beginning at the WI-MI State line extending along U.S. Hwy 45 to junction MI Hwy 28, then along MI Hwy 28 to junction U.S. Hwy 41, then along U.S. Hwy 41 to Lake Superior; points in MN on and northwest of a line beginning at the IA-MN State line extending along U.S. Hwy 218 to junction Interstate Hwy 90, then along Interstate Hwy 90 to junction U.S. Hwy 63, then along U.S. Hwy 63 to the MN-WI State line; points in NE on and northwest of a line beginning at the KS-NE State line extending along U.S. Hwy 83 to junction U.S. Hwy 6, then along U.S. Hwy 6 to junction U.S. Hwy 81, then along U.S. Hwy 81 to junction U.S. Hwy 30, then along U.S. Hwy 30 to the IA-NE State line; points in NM on and west of a line beginning at the AZ-NM State line extending along U.S. Hwy 66 to junction U.S. Hwy 666, then along U.S. Hwy 666 to junction U.S. Hwy 550, then along U.S. Hwy 550 to the NM-CO State line; points in OH on and east of a line beginning at Lake Erie extending along

OH Hwy 45 to junction U.S. Hwy 422, then along U.S. Hwy 422 to the PA-OH State line; points in WI on and west of a line beginning at the MN-WI State line extending along U.S. Hwy 63 to junction U.S. Hwy 8, then along U.S. Hwy 8 to junction U.S. Hwy 45, then along U.S. Hwy 45 to the MI-WI State line. (Gateway eliminated: Waynesboro, PA, and a point north of the PA-MD State line in York County and within the 25-mile radius of Baltimore, MD.)

MC 117574 (Sub-E136), filed January 20, 1976. Applicant: DAILY EXPRESS, INC., P.O. Box 39, Carlisle, PA 17013. Representative: E. S. Moore, Jr. (same address as above). (1) *Commodities,* the transportation of which, because of their size or weight, require the use of special equipment, and *related iron and steel and iron and steel products,* the transportation of which is incidental to the transportation of commodities which by reason of size or weight require special equipment, and (2) *self-propelled articles,* each weighing 15,000 pounds or more, and *related machinery, tools, parts, and supplies* moving in connection therewith, restricted in (2) to the transportation of commodities on trailers: (1) Between points in Daviess and Grundy Counties, MO, on the one hand, and, on the other, points in PA and WV; points in IN on and east of a line beginning at the KY-IN State line, and extending along IN Hwy 3 to junction IN Hwy 67, then along In Hwy 67 to the In-OH State line; points in KY on and east of U.S. Hwy 31W; points in MI on and east of a line beginning at the OH-MI State line, and extending along U.S. Hwy 23 to junction U.S. Hwy 10, then along U.S. Hwy 10 to junction MI Hwy 247, then along MI Hwy 247 to its termination at Saginaw Bay;

(2) Between points in Clark, Knox, and Lewis Counties, MO, on the one hand, and, on the other, points in PA and WV; points in IN on and east of a line beginning at the KY-IN State line, and extending along U.S. Hwy 421 to junction IN Hwy 3, then along IN Hwy 3 to junction Interstate Hwy 69, then along Interstate Hwy 69 to the IN-MI State line; points in KY on and east of a line beginning at Middlesboro, KY, and extending along U.S. Hwy 25 to junction U.S. Hwy 421, then along U.S. Hwy 421 to the KY-IN State line; points in MI on and east of a line beginning at the IN-MI State line, and extending along U.S. Hwy 27 to junction MI Hwy 46, then along MI Hwy 46 to junction Interstate Hwy 75, then along Interstate Hwy 75 to Bay City, MI;

(3) Between points in Harrison and Mercer Counties, MO, on the one hand, and, on the other, points in PA and WV; points in IN on and east of a line beginning at the KY-IN State line, and extending along U.S. Hwy 421 to junction IN Hwy 3, then along IN Hwy 3 to junction Interstate Hwy 69, then along Interstate Hwy 69 to the IN-MI State line; points in KY on and east of a line beginning at the TN-KY State line, and extending along KY Hwy 61 to junction KY Hwy 55, then along KY Hwy 55 to junction U.S. Hwy 421, then along U.S. Hwy 421 to the KY-IN State line; and points in MI on and east of a line beginning at the IN-MI State Line, and extending along U.S. Hwy 27 to junction Interstate Hwy 75, then along Interstate Hwy 75 to Mackinaw City, MI;

(4) Between points in Gentry and Worth Counties, MO, on the one hand, and, on the other, points in PA and WV; points in IN on and east of a line beginning at the KY-IN State Line, and extending along U.S. Hwy 421 to junction IN Hwy 9, then along IN Hwy 9 to junction Interstate Hwy 69, then along Interstate Hwy 69 to the IN-MI State Line; points in KY on and east of a line beginning at the TN-KY State Line, and extending along KY Hwy 61 to junction KY Hwy 55, then along KY Hwy 55 to junction U.S. Hwy 421, then along U.S. Hwy 421 to the KY-IN State Line; points in MI on and east of a line beginning at the IN-MI State Line, and extending along U.S. Hwy 27 to junction MI Hwy 115, then along MI Hwy 115 to junction MI Hwy 37, then along MI Hwy 37 to Traverse City, MI; and points in the Upper Peninsula of MI on and east of MI Hwy 77;

(5) Between points in Linn and Macon Counties, MO, on the one hand, and, on the other, points in PA and WV; points in IN on and east of a line beginning at the KY-IN State Line, and extending along IN Hwy 250 to junction IN Hwy 129, then along IN Hwy 129 to junction U.S. Hwy 421, then along U.S. Hwy 421 to junction IN Hwy 3, then along IN Hwy 3 to junction U.S. Hwy 27, then along U.S. Hwy 27 to the IN-MI State Line; points in KY on and east of a line beginning at the TN-KY State Line, and extending along U.S. Hwy 27 to junction U.S. Hwy 150, then along U.S. Hwy 150 to junction U.S. Hwy 127, then along U.S. Hwy 127 to the KY-IN State Line at Warsaw, KY; and points in MI on and east of a line beginning at the IN-MI State Line, and extending along U.S. Hwy 27 to junction Interstate Hwy 75, then along Interstate Hwy 75 to its termination at Sault Ste. Marie, MI;

(6) Between points in Carroll and Ray Counties, MO, on the one hand, and, on the other, points in PA and WV; points in IN on and east of a line beginning at the KY-IN State Line, and extending along IN Hwy 129 to junction U.S. Hwy 421, then along U.S. Hwy 421 to junction IN Hwy 3, then along IN Hwy 3 to the IN-MI State Line; points in KY on and east of a line beginning at the TN-KY State Line, and extending along U.S. Hwy 27 to junction U.S. Hwy 150, then along U.S. Hwy 105 to junction U.S. Hwy 127, then along U.S. Hwy 127 to the KY-IN State Line at Warsaw, KY; and points in MI on and east of a line beginning at the IN-MI State Line, and extending along MI Hwy 66 to junction MI Hwy 61, then along MI Hwy 61 to junction Interstate Hwy 75, then along Interstate Hwy 75 to its termination at Sault Ste. Marie, MI;

(7) Between points in Clay and Platte Counties, MO, on the one hand, and, on the other, points in PA and WV; points in IN on and east of a line beginning at the KY-IN State Line, and extending along U.S. Hwy 421 to junction IN Hwy 9, then along IN Hwy 9 to junction IN Hwy 28, then along IN Hwy 28 to junction IN Hwy 3, then along IN Hwy 3 to the IN-MI State Line; points in KY on and east of a line beginning at the TN-KY State Line, and extending along U.S. Hwy 27 to junction U.S. Hwy 150, then along U.S. Hwy 150 to junction U.S. Hwy 127, then along U.S. Hwy 127 to junction U.S. Hwy 421, then along U.S. Hwy 421 to the KY-IN State Line; points in MI on and east of a line beginning at the IN-MI State Line, and extending along U.S. Hwy 12 to junction U.S. Hwy 131, then along U.S. Hwy 131 to junction MI Hwy 113, then along MI Hwy 113 to junction MI Hwy 37, then along MI Hwy 37 to its termination at Lake Michigan; points in the Upper Peninsula of MI on and east of MI Hwy 77;

(8) Between points in Monroe and Randolph Counties, MO, on the one hand, and, on the other, points in PA and WV; points in IN on and east of a line beginning at the KY-IN State Line, and extending along IN Hwy 250 to junction IN Hwy 129, then along IN Hwy 129 to junction U.S. Hwy 421, then along U.S. Hwy 421 to junction IN Hwy 3, then along IN Hwy 3 to junction U.S. Hwy 27, then along U.S. Hwy 27 to the IN-MI State Line; points in KY on and east of a line beginning at the TN-KY State Line, and extending along U.S. Hwy 27 to junction U.S. Hwy 150, then along U.S. Hwy 150 to junction U.S. Hwy 127, then along U.S. Hwy 127 to the KY-IN State Line at Warsaw KY; points in MI on and east of a line beginning at the IN-MI State Line, and extending along U.S. Hwy 27 to junction Interstate Hwy 75, then along Interstate Hwy 75 to its termination at Sault Ste. Marie, MI;

(9) Between points in Jackson and Lafayette Counties, MO, on the one hand, and, on the other, points in PA and WV; points in IN on and east of a

line beginning at the KY-IN State Line, and extending along IN Hwy 1 to junction U.S. Hwy 35 then along U.S. Hwy 35 to junction IN Hwy 3, then along IN Hwy 3 to junction U.S. Hwy 33, then along U.S. Hwy 33 to junction IN Hwy 13, then along IN Hwy 13 to the IN-MI State Line; points in KY on and east of a line beginning at the TN-KY State Line, and extending along U.S. Hwy 27 to junction KY Hwy 80, then along KY Hwy 80 to junction Interstate Hwy 75, then along Interstate Hwy 75 to the KY-OH State Line; points in MI on and east of a line beginning at the IN-MI State Line, and extending along U.S. Hwy 131 to junction MI Hwy 37, then along MI Hwy 37 to Traverse City, MI;

(10) Between points in Montgomery and Warren Counties, MO, on the one hand, and, on the other, points in PA and WV; points in IN on and east of a line beginning at the KY-IN State Line, and extending along IN Hwy 262 to junction U.S. Hwy 50, then along U.S. Hwy 50 to junction U.S. Hwy 421, then along U.S. Hwy 421 to junction IN Hwy 3, then along IN Hwy 3 to junction U.S. Hwy 6, then along U.S. Hwy 6 to junction IN Hwy 13, then along IN Hwy 13 to the IN-MI State Line; points in KY on and east of a line beginning at the TN-KY State Line, and extending along Interstate Hwy 75 to junction KY Hwy 14, then along KY Hwy 14 to the KY-IN State Line; points in MI on and east of a line beginning at the IN-MI State Line, and extending along U.S. Hwy 131 to junction MI Hwy 37, then along MI Hwy 37 to Traverse City, MI; and points in the Upper Peninsula of MI on and east of MI Hwy 77;

(11) Between points in Lincoln County, MO, on the one hand, and, on the other, points in PA and WV; points in IN on and east of a line beginning at the KY-IN State Line, and extending along IN Hwy 56 to junction U.S. Hwy 50, then along U.S. Hwy 50 to junction IN Hwy 1, then along IN Hwy 1 to junction IN Hwy 3, then along IN Hwy 3 to junction U.S. Hwy 6, then along U.S. Hwy 6 to junction IN Hwy 13, then along IN Hwy 13 to the IN-MI State Line; points in KY on and east of a line beginning at the TN-KY State Line, and extending along Interstate Hwy 75 to junction KY Hwy 14, then along KY Hwy 14 to the KY-IN State Line; points in MI on and east of a line beginning at the IN-MI State Line, and extending along U.S. Hwy 131 to junction MI Hwy 37, then along MI Hwy 37 to Traverse City, MI; points in the Upper Peninsula of MI on and east of MI Hwy 77;

(12) Between points in Benton and Hickory Counties, MO, on the one hand, and, on the other, points in PA and WV; points in IN on and east of a line beginning at the IN-OH State Line, and extending along U.S. Hwy 50 to junction IN Hwy 3, then along IN Hwy 3 to junction Interstate Hwy 69, then along Interstate Hwy 69 to the IN-MI State Line; points in KY on and east of Interstate Hwy 75; points in MI on and east of a line beginning at the IN-MI State Line, and extending along U.S. Hwy 27 to junction U.S. Hwy 12, then along U.S. Hwy 12 to junction U.S. Hwy 127, then along U.S. Hwy 127 to junction U.S. Hwy 27, then along U.S. Hwy 27 to junction Interstate Hwy 75, then along Interstate Hwy 75 to its termination at Sault Ste. Marie, MI;

(13) Between points in Bates and Cass Counties, MO, on the one hand, and, on the other, points in PA and WV; points in IN on and east of a line beginning at the KY-IN State Line, and extending along IN Hwy 250 to junction IN Hwy 129, then along IN Hwy 129 to junction U.S. Hwy 421, then along U.S. Hwy 421 to junction IN Hwy 9, then along IN Hwy 9 to junction IN Hwy 5, then along IN Hwy 5 to junction U.S. Hwy 33, then along U.S. Hwy 33, then along U.S. Hwy 33 to junction IN Hwy 13, then along IN Hwy 13 to the IN-MI State Line; points in KY on and east of a line beginning at the TN-KY State Line, and extending along U.S. Hwy 27 to junction U.S. Hwy 150, then along U.S. Hwy 150 to junction U.S. Hwy 127, then along U.S. Hwy 127 to the KY-IN State Line at Warsaw, KY; points in MI on and east of a line beginning at the IN-MI State Line, and extending along U.S. Hwy 131 to junction MI Hwy 37, then along MI Hwy 37 to Traverse City, MI; points in the Upper Peninsula of MI on and east of MI Hwy 77;

(14) Between points in Chariton County, MO, on the one hand, and, on the other, points in PA and WV; points in IN on and east of U.S. Hwy 27; points in KY on and east of a line beginning at Middlesboro, KY, and extending along U.S. Hwy 25E to junction Interstate Hwy 75, then along Interstate Hwy 75 to junction KY-OH State line; points in MI on and east of a line beginning at the IN-MI State Line, and extending along U.S. Hwy 27 to Mackinaw City, MI;

(15) Between points in Cole and Moniteau Counties, MO, on the one hand, and, on the other, points in PA and WV; points in IN on and east of a line beginning at the KY-IN State Line, and extending along IN Hwy 262 to junction U.S. Hwy 50, then along U.S. Hwy 50 to junction U.S. Hwy 421, then along U.S. Hwy 421 to junction IN Hwy 3, then along IN Hwy 3 to junction U.S. Hwy 6, then along U.S. Hwy 6 to junction IN Hwy 13, then along IN Hwy 13 to the IN-MI State Line; points in KY on and east of a line beginning at the TN-KY State Line, and extending along Interstate Hwy 75 to junction KY Hwy 14, then along KY Hwy 14 to the KY-IN State Line; points in MI on and east of a line beginning at the IN-MI State Line, and extending along U.S. Hwy 131 to junction MI Hwy 37, then along MI Hwy 37 to Traverse City, MI; points in the Upper Peninsula of MI on and east of MI Hwy 77;

(16) Between points in Pike and Polk Counties, MO, on the one hand, and, on the other, points in PA and WV; points in IN on and east of U.S. Hwy 27; points in KY on and east of a line beginning at the TN-KY State Line, and extending along U.S. Hwy 25E to junction Interstate Hwy 75, then along Interstate Hwy 75 to the KY-OH State Line; and points in MI on and east of a line beginning at the IN-MI State Line, and extending along U.S. Hwy 27 to junction MI Hwy 32, then along MI Hwy 32 to its termination at Alpena, MI;

(17) Between points in Franklin County, MO, on the one hand, and, on the other, points in PA and WV; points in IN on and east of a line beginning at the KY-IN State Line, and extending along IN Hwy 56 to junction U.S. Hwy 50, then along U.S. Hwy 50 to junction IN Hwy 1, then along IN Hwy 1 to junction IN Hwy 3, then along IN Hwy 3 to junction U.S. Hwy 20, then along U.S. Hwy 20 to junction IN Hwy 13, then along IN Hwy 13 to the IN-MI State Line; points in KY on and east of a line beginning at the TN-KY State Line, and extending along U.S. Hwy 25E to junction KY Hwy 11, then along KY Hwy 11 to junction KY Hwy 36, then along KY Hwy 36 to junction U.S. Hwy 27, then along U.S. Hwy 27 to junction KY Hwy 17 to junction KY Hwy 14, then along KY Hwy 14 to the IN-KY State Line; points in MI on and east of a line beginning at the IN-MI State Line, and extending along U.S. Hwy 131 to junction MI Hwy 37, then along MI Hwy 37 to Traverse City, MI; and points in the Upper Peninsula of MI on and east of MI Hwy 77;

(18) Between points in Gasconade and Osage Counties, MO, on the one hand, and, on the other, points in PA and WV; points in IN on and east of U.S. Hwy 27; points in KY on and east of a line beginning at the TN-KY State Line, and extending along U.S. Hwy 25E to junction Interstate Hwy 75, then along Interstate Hwy 75 to the KY-OH State Line; points in MI on and east of a line beginning at the IN-MI State Line, and extending along U.S. Hwy 27 to Mackinaw City, MI;

(19) Between St. Louis, MO, on the one hand, and, on the other, points in PA and WV; points in IN on and east of a line beginning at the KY-IN State Line, and extending along IN Hwy 56

to junction U.S. Hwy 50, then along U.S. Hwy 50 to junction IN Hwy 1, then along IN Hwy 1 to junction IN Hwy 101, then along IN Hwy 101 to junction U.S. Hwy 20, then along U.S. Hwy 20 to junction IN Hwy 13, then along IN Hwy 13 to the IN-MI State Line; points in KY on and east of a line beginning at the KY-VA State Line, and extending along KY Hwy 160 to junction KY Hwy 7, then along KY Hwy 7 to junction KY Hwy 80, then along KY Hwy 80 to junction U.S. Hwy 460, then along U.S. Hwy 460 to junction KY Hwy 36, then along KY Hwy 36 to junction U.S. Hwy 27, then along U.S. Hwy 27 to junction KY Hwy 17, then along KY Hwy 17 to junction KY Hwy 14, then along KY Hwy 14 to the KY-IN State Line; points in MI on and east of a line beginning at the IN-MI State Line, and extending along U.S. Hwy 131 to junction MI Hwy 37, then along MI Hwy 37 to Traverse City, MI; points in the Upper Peninsula of MI on and east of MI Hwy 77;

(20) Between points in Crawford and Washington Counties, MO, on the one hand, and, on the other, points in PA and WV; points in IN on and east of a line beginning at the IN-OH State Line, and extending along U.S. Hwy 50 to junction IN Hwy 101, then along IN Hwy 101 to junction U.S. Hwy 27, then along U.S. Hwy 27 to junction Interstate Hwy 69, then along Interstate Hwy 69 to the IN-MI State Line; points in KY on and east of a line beginning at the KY-VA State Line, and extending along KY Hwy 932 to junction KY Hwy 15, then along KY Hwy 15 to junction Interstate Hwy 64, then along Interstate Hwy 64 to junction Interstate Hwy 75, then along Interstate Hwy 75 to the KY-OH State Line; points in MI on and east of a line beginning at the IN-MI State Line, and extending along U.S. Hwy 27 to junction Interstate Hwy 75 then along Interstate Hwy 75 to its termination at Sault Ste. Marie, MI;

(21) Between points in Jefferson County, MO, on the one hand, and, on the other, points in PA and WV; points in IN on and east of a line beginning at the KY-IN State Line, and extending along IN Hwy 56 to junction U.S. Hwy 50, then along U.S. Hwy 50 to junction IN Hwy 1, then along IN Hwy 1 to junction IN Hwy 3, then along IN Hwy 3 to junction U.S. Hwy 20, then along U.S. Hwy 20 to junction IN Hwy 13, then along IN Hwy 13 to the IN-MI State Line; points in KY on and east of a line beginning at the KY-VA State Line, and extending along KY Hwy 160 to junction KY Hwy 7, then along KY Hwy 7 to junction KY Hwy 80, then along KY Hwy 80 to junction U.S. Hwy 460, then along U.S. Hwy 460 to junction KY Hwy 36, then along KY Hwy 36 to junction U.S. Hwy 27, then along U.S. Hwy 27 to junction KY Hwy 17, then along KY Hwy 17 to junction KY Hwy 14, then along KY Hwy 14 to the KY-IN State Line; points in MI on and east of a line beginning at the IN-MI State Line, and extending along U.S. Hwy 131 to junction MI Hwy 37, then along MI Hwy 37 to Traverse City, MI; and points in the Upper Peninsula of MI on and east of MI Hwy 77;

(22) Between points in Greene and Polk Counties, MO, on the one hand, and, on the other, points in PA and WV; points in IN on and east of a line beginning at the IN-OH State line, and extending along U.S. Hwy 50 to junction IN Hwy 101, then along IN Hwy 101 to junction U.S. Hwy 27, then along U.S. Hwy 27 to junction Interstate Hwy 69, then along Interstate Hwy 69 to the IN-MI State line; points in KY on and east of a line beginning at the TN-KY State line, and extending along U.S. Hwy 25E to junction Interstate Hwy 75, then along Interstate Hwy 75 to the KY-OH State line; points in MI on and east of a line beginning at the IN-MI State line, and extending along U.S. Hwy 27 to junction Interstate Hwy 75, then along Interstate Hwy 75 to its termination at Sault Ste. Marie, MI;

(23) Between points in St. Louis County, MO, on the one hand, and, on the other, points in PA and WV; points in IN on and east of a line beginning at the KY-IN State line, and extending along IN Hwy 56 to junction U.S. Hwy 50, then along U.S. Hwy 50 to junction IN Hwy 1, then along IN Hwy 1 to the junction IN Hwy 3, then along IN Hwy 3 to junction U.S. Hwy 20, then along U.S. Hwy 20 to junction IN Hwy 13, then along IN Hwy 13 to the IN-MI State line; points in KY on and east of a line beginning at the KY-VA State line, and extending along U.S. Hwy 421 to junction KY Hwy 80, then along KY Hwy 80 to junction KY Hwy 15, then along KY Hwy 15 to junction KY Hwy 11, then along KY Hwy 11 to junction KY Hwy 36, then along KY Hwy 36 to junction U.S. Hwy 27, then along U.S. Hwy 27 to junction KY Hwy 17, then along KY Hwy 17 to junction KY Hwy 14, then along KY Hwy 14 to the KY-IN State line; points in MI on and east of a line beginning at the IN-MI State line, and extending along U.S. Hwy 131 to junction MI Hwy 37, then along MI Hwy 37 to Traverse City, MI; and points in the Upper Peninsula of MI on and east of MI Hwy 77;

(24) Between points in Cedar and Dade Counties, MO, on the one hand, and, on the other, points in PA and WV; points in IN on and east of U.S. Hwy 27; points in KY on and east of a line beginning at the TN-KY State line, and extending along U.S. Hwy 25E to junction Interstate Hwy 75, then along Interstate Hwy 75 to the KY-OH State line; and points in MI on and east of Interstate Hwy 75;

(25) Between points in Barton and Vernon Counties, MO, on the one hand, and, on the other, points in PA and WV; points in IN on and east of a line beginning at the KY-IN State line, and extending along IN Hwy 250 to junction IN Hwy 129, then along IN Hwy 129 to junction U.S. Hwy 421, then along U.S. Hwy 421 to junction IN Hwy 9, then along IN Hwy 9 to junction IN Hwy 15, then along IN Hwy 15 to junction U.S. Hwy 6, then along U.S. Hwy 6 to junction U.S. Hwy 31, then along U.S. Hwy 31 to junction IN-MI State line; points in KY on and east of a line beginning at the TN-KY State line, and extending along Interstate Hwy 75 to junction U.S. Hwy 150, then along U.S. Hwy 150 to junction U.S. Hwy 127, then along U.S. Hwy 127 to the KY-IN State line at Warsaw, KY; points in MI on, north and east of a line beginning at the IN-MI State line, and extending along U.S. Hwy 31 to junction MI Hwy 140, then along MI Hwy 140 to junction U.S. Hwy 31, then along U.S. Hwy 31 to junction MI Hwy 46, then along MI Hwy 46 to its termination at Lake Michigan; and points in the Upper Peninsula of MI on and east of MI Hwy 77;

(26) Between points in Iron and Reynolds Counties, MO, on the one hand, and, on the other, points in PA and WV; points in IN on and east of a line beginning at the IN-OH State line, and extending along U.S. Hwy 50 to junction IN Hwy 3, then along IN Hwy 3 to junction Interstate Hwy 69, then along Interstate Hwy 69 to the IN-MI State line; points in KY on and east of a line beginning at the KY-VA State line, and extending along KY Hwy 7 to junction KY Hwy 15, then along KY Hwy 15 to junction Interstate Hwy 75, then along Interstate Hwy 75 to the KY-OH State line; points in MI on and east of a line beginning at the IN-MI State line, and extending along U.S. Hwy 27 to junction MI Hwy 115, then along MI Hwy 115 to junction U.S. Hwy 131, then along U.S. Hwy 131 to junction U.S. Hwy 31, then along U.S. Hwy 31 to junction Interstate Hwy 75, then along Interstate Hwy 75 to its termination at Sault Ste. Marie, MI;

(27) Between points in Dallas and Laclede Counties, MO, on the one hand, and, on the other, points in PA and WV; points in IN on and east of a line beginning at the IN-OH State line, and extending along U.S. Hwy 50 to junction IN Hwy 3, then along IN Hwy 3 to junction Interstate Hwy 69, then along Interstate Hwy 69 to the IN-MI State line; points in KY on and east of a line beginning at the TN-KY State line, and extending along U.S.

Hwy 25E to junction Interstate Hwy 75, then along Interstate Hwy 75 to the KY-OH State line; points in MI on and east of a line beginning at the IN-MI State line, and extending along U.S. Hwy 27 to junction Interstate Hwy 75, then along Interstate Hwy 75 to its termination at Sault Ste. Marie, MI;

(28) Between points in Dent and Shannon Counties, MO, on the one hand, and, on the other, points in PA and WV; points in IN on and east of a line beginning at the IN—OH State line, and extending along U.S. Hwy 50 to junction IN Hwy 101, then along IN Hwy 101 to junction U.S. Hwy 27, then along U.S. Hwy 27 to junction Interstate Hwy 69, then along Interstate Hwy 69 to the IN-MI State line; points in KY on and east of a line beginning at the KY-VA State line, and extending along KY Hwy 7 to junction KY Hwy 15, then along KY Hwy 15 to junction Interstate Hwy 75, then along Interstate Hwy 75 to the KY-OH State line; points in MI on and east of a line beginning at the IN-MI State line, and extending along U.S. Hwy 27 to junction MI Hwy 115, then along MI Hwy 115 to junction U.S. Hwy 131, then along U.S. Hwy 131 to junction U.S. Hwy 31, then along U.S. Hwy 31 to junction Interstate Hwy 75, then along Interstate Hwy 75 to its termination at Sault Ste. Marie, MI;

(29) Between points in Webster and Wright Counties, MO, on the one hand, and, on the other, points in PA and WV; points in IN on and east of a line beginning at the IN-OH State line, and extending along U.S. Hwy 35 to junction IN Hwy 15, then along IN Hwy 15 to the IN-MI State line; points in KY on and east of a line beginning at the KY-VA State line, and extending along KY Hwy 7 to junction KY Hwy 15, then along KY Hwy 15 to junction Interstate Hwy 75, then along Interstate Hwy 75 to the KY-OH State line; points in MI on and east of a line beginning at the IN-MI State line, and extending along U.S. Hwy 131 to junction U.S. Hwy 31, then along U.S. Hwy 31 to junction Interstate Hwy 75, then along Interstate Hwy 75 to its termination at Sault Ste. Marie, MI;

(30) Between points in Texas County, MO, on the one hand, and, on the other, points in PA and WV; points in IN on and east of a line beginning at the KY-IN State line, and extending along IN Hwy 262 to junction U.S. Hwy 50, then along U.S. Hwy 50 to junction U.S. Hwy 421, then along U.S. Hwy 421 to junction IN Hwy 9, then along IN Hwy 9 to junction U.S. Hwy 6, then along U.S. Hwy 6 to junction U.S. Hwy 31, then along U.S. Hwy 31 to the IN-MI State line; points in KY on and east of a line beginning at the KY-VA State line, and extending along U.S. Hwy 23 to junction U.S. Hwy 460, then along U.S. Hwy 460 to junction KY Hwy 36, then along KY Hwy 36 to junction U.S. Hwy 27, then along U.S. Hwy 27 to junction KY Hwy 17, then along KY Hwy 17 to junction KY Hwy 14, then along KY Hwy 14 to the KY-IN State line; points in MI on, north and east of a line beginning at the IN-MI State line, and extending along U.S. Hwy 31 to junction MI Hwy 140, then along MI Hwy 140 to junction U.S. Hwy 31, then along U.S. Hwy 31 to junction MI Hwy 46, then along MI Hwy 46 to its termination at Lake Michigan; points in the Upper Peninsula of MI on and east of MI Hwy 77;

(31) Between points in Madison and Wayne Counties, MO, on the one hand, and, on the other, points in PA and WV; points in IN on and east of a line beginning at the KY-IN State line, and extending along IN Hwy 262 to junction U.S. Hwy 50, then along U.S. Hwy 50 to junction U.S. Hwy 421, then along U.S. Hwy 421 to junction IN Hwy 3, then along IN Hwy 3 to junction U.S. Hwy 33, then along U.S. Hwy 33 to the IN-MI State line; points in KY on and east of a line beginning at the KY-VA State line, and extending along U.S. Hwy 23 to junction KY Hwy 201, then along KY Hwy 201 to junction KY Hwy 32, then along KY Hwy 32 to junction KY Hwy 11, then along KY Hwy 11 to junction KY Hwy 10, then along KY Hwy 10 to junction KY Hwy 22, then along KY Hwy 22 to junction KY Hwy 17, then along KY Hwy 17 to junction KY Hwy 14, then along KY Hwy to the KY-IN State line; points in MI on, north and east of a line beginning at the IN-MI State line, and extending along U.S. Hwy 31 to junction MI Hwy 140, then along MI Hwy 140 to junction U.S. Hwy 31, then along U.S. Hwy 31 to junction MI Hwy 46, then along MI Hwy 46 to its termination at Lake Michigan; points in the Upper Peninsula of MI on and east of MI Hwy 77;

(32) Between points in Jasper and Lawrence Counties, MO, on the one hand, and, on the other, points in PA and WV; points in IN on and east of U.S. Hwy 27; points in KY on and east of a line beginning at the TN-KY State line at Middlesboro, KY, and extending along U.S. Hwy 25E to junction Interstate Hwy 75, then along Interstate Hwy 75 to the KY-OH State line; points in MI on and east of a line beginning at the OH-MI State line, and extending along Interstate Hwy 75 to its termination at Sault Ste. Marie, MI;

(33) Between points in Bollinger, Cape Girardeau, Howell, and Oregon Counties, MO, on the one hand, and, on the other, points in PA and WV; points in IN on and east of a line beginning at the IN-OH State line, and extending along U.S. Hwy 50 to junction IN Hwy 3, then along IN Hwy 3 to junction Interstate Hwy 69, then along Interstate Hwy 69 to the IN-MI State line; points in KY on and east of a line beginning at the KY-VA State line, and extending along KY Hwy 7 to junction KY Hwy 15, then along KY Hwy 15 to junction Interstate Hwy 75, then along Interstate Hwy 75 to the KY-OH State line; points in MI on and east of a line beginning at the IN-MI State line, and extending along U.S. Hwy 27 to junction MI Hwy 115, then along MI Hwy 115 to junction U.S. Hwy 131, then along U.S. Hwy 131 to junction U.S. Hwy 31, then along U.S. Hwy 31 to junction Interstate Hwy 75, then along Interstate Hwy 75 to its termination at Sault Ste. Marie, MI;

(34) Between points in Butler and Stoddard Counties, MO, on the one hand, and, on the other, points in PA and WV; points in IN on and east of a line beginning at the KY-IN State line, and extending along IN Hwy 262 to junction IN Hwy 129, then along IN Hwy 129 to junction U.S. Hwy 421, then along U.S. Hwy 421 to junction IN Hwy 3, then along IN Hwy 3 to junction IN Hwy 5, then along IN Hwy 5 to junction U.S. Hwy 33, then along U.S. Hwy 33 to junction IN Hwy 19, then along IN Hwy 19 to the IN-MI State line; points in KY on and east of a line beginning at the KY-VA State line, and extending along U.S. Hwy 460 to junction KY Hwy 201, then along KY Hwy 201 to junction KY Hwy 1, then along KY Hwy 1 to junction KY Hwy 7, then along KY Hwy 7 to junction KY Hwy 24, then along KY Hwy 24 to junction KY Hwy 59, then along KY Hwy 59 to junction KY Hwy 10, then along KY Hwy 10 to junction KY Hwy 22, then along KY Hwy 22 to junction KY Hwy 17, then along KY Hwy 17 to junction KY Hwy 14, then along KY Hwy 14 to the KY-IN State line; points in MI on, east and north of a line beginning at the IN-MI State line, and extending along MI Hwy 62 to junction MI Hwy 51, then along MI Hwy 51 to junction Interstate Hwy 94, then along Interstate Hwy 94 to junction MI Hwy 40, then along MI Hwy 40 to junction U.S. Hwy 31, then along U.S. Hwy 31 to junction MI Hwy 46, then along MI Hwy 46 to its termination at Lake Michigan; and points in the Upper Peninsula of Michigan on and east of MI Hwy 77;

(35) Between points in Scott County, MO, on the one hand, and, on the other, points in PA and WV; points in IN on and east of U.S. Hwy 27; points in KY on and east of a line beginning at the KY-VA State line, and extending along KY Hwy 7 to junction KY Hwy 15, then along KY Hwy 15 to junction Interstate Hwy 75, then along Interstate Hwy 75 to the KY-

OH State line; points in MI on and east of a line beginning at the OH-MI State line, and extending along Interstate Hwy 75 to its termination at Sault Ste. Marie, MI;

(36) Between points in Dunklin and Pemiscot Counties, MO, on the one hand, and, on the other, points in PA; points in WV except those in Wayne, Lincoln, and Cabell Counties; points in IN on and east of a line beginning at the IN-OH State line, and extending along U.S. Hwy 50 to junction IN Hwy 101, then along IN Hwy 101 to junction U.S. Hwy 27, then along U.S. Hwy 27 to the IN-MI State line; points in KY on and east of a line beginning at the KY-WV State line, and extending along KY Hwy 40 to junction U.S. Hwy 460, then along U.S. Hwy 460 to junction Interstate Hwy 75, then along Interstate Hwy 75 to the KY-OH State line; points in MI on and east of a line beginning at the IN-MI State line, and extending along U.S. Hwy 27 to junction MI Hwy 115, then along MI Hwy 115 to junction U.S. Hwy 131, then along U.S. Hwy 131 to junction U.S. Hwy 31, then along U.S. Hwy 31 to junction Interstate Hwy 75, then along Interstate Hwy 75 to its termination at Sault Ste. Marie, MI; and

(37) Between points in MS and New Madrid Countries, MO, on the one hand, and, on the other, points in PA and WV; points in IN on and east of a line beginning at the KY-IN State line, and extending along IN Hwy 262 to junction IN Hwy 129, then along IN Hwy 129 to junction U.S. Hwy 421, then along U.S. Hwy 421 to junction IN Hwy 3, then along IN Hwy 3 to junction U.S. Hwy 6, then along U.S. Hwy 6 to junction IN Hwy 13, then along IN Hwy 13 to the IN-MI State line; points in KY on and east of a line beginning at the KY-VA State line, and extending along U.S. Hwy 460 to junction KY Hwy 201, then along KY Hwy 201 to junction KY Hwy 1, then along KY Hwy 1 to junction KY Hwy 7, then along KY Hwy 7 to junction KY Hwy 24, then along KY Hwy 24 to junction KY Hwy 59, then along KY Hwy 59 to junction KY Hwy 10, then along KY Hwy 10 to junction KY Hwy 22, then along KY Hwy 22 to junction KY Hwy 17, then along KY Hwy 17 to junction KY Hwy 14, then along KY Hwy 14 to the KY-IN State line; points in MI on and east of a line beginning at the IN-MI State line, and extending along U.S. Hwy 131 to junction Interstate Hwy 96, then along Interstate Hwy 96 to Muskegon, MI; and points in the Upper Peninsula of MI on and east of MI Hwy 77. (Gateway eliminated: Columbus, OH, and points within 80 miles of Columbus, OH.)

MC 117574 (Sub-E137), filed January 20, 1976. Applicant: DAILY EXPRESS, INC., P.O. Box 39, Carlisle, PA 17013. Representative: William A. Chesnutt, P.O. Box 1166, Harrisburg, PA 17108. (1) *Commodities*, the transportation of which because of their size or weight, require the use of special equipment, and *related iron and steel and iron and steel products*, the transportation of which is incidental to the transportation of commodities which by reason of size or weight require special equipment, and (2) *self-propelled articles* each weighing 15,000 pounds or more and related machinery, tools, parts, and supplies moving in connection therewith, restricted in (2) to the transportation of commodities on trailers, (A) between points in NY, PA, and WV, on the one hand, and, on the other, points in IL, IN, IA, MI, MN, MO, and WI, and points in KY on and west of a line beginning at the KY-OH State line extending along KY Hwy 2 to its junction with U.S. Hwy 60, then along U.S. Hwy 60 to junction U.S. Hwy 127, then along U.S. Hwy 127 to the TN-KY State line; (B) between points in NY and PA and points in WV on and north of U.S. Hwy 33, on the one hand, and, on the other, points in KY on and east of a line beginning at the KY-OH State line extending along KY Hwy 2 to junction U.S. Hwy 60, then along U.S. Hwy 60 to junction U.S. Hwy 127, then along U.S. Hwy 127 to the TN-KY State line; (C) between points in Cabell County, WV, on the one hand, and, on the other, points in IL, IN, IA, MI, MN, MO, and WI, and points in KY on and west of Interstate Hwy 75; (D) between points in Mercer County, WV, on the one hand, and, on the other, points in IL, IN, IA, MI, MN, MO, and WI, and points in KY on and west of a line beginning at the TN-KY State line extending along Interstate Hwy 65 to junction Interstate Hwy 71, then along Interstate Hwy 71 to junction KY Hwy 625, then along KY Hwy 625 to the KY-IN State line; (E) between points in Greenbrier County, WV, on the one hand, and, on the other, points in IL, IN, IA, MI, MN, MO, and WI, and points in KY on and west of a line beginning at the TN-KY State line extending along Interstate Hwy 75 to junction Interstate Hwy 64, then along Interstate Hwy 64 to junction U.S. Hwy 421, then along U.S. Hwy 421 to the KY-IN State line; (F) between points in Raleigh County, WV, on the one hand, and, on the other, points in IL, IN, IA, MI, MN, MO, and WI, and points in KY on and west of a line beginning at the TN-KY State line extending along U.S. Hwy 27 to junction U.S. Hwy 127, then along U.S. Hwy 127 to junction U.S. Hwy 421, then along U.S. Hwy 421 to the KY-IN State line; (G) between points in Mingo County, WV, on the one hand, and, on the other, points in IL, IN, IA, MI, MN, MO, and WI and points in KY on and west of a line beginning at the TN-KY State line extending along U.S. Hwy 79 to junction U.S. Hwy 431, then along U.S. Hwy 431 to junction U.S. Hwy 62, then along U.S. Hwy 62 to junction Interstate Hwy 65, then along Interstate Hwy 65 to junction Interstate Hwy 71, then along Interstate Hwy 71 to junction U.S. Hwy 421, then along U.S. Hwy 421 to the KY-IN State line; and (H) between points in Pocahontas County, WV, on the one hand, and, on the other, points in IL, IN, IA, MI, MN, MO, and WI, and points in KY on and west of a line beginning at the TN-KY State line extending along U.S. Hwy 27 to junction KY Hwy 80, then along KY Hwy 80 to junction KY Hwy 30, then along KY Hwy 30 to junction U.S. Hwy 460, then along U.S. Hwy 460 to junction U.S. Hwy 23, then along U.S. Hwy 23 to the KY-OH State line at Ashland, KY. (Gateway eliminated: Columbus, OH and points within 80 miles of Columbus.)

MC 117574 (Sub-E138), filed January 20, 1976. Applicant: DAILY EXPRESS, INC., P.O. Box 39, Carlisle, PA 17013. Representative: William A. Chesnutt, P.O. Box 1166, Harrisburg, PA 17108. Commodities, the transportation of which because of their size or weight, require the use of special equipment, and *related iron and steel and iron and steel products*, the transportation of which is incidental to the transportation of commodities which by reason of size or weight require special equipment, and (2) *self-propelled articles* each weighing 15,000 pounds or more and *related machinery, tools, parts and supplies* moving in connection therewith, restricted in (2) to the transportation of commodities on trailers;

(A) Between points in Rusk and Sawyer Counties, WI, on the one hand, and, on the other, points in PA and WV; points in IN on and east of a line beginning at the KY/IN State line extending along Interstate Hwy 65 to junction IN Hwy 9, then along IN Hwy 9 to junction Interstate Hwy 69, then along Interstate Hwy 69 to junction IN Hwy 37, then along IN Hwy 37 to the IN/OH State line; points in KY on and east of a line beginning at the TN/KY State line extending along US Hwy 31-E to junction Interstate Hwy 65, then along Interstate Hwy 65 to the KY-IN State line; and points in MI on and east of a line beginning at the OH-MI State line extending along US Hwy 23 to junction Interstate Hwy 94, then along Interstate Hwy 94 to Port Huron, MI.

(B) Between points in Marinette County, WI, on the one hand, and, on the other, points in PA and WV; points in IN on and east of a line beginning at the KY-IN State line ex-

tending along IN Hwy 3 to junction IN Hwy 67, then along IN Hwy 67 to the IN-OH State line; points in KY on and east of a line beginning at the TN-KY State line extending along Interstate Hwy 65 to junction US Hwy 31-W, then along US Hwy 31-W to junction Interstate Hwy 65, then along Interstate Hwy 65 to the KY-IN State line; and Detroit, MI.

(C) Between points in Barron, Burnett, Polk, and Washburn Counties, WI, on theone hand, and, on the other, points in PA and WV; points in IN on and east of a line beginning at the KY-IN State line extending along US Hwy 31 to junction IN Hwy 9, then along IN Hwy 9 to junction IN Hwy 32, then along IN Hwy 32 to junction IN Hwy 67, then along IN Hwy 67 to the IN-OH State line; points in KY on and east of US Hwy 31-W; and points in MI on and east of a line beginning at the OH-MI State line extending along US Hwy 23 to junction MI Hwy 59, then along MI Hwy 59 to junction MI Hwy 53, then along MI Hwy 53 to junction MI Hwy 46, then along MI Hwy 46 to Lake Huron.

(D) Between points in Langlade and Lincoln Counties, WI, on the one hand, and, on the other, points in PA and WV; points in IN on and east of a line beginning at the KY-IN State line extending along IN Hwy 3 to junction IN Hwy 67, then along IN Hwy 67 to the IN-OH State line; points in KY on and east of a line beginning at the TN-KY State line extending along Interstate Hwy 65 to junction US Hwy 31-W, then along US Hwy 31-W to junction Interstate Hwy 65, then along Interstate Hwy 65 to the KY-IN State line; and Detroit, MI.

(E) Between points in Price and Taylor Counties, WI, on the one hand, and, on the other, points in PA and WV; points in IN on and east of a line beginning at the KY-IN State line extending along IN Hwy 3 to junction IN Hwy 32, then along IN Hwy 32 to junction IN Hwy 67, then along IN Hwy 67 to the IN-OH State line; points in KY on and east of US Hwy 31-W; and points in MI on and east of a line beginning at the IN-MI State line extending along US Hwy 27 to junction MI Hwy 78, then along MI Hwy 78 to junction MI Hwy 21, then along MI Hwy 21 to junction MI Hwy 15, then along MI Hwy 15 to junction MI Hwy 46, then along MI Hwy 46 to Lake Huron.

(F) Between points in Oneida and Vilas Counties, WI, on the one hand, and, on the other, points in PA and WV; points in IN on and east of a line beginning at the KY-IN State line extending along Interstate Hwy 65 to junction IN Hwy 9, then along IN Hwy 9 to junction IN Hwy 8, then along IN Hwy 8 to the IN-OH State line; points in KY on and east of a line beginning at the TN-KY State line extending along US Hwy 31-E to junction Interstate Hwy 65, then along Interstate Hwy 65 to the KY-IN State line; and points in MI on and east of a line beginning at the OH-MI State line extending along US Hwy 23 to junction Interstate Hwy 94, then along Interstate Hwy 94 to junction US Hwy 24, then along US Hwy 24 to junction MI Hwy 59, then along MI Hwy 59 to junction Interstate Hwy 94, then along Interstate Hwy 94 to Port Huron, MI.

(G) Between points in Florence and Forest Counties, WI, on the one hand, and, on the other, points in PA and WV; points in IN on and east of a line beginning at the KY-IN State line extending along US Hwy 31 to junction IN Hwy 9, then along IN Hwy 9 to junction IN Hwy 32, then along IN Hwy 32 to junction IN Hwy 67, then along IN-OH State line; and points in KY on and east of U.S. Hwy 31-W.

(H) Between points in Dunn, Pierce, Pepin, and St. Croix Counties, WI, on the one hand, and, on the other, points in PA and WV; points in IN on and east of a line beginning at the KY-IN State line extending along Interstate Hwy 65 to junction IN Hwy 9, then along IN Hwy 9 to junction Interstate Hwy 69, then along Interstate Hwy 69 to junction IN Hwy 67, then along IN Hwy 67 to the IN-OH State line; points in KY on and east of Interstate Hwy 65; and points in MI on and east of a line beginning at the OH-MI State line extending along US Hwy 23 to junction Interstate Hwy 75, then along Interstate Hwy 75 to Bay City, MI.

(I) Between points in Menominee and Oconto Counties, WI, on the one hand, and, on the other, points in PA and WV; points in IN on and east of a line beginning at the KY-IN State line extending along IN Hwy 3 to junction IN Hwy 67, then along IN Hwy 67 to the IN-OH State line; points in KY on and east of US Hwy 31-E; and points in MI on and east of a line beginning at Detroit, MI, and extending along Interstate Hwy 75 to Bay City, MI.

(K) Between points in Buffalo and Trempealeau Counties, WI, on the one hand, and, on the other, points in PA and WV; points in IN on and east of a line beginning at the KY-IN State line extending along US Hwy 31 to junction IN Hwy 9, then along IN Hwy 9 to junction IN Hwy 32, then along IN Hwy 32 to junction IN Hwy 67, then along IN Hwy 67 to the IN-OH State line; points in KY on and east of US Hwy 31-E; and points in MI on and east of a line beginning at the IN-MI State line extending along US Hwy 27 to junction MI Hwy 20, then along MI Hwy 20 to junction MI Hwy 30, then along MI Hwy 30 to junction MI Hwy 61, then along MI Hwy 61 to Lake Huron.

(L) Between points in Clark and Jackson Counties, WI, on the one hand, and, on the other, points in PA and WV; points in IN on and east of a line beginning at the KY-IN State line extending along IN Hwy 7 to junction IN Hwy 3 then along IN Hwy 3 to junction IN Hwy 67, then along IN Hwy 67 to the IN-OH State line; points in KY on and east of a line beginning at the TN-KY State line extending along US Hwy 127 to junction US Hwy 421, then along US Hwy 421 to the KY-IN State line; and points in MI on and east of a line beginning at the OH-MI State line, and extending along US Hwy 23 to junction Interstate Hwy 94, then along Interstate Hwy 94 to junction MI Hwy 53, then along MI Hwy 53 to its termination at Lake Huron;

(M) Between points in Marathon County, WI, on the one hand, and, on the other, points in PA and WV; points in IN on and east of a line beginning at the KY-IN State line, and extending along US Hwy 31 to junction IN Hwy 9, then along IN Hwy 9 to junction IN Hwy 32, then along IN Hwy 32 to junction IN Hwy 67, then along IN Hwy 67 to the IN-OH State line; points in KY on and east of US Hwy 31E; and points in MI on and east of a line beginning at the OH-MI State line, and extending along US Hwy 23 to junction MI Hwy 14, then along MI Hwy 14 to junction US Hwy 24, then along US Hwy 24 to junction MI Hwy 90, then along MI Hwy 90 to its termination at Lake Huron;

(N) Between points in Portage and Wood Counties, WI, on the one hand, and, on the other, points in PA and WV; points in IN on and east of a line beginning at the KY-IN State line, and extending along IN Hwy 3 to junction IN Hwy 67, then along IN Hwy 67 to the IN-OH State line; points in KY on and east of a line beginning at the TN-KY State line, and extending along Interstate Hwy 65 to junction US Hwy 31W, then along US Hwy 31W to junction Interstate Hwy 65, then along Interstate Hwy 65 to the KY-IN State line; points in MI on and east of a line beginning at Detroit, MI, and extending along MI Hwy 53 to its termination at Lake Huron;

(O) Between points in Brown and Outagamie Counties, WI, on the one hand, and, on the other, points in PA and WV; points in IN on and east of a line beginning at the KY-IN State line, and extending along IN Hwy 7 to junction IN Hwy 3, then along IN Hwy 3 to junction IN Hwy 67, then along IN Hwy 67 to the IN-OH State line; points in KY on and east of a line beginning at the TN-KY State line, and extending along US Hwy 127 to junction US Hwy 421, then along US Hwy

421 to the KY-IN State line; points in MI on and east of a line beginning at the OH-MI State line, and extending along US Hwy 23 to junction US Hwy 12, then along US Hwy 12 to junction US Hwy 24, then along US Hwy 24 to junction MI Hwy 24, then along MI Hwy 24 to junction MI Hwy 21, then along MI Hwy 21 to junction MI Hwy 53, then along MI Hwy 53 to its termination at Lake Huron; KY-IN

(P) Between points in Shawano and Waupaca Counties, WI, on the one hand, and, on the other, points in PA and WV; points in IN on and east of a line beginning at the KY-IN State line, and extending along IN Hwy 3 to junction IN Hwy 67, then along IN Hwy 67 to the IN-OH State line; points in KY on and east of US Hwy 31W; and points in MI on and east of a line beginning at the OH-MI State line, and extending along US Hwy 23 to junction MI Hwy 14, then along MI Hwy 14 to junction US Hwy 24, then along US Hwy 24 to junction MI Hwy 24, then along MI Hwy 24 to junction MI Hwy 21, then along MI Hwy 21 to junction MI Hwy 53, then along MI Hwy 53 to its termination at Lake Huron.

(Q) Between points in Green and Rock Counties, WI, on the one hand, and, on the other, points in PA and WV; points in IN on and east of a line beginning at the KY-IN State line, and extending along US Hwy 421 to junction IN Hwy 3, then along IN Hwy 3 to junction IN Hwy 67, then along IN Hwy 67 to the IN-OH State line; points in KY on and east of a line beginning at the TN-KY State line, and extending along US Hwy 31E to junction Interstate Hwy 64, then along Interstate Hwy 64 to junction KY Hwy 55, then along KY Hwy 55 to the KY-IN State line; points in MI on and east of a line beginning at the OH-MI State line, and extending along Interstate Hwy 75 to junction Interstate Hwy 94, then along Interstate Hwy 94 to its termination at Port Huron, MI;

(R) Between points in Dane County, WI, on the one hand, and, on the other, points in PA and WV; points in IN on and east of a line beginning at the KY-IN State line, and extending along US Hwy 421 to junction IN Hwy 3, then along IN Hwy 3 to junction US Hwy 36, then along US Hwy 36 to the IN-OH State line; points in KY on and east of a line beginning at the TN-KY State line, and extending along US Hwy 31E to junction US Hwy 62, then along US Hwy 62 to junction US Hwy 127, then along US Hwy 127 to junction US Hwy 421, then along US Hwy 421 to the KY-IN State line; points in MI on and east of a line beginning at Detroit, MI, and extending along MI Hwy 53 to its termination at Lake Huron;

(S) Between points in Jefferson, Milwaukee, and Waukesha Counties, WI, on the one hand, and, on the other, points in PA and WV; points in IN on and east of a line beginning at the KY-IN State line, and extending along IN Hwy 129 to junction US Hwy 50, then along US Hwy 50 to junction IN Hwy 101, then along IN Hwy 101 to junction US Hwy 40, then along US Hwy 40 to the IN-OH State line; points in KY on and east of US Hwy 127; and points in MI on and east of a line beginning at the OH-MI State line, and extending along Interstate Hwy 75 to junction Interstate Hwy 94, then along Interstate Hwy 94 to its termination at Port Huron, MI;

(T) Between points in Kenosha, Racine, and Walworth Counties, WI, on the one hand, and, on the other, points in PA and WV; points in IN on and east of a line beginning at the KY-IN State line, and extending along IN Hwy 250 to the junction IN Hwy 129, then along IN Hwy 129 to junction US Hwy 421, then along US Hwy 421 to junction IN Hwy 3, then along IN Hwy 3 to junction US Hwy 36, then along US Hwy 36 to the IN-OH State line; points in KY on and east of a line beginning at the TN-KY State line, and extending along KY Hwy 163 to junction US Hwy 68, then along US Hwy 68 to junction US Hwy 127, then along US Hwy 127 to the KY-IN State line; points in MI on and east of a line beginning at Detroit, MI, and extending along US Hwy 25 to Port Huron, MI;

(U) Between points in Crawford, Richland, and Vernon Counties, WI, on the one hand, and, on the other, points in PA and WV; points in IN on and east of a line beginning at the KY-IN State line, and extending along IN Hwy 3 to junction IN Hwy 32, then along IN Hwy 32 to the IN-OH State line; points in KY on and east of US Hwy 31W; points in MI on and east of a line beginning at the OH-MI State line, and extending along US Hwy 23 to junction MI Hwy 14, then along MI Hwy 14 to junction US Hwy 24, then along US Hwy 24 to junction MI Hwy 24, then along MI Hwy 24 to junction MI Hwy 21, then along MI Hwy 21 to junction MI Hwy 53, then along MI Hwy 53 to its termination at Lake Huron;

(V) Between points in Green Lake, Marquette, and Waushara Counties, WI, on the one hand, and, on the other, points in PA and WV; points in IN on and east of a line beginning at the KY-IN State line, and extending along US Hwy 421 to junction IN Hwy 3, then along IN Hwy 3 to junction IN Hwy 32, then along IN Hwy 32 to the IN-OH State line; points in KY on and east of a line beginning at the TN-KY State line, and extending along US Hwy 31E to junction US Hwy 62, then along US Hwy 62 to junction KY Hwy 55, then along KY Hwy 55 to junction US Hwy 421, then along US Hwy 421 to the KY-IN State line; and points in MI on and east of a line beginning at the OH-MI State line, and extending along US Hwy 23 to junction MI Hwy 14, then along MI Hwy 14 to junction US Hwy 24, then along US Hwy 24 to junction MI Hwy 24, then along MI Hwy 24 to junction MI Hwy 21, then along MI Hwy 21 to junction MI Hwy 53, then along MI Hwy 53 to its termination at Lake Huron;

(W) Between points in Ashland and Iron Counties, WI, on the one hand, and, on the other, points in PA and WV; points in IN on and east of IN Hwy 37; points in KY on and east of a line beginning at the TN-KY State line, and extending along Interstate Hwy 65 to junction US Hwy 231, then along US Hwy 231 to junction KY Hwy 69, then along KY Hwy 69 to the KY-IN State line; points in MI on and east of a line beginning at the OH-MI State line, and extending along US Hwy 127 to junction US Hwy 12, then along US Hwy 12 to junction US Hwy 23, then along US Hwy 23 to junction Interstate Hwy 94, then along Interstate Hwy 94 to Detroit, MI;

(X) Between points in Bayfield and Douglas Counties, WI, on the one hand, and, on the other, points in PA and WV; points in IN on and east of a line beginning at the KY-IN State line, and extending along US Hwy 231 to junction IN Hwy 67, then along IN Hwy 67 to junction Interstate Hwy 69, then along Interstate Hwy 69 to the IN-MI State line; points in KY on and east of US Hwy 231; points in MI on and east of a line beginning at the IN-MI State line, and extending along Interstate Hwy 69 to junction Interstate Hwy 94, then along Interstate Hwy 94 to Detroit, MI;

(Y) Between points in Columbia and Dodge Counties, WI, on the one hand, and, on the other, points in PA and WV; points in IN on and east of a line beginning at the IN-OH State line, and extending along US Hwy 50 to junction IN Hwy 3, then along IN Hwy 3 to junction IN Hwy 67, then along IN Hwy 67 to junction IN Hwy 26, then along IN Hwy 26 to the IN-OH State line; points in KY on and east of a line beginning at the TN-KY State line, and extending along US Hwy 27 to junction Interstate Hwy 75, then along Interstate Hwy 75 to the KY-OH State line; points in MI on and east of a line beginning at the OH-MI State line, and extending along Interstate Hwy 75 to junction Interstate Hwy 94, then along Interstate Hwy 94 to its termination at Port Huron, MI;

(Z) Between points in Ozaukee and Washington Counties, WI, on the one hand, and, on the other, points in PA and WV; points in IN on and east of a

line beginning at the KY-IN State line, and extending along US Hwy 421 to junction IN Hwy 3, then along IN Hwy 3 to junction US Hwy 36, then along US Hwy 36 to the IN-OH State line; points in KY on and east of a line beginning at the TN-KY State line, and extending along US Hwy 31E to junction US Hwy 62, then along US Hwy 62 to junction KY Hwy 55, then along KY Hwy 55 to junction US Hwy 421, then along US Hwy 421 to the KY-IN State line; points in MI on and east of a line beginning at Detroit, MI, and extending along US Hwy 25 to Port Huron, MI;

(AA) Between points in Grant, Iowa and Lafayette Counties, WI, on the one hand, and, on the other, points in PA and WV; points in IN on and east of a line beginning at the KY-IN State line, and extending along IN Hwy 3 to junction IN Hwy 67, then along IN Hwy 67 to the IN-OH State line; points in KY on and east of a line beginning at the TN-KY State line, and extending along Interstate Hwy 65 to junction US Hwy 31W, then along US Hwy 31W to junction Interstate Hwy 65, then along Interstate Hwy 65 to the KY-IN State line; and points in MI on and east of a line beginning at Detroit, MI, and extending along Interstate Hwy 94 to its termination at Port Huron, MI;

(BB) Between points in Fond du Lac and Winnebago Counties, WI, on the one hand, and, on the other, points in PA and WV; points in IN on and east of a line beginning at the KY-IN State line, and extending along US Hwy 421 to junction IN Hwy 3, then along IN Hwy 3 to junction IN Hwy 32, then along IN Hwy 32 to the IN-OH State line; points in KY on and east of a line beginning at the TN-KY State line, and extending along US Hwy 31E to junction US Hwy 62, then along US Hwy 62 to junction KY Hwy 55, then along KY Hwy 55 to junction US Hwy 421, then along US Hwy 421 to the KY-IN State line; and points in MI on and east of a line beginning at Detroit, MI, and extending along US Hwy 25 to junction MI Hwy 53, then along MI Hwy 53 to its termination at Lake Huron;

(CC) Between points in Calumet, Manitowoc, and Sheboygan Counties, WI, on the one hand, and, on the other, points in PA and WV; points in IN on and east of a line beginning at the IN-OH State line, and extending along US Hwy 50 to junction IN Hwy 3, then along IN Hwy 3 to junction IN Hwy 67, then along IN Hwy 67 to the IN-OH State line; points in KY on and east of a line beginning at the TN-KY State line, and extending along US Hwy 127 to junction US Hwy 421, then along US Hwy 421 to the KY-IN State line; and points in MI on and east of a line beginning at the OH-MI State line, and extending along Interstate Hwy 75 to junction Interstate Hwy 94, then along Interstate Hwy 94 to its termination at Port Huron, MI;

(DD) Between points in Adams, Juneau, and Sauk Counties, WI, on the one hand, and, on the other, points in PA and WV; points in IN on and east of a line beginning at the KY-IN State line, and extending along IN Hwy 7 to junction IN Hwy 3, then along IN Hwy 3 to junction IN Hwy 67, then along IN Hwy 67 to the IN-OH State line; points in KY on and east of a line beginning at the TN-KY State line, and extending along US Hwy 127 to junction US Hwy 421, then along US Hwy 421 to the KY-IN State line; and points in MI on and east of a line beginning at the OH-MI State line, and extending along Interstate Hwy 75 to junction Interstate Hwy 94, then along Interstate Hwy 94 to its termination at Port Huron, MI; and

(EE) Between points in La Crosse and Monroe Counties, WI, on the one hand, and, on the other, points in PA and WV; points in IN on and east of a line beginning at the KY-IN State line, and extending along IN Hwy 3 to junction IN Hwy 67, then along IN Hwy 67 to the IN-OH State line; points in KY on and east of a line beginning at the TN-KY State line, and extending along Interstate Hwy 65 to junction US Hwy 31W, then along US Hwy 31W to junction Interstate Hwy 65, then along Interstate Hwy 65 to the KY-IN State line; and points in MI on and east of a line beginning at Detroit, MI, and extending along MI Hwy 53 to its termination at Lake Huron. (Gateway eliminated: Columbus, OH, and points within 80 miles of Columbus, OH.)

MC 117574 (Sub-E152), filed January 19, 1976. Applicant: DAILY EXPRESS, INC., P.O. Box 39, Carlisle, PA 17013. Representative: E. S. Moore, Jr. (same as above). (1) *Commodities*, the transportation of which because of size or weight, require the use of special equipment, and *related materials, supplies, and parts* of such commodities when their transportation is incidental thereto, and (2) *self-propelled articles* each weighing 15,000 pounds or more, and *related machinery, tools, parts, and supplies* moving in connection therewith, restricted to self-propelled articles transported on trailers: (1) Between points in the KY counties of Anderson and Franklin, on the one hand, and, on the other, points in MI and PA, those points in IN on, north and east of a line beginning at the IL-IN State line, and extending along U.S. Hwy 24 to junction U.S. Hwy 35, then along U.S. Hwy 35 to junction IN Hwy 9, then along IN Hwy 9 to junction IN Hwy 38, then along IN Hwy 38 to junction IN Hwy 3, then along IN Hwy 3 to junction IN Hwy 44, then along IN Hwy 44 to the IN-OH State line, points in the city of Ashland, KY, and those points in WV on and east of a line beginning at the WV-VA State line, and extending along WV Hwy 83 to junction WV Hwy 80, then along WV Hwy 80 to junction U.S. Hwy 52, then along U.S. Hwy 52 to junction U.S. Hwy 119, then along U.S. Hwy 119 to junction WV Hwy 10, then along WV Hwy 10 to junction U.S. Hwy 60, then along U.S. Hwy 60 to the KY-WV State line; (2) between points in Casey and Lincoln Counties in KY, on the one hand, and, on the other, points in MI and PA, those points in IN on and north of a line beginning at the OH-IN State line, and extending along U.S. Hwy 35 to junction IN Hwy 38, then along IN Hwy 38 to junction IN Hwy 32, then along IN Hwy 32 to the IN-IL State line, and those points in WV on and east of a line beginning at the VA-WV State line, and extending along U.S. Hwy 52 to junction U.S. Hwy 119, then along U.S. Hwy 119 to junction WV Hwy 10, then along WV Hwy 10 to the WV-OH State line; (3) between points in KY counties of Scott and Woodford, on the one hand, and, on the other, points in MI and PA, those points in IN on and north of U.S. Hwy 40; points in the city of Ashland, KY, and those points in WV on and east of a line beginning at the WV-VA State line, and extending along WV Hwy 80 to junction U.S. Hwy 52, then along U.S. Hwy 52 to junction U.S. Hwy 119, then along U.S. Hwy 119 to junction WV Hwy 10, then along WV Hwy 10 to junction U.S. Hwy 60, then along U.S. Hwy 60 to the KY-WV State line; (4) between points in Grant and Owen Counties, KY, on the one hand, and, on the other, points in MI and PA, those points in IN on and north of a line beginning at the OH-IN State line, and extending along U.S. Hwy 35 to junction IN Hwy 15, then along IN Hwy 15 to junction IN Hwy 18, then along IN Hwy 18 to junction U.S. Hwy 31, then along U.S. Hwy 31 to junction IN Hwy 16, then along IN Hwy 15 to junction U.S. Hwy 41, then along U.S. Hwy 41 to the IN-IL State line; (5) between points in the KY counties of Boone and Kenton, on the one hand, and, on the other, points in MI, PA, and WV and those points in IN on and north of U.S. Hwy 40, and those points in KY on and east of U.S. Hwy 23. (Gateway eliminated: Columbus, OH, and points within 80 miles thereof.)

MC 117574 (Sub-E153), filed January 19, 1976. Applicant: DAILY EXPRESS, INC., P.O. Box 39, Carlisle, PA 17013. Representative: E. S. Moore, Jr. (same as above). (1) *Commodities*, the transportation of which because of size or weight, require the use of special equipment, and *related materials, supplies, and parts* of such commod-

ities when their transportation is incidental thereto, and (2) *self-propelled articles* each weighing 15,000 pounds or more, and *related machinery, tools, parts, and supplies* moving in connection therewith, restricted to self-propelled articles transported on trailers: (1) Between points in Fayette, Garrard, Jessamine, and Madison Counties, KY, on the one hand, and, on the other, points in MI and PA, those points in IN on and north of a line beginning at the OH-IN State line, and extending along Interstate Hwy 70, then along Interstate Hwy 70 to junction U.S. Hwy 36, then along U.S. Hwy 36 to the IN-IL State line, and those points in WV on and east of a line beginning at the WV-VA State line, and extending along U.S. Hwy 19 to junction WV Hwy 10, then along WV Hwy 10 to the WV-OH State line; (2) between points in Bourbon, Clark, and Nicholas Counties, KY, on the one hand, and, on the other, points in MI and PA, those points in IN on and north of U.S. Hwy 40, those points in WV on and east of a line beginning at the VA-WV State line extending along U.S. Hwy 52 to junction U.S. Hwy 119, then along U.S. Hwy 119 to junction WV Hwy 10, then along WV Hwy 10 to the WV-OH State line; (3) between points in Harrison and Pendleton Counties, KY, on the one hand, and, on the other, points in MI, PA, WV, those points in IN on and north of U.S. Hwy 40, and those points in KY on and east of U.S. Hwy 23; (4) between points in Campbell County, KY, on the one hand, and, on the other, points in MI, PA, WV, those points in IN on and north of U.S. Hwy 40, and those points in KY on and east of U.S. Hwy 23; (5) between points in Bell, Knox, and Whitley Counties, KY, on the one hand, and, on the other, points in MI, PA, those points in IN on and north of U.S. Hwy 40, points in WV on and north of a line beginning at the VA-WV State line extending along U.S. Hwy 33 to junction U.S. Hwy 33-119, then along U.S. Hwy 33-119 to junction U.S. Hwy 119, then along U.S. Hwy 119 to junction Interstate Hwy 64, then along Interstate Hwy 64 to the WV-OH State line. (Gateway eliminated: Columbus, OH, and points within 80 miles thereof.)

By the Commission.

H. G. HOMME, Jr.,
Acting Secretary.

[FR Doc. 78-25546 Filed 9-8-78; 8:45 am]

[7035-01]

[Notice No. 104]

MOTOR CARRIER BOARD TRANSFER PROCEEDINGS

The following publications include motor carrier, water carrier, broker, and freight forwarder transfer applications filed under sections 212(b), 206(a), 211, 312(b), and 410(g) of the Interstate Commerce Act.

Each application (except as otherwise specifically noted) contains a statement by applicants that there will be no significant effect on the quality of the human environment resulting from approval of the application.

Protests against approval of the application, which may include a request for oral hearing, must be filed with the Commission on or before October 11, 1978. Failure seasonably to file a protest will be construed as a waiver of opposition and participation in the proceeding. A protest must be served upon applicants' representative(s), or applicants (if no such representative is named), and the protestant must certify that such service has been made.

Unless otherwise specified, the signed original and six copies of the protest shall be filed with the Commission. All protests must specify with particularly the factual basis, and the section of the Act, or the applicable rule governing the proposed transfer which protestant believes would preclude approval of the application. If the protest contains a request for oral hearing, the request shall be supported by an explanation as to why the evidence sought to be presented cannot reasonably be submitted through the use of affidavits.

The operating rights set forth below are in synopses form, but are deemed sufficient to place interested persons on notice of the proposed transfer.

MC-FC-77732, filed June 28, 1978. Transferee: INTER-COASTAL, INC., 131 Beaverbrook Road, Lincoln Park, NJ 07035. Transferor: MIDCOAST TRUCKING, a corporation, 131 Beaverbrook Road, Lincoln Park, NJ 97035. Representative: Alan Kahn, Esq., Suite 1920, Two Penn Center Plaza, Philadelphia, PA 19102. Authority sought for purchase by transferee of the operating rights of transferor as set forth in permits Nos. MC 139078 and 139078 (Sub-8) issued March 10, 1975, and September 2, 1976, respectively, as follows: Empty containers from the facilities of Hedwin Corp. at Baltimore, MD, and Old Bridge, NJ, to points in CT, DE, NJ, NY, VA, and WV, points in that part of PA on and east of U.S. Hwy 15, and DC; materials and supplies used in the manufacture of containers from points in the above-specified destination territory to the facilities of Hedwin Corp. at Baltimore, MD; empty containers from the facilities of Hedwin Corp. at Baltimore, MD, to points in AL, AR, FL, GA, IL, IN, KY, LA, MI, MA, MS, MO, OH, NC, PA, RI, SC, TN, and TX; and from the facilities of Hedwin Corp. at LaPorte, IN, to points in IL, IA, KY, LA, MD, MI, MN, MO, NE, NJ, NY, NC, OH, TN, TX, WI, and PA. Transferee presently holds no authority from this Commission. Application has not been filed for temporary authority under section 210a(b).

MC-FC-77744, filed July 5, 1978. Transferee: O.K. TRUCKING CO., a corporation, 1765 Lincoln Road, Yuba City, CA 95991. Transferor: Baldwin Trucking, Inc., 192 98th Avenue, Oakland, CA 94603. Representative: Michael C. Leiden, Practitioner, P.O. Box 8594, Emeryville, CA 94662. Authority sought for purchase by transferee of the operating rights of transferor set forth in Certificate of Registration No. MC 135779 (Sub-1), issued February 25, 1975, as follows: General commodities, subject to certain restrictions, between points in a specified San Francisco territory. Transferee presently holds no authority from this Commission. Application has not been filed for temporary authority under section 210a(b).

MC-FC-77754, July 11, 1978. Transferee: GRADLYN KENNELS, INC., Sykesville Road, Wrightstown, NJ 08562. Transferor: Gradlyn Kennels Corp. of New Jersey, Sykesville Road, Wrightstown, NJ 08562. Representative: Lawrence A. Eleuteri, Sr., Attorney at Law, Route 537 (Garden Street) at Ashurst Lane, Mount Holly, NJ 08060. Authority sought for purchase by transferee of the operating rights of transfer as set forth in Certificate No. MC 133459, issued March 23, 1970, as follows: Animals other than horses, between Burlington County, NJ, on the one hand, and, on the other, points in PA and NY. Transferee presently holds no authority from this Commission. Application has not been filed for temporary authority under section 210a(b).

MC-FC-77763, filed July 12, 1978. Transferee: INTERMARKET TRANSPORTATION SYSTEMS, INC., 4819 Cecelia, Cudahy, CA 90201. Transferor: Burton Trucking & Transfer Co., a corporation, 11910 Greenstown Avenue, Santa Fe Springs, CA 90670. Representative: Milton W. Flack, Attorney at Law, 4311 Wilshire Boulevard, Los Angeles, CA 90010. Authority sought for purchase by transferee of the operating rights of transferor set forth in Certificate of Registration MC 3853 (Sub-5), issued July 23, 1976, evidencing a right to engage in transportation in interstate commerce as described in Certificate No. 53637, dated August 28, 1956, as amended in Decision No. 54113, dated November 19, 1956, and transferred by Decision No. 85200 dated December 2, 1975, issued by the Public Utilities Commission of California. Transferee presently holds no authority from this Commission. Application has not been filed

for temporary authority under section 210a(b).

MC-FC-77770, filed July 19, 1978. Transferee: WILLIAMSON DELIVERY SERVICES, INC., Box 22032 AMF, Tampa, FL 33622. Transferor: Income Benefits, Inc., d.b.a. Duval Transportation Co., 5753 South Tampa Avenue, Orlando, FL 32809 Representative: Gerald K. Gimmel, Attorney at Law, Suite 145, 4 Professional Drive, Gaithersburg, MD 20760. Authority sought for purchase by transferee of the operating rights of transferor as set forth in Certificate MC 139982, issued May 19, 1975, as follows: General commodities, subject to certain restrictions, between points in Alachua, Hernando, Hillsborough, Lake, Marion, Orange, Osceola, Pasco, Polk, Seminole, and Sumter Counties, FL, restricted to the transportation of traffic having an immediately prior or subsequent movement by air. Transferee presently holds no authority from this Commission. Application has been filed for temporary authority under section 210a(b).

MC-FC-77781, filed July 26, 1978. Transferee: WALLACK FREIGHT LINES, INC., 65 Court Street, Copiague, NY 11726. Transferor: H. & S. Express, Inc., 65 Court Street, Copiague, NY 11726. Representative: Robert B. Pepper, Registered Practitioner, 168 Woodbridge Avenue, Highland Park, NJ 08904. Authority sought for purchase by transferee of the operating rights of transferor as set forth in Certificate MC 22507, issued January 9, 1974, as follows: General commodities, subject to certain restrictions, between New York, NY on the one hand, and, on the other, points in Westchester County, NY, and those in that part of CT within 25 miles of Columbus Circle, New York, NY. Transferee presently holds authority from this Commission. Application has not been filed for temporary authority under section 210a(b).

MC-FC-77798, filed August 2, 1978. Transferee: ALL INTERNATIONAL DELIVERY, INC., Rural Route 4, Box 303F, Swanton, OH 43558. Transferor: Special Service Delivery, Inc., 3950 Detroit Avenue, Toledo, OH 43612. Representative: Michael M. Briley, Attorney at Law, 300 Madison Avenue, P.O. Box 2088, Toledo, OH 43603. Authority sought for purchase by transferee of operating rights of transferor as set forth in Certificate of Registration MC 120906 (Sub. 6), issued October 16, 1974, as follows: General commodities, with certain exceptions, between Toledo Municipal Airport and the Toledo Express Airport, both located at or near Toledo, OH on the one hand, and, on the other, points in OH, restricted to the transportation of shipments having an immediately prior or subsequent movement by air. Transferee presently holds no authority from this Commission. Application has not been filed for temporary authority under section 210a(b).

MC-FC-77807, filed August 8, 1978. Transferee: STAGECOACH WEST, INC., P.O. Box 264, Rapid City, SD 57709. Transferor: Denver-Colorado Springs-Pueblo Motorway, Inc., d.b.a. Continental Trailways, 2450 Curtis Street, Denver, CO 80205. Representative: James W. Olson, Attorney at Law, P.O. Box 1552, Rapid City, SD 57709. Authority sought for purchase by transferee of that portion of the operating rights of transferor as set forth in Certificate MC 28462 (Sub 8), issued December 29, 1961, as follows: Passengers and their baggage, and express and newspapers in the same vehicle with passengers, over regular routes, between Deadwood, SD, and Belle Fourche, SD, serving all intermediate points. Transferee presently holds no authority from this Commission. Application has not been filed for temporary authority under section 210a(b).

H. G. Homme, Jr.,
Acting Secretary.

[FR Doc. 78-25545 Filed 9-8-78; 8:45 am]

[7035-01]

[Amendment No. 4 to ICC Order No. 6 under Revised Service Order No. 1252]

REROUTING TRAFFIC

September 6, 1978.

To: The Baltimore and Ohio Railroad Co.

Upon further consideration of ICC Order No. 6 (The Baltimore and Ohio Railroad Co), and good cause appearing therefor: it is ordered,

ICC Order No. 6 is amended by substituting the following paragraph (g) for paragraph (g) thereof:

(g) *Expiration date.* This order shall expire at 11:59 p.m., November 15, 1978, unless otherwise modified, changed or suspended.

Effective date. This amendment shall become effective at 11:59 p.m., August 31, 1978.

This amendment shall be served upon the Association of American Railroads, Car Service Division, as agent of all railroads subscribing to the car service and car hire agreement under the terms of that agreement, and upon the American Short Line Railroad Association. A copy of the amendment shall be filed with the Director, Office of the Federal Register.

Issued at Washington, D.C., August 25, 1978.

Interstate Commerce Commission
Joel E. Burns,
Agent.

[FR Doc. 78-25537 Filed 9-8-78; 8:45 am]

[7035-01]

[Amendment No. 1 to ICC Order No. 59 Under Revised Service Order No. 1252]

REROUTING TRAFFIC

September 6, 1978.

To all railroads:

Upon further consideration of ICC Order No. 59 (Southern Pacific Transportation Co.) and good cause appearing therefor: *It is ordered,*

ICC Order No. 59 is amended by substituting the following paragraph (g) for paragraph (g) thereof:

(g) *Expiration date.* This order shall expire at 11:59 p.m., December 31, 1978, unless otherwise modified, changed or suspended.

Effective date. This amendment shall become effective at 11:59 p.m., August 31, 1978.

This amendment shall be served upon the Association of American Railroads, Car Service Division, as agent of all railroads subscribing to the car service and car hire agreement under the terms of that agreement, and upon the American Short Line Railroad Association. A copy of the amendment shall be filed with the Director, Office of the Federal Register.

Issued at Washington, D.C., August 25, 1978.

Interstate Commerce Commission
Joel E. Burns,
Agent.

[FR Doc. 78-25541 Filed 9-8-78; 8:45 am]

[7035-01]

[Amendment No. 3 to Revised ICC Order No. 65 under Revised Service Order No. 1252]

REROUTING TRAFFIC

September 6, 1978.

To all railroads:

Upon further consideration of Revised ICC Order No. 65 (CP Rail and Detroit, Toledo, and Ironton Railroad Co.), and good cause appearing therefore: *It is ordered,*

Revised ICC Order No. 65 is amended by substituting the following paragraph (g) for paragraph (g) thereof:

(g) *Expiration date.* This order shall expire at 11:59 p.m., September 15, 1978, unless otherwise modified, changed, or suspended.

Effective date. This amendment shall become effective at 11:59 p.m., August 31, 1978.

This amendment shall be served upon the Association of American Railroads, Car Service Division, as agent of all railroads subscribing to the car service and car hire agreement under the terms of that agreement, and upon the American Short Line Railroad Association. A copy of the amendment shall be filed with the Director, Office of the Federal Register.

Issued at Washington, D.C., August 29, 1978.

INTERSTATE COMMERCE COMMISSION,
JOEL E. BURNS,
Agent.

[FR Doc. 78-25543 Filed 9-8-78; 8:45 am]

[7035-01]

[Amendment No. 3 to ICC Order No. 62 under Revised Service Order No. 1252]

REROUTING TRAFFIC

To all railroads:

Upon further consideration of ICC Order No. 62 (The Chesapeake & Ohio Railway Co.) and good cause appearing therefor: *It is ordered,*

ICC Order No. 62 is amended by substituting the following paragraph (g) for paragraph (g) thereof:

(g) *Expiration date.* This order shall expire at 11:59 p.m., September 15, 1978, unless otherwise modified, changed, or suspended.

Effective date. This amendment shall become effective at 11:59 p.m., August 31, 1978.

This amendment shall be served upon the Association of American railroads, Car Service Division, as agent of all railroads subscribing to the car service and car hire agreement under the terms of that agreement, and upon the American Short Line Railroad Association. A copy of this amendment shall be filed with the Director, Office of the Federal Register.

Issued at Washington, D.C., August 29, 1978.

INTERSTATE COMMERCE COMMISSION,
JOEL E. BURNS,
Agent.

[FR Doc. 78-25544 Filed 9-8-78; 8:45 am]

sunshine act meetings

This section of the FEDERAL REGISTER contains notices of meetings published under the "Government in the Sunshine Act" (Pub. L. 94-409), 5 U.S.C. 552b(e)(3).

CONTENTS

	Items
Commodity Futures Trading Commission	1-3
Equal Employment Opportunity Commission	4
Federal Energy Regulatory Commission	5, 6
Federal Reserve System	7
National Council on Educational Research	8
Railroad Retirement Board	10
Renegotiation Board	10
Securities and Exchange Commission	11, 12

[6351-01]

1

COMMODITY FUTURES TRADING COMMISSION.

TIME AND DATE: 10 a.m., September 14, 1978, 8th floor conference room.

PLACE: 2033 K Street NW., Washington, D.C.

STATUS: Closed.

MATTERS TO BE CONSIDERED: Judicial session.

CONTACT PERSON FOR MORE INFORMATION:

Jane Stuckey, 254-6314.

[S-1815-78 Filed 9-7-78; 11:48 am]

[6351-01]

2

COMMODITY FUTURES TRADING COMMISSION.

TIME AND DATE: 2 p.m., September 11, 1978.

PLACE: 2033 K Street NW., Washington, D.C.

STATUS: Open.

MATTERS TO BE CONSIDERED:

Designation of MidAmerica Commodity Exchange as a contract market to trade a 20,000 pound live beef cattle (slaughter) contract.

Designation of the Chicago Board of Trade as a contract market for futures trading in 30-day commercial paper loans.

Section 5a(12) approval of regulation 001-015 which establish a GNMA futures contract with certificate delivery, on the Chicago Board of Trade.

CONTACT PERSON FOR MORE INFORMATION:

Jane Stuckey, 254-6314.

[S-1816-78 Filed 9-7-78; 11:48 am]

[6351-01]

3

COMMODITY FUTURES TRADING COMMISSION.

TIME AND DATE: Approximately 4:30 p.m., September 11, 1978.

PLACE: 2033 K Street NW., Washington, D.C.

STATUS: Closed.

MATTERS TO BE CONSIDERED: Application for registration as an associated person of a futures commission merchant.

CONTACT PERSON FOR MORE INFORMATION:

Jane Stuckey, 254-6314.

[S-1817-78 Filed 9-7-78; 11:48 am]

[6570-06]

4

EQUAL EMPLOYMENT OPPORTUNITY COMMISSION.

TIME AND DATE: 9:30 a.m., (eastern time), Wednesday, September 13, 1978.

PLACE: Chairman's Conference Room, No. 5240, on the fifth floor of the Columbia Plaza Office Building, 2401 E Street NW., Washington, D.C. 20506.

STATUS: Open to the public.

MATTERS TO BE CONSIDERED:

1. Freedom of Information Act Appeal No. 78-6-FOIA-118, concerning a request by an employer charged with discrimination for access to investigative files.
2. Freedom of Information Act Appeal No. 78-7-FOIA-150, concerning a request by a party who filed a charge of discrimination for access to the file on that charge after his right to bring a Title VII action expired.
3. Proposed fiscal year 1979 Private Bar Program.
4. Report on Commission Operations by the Executive Director.

NOTE.—Any matter not discussed or concluded may be carried over to a later meeting.

CONTACT PERSON FOR MORE INFORMATION:

Marie D. Wilson, Executive Officer, Executive Secretariat, at 202-634-6748.

This notice issued September 6, 1978.

[S-1823-78 Filed 9-7-78; 3:35 pm]

[6740-02]

5

SEPTEMBER 6, 1978.

FEDERAL ENERGY REGULATORY COMMISSION.

TIME AND DATE: 10 a.m., September 13, 1978.

STATUS: Open.

MATTERS TO BE CONSIDERED: Agenda.

NOTE.—Items listed on the agenda may be deleted without further notice.

CONTACT PERSON FOR MORE INFORMATION:

Kenneth F. Plumb, Secretary, telephone 202-275-4166.

This is a list of matters to be considered by the Commission. It does not include a listing of all papers relevant to the items on the agenda. However, all public documents may be examined in the office of Public Information.

POWER AGENDA—161ST MEETING, SEPTEMBER 13, 1978, REGULAR MEETING (10 A.M.)

CAP-1. Docket No. ER78-523, Lake Superior District Power Co.
CAP-2. Docket No. ER78-521, Indianapolis Power & Light Co.
CAP-3. Docket No. ER78-524, Michigan Power Co.
CAP-4. Docket No. E-9555, The Metropolitan Water District of Southern California.

I. ELECTRIC RATE MATTERS

ER-1. Docket No. ER78-536, Duke Power Co.
ER-2. Docket No. ER78-32, New York Electric & Gas Co.
ER-3. Docket No. ER78-559, Consolidated Edison Co. of New York.
ER-4. Docket No. ER78-467, Iowa Power & Light Co.
ER-5. Docket Nos. ER78-19 (Phase I) and ER76-83, Florida Power & Light Co.
ER-6. Docket No. E-9574, Florida Power & Light Co.
ER-7. Docket No. ER76-5, Indiana & Michigan Power Co.
ER-8. Docket Nos. ER78-70 and ER78-71, Pennsylvania Power & Light Co.
ER-9. Docket Nos. ER77-465 and ER78-423, Oklahoma Gas & Electric Co.

II. LICENSED PROJECT MATTERS

P-1. Project No. 2170, Chugach Electric Association, Inc.
P-2. Project No. 2781, Pacific Gas & Electric Co.
P-3. Report on Federal Energy Regulatory Commission Activities Under Section 24 of the Federal Power Act.

MISCELLANOUS AGENDA—161ST MEETING, SEPTEMBER 13, 1978, REGULAR MEETING

CAM-1. Review of Proposed Standby Production Allocation and Price Regulations and Imposed Allocation Fractions Submitted by the Secretary of Energy.
CAM-2. Secretary of Energy's Proposed Rule To Amend 10 CFR 430.32, Energy Conservation Program for Appliances.
CAM-3. Secretary of Energy's Proposed Rulemaking: Federal Loan Guarantees for Development of Underground Coal Mines.
CAM-4. Secretary of Energy's Proposed Regulations Regarding Uranium Enrichment Services: Separative Work Charges, Base Charges for Natural Uranium and Modification of Cost Components.
CAM-5. Pennsylvania Power & Light Co.
M-1. Docket No. R-406, Purchased Gas Cost Adjustment Provision in Natural Gas Pipeline Companies' FPC Gas Tariffs.
M-2. Docket No. RM- , Treatment of Refunds Under Purchased Gas Adjustment Clauses.
M-3. Informational Budget Briefing to the Commission.

GAS AGENDA—161ST MEETING, SEPTEMBER 13, 1978, REGULAR MEETING

CAG-1. Docket No. RP72-136 (PGA No. 78-4). Florida Gas Transmission Co.
CAG-2. Docket Nos. CI78-767, CI77-702, CI78-499, CI78-501, Pennzoil Louisiana & Texas Offshore, Inc.
CAG-3. Docket No. CI78-940, American Natural Gas Production Co.
CAG-4. Docket No. CI78-955, Tenneco Oil Co. Docket No. CS76-842, Devon Corp. Docket Nos. CS76-842, et al., Devon Corp., et al. Docket Nos. CS69-4, et al., Hytech Energy Corp. (formerly Western States producing Co., et al.). Docket No. CI78-322, Union Texas Petroleum, a division of Allied Chemical Corp. Docket No. CI77-339, Tenneco Oil Co. Docket No. CI78-987, Kerr-McGee Corp. Docket No. CI78-519, Gulf Oil Corp. Docket No. CI77-781, Continental Oil Co. Docket No. CI78-869, American Natural Gas Production Co. Docket No. CI78-781, American Petrofina Co. of Texas.Docket No. CI78-966, Amerada Hess Corp. Docket No. CI78-945, Amerada Hess Corp. Docket Nos. CS76-842, et al., Devon Corp. et al. Docket No. CI78-400, Amoco Production Co. Docket Nos. CS77-364, et al., George J. Ablah, d.b.a. Little George Oil Co. and Magnum Land Corp. (formerly George J. Ablah, d.b.a. Little George Oil Co.), et al. Docket No. CI78-950, Quintana Oil & Gas Corp. Docket No. CI78-882, Exxon Corp. Docket No. CI78-943, Quintana Offshore, Inc. Docket No. CS78-265, et al., Gene McDaniel, et al. Docket No. G-11637, Gulf Oil Corp. Docket No. G-7241, Southland Royalty Co. Docket No. G-4547, Atlantic Richfield Co. Docket No. CI78-51, Northwest Exploration Co. Docket Nos. CI77-781, Continental Oil Co.
CAG-5. Docket No. CP76-530, Transcontinental Gas Pipe Line Corp.
CAG-6. Docket No. CP78-271, Columbia Gas Transmission Corp.
CAG-7. Docket No. CP78-337, Trunkline Gas Co.
CAG-8. Docket No. CP-78-50, Trunkline Gas Co.
CAG-9. Docket No. CP77-104, Columbia Gas Transmission Corp.
CAG-10. Docket No. CP78-365, United Gas Pipe Line Co.
CAG-11. Docket Nos. CP78-339 and CP78-363, Transcontinental Gas Pipe Line Corp.

I. PIPELINE RATE MATTERS

RP-1. Docket No. RP78-66, Cimarron Transmission Co.

II. PRODUCER MATTERS

CI-1. Docket No. CI78-968, *United Gas Pipe Line Company* v. *Exchange Oil & Gas Corporation.*

III. PIPELINE CERTIFICATE MATTERS

CP-1. Docket No. CP78-26, United Gas Pipe Line Co.
CP-2. Docket No. CP77-610, Northern Natural Gas Co.
CP-3. Docket No. CP78-4, Transcontinental Gas Pipe Line Corp.

KENNETH F. PLUMB,
Secretary.

[S-1820-78 Filed 9-7-78; 2:07 pm]

[6740-02]

6

FEDERAL ENERGY REGULATORY COMMISSION.

"FEDERAL REGISTER" CITATION OF PREVIOUS ANNOUNCEMENT: Published September 5, 1978, 43 FR 39479.

PREVIOUSLY ANNOUNCED TIME AND DATE OF MEETING: 10 a.m., September 6, 1978.

CHANGE IN THE MEETING: The following item has been added:

Item No., Docket No., and Company

CP-5. CP78-506, Consolidated Gas Supply Corp., et al.

KENNETH F. PLUMB,
Secretary.

[S-1820-78 Filed 9-7-78; 2:07 pm]

[6210-01]

7

FEDERAL RESERVE SYSTEM (Board of Governors).

"FEDERAL REGISTER" CITATION OF PREVIOUS ANNOUNCEMENT: Sent to Federal Register on September 6, 1978.

PREVIOUSLY ANNOUNCED TIME AND DATE OF MEETING: 10 a.m., Wednesday, September 13, 1978 (following the open portion).

CHANGE IN THE MEETING: The closed portion of the meeting of Wednesday, September 13, 1978 has been canceled.

CONTACT PERSON FOR MORE INFORMATION:

Mr. Joseph R. Coyne, Assistant to the Board, 202-452-3204.

Dated: September 7, 1978.

THEODORE E. ALLISON,
Secretary of the Board.

[S-1814-78 Filed 9-7-78; 11:48 am]

[4110-39]

8

NATIONAL COUNCIL ON EDUCATIONAL RESEARCH.

DATE AND TIME: September 15, 1978, 9:30 a.m. to 3:30 p.m.

PLACE: Room 823, National Institute of Education, 1200 19th Street NW., Washington, D.C.

STATUS: Certification has been received from the HEW Office of General Counsel, that in the opinion of that office, the NCER "would be authorized to close portions of its meeting on September 15, 1978, under 5 U.S.C. 522b(c)(9)(B) and 45 CFR 1440.2(a)(9) for the purposes of reviewing and discussing with the Director of NIE, the proposed executive branch budget for fiscal 1980, in particular, the sections dealing with the proposed budget and funding priorities of NIE." Agenda item 76 will be closed, the rest of the agenda remains open to the public.

MATTERS TO BE CONSIDERED:

1. Approval of July 14, 1978 minutes (9:30 a.m. to 9:35 a.m.).
2. Director's Report (9:35 a.m. to 10 a.m.).
3. Discussion with panel for review of Laboratory and Center Operations (10 a.m. to 12:15 p.m.).
4. Swearing-in ceremony for new members (1:30 p.m. to 1:45 p.m.).
5. NCER Committee Reports (1:45 p.m. to 2:15 p.m.).
6. Closed: Executive Session: Fiscal year 1980 budget (2:15 p.m. to adjournment).

CONTACT PERSON FOR MORE INFORMATION:

Mrs. Ella L. Jones, Administrative Coordinator, telephone 202-254-7900.

PETER M. GERBER,
Chief, National Council on Educational Research Staff.

[S-1819-78 Filed 9-7-78; 12:16 pm]

[7905-01]

9

RAILROAD RETIREMENT BOARD.

PREVIOUSLY ANNOUNCED TIME AND DATE OF THE MEETING: 9:30 a.m., September 15, 1978.

CHANGES IN THE MEETING: Additional item to be considered at open meeting:

(14) Security (building security)—(security of records).

CONTACT PERSON FOR MORE INFORMATION:

R. F. Butler, Secretary of the Board, Com No. 312-751-4920; FTS No. 387-4920.

[S-1818-78 Filed 9-7-78; 12:16 pm]

[7910-01]

10

RENEGOTIATION BOARD.

DATE AND TIME: Tuesday, September 19, 1978; 10 a.m.

PLACE: Conference Room, 4th floor, 2000 M Street NW., Washington, D.C. 20446.

STATUS: Matters 1 through 9 are open to public observation. Matters 10 and 11 are not applicable for status.

MATTERS TO BE CONSIDERED:

1. Approval of minutes of meeting held September 12, 1978, and other Board meetings, if any.
2. Recommended clearances without assignment (List 1919):
   A. Titanium Metals Corp. of America, fiscal year ended December 28, 1975.
   B. Bliss and Laughlin Industries, fiscal year ended December 31, 1975.
   C. Bethlehem Steel Corp., fiscal year ended December 31, 1975.
   D. ITT Corp., fiscal years ended December 31, 1973, 1974, and 1975.
3. Exemption recommendations (ACE List 3006):
   A. Rea Magnet Wire Co., Inc., fiscal year ended September 30, 1976.
   B. Stewart Warner Corp., fiscal year ended September 30, 1976.
4. Special accounting agreement to use the accrual basis instead of cash basis of accounting: George G. Sharp, Inc., fiscal year ended December 31, 1976.
5. Special accounting agreement to use completed contract basis instead of percent of completion as requested by: Libby Dam Builders—A joint venture, fiscal year ended December 31, 1975.
6. Special accounting agreement to use completed contract basis instead of percent of completion as requested by: Morrison-Knudsen Co. & Associates, fiscal year ended December 31, 1975.
7. Special accounting agreement to use accrual basis instead of cash basis as requested by: Kay & Associates, Inc., fiscal year ended December 31, 1975, and all subsequent years.
8. Recommended agreement or assignment to a division: FMC CORP., consolidated with Gunderson, Inc., fiscal year ended December 31, 1971.
9. Recommended clearances without assignment (List 1920):
   A. Technical Services Enterprises, Inc., fiscal years ended April 30, 1973 and 1974.
   B. Ex-Cell-O Corp., fiscal years ended November 30, 1974 and 1975.
   C. R. E. Darling Co., Inc., fiscal year ended September 30, 1976.
   C-1 Durodyne Inc., fiscal year ended March 31, 1976.
   D. Kaiser Aluminum & Chemical Corp., fiscal year ended December 31, 1975.
   E. Kaiser Aluminum & Chemical Sales Inc., fiscal year ended December 31, 1975.
   F. Standard Pressed Steel Co., fiscal year ended December 31, 1975.
   G. Control Data, fiscal years ended December 31, 1973 and 1974.
   G-1 Computing Devices of Canada, fiscal years ended September 30, 1973 and November 30, 1973.
   G-2 Control Data Canada Ltd., fiscal year ended November 30, 1974.
10. Approval of agenda for meeting to be held October 3, 1978.
11. Approval of agenda for other meetings, if any.

CONTACT PERSON FOR MORE INFORMATION:

Kelvin H. Dickinson, Assistant General Counsel-Secretary, 2000 M Street NW., Washington, D.C. 20446, 202-254-8277.

Dated September 7, 1978.

GOODWIN CHASE,
Chairman.

[S-1822-78 Filed 9-7-78; 2:41 pm]

[8010-01]

11

SECURITIES AND EXCHANGE COMMISSION.

"FEDERAL REGISTER" CITATION OF PREVIOUS ANNOUNCEMENT: 43 FR 39216, August 29, 1978.

STATUS: Closed meeting.

PLACE: Room 825, 500 North Capitol Street, Washington, D.C.

TIME AND DATE PREVIOUSLY ANNOUNCED: Thursday, September 7, 1978.

CHANES IN THE MEETING: The following additional items will be considered at the closed meeting, following the 10 a.m. open meeting, on Thursday, September 7, 1978:

Consideration of amicus participation.
Formal order of investigation.
Litigation matter.
Settlement of injunctive action.

Commissioners Loomis, Evans, Pollack, and Karmel determined that Commission business required consideration of these matters and that no earlier notice thereof was possible.

SEPTEMBER 6, 1978.

[S-1813-78 Filed 9-7-78; 9:10 am]

[8010-01]

12

SECURITIES AND EXCHANGE COMMISSION.

Notice is hereby given, pursuant to the provisions of the Government in the Sunshine Act, Pub. L. 94-409, that the Securities and Exchange Commission will hold the following meetings during the week of September 11, 1978, in Room 825, 500 North Capitol Street, Washington, D.C.

A closed meeting will be held on Wednesday, September 13, 1978, at 10 a.m. An open meeting will be held on Thursday, September 14, 1978, at 10 a.m.

The Commissioners, their legal assistants, the Secretary of the Commission, and recording secretaries will attend the closed meeting. Certain staff members who are responsible for the calendared matters may be present.

The General Counsel of the Commission, or his designee, has certified that, in his opinion, the items to be considered at the closed meeting may be considered pursuant to one or more of the exemptions set forth in 5 U.S.C. 552b(c)(4)(8)(9)(A) and (10) and 17 CFR 200.402 (a)(8)(9)(i) and (10).

Chairman Williams, and Commissioners Loomis, Evans, Pollack and Karmel determined to hold the aforesaid meetings in closed session.

The subject matter of the closed meeting scheduled for Wednesday, September 13, 1978, at 10 a.m., will be:

Formal orders of investigation.
Freedom of Information Act appeal.
Institution of administrative proceedings of an enforcement nature.
Institution of injunctive actions.
Regulatory matter bearing enforcement implications.
Report of investigation.
Settlement of administrative proceedings of an enforcement nature.
Settlement of injunctive action.
Other litigation matters.

The subject matter of the open meeting scheduled for Thursday, September 14, 1978, at 10 a.m. will be:

1. Consideration of whether or not to reinstate Bruce Flamm to practice before the Commission as an accountant. For further information, please contact Ernest Ten Eyck at 202-755-7471.
2. Consideration of the application of John R. Patterson to reenter the securities business as a registered representative, with Offerman & Co., Inc., a registered broker-dealer, in a nonsupervisory, nonproprietary capacity. For further information, please contact Michael F. Perlis at 202-775-1650.
3. Consideration of the application of Harry Adler for a letter advising him that the staff will recommend to the Commission that he be permitted to return to the securities business if and when he demonstrates that he has a specific prospective employer and that he will be adequately and appro-

priately supervised. For further information, please contact Michael F. Perlis at 202-755-1650.

4. Consideration of two releases announcing (a) the adoption of proposed amendments to Securities Exchange Act Rule 10b-10 (17 CFR 240.10b-10), and (b) a proposal to adopt Securities Exchange Act Rule 15c2-12 to require disclosure of mark-downs in "riskless" principal transactions in municipal securities. For further information, please contact Jeffrey R. Steele at 202-755-7587.

5. Consideration of whether or not the Commission should permit the American Stock Exchange, Inc., through modification of its listing standards, to expand the universe of securities eligible to be listed and traded thereon; if listed, these securities would be subject to the Exchange's restrictions on off-board principal transactions. For further information, please contact Michael J. Kulczak at 202-755-7484.

6. Consideration of whether or not the Commission should authorize the Division of Corporation Finance to issue a letter that affirms the position taken in the Division's letter of March 21, 1978. That letter denied a no-action request from the Puerto Rico Industrial, Medical and Environmental pollution Control Facilities Financing Authority in regard to a proposed offering of industrial development bonds without compliance with the registration requirements of the Securities Act of 1933 or the filing and qualification provisions of the Trust Indenture Act of 1939. These bonds would not necessarily satisfy the qualifications for exemption from Federal taxation under section 103(a)(1) of the Internal Revenue Code of 1954 that are specified in exemptive section 3(a)(2) of the Securities Act; the bonds are, however, exempted by a different statue from all Federal, State and local taxation. For further information, please contact Jennifer Sullivan at 202-376-8090.

7. Consideraton of proposed Rule 480 and conforming amendment to Rule 459 concerning automatic effectiveness of post-effective amendments to regislation statements on Form S-8 and possible expansion of Rule 153 to permit delivery of prospectuses relating to securities registered on that form which are traded in unsolicited transactions on the automated quotation system of a national securities association registered under Secton 15A of the Exchange Act. For further information, pleased contact John Granda at 202-755-1750.

8. Consideration of proposed amendments to Rules 144 and 148 under the Securities Act of 1933 which would relax the volume limitation and brokerage transaction requirements of these rules. For further informaton, please contact Peter J. Romeo at 202-755-1240.

For futher information, please contact John Ketels at 202-755-1120.

SEPTEMBER 6, 1978.

[S-1821-78 Filed 9-7-78; 2:07 pm]

Federal Register

MONDAY, SEPTEMBER 11, 1978
PART II

DEPARTMENT OF HEALTH, EDUCATION, AND WELFARE

Public Health Service

■

HEALTH MAINTENANCE ORGANIZATIONS

Proposed Requirements

[4110-85]

DEPARTMENT OF HEALTH, EDUCATION, AND WELFARE

Public Health Service

[42 CFR Part 110]

HEALTH MAINTENANCE ORGANIZATIONS

Requirements for a Health Maintenance Organization

AGENCY: Public Health Service, HEW.

ACTION: Notice of proposed rulemaking.

SUMMARY: This notice sets forth proposals for amending the requirements regarding the organization and operation of qualified health maintenance organizations (HMO's) that were published on June 8, 1977, in the FEDERAL REGISTER. Certain provisions have been added or changed or both in response to the HMO Amendments of 1976 to provide greater detail in identifying members of the medical group and staff of the HMO; defining contractual arrangements for the provision of basic and supplemental health services; and greater emphasis has been given to the importance of the policy making body and of the plan management in meeting the fiscal viability requirement of the law. Interested parties are invited to submit written comments and suggestions concerning the proposed rules.

DATE: Comments must be received on or before November 13, 1978.

ADDRESSES: Written comments should be sent to the Director, Office of Health Maintenance Organizations, Office of the Assistant Secretary for Health, Park Building, 3rd Floor, 12420 Parklawn Drive, Rockville, Md. 20857. The comments will be available for public inspection and copying at the above address between the hours of 8:30 a.m. and 5 p.m., Monday through Friday, except for Federal holidays.

FOR FURTHER INFORMATION CONTACT:

Howard R. Veit, Director, Office of Health Maintenance Organizations, Park Building, 3rd Floor, 12420 Parklawn Drive, Rockville, Md. 20857, 301-443-4106.

SUPPLEMENTARY INFORMATION: On June 8, 1977, the Secretary published interim regulations in the FEDERAL REGISTER (42 FR 29400-16) to implement certain provisions of Title XIII of the Public Health Service Act, as amended by Pub. L. 94-460, the Health Maintenance Organization Amendments of 1976. The interim regulations allowed organizations to qualify under the less restrictive provisions of the amended law. In the preamble to the interim regulations, the Department stated its intent to issue a Notice of Proposed Rulemaking which would propose to revise the interim regulations and to implement all provisions of the amended law. Based on the new law and 4 years of program experience, a number of changes are proposed in the regulations.

Significant changes are summarized as follows:

A definition of "medical group member" is provided in § 110.101 to clarify the identity of those to whom the term "member" applies in the definition of a medical group and in the requirements for continuing education.

The term "direct service contract" refers to the method of providing health services through health professionals other than members of the HMO's staff or through entities other than medical groups or individual practice associations, and has been defined in § 110.101.

A definition of "staff of the HMO" is provided in § 110.101 to assure a clear distinction between health professionals employed by the HMO and arrangements made with health professionals through direct service contracts, as well as to provide explicit requirements that an organization must meet to qualify as a staff model HMO.

The health status and enrollment requirements of § 110.108(f) have been clarified by defining the term "group" as used in that section.

Section 110.102(d) has been added to include the Department's long-standing interpretation of the requirements of Title XIII, that a qualified HMO may not offer prepaid health services which do not include all the basic health services set forth in § 110.102(a). This limitation is not to be construed as interfering with the right of the HMO to conduct unrelated business, including the provision of other than prepaid health care and the selling of health insurance.

Section 110.104(a)(2) has been added to specify the unusual circumstances under which the Secretary may waive the requirement that after its third year of operation a qualified HMO may not provide services through a medical group which does not devote at least 35 percent of its professional activity to services to the HMO's enrollees. The first circumstance, (A), recognizes that a large group which comprises more than 20 percent of the physicians in a community will have responsibilities to that community other than through the HMO. In that context, the group can provide full service to the enrollees of the HMO and still fail to meet the 35 percent requirement. The second circumstance, (B), recognizes that the HMO may have insufficient members to require utilization of 35 percent of the group's services. The third, (C), recognizes that a medical group may serve two or more HMO's and permits the requirement to be waived if these HMO's utilize 35 percent of the group's services in the aggregate.

Section 110.104(c)(3) requires that the HMO provide in its contract with a medical group or individual practice association that these entities assume financial risk for the services provided by their health professionals, as well as for a portion of the risk for hospitalization costs of the enrollees they serve. In addition, § 110.104(c) provides that the HMO's contracts with these entities must include provisions requiring acceptance by health professionals associated with these entities of control mechanisms which will assist in a cost-effective operation. While other approaches may be found acceptable, set forth below are examples of approaches which the Secretary would accept as meeting these requirements:

1. HMO-MEDICAL GROUP CONTRACT

Health professional services. An HMO contracts with a medical group for a specific range of services and the medical group agrees to provide or arrange for the provision of the services of health professionals which are provided as basic health services with the exception of medically necessary emergency services not provided through the HMO, inpatient hospital services provided by employees or staff of a hospital or provided by staff of other entities, and unusual or infrequently used services. The medical group agrees that it will provide these services in exchange for an agreed upon monthly capitation-based payment from the HMO. Also, the medical group agrees that it will be at financial risk for costs in excess of the capitation-based payment. It must make up from its own resources any deficits which result from costs exceeding capitation payments. It retains any surpluses which may result from capitation payments exceeding actual costs. The distribution of any surpluses to the individual physicians is at the discretion of the medical group.

Hospitalization costs. An additional provision of the contract between the HMO and the medical group provides that the medical group is at risk for a portion of the member hospitalization costs. Prior to the beginning of each fiscal year, the HMO and the medical group agrees upon a projected rate of hospitalization for the coming year. To the extent that the actual utilization rate falls below the projected rate, the medical group may receive a

portion of the savings attributable to the difference. Likewise, to the extent that actual utilization exceeds projections, the medical group agrees to reimburse the HMO for the excess amount up to a maximum of, for example, 15 percent of the capitation received from the HMO.

The distribution to the individual physicians of any hospital-related surplus funds is at the discretion of the medical group. All determinations of costs, surpluses, and deficits are made according to written procedures agreed to by both parties.

2. HMO-INDIVIDUAL PRACTICE ASSOCIATION CONTRACT

Health professional services. An HMO contracts with an individual practice association for a specific range of services and the individual practice association agrees to provide or arrange for the provision of the services of health professionals which are provided as basic health services with the exception of medically necessary emergency services not provided through the HMO, inpatient hospital services provided by employees or staff of a hospital or provided by staff of other entities, and unusual or infrequently used services. The individual practice association agrees that it will provide these services in exchange for an agreed upon monthly capitation-based payment from the HMO. Also, the individual practice association agrees that it will be at financial risk for costs in excess of the capitation-based payment.

Risk pool. The individual practice association pays its physicians and other health professionals on the basis of 85 percent of billed charges: *Provided,* That the maximum allowable charge will be at the 80th percentile of usual, customary, and reasonable charges for the service in that area. The 15 percent which is held back by the individual practice association constitutes a risk pool to cover the individual practice association's excess cost for physician and other health professional services. The health professionals of the individual practice association agree, however, to make up from their own resources any deficits which may result from costs exceeding capitation payments which the risk pool may not cover.

Hospitalization costs. The contract between the HMO and the individual practice association provides that the IPA is at risk for a portion of the member hospital costs. Prior to the beginning of each fiscal year, the HMO and the individual practice association agree upon a projected rate of hospitalization for the coming year. To the extent the actual utilization rate falls below the projected rate, the individual practice association may receive a portion of the savings attributable to the difference. Likewise, to the extent that actual utilization exceeds projections, the individual practice association agrees to reimburse the HMO for the excess amount up to a maximum of, for example, 15 percent of the capitation payment received from the HMO. The distribution to the individual physicians of any hospital-related surplus funds is at the discretion of the indivdual practice association. All determinations of costs, surpluses, and deficits are made according to written procedures agreed to by both parties.

Section 1301(c) of the act provides that each HMO shall have a fiscally sound operation. In order to assure an adequate basis on which to assess fiscal soundness, the reporting requirements of § 110.108(o)(2) have been expanded to require HMO's to identify their affiliates, and to require HMO's to submit to the Secretary combining financial statements which include financial information pertaining to these affiliates. The term "affiliate" has been defined at § 110.101 in order to clearly identify the entities to which these new reporting requirements apply. In addition, the fiscal soundness provisions of § 110.108(a) have been expanded at § 110.108(a)(7) with respect to the contracts entered into by HMO's for the purchase of goods and services. In assessing fiscal soundness, the Secretary will closely scrutinize these contracts, giving consideration to whether the contract price exceeds what a prudent and cost-conscious buyer would pay for the goods and services involved.

Section 110.105(a)(3) has been expanded to clarify the flexibility for pricing which exists under a community rating system. Under a community rating system, rates of payments for health services would be based on the average per-member per-month revenue required by the HMO to meet its projected operating costs, capital, and reserve costs and generate surplus. (It is recognized that in their startup periods many HMO's anticipate initial operating deficits, and that therefore, rates of payment would not be calculated to generate revenues sufficient to cover all of these costs.) Flexibility is necessary for the HMO to respond effectively to the various purchasing practices of employers. Copies of technical papers explaining community rating are available upon request from the Office of the Director, Office of Health Maintenance Organizations, at the address set forth above. In addition, guidelines are being developed with respect to the implementation of certain provisions in Subpart A, such as the organizational structure of an HMO; and the level of basic and supplemental health services, including medically necessary health services. As these guidelines are developed and related policy issues are resolved, information about these policies and the availability of guidelines will be published in the FEDERAL REGISTER.

Policy issues regarding the nature and extent of participation by third parties, i.e., contractors and other non-HMO entities including medical groups and individual practice associations, in HMO activities such as management services, marketing, consulting services, and providing or arranging for health services are also being addressed by the Department. When these issues have been resolved, further amendments for Subpart A may be proposed and published as a Notice of Proposed Rulemaking in the FEDERAL REGISTER.

Section 110.109(a), concerning special requirements for HMO's which contract to provide services under Title XVIII or Title XIX of the Social Security Act, has been simplified and now only refers to the fact that an HMO serving Title XVIII or XIX beneficiaries must meet the applicable requirements of those titles and their related regulations.

The Assistant Secretary for Health for the Department of Health, Education, and Welfare, with the approval of the Secretary of Health, Education, and Welfare, hereby proposes to revise Subpart A of 42 CFR Part 110.

Dated: July 27, 1978.

JULIUS B. RICHMOND,
Assistant Secretary for Health.

Approved: August 14, 1978.

Joseph A. Califano, Jr.,
Secretary.

Subpart A—Requirements for a Health Maintenance Organization

Sec.
110.101 Definitions.
110.102 Health benefits plan: Basic health services.
110.103 Health benefits plan: Supplemental health services.
110.104 Provision of basic and Supplemental health services.
110.105 Payment for basic health services.
110.106 Payment for Supplemental health services.
110.107 Availability, accessibility, and continuity of basic and supplemental health services.
110.108 Organization and operation.
110.109 Special requirements: Titles XVIII and XIX of the Social Security Act.
110.110 Special requirements: Federal Employees' Health Benefits Program.

AUTHORITY: Sec. 215, 58 Stat. 690 (42 U.S.C. 216); secs. 1301-1316, as amended, 90 Stat. 1945-1960 (42 U.S.C. 300e-300e-15).

Subpart A—Requirements for a Health Maintenance Organization

§ 110.101 Definitions.

As used in this part:

"Act" means the Public Health Service Act.

"Affiliate" of an HMO means an individual who owns or controls an HMO, or a partnership, corporation, association, or other group, which is under common financial or beneficial ownership or under common directorship or trusteeship with the HMO, either directly or indirectly and which either provides a substantial portion of the HMO's revenue, health care services, or management services or receives a substantial portion of its revenues, health care services, or management services from the HMO.

"Basic health services" means health services described in § 110.102(a).

"Community rating system" means a system of fixing rates of payments for health services which meets the requirements of § 110.105(a)(3).

"Comprehensive health services" means as a minimum the following services which may be limited as to time and cost:

(1) Physician services (§ 110.102-(a)(1));

(2) Outpatient services and inpatient hospital services (§ 110.102(a)(2));

(3) Medically necessary emergency health services (§ 110.102(a)(3)); and

(4) Diagnostic laboratory and diagnostic and therapeutic radiologic services (§ 110.102(a)(6)).

"Direct service contract" means a contract for the provision of basic or supplemental health services or both between an HMO and (1) a health professional other than a member of the staff of the HMO, or (2) an entity other than a medical group or an individual practice association.

"Health maintenance organization" (HMO) means a legal entity which provides or arranges for the provision of basic and supplemental health services to its members in the manner prescribed by, is organized and operated in the manner prescribed by, and otherwise meets the requirements of, section 1301 of the Act and the regulations of this subpart.

"Health professionals" means physicians (doctors of medicine and doctors of osteopathy), dentists, nurses, podiatrists, optometrists, physicians' assistants, clinical psychologists, social workers, pharmacists, nutritionists, occupational therapists, physical therapists, and other professionals engaged in the delivery of health services who are licensed, practice under an institutional license, are certified, or practice under authority of the HMO, a medical group, individual practice association, or other authority consistent with State law.

"Individual practice association" means a partnership, association, corporation, or other legal entity:

(1) Which delivers or arranges for the delivery of health services and which has entered into a written services arrangement or arrangements with health professionals, a majority of whom are licensed to practice medicine or osteopathy. The written services arrangement shall provide:

(i) That these health professionals shall provide their professional services in accordance with a compensation arrangement established by the entity; and

(ii) To the extent feasible:

(A) For the sharing by these health professionals of health (including medical) and other records, equipment, and professional, technical, and administrative staff; and

(B) For the arrangement and encouragement of the continuing education of these health professionals in the field of clinical medicine and related areas.

"Medical group" means a partnership, association, corporation, or other group:

(1) Which is composed of health professionals licensed to practice medicine or osteopathy and of such other licensed health professionals (including dentists, optometrists, and podiatrists) as are necessary for the provision of health services for which the group is responsible;

(2) A majority of the members of which are licensed to practice medicine or osteopathy; and

(3) The members of which:

(i) As their principal professional activity (over 50 percent individually) engage in the coordinated practice of their profession and as a group responsibility have substantial responsibility (over 35 percent in the aggregate of their professional activity) for the delivery of health services to members of an HMO;

(ii) Pool their income from practice as members of the group and distribute it among themselves according to a prearranged salary or drawing account or other similar plan unrelated to the provision of specific health services;

(iii) Share health (including medical) records and substantial portions of major equipment and of professional, technical, and administrative staff;

(iv) Arrange for and encourage continuing education in the field of clinical medicine and related areas for the members of the group and health professionals employed by the group; and

(v) Establish an arrangement whereby a member's enrollment status in not known to the health professional who provides health services to the member.

"Medical group member" means a health professional engaged as a partner, associate, or shareholder in the medical group, or any other health professional employed by the group who may be designated as a medical group member by the medical group.

"Medically underserved population" means the population of an urban or rural area designated by the Secretary as an area with a shortage of personal health services. Designations of urban or rural areas will be made by the Secretary as described in § 110.203(g).

"Member", when used in connection with an HMO, means an individual who has entered into a contractual relationship with the HMO or on whose behalf a contractual arrangement has been entered into with the HMO under which the HMO assumes the responsibility for the provision to such member of basic health services and such supplemental health services as may be contracted for.

"Nonmetropolitan area" means an area no part of which is within an area designated as a standard metropolitan statistical area by the Office of Management and Budget and which does not contain a city whose population exceeds 50,000 individuals.

"Policymaking body" of an HMO means a board of directors, governing body, or other body of individuals which has the authority to establish policy for the HMO.

"Rural area" means any area not listed as a place having a population of 2,500 or more in Document No. PC(1)-A, "Number of Inhabitants", table VI, "Population of Places", and not listed as an urbanized area in table XI, "Population of Urbanized Areas" of the same document (1970 Census or most recent update of this document, Bureau of Census, U.S. Department of Commerce).

"Secretary" means the Secretary of Health, Education, and Welfare, and any other officer or employee of the Department of Health, Education, and Welfare to whom the authority involved has been delegated.

"Service area" means the geographic area as defined through zip codes, census tracts, or other geographic subdivisions, found by the Secretary to be the area within which the HMO provides or arranges for basic and supplemental health services that are available and accessible to its members as required by section 1301(b)(4) of the act.

"Staff of the HMO" means health professionals who are employees of the HMO and who:

(1) Provide services to HMO members at an HMO facility subject to the staff policies and operational procedures of the HMO;

(2) Engage in the coordinated practice of their profession and provide to members of the HMO health services which the HMO has contracted to provide;

(3) Share medical and other records, equipment, and professional, techni-

cal, and administrative staff of the HMO;

(4) Participate in continuing education in their professional field as provided or arranged for by the HMO; and

(5) Provide their professional services in accordance with a compensation arrangement, other than fee-for-service, established by the HMO. This arrangement may include, but is not limited to fee-for-time, retainer or salary.

"Subscriber" means a member who has entered into a contractual relationship with the HMO or who under the HMO group health services agreement is responsible for making basic health services payments to the HMO or on whose behalf these payments are made.

"Supplemental health services" means the health services described in § 110.103(a).

"Unusual or infrequently used health services" means:

(1) Those health services which are projected to involve fewer than 1 percent of the encounters per year for the entire HMO membership, or,

(2) Those health services the provision of which, given the enrollment projection of the HMO and generally accepted staffing patterns, is projected will require less than 0.25 full-time-equivalent health professionals.

§ 110.102 Health benefits plan: Basic health services.

(a) An HMO shall provide or arrange for the provision of basic health services to its members as needed and without limitations as to time and cost other than those prescribed in the act and these regulations, as follows:

(1) Physician services (including consultant and referral services by a physician), which shall be provided by a licensed physician, or if a service of a physician may also be provided under applicable State law by other health professionals, an HMO may provide the service through these other heath professionals;

(2) Outpatient services, which shall include diagnostic services, treatment services, and X-ray services, for patients who are ambulatory and may be provided in a nonhospital based health care facility or at a hospital; inpatient hospital services, which shall include but not be limited to, room and board, general nursing care, meals and special diets when medically necessary, use of operating room and related facilities, use of intensive care unit and services, X-ray services, laboratory, and other diagnostic tests, drugs, medications, biologicals, anesthesia and oxygen services, special duty nursing when medically necessary, physical therapy, radiation therapy, inhalation therapy, and administration of whole blood and blood plasma; outpatient services and inpatient hospital services shall include short-term rehabilitation services when medically necessary;

(3) Instructions to its members on procedures to be followed to secure medically necessary emergency health services both in the service area and out of the service area;

(4) At least 20 outpatient visits per member per year, as may be necessary and appropriate for short-term evaluative or crises intervention, mental health services, or both;

(5) Diagnosis, medical treatment and referral services (including referral services to appropriate ancillary services) for the abuse of or addiction to alcohol and drugs;

(i) Diagnosis and medical treatment shall include detoxification for alcoholism or drug abuse on either an outpatient or inpatient basis, whichever is medically determined to be appropriate, in addition to treatment for other medical conditions;

(ii) Referral services may be either for medical or for nonmedical ancillary services. Medical services shall be a part of basic health services; nonmedical ancillary services (such as vocational rehabilitation, employment counseling), need not be a part of basic health services;

(6) Diagnostic laboratory and diagnostic and therapeutic radiology services in support of basic health services;

(7) Home health services provided at a member's home by health care personnel, as prescribed or directed by the responsible physician or other authority designated by the HMO; and

(8) Preventive health services, which shall be made available to members and shall include at least the following:

(i) A broad range of voluntary family planning services;

(ii) Services for infertility;

(iii) Well-child care from birth;

(iv) Periodic health evaluations for adults;

(v) Eye and ear examinations for children through age 17, to determine the need for vision and hearing correction; and

(vi) Pediatric and adult immunizations, in accord with accepted medical practice.

(b) In addition, an HMO may include a health service described as a supplemental health service in § 110.103 in the basic health services provided or arranged for its members for a basic health services payment.

(c) The following are not required to be provided as basic health services:

(1) Corrective appliances and artificial aids;

(2) Mental health services, except as required under section 1302(1)(D) of the Act and paragraph (a)(4) of this section;

(3) Cosmetic surgery, unless medically necessary;

(4) Prescribed drugs and medicines incidental to outpatient care;

(5) Ambulance services, unless medically necessary;

(6) Care for military service connected disabilities for which the member is legally entitled to services and for which facilities are reasonably available to this member;

(7) Care for conditions that State or local law requires be treated in a public facility;

(8) Dental services;

(9) Vision and hearing care except as required by section 1302(1)(H)(vi) and paragraph (a)(8) of this section;

(10) Custodial or domiciliary care;

(11) Experimental medical, surgical, or other experimental health care procedures unless approved as a basic health service by the policymaking body of the HMO;

(12) Personal or comfort items and private rooms, unless medically necessary during inpatient hospitalization;

(13) Whole blood;

(14) Long term physical therapy and rehabilitation; and

(15) Durable medical equipment for home use (such as wheel chairs, surgical beds, respirators, dialysis machines).

(d) An HMO may not offer to provide or arrange for the provision of basic health services on a prepayment basis which do not include all the basic health services set forth in paragraph (a) of this section or which are limited as to time and cost except in a manner prescribed by this subpart.

§ 110.103 Health benefits plan: Supplemental health services.

(a) Each HMO may provide to its members any of the following health services, which may be limited as to time and cost:

(1) Services of facilities for intermediate and long-term care;

(2) Vision and hearing care not included as a basic health service;

(3) Dental services;

(4) Mental health services not included as a basic health service;

(5) Long-term physical medicine and rehabilitative services (including physical therapy);

(6) Prescription drugs prescribed in the course of provision of basic outpatient or supplemental health services; and

(7) Other health services which are not included as basic health services and which have been approved by the Secretary for delivery as supplemental health services.

(b) An HMO shall determine the level and scope of supplemental health services included with basic health ser-

vices provided to its members for a basic health services payment or those services offered to its members as supplemental health services.

(c) An HMO is authorized, in connection with the prescription or provision of prescription drugs, to maintain, review, and evaluate a drug use profile of its members receiving such services, evaluate patterns of drug utilization to assure optimum drug therapy, and provide for instruction of its members and of health professionals in the use of prescription and nonprescription drugs. Each HMO providing these services shall insure that:

(1) The program is developed jointly by the physicians and pharmacists associated with the HMO;

(2) The objectives of the program are explained to all health professionals and members of the HMO;

(3) Individual rights are protected and that all information regarding and identifying an idividual is available only to appropriate health professionals of the HMO and to the individual member at his request;

(4) The primary thrust of the program is optimum drug therapy for the individual member of the HMO; and

(5) The information obtained in drug utilization review is utilized in educational programs for professionals and members of the HMO.

§ 110.104 Provision of basic and supplemental health services.

(a)(1) The services of health professionals which are provided as basic health services shall, except as provided in paragraph (d) of this section, be provided or arranged for through health professionals who are employed by the HMO as members of the staff of the HMO, through a medical group or groups, through an individual practice association or associations, through health professionals who have direct service contracts with the HMO for the provision of these services, or through any combination of staff, medical group or groups, individual practice association or associations, or health professionals who have direct service contracts with the HMO.

(2) Within the 3-year period beginning with the month following the month in which an HMO is found by the Secretary to be qualified, these services may also be provided by an entity which would be a medical group for the purposes of this subpart but for the requirements of subparagraph (3)(i) of the definition of medical group in § 110.101. After this 3-year period, these services may be provided by such an entity only if the Secretary determines that the principal professional activity (over 50 percent individually) of the entity's members is the coordinated practice of their profession, amd (i) at least 20 percent of the physicians in the HMO's service area are members of the entity, or (ii) the HMO has an insufficient number of members to require utilization of 35 percent of the entity's services, or (iii) the entity serves two or more HMO's which in the aggregate utilize at least 35 percent of the entity's services.

(b) An HMO may not in any of its fiscal years enter into direct service contracts if the amounts projected to be paid under these direct service contracts for basic and supplemental health services exceed 15 percent of the total amount projected to be paid in that fiscal year by the HMO to all physicans for the provision of basic and supplemental health services, or, if the HMO principally serves a rural area, 30 percent of this amount. However, this limitation does not apply to direct service contracts with entities which but for the requirements of subparagraph (3)(i) of the definition of "medical group" in § 110.101 would be medical groups and to contracts for services described in paragraph (d) of this section.

(c) HMO contracts with health professionals, medical groups, individual practice associations, or other entities for the provision of basic and supplemental health services shall include at least the following:

(1) A description of responsibilities of the parties to the contract;

(2) The agreed upon compensation for services;

(3) An agreement by the medical group or individual practice association to provide or arrange for the provision of all medically necessary basic and supplemental health services which are covered by the contract to members of the HMO for the agreed upon compensation. In the case of a contract with an individual practice association, the IPA shall be required to include in its services arrangement with its health professionals a requirement that they provide all medically necessary services covered under such arrangement to HMO members without regard to whether funds of the IPA are available for payment to the health professionals for such services;

(4) Provisions requiring that an agreed upon portion of the amount of the HMO's hospitalization costs exceeding its yearly budget estimates which is attributable to inpatient utilization in excess of the projected rate of utilization on which budget estimates are based shall be paid to the HMO by the medical group or IPA;

(5) Provisions requiring acceptance by health professionals associated with medical groups and individual practice associations of control mechanisms which will assist in cost-effective operation. These mechanisms shall be designed to monitor utilization and avoid unnecessary or unduly costly utilization of health services and otherwise promote cost effectiveness in the provision of basic health services;

(6) Assurances that medical groups and individual practice associations or health professionals associated with them will have and maintain professional liability coverage, either through insurance or self-insurance;

(7) An agreement that the medical group, individual practice association or other entity, the members of the group, association or other entity, and health professionals contracting with the HMO will look solely to the HMO for compensation for services provided to members of the HMO under the applicable contracts between the HMO and its members, except for any copayments permitted in these members' contracts, and will not assert any claim for compensation against the members served in excess of these copayments; and

(8) In the case of contracts with health professionals, except for unusual or infrequently used services, include provisions requiring appropriate continuing education and any other provisions as the Secretary may require.

(d) Basic health services shall be provided in accordance with paragraph (a) of this section unless they are:

(1) Unusual or infrequently used services; or

(2) Health services as described in paragraph (f)(1) of this section; or

(3) Services provided as part of the inpatient hospital services by employees or staff of a hospital or provided by staff of other entities such as community mental health centers, home health agencies, visiting nurses' associations, independent laboratories, or family planning agencies.

(e) Supplemental health services shall be provided or arranged for by the HMO and need not be provided by providers of basic health services under contract with the HMO.

(f) Each health maintenance organization shall:

(1) Pay the provider, or reimburse its members for the payment of reasonable charges for basic health services (or supplemental health services which the HMO agreed to provide on a prepayment basis) for which its members have contracted, which because of medical necessity (and not for reasons of convenience) the member obtained within the service area or out of the service area other than through the HMO. As used in this paragraph, the medical necessity refers to those inpatient and outpatient services which may not be delayed until the HMO's facilities or health service providers can be used without incurring the risk of the member's death or the

permanent or serious impairment of the member's health.

(2) Adopt procedures to review promptly all claims from members for reimbursement for the provision of health services described in paragraph (f)(1) of this section which procedures shall include the determination of the medical necessity for obtaining the services other than through the HMO; and

(3) Provide instructions to its members on procedures to be followed to secure these health services.

§ 110.105 Payment for basic health services.

(a) Each HMO shall provide or arrange for the provision of basic health services for a basic health services payment which:

(1) Is to be paid on a periodic basis without regard to the dates health services (within the basic health services) are provided;

(2) Is fixed without regard to the frequency, extent, or kind of health services (within the basic health services) actually furnished;

(3) Except as provided in paragraph (b) of this section, is fixed under a community rating system. Under a community rating system, rates of payments for health services are based on the per-member per-month revenue required by the HMO. Payments from a specific group of subscribers must yield revenues substantially equivalent to the product of the total number of enrollees of the group and the per-member per-month revenue required by the HMO. Rates of payment may be determined on a per-person or per-family basis and may vary with the number of persons in a family, but except as otherwise authorized in this paragraph, these rates must be equivalent for all individuals and for all families of similar composition.

However, payments may not vary because of actual or anticipated utilization of services by individuals associated with any specific group of subscribers. These provisions do not preclude changes in the rates of payments for health services based on a community rating system which are established for new enrollments or reenrollments and which changes do not apply to existing contracts until the renewal of these contracts. Only the following differentials in rates of payments may be established under a community rating system:

(i) Nominal differentials in rates may be established to reflect differences in marketing costs and the different administrative costs of collecting payments from the following categories of potential subscribers:

(A) Individual (nongroup) subscribers (including their families),

(B) Small groups of subscribers (100 subscribers or fewer),

(C) Large groups of subscribers (over 100 subscribers).

(ii) Nominal differentials in rates may be established to reflect the compositing of the rates of payment in a systematic manner to accommodate group purchasing practices of different employers. Thus, rates may vary from group to group because of variations in the rate structure of each group. For example, an HMO may base the rate charged to one group on a two step structure (i.e., a single rate and a family rate) and with respect to another group, on a three step structure (i.e., a single, a two-person family, and a three or more person family rate). The revenue generated by each group, however, must be substantially equivalent to the product of the total enrollees from the group and the per-member per-month revenue required by the HMO.

(iii) Differentials in rates may be established for subscribers enrolled in an HMO: (A) Under a contract with a governmental authority under section 1079 ("Contracts for Medical Care for Spouses and Children: Plans") or section 1086 ("Contracts for Health Benefits for Certain Members, Former Members and Their Dependents") of Title 10 ("Armed Forces"), United States Code; or (B) under any other governmental program (other than the health benefits program authorized by chapter 89 ("Health Insurance"), of Title 5 ("Government Organization and Employees"), United States Code; or (C) under any health benefits program for employees of States, political subdivision of States, and other public entities.

(iv) An HMO may establish a separate community rate for separate regional components of the organization upon satisfactory demonstration to the Secretary of the following:

(A) Each regional component is geographically distinct and separate from any other regional component;

(B) Membership is established with respect to the individual regional component, rather than with respect to the parent HMO; and

(C) Each regional component provides substantially the full range of basic health services to its members without extensive referral between components of the organization for these services, and without substantial utilization by any two components of the same health care facilities. The separate community rate for each regional component of the HMO must be based on the different costs of providing health services in the respective regions.

(4) May be supplemented by nominal copayments which may be required for the provision of specific basic health services. Each HMO may establish one or more copayment options.

(i) To insure that copayments are not a barrier to the utilization of health services or membership in the organization, an HMO may not impose copayment charges that exceed 50 percent of the total cost of providing any single service to its members, nor in the aggregate more than 20 percent of the total cost of providing all basic health services.

(ii) No copayment may be imposed on any subscriber or members covered by his contract with the HMO in any calendar year, when the copayments made by such subscriber or members in such calendar year total 50 percent of the total annual premium cost which such subscriber or members would be required to pay if he or they were enrolled under an option with no copayments, if such subscriber or members demonstrates that copayments in that amount have been paid in such year.

(b) In the case of an entity which before it became a qualified HMO under Subpart F of this part, provided comprehensive health services on a prepaid basis, the requirement of community rating shall not apply to the entity during the 48-month period beginning with the month following the month in which the entity became a qualified HMO.

(c) If, pursuant to any worker's compensation or employer's liability law or other legislation of similar purpose or import, a third party would be responsible for all or part of the cost of basic health services provided by the HMO if services had not been provided by the HMO, then the HMO may collect from the third party the portion of the cost of those services for which the third party would be responsible.

(d) HMO's may charge a late payment penalty on accounts receivable which are in arrears.

§ 110.106 Payment for supplemental health services.

(a) An HMO may require supplemental health services payments, in addition to the basic health services payments, for the provision of each health service included in the supplemental health services set forth in § 110.103 for which subscribers have contracted or may include supplemental health services in the basic health services provided its members for a basic health services payment.

(b) Supplemental health services payments may be made in any agreed upon manner, such as prepayment, or fee-for-service. Supplemental health services payments which are fixed on a prepayment basis, however, shall be fixed under a community rating system, except that, in the case of an

entity which before it became a qualified HMO under Subpart F of this part provided comprehensive health services on a prepaid basis, the requirement of this sentence shall not apply to that entity during the 48-month period beginning with the month following the month in which the entity became a qualified HMO.

(c) If, pursuant to any worker's compensation or employer's liability law or other legislation of similar purpose or import, a third party would be responsible for all or part of the cost of supplemental health services provided by the HMO if services had not been provided by the HMO, then the HMO may collect from the third party the portion of the cost of those services for which the third party would be responsible.

§ 110.107 Availability, accessibility, and continuity of basic and supplemental health services.

Within the HMO's service area, basic health services and those supplemental health services for which members have contracted shall:

(a) Be provided or arranged for by the HMO;

(b) Be available and accessible to each of the HMO's members promptly as appropriate with respect to:

(1) Its geographic location, hours of operation, and provisions for after-hours services (medically necessary emergency services must be available and accessible 24 hours a day, 7 days a week); and

(2) Staffing patterns within generally accepted norms for meeting the projected membership needs; and

(c) Be provided in a manner which assures continuity, including but not limited to:

(1) Provision of a health professional who is primarily responsible for coordinating the member's overall health care; and

(2) Development of a health (including medical) recordkeeping system through which pertinent information relating to the health care of the patient is accumulated and is readily available to appropriate professionals.

§ 110.108 Organization and operation.

Each HMO shall:

(a) *Fiscally sound operation.* Have a fiscally sound operation as demonstrated by:

(1) Evidence satisfactory to the Secretary of the capability of its policy making body to exercise effective control over policy (including marketing policy) and personnel (including contractors, as described in paragraph (a)(2) of this section) sufficient to assure that management actions are in the best interests of the HMO;

(2) A full-time Executive Director and additional full- or part-time management personnel as are necessary to direct, review, and evaluate the management functions of marketing, finance, and health plan administration: *Provided,* That if contractors are used to perform these executive and management functions, it must be within the authority of the HMO to select or approve the selection and to discharge or require the discharge of the Executive Director and to evaluate and terminate the contract activity;

(3) In the case of an HMO which has not earned a cumulative net operating surplus during the three most recent fiscal years, or has not earned a net operating surplus during the most recent fiscal year, or does not have a positive net worth, or is seeking Federal HMO operating loan assistance under this part;

(i) A financial plan satisfactory to the Secretary, which identifies the acheivement and maintenance of a positive cash flow, including provisions for retirement of existing and proposed indebtedness and generation of positive operating surpluses, and which demonstrates the ability to establish all reserves or to meet other financial requirements imposed by State laws pertaining to fiscal responsibility and demonstrates the ability to establish all reserves or to meet other financial requirements which the Secretary determines are necessary to the repayment of principal and interest on loans made or guaranteed under this part, and

(ii) a detailed marketing plan consistent with the financial plan which projects enrollment for the periods included in the financial plan;

(4) An approach to the risk of insolvency which allows for continuation of benefits for the duration of the contract period for which payment has been made, continuation of benefits to members who are confined on the date of insolvency in an inpatient facility until their discharge, payments to unaffiliated providers for services rendered;

(5) The HMO procuring and maintaining in force a fidelity bond or bonds in an amount, but not less than $100,000, as may be fixed by its policy making body, covering every officer and employee entrusted with the handling of its funds. The bond may have reasonable deductibles, based upon the financial strength of the HMO; and

(6) The HMO securing and maintaining insurance policies or other arrangements approved by the Secretary which safeguard and insure its assets against fire, theft, fraud, embezzlement, and other casualty risks and which insure the HMO against losses arising from professional liability claims; and

(7) The HMO entering into contracts or arrangements for the purchase or provision of supplies, equipment, facilities, and services on an efficient, effective, and economical basis at a cost which does not exceed what a prudent and cost-conscious buyer would pay for the supplies, equipment, facilities, and services involved.

(b) *Financial risk.* Assume full financial risk on a prospective basis for the provision of basic health services, except that an HMO may obtain insurance or make other arrangments:

(1) For the cost of providing to any member basic health services the aggregate value of which exceeds $5,000 in any year;

(2) For the cost of basic health services provided to its members other than through the HMO because medical necessity required their provision before they could be secured through the HMO; and

(3) For not more than 90 percent of the amount by which its costs for any of its fiscal years exceed 115 percent of its income for that fiscal year.

(c) *Broadly representative enrollment.* After full and fair disclosure of benefits, coverage, rates, grievance procedures, location, and hours of service, and a general description of participating providers and financial condition of the HMO, offer enrollment to persons who are broadly representative of the various age, social, and income groups within its service area. In the case of an HMO which has a medically underserved population located (in whole or in part) in its service area, not more than 75 percent of the members of that organization may be enrolled from the medically underserved population unless the area in which that population resides is also a rural area.

(d) *Open enrollment.* If it has either provided comprehensive health services on a prepaid basis for a period of at least 5 years or has an enrollment of at least 50,000 members, have an open enrollment period at least once during each fiscal year next following a fiscal year in which it did not have a financial deficit. (For purposes of this paragraph, financial deficits must be reported and certified by an independent Certified Public Accountant.) The period of open enrollment shall be determined under paragraph (d)(1) of this section. During open enrollment, the HMO shall accept individuals for membership in the order in which they apply for enrollment and, except as provided in paragraph (d)(2) of this section, without regard to pre-existing illness, medical condition, or degree of disability.

(1) An open enrollment period for an HMO shall be the lesser of—

(i) Thirty days, or

(ii) The number of days in which the organization enrolls a number of individuals at least equal to 3 percent of its total net increase in enrollment (if any) in the fiscal year preceding the fiscal year in which the open enrollment period is held. In determining the total net increase in enrollment in an HMO, the HMO may not include any individual who is enrolled in the HMO through a group which had a contract for health care services with the HMO at the time that the HMO was determined to be a qualified HMO under subpart F of this part.

(2) An HMO is not required to enroll individuals who are confined to an institution because of chronic illness, permanent injury, or other infirmity which would cause economic imparment to the HMO, as demonstrated to the satisfaction of the Secretary, if these individuals were enrolled.

(3) An HMO is not required to make the effective date of benefits for individuals enrolled under this paragraph less than 90 days after the date of enrollment.

(4) A health maintenance organization may require a health examination of individuals applying for membership at periods other than those time periods set aside for individual open enrollment. Enrollment may be denied based on results of the health examination.

(5) The Secretary may, under paragraph (e) of this section, waive the requirements of this paragraph for an HMO which demonstrates that compliance with the provisions of this paragraph would jeopardize it economic viability in its service area.

(e) *Waiver of open enrollment.* In order to obtain a waiver under paragraph (d)(5) of this section, the HMO shall submit documentation that it has prospectively determined on an actuarial basis, utilizing data available in the area or from similar organizations elsewhere, that the average utilization of services of potential individual members would so increase costs as to jeopardize the economic viability of the organization if it maintained an open enrollment period.

(f) *Health status and enrollment.* Not expel or refuse to reenroll any member because of his health status or his health care needs, nor refuse to enroll individual members of a group on the basis of the health status or health care needs of those individuals. For purposes of this paragraph, the term "group" means eligible employees and their dependents of employing entities subject to section 1310 of the act and subpart H of this part.

(g) *Conversion of membership.* Offer each subscriber leaving a group a membership agreement on the same terms and conditions as are available to a non-group subscriber.

(h) *Policy making body.* Be organized in such a manner that assures that:

(1) No later than 1 year after becoming operational as a qualified HMO, at least one-third of the membership of its policy making body will be members of the HMO. No member having ownership of or financial interest in, or employed by, or gaining financial reward from direct dealings with, the HMO or a plan-affiliated institution or organization, and no members of the immediate family of such a member shall be included in the minimum one-third member representation on the policy making body, except that none of the foregoing shall prohibit the payments of directors' fees or other similar fees, or interest and dividends derived from membership in an HMO cooperative, to persons serving on the policy making body, and

(2) There shall be equitable representation on the member portion of the policy making body of members from the medically underserved populations served by the HMO in proportion to their enrollment relative to the entire enrollment, except that if the membership from these medically underserved populations is at least 5 percent of the total enrollment, then those populations shall not be without representation.

(i) *Grievance procedures.* Be organized in a manner that provides meaningful procedures for hearing and resolving grievances between the HMO (including the staff of the HMO, the medical group, and the Individual practice association) and the members of the HMO, which procedures will assure that grievances and complaints will be transmitted in a timely manner appropriate decision making levels within the HMO which have authority to take corrective action, that a full investigation will be undertaken as appropriate, and that appropriate action will be taken promptly, including notification of concerned parties as to the results of the HMO's investigation.

(j) *Quality assurance program.* Have organizational arrangements, consistent with program emphasis on quality health care, for an ongoing quality assurance program for its health services which program:

(1) Stresses health outcomes to the extent consistent with the state of the art;

(2) Provides review by physicians and other health professionals of the process followed in the provision of health services;

(3) Utilizes systematic data collection of performance and patient results, provides interpretation of these data to its practitioners, and institutes needed change;

(4) Is designed in a manner likely to meet the standards established pursuant to section 1155(e) of the Social Security Act (i.e., Professional Standards Review) for services provided by hospitals and other operating health care facilities or organizations; and

(5) Includes written procedures for taking appropriate remedial action whenever it is determined that inappropriate or substandard services have been provided or that services which should have been furnished have not been provided.

(k) *Certification of providers.* Assure that persons and entities through which the HMO provides basic and supplemental health services are certified under Title XVIII of the Social Security Act (Medicare) in accordance with 20 CFR part 405, or in accordance with the regulations governing participation of providers in the Medical Assistance Program under title XIX of the Social Security Act (Medicaid), or in the case of a hospital, is accredited by the Joint Commission on Accreditation of Hospitals.

(l) *Continuing education of health professionals.* Provide, or make arrangements for, continuing education for its health professional staff.

(m) *Health education.* In support of the provision of health services, offer its members the following:

(1) Health education services and education in the appropriate use of health services and in the contribution each member can make to the maintenance of his own health;

(2) Instruction in personal health care measures;

(3) Information about its services, including recommendations on generally accepted medical standards for use and frequency of its services; and

(4) Nutritional education and counseling.

(n) *Medical social services.* In support of the provision of health services, offer its members medical social services, which shall include appropriate assistance in dealing with the physical, emotional, and economic impact of illness and disability through services such as pre- and post-hospitalization planning; referral to services provided through community health and social welfare agencies; and, related family counseling.

(o) (1) *Reporting requirements.* Provide an effective procedure while safeguarding the confidentiality of the doctor-patient relationship; to develop, compile, evaluate, and report, at such times and in such manner as the Secretary may require, to the Secretary, to its members, and to the general public, statistics and other information relating to:

(i) The cost of its operations;

(ii) The patterns of utilization of its services;

(iii) The availability, accessibility, and acceptability of its services;

(iv) To the extent practical, developments in the health status of its members; and

(v) Other matters as the Secretary may require.

(2) (i) In addition, the HMO shall submit to the Secretary annually audited, combining financial statements for its most recent fiscal year. The combining financial statements shall display in separate columns the financial information described below for the HMO and each of its affiliates. These statements shall include at a minimum, for each year, an auditor's opinion and all relevant auditor's notes covering all entities in the combining financial statement, an income statement, a blance sheet, the elimination of inter-entity transactions and the combined net amounts, and a statement of changes in financial position. The Secretary may, upon a written request from an HMO and for good cause shown, waive the requirement that its combining financial statement include the financial information required in this paragraph with respect to a particular affiliate. An example of good cause would be the fact that the affiliate is required by a governmental agency to submit periodic financial reports in a form from which the information required by this paragraph cannot be practicably derived.

(ii) The HMO shall also submit with its annual combining financial statement (A) a list of its affiliates, identifying their officers and directors and the type of business transacted with the HMO, and (B) a statement of the HMO's principal debtors and creditors.

(p) *Human dignity.* Be organized and operated in a manner intended to preserve human dignity.

(q) *Confidentiality of health records.* Establish adequate procedures to insure confidentiality of its members' health (including medical) records; and

(r) *Referral information.* Make arrangements either directly or through its providers to assure that the HMO is kept informed about the services provided to its members by referral resources.

§ 110.109 Special requirements: Titles XVIII and XIX of the Social Security Act.

(a) As provided in section 1307(d) of the Act, an HMO which otherwise complies with section 1301(b) and section 1301(c) of the Act, and with the applicable regulations of this subpart, and which enrolls members who are entitled to insurance benefits under Title XVIII of the Social Security Act or to medical assistance under a State plan approved under Title XIX of that Act, may still be considered as an HMO, if with respect to its Title XVIII and Title XIX members it provides services and is operated as required by Title XVIII or XIX, as appropriate, and regulations thereunder.

(b) Notwithstanding any inconsistent requirements of this subpart, an HMO which enters into a contract with the Secretary under Title XVIII of the Social Security Act or with a State under Title XIX of that Act shall, with respect to its members entitled to insurance benefits or medical assistance under those titles, comply with the applicable Title XVIII or Title XIX requirements, including deductible and coinsurance requirements, in accordance with the provisions of Title XVIII or the Title XIX State plan of the State with which it is contracting. Copayment options which are not in accordance with a Title XIX State plan may not be imposed on Title XIX enrollees.

(c) Any grievance procedures authorized under Title XVIII or Title XIX of the Social Security Act are not superseded by the provisions of § 110.108(i).

§ 110.110 Special requirements: Federal employees' health benefits program.

An entity which provides health services to a defined population on a prepaid basis and which has members who are enrolled under the health benefits program authorized by Chapter 89 of Title 5, United States Code, may be considered as an HMO for purposes of receiving assistance under this part if with respect to its other members it provides health services in accordance with section 1301(b) of the Act and the applicable regulations of this part and is organized and operated in the manner prescribed by section 1301(c) of the Act and the applicable regulations of this Part.

[FR Doc. 78-25339 Filed 9-8-78; 8:45 am]

federal register

MONDAY, SEPTEMBER 11, 1978
PART III

DEPARTMENT OF HEALTH, EDUCATION, AND WELFARE

Public Health Service

■

ALCOHOL ABUSE AND ALCOHOLISM

Grants for Prevention, Treatment, and Rehabilitation Services and National Alcohol Research Centers

[4110-88]

Title 42—Public Health

CHAPTER I—PUBLIC HEALTH SERVICE, DEPARTMENT OF HEALTH, EDUCATION, AND WELFARE

SUBCHAPTER D—GRANTS

PART 54a—GRANTS FOR ALCOHOL ABUSE AND ALCOHOLISM PREVENTION, TREATMENT, AND REHABILITATION SERVICES AND NATIONAL ALCOHOL RESEARCH CENTERS

AGENCY: Public Health Service, HEW.

ACTION: Final regulations.

SUMMARY: These regulations implement provisions of the Comprehensive Alcohol Abuse and Alcoholism Prevention, Treatment, and Rehabilitation Act of 1970 as amended which authorize (1) formula grants to assist States in planning, establishing, maintaining, coordinating, and evaluating projects for the development of more effective prevention, treatment, and rehabilitation programs to deal with alcohol abuse and alcoholism, and (2) grants for alcohol abuse and alcoholism prevention and treatment projects.

EFFECTIVE DATE: September 11, 1978.

FOR FURTHER INFORMATION CONTACT:

Susan Farrell, Legislative Assistant, National Institute on Alcohol Abuse and Alcoholism, Alcohol, Drug Abuse, and Mental Health Administration, Parklawn Building, Room 16-C-10, 5600 Fishers Lane, Rockville, Md. 20857, phone: 301-443-3887.

SUPPLEMENTARY INFORMATION: Proposed regulations setting forth requirements for alcohol abuse and alcoholism formula and project grants were published on January 31, 1977 (42 FR 5866). Interested persons were invited to submit written comments, suggestions, or objections. The final regulations set forth below incorporate a number of the public comments received. Subpart A of these regulations is applicable to all grants authorized by title III of the act (42 U.S.C. 4571, et seq.) and by section 504 of title V of the act (42 U.S.C. 4588).

Subpart B of these regulations implements the statutory provisions (sections 301-303 of the act, 42 U.S.C. 4571-73) which authorize formula grants to States.

Subpart C of these regulations would implement the statutory provision (section 310 of the act, 42 U.S.C. 4576) which authorizes special grants to assist States in their efforts to implement the Uniform Alcoholism and Intoxication Treatment Act, which requires that alcoholism be approached as a medical and social problem rather than a crime. This subpart has been reserved and will be proposed and promulgated separately, at a later date.

Subpart D of these regulations implements the statutory provision (section 311 of the act, 42 U.S.C. 4577) which authorizes grants to (a) conduct demonstration and evaluation projects, (b) provide treatment and prevention services, (c) provide education and training, and (4) provide programs and services, in cooperation with law enforcement personnel, schools, courts, penal institutions, and other public agencies, for the prevention and treatment of alcohol abuse and alcoholism and for the rehabilitation of alcohol abusers and alcoholics.

Subpart E of these regulations would implement the statutory provision (section 504 of the act, 42 U.S.C. 4588) which authorizes grants to National Alcohol Research Centers for interdisciplinary research relating to alcoholism and other alcohol problems. Interim final regulations implementing this provision of the act were published only recently (April 4, 1978; 43 FR 14276). Therefore, subpart E of these regulations has been reserved and final regulations on National Alcohol Research Centers will be promulgated at a later date. However, the caption for part 54a which appears at the head of this notice has been revised to indicate that part 54a applies to National Alcohol Research Centers. In addition, subpart A (General) of these regulations has been revised to apply to National Alcohol Research Centers grants as well as formula and project grants.

DISCUSSION OF COMMENTS

STATE PLAN

A number of comments were received on the proposed requirements for content, submission, and review of the State plan.

Comment: One commenter, pointing out that in some States the Governor has designated certain departments or agencies to review and comment on the State plan on his behalf, recommended that § 54a.207(d) of the proposed regulations, which required review and comment by the Governor, be modified to accommodate such designation.

Response: § 54a.207(d) is revised to require that the State plan, any modifications thereof, and all assessments of progress be submitted to the Governor or the Governor's delegate for review and comment.

Comment: Another commenter, seeking to insure that State plans address the needs of rural areas, recommended that the State plan be required to refer to the rural-urban makeup of a State, where appropriate, and to the distribution of funds between rural and urban areas.

Response: § 54a.211 of the proposed regulations required the State plan to set forth (1) a survey of need which includes the extent of alcohol abuse and alcoholism problems in various population groups or areas of the State; and (2) priorities for the distribution of facilities and services in all geographic areas and subareas of the State. The Secretary intends these requirements to encourage appropriate attention to the special needs of different geographic areas. No change is made in the regulations.

Comment: One commenter suggested that State plans be required to address only the use of Federal formula grant funds.

Response: The legislative history of the act clearly indicates the intent of Congress that State plans address all resources for the development of alcoholism services and programs within the State and not simply the use of formula grant funds. No change is made in the regulations.

Comment: One commenter suggested that § 54a.207(c), which requires State agencies to submit periodic reports assessing the progress of the State in implementing its State plan, be modified to assure that the planning and reporting formats on the National Institute on Drug Abuse (NIDA) and the National Institute on Alcohol Abuse and Alcoholism (NIAAA) are compatible.

Response: § 54a.207(c) simply sets forth the requirements of section 303(c) of the act. These requirements pertain only to the State alcohol plan. Therefore, no change is made in the regulations. It should be noted, however, that NIAAA and NIDA are currently engaged in a variety of efforts to coordinate their data systems and planning requirements and make them more compatible.

Comment: One commenter protested that § 54a.209(b) of the proposed regulations, which required the State plan to identify officials heading each area of responsibility in the State agency (if the State agency administers programs in addition to the alcohol abuse and alcoholism program), appeared to require that alcohol, drug abuse, and/or other programs administered by the State agency each be directed by a separate individual.

Response: § 54a.209(b) has been revised to delete any such implication, which was not intended. As set forth below, § 54a.209(b) requires identification of each program for which the State agency is responsible and of the unit and official responsible for the al-

cohol abuse and alcoholism program. In addition, this subsection was revised to require establishment of policies and procedures for insuring that separate records are maintained with respect to the alcohol abuse and alcoholism program (rather than "each program," as provided by the proposed regulations).

Comment: One commenter stated that some local governments are not currently capable of meeting the requirements of § 54a.211 for detailed data on need and resources for alcohol abuse and alcoholism programs. The commenter, therefore, suggested that, if § 54a.211 is adopted, it go into effect over a period of 1 to 2 years.

Response: § 54a.211(a) imposes requirements on State agencies, not local governments. It implements section 303(a)(4)(A) of the act, which requires that each State plan set forth (in accordance with criteria established by the Secretary) a survey of need for the prevention and treatment of alcohol abuse and alcoholism. Most States conducted this base-line survey of need in 1972, prior to and as a condition of receiving their first alcohol formula grant. The surveys were conducted in accordance with guidelines issued at that time by the National Institute on Alcohol Abuse and Alcoholism. Since 1972, many States have significantly increased their ability to gather and analyze data. The Secretary believes, therefore, that the requirements of § 54a.211(a) do not impose undue burdens on the States, particularly since there is no requirement that the survey of need be updated periodically (except as the State agency finds necessary). However, in an effort to simplify the requirements set forth in § 54a.211(a) of the proposed regulations, § 54a.211(a)(2)(i) has been revised by deleting some of the data elements originally proposed (i.e., underemployment rates, housing conditions, and geographical factors).

The Secretary notes, in addition, that Pub. L. 94-371, enacted in 1976, amended the act to require (at section 303(a)(4)(B)) that the State survey of need include identification of the need for prevention and treatment of alcohol abuse and alcoholism by women and by individuals under the age of 18. The Secretary has no authority to revise those portions of § 54a.211(a) implementing these requirements. State agencies were required to address the needs of women and young people in updating their State plan for fiscal year 1977.

§ 54a.211(b)(1) implements section 303(a)(11) of the act, which specifically requires that each State plan contain, to the extent feasible, a complete inventory of all public and private resources available in the State for the purpose of alcohol abuse and alcoholism prevention, treatment, and rehabilitation. Accordingly, the Secretary has no authority to modify this requirement.

The requirements of § 54a.211(b)(2)-(5) are similar to those of the guidelines for preparation of the State plan issued in 1972. States were able to respond to these requirements at that time and have increased their ability to do so in the intervening years. The Secretary believes, therefore, that the requirements of § 54a.211(b)(2)-(5) for data on resources do not impose undue burdens on the States. No change is made in the regulations.

Comment: Another commenter suggested that § 54a.211(d) of the proposed regulations be revised to require that the State plan set forth attainable objectives, stated in measurable terms.

Response: § 54a.211(d) of the proposed regulations requires the State plan to (1) describe the steps necessary to secure and develop the resources needed to meet identified needs, (2) set forth priorities for the development and distribution of facilities and services throughout the State, (3) set forth (in the order of priority established) the additional projects and programs required, the estimated costs of each, and the sources of financial and other resources expected to support each project or program, and (4) include a timetable for completing all such projects and programs. The Secretary intends these requirements to encompass the development of attainable objectives, stated in measurable terms.

Comment: One commenter suggested that § 54a.211 be modified to encourage State agency attention to legislation, regulations, development of standards, and cooperative efforts with other agencies and programs (areas in which the commenter believes State alcoholism programs have "the greatest potential for growth and action") rather than simply to increasing financial resources and physical facilities. The commenter expressed the view that greater emphasis on less "materialistic" goals would acknowledge fluctuations in State economies, encourage sharper definition of issues which precipitate a lack of resources, and nurture long-range changes in value systems "far more important" than current material needs.

Response: The Secretary agrees that the activities urged by the commenter are appropriate, productive, and important aspects of a State agency's responsibility and has encouraged the establishment of such priorities. Since 1972, many States have listed activities such as adoption of the Uniform Alcoholism and Intoxication Treatment Act, revision of State laws regulating health insurance coverage and benefits, earmarking revenues from State alcohol taxes to support alcoholism treatment programs, and development of standards for accreditation and licensure among the priorities they set forth in the action plan required by § 54a.211(d). The Secretary anticipates that these and similar efforts will continue to be among the priorities set by State alcohol agencies in the future. However, since the proposed regulations clearly do not preclude reference to such activities, no change is made in the regulations.

ROLE OF LOCAL GOVERNMENTS IN PLANNING PROCESS

One commenter suggested a number of revisions to the proposed regulations to emphasize the role of local general purpose governments in developing alcohol prevention and treatment programs.

Comment: The commenter suggested revision of § 54a.208(b)(2)(ii) of the proposed regulations to require that elected chief executives of local general purpose governments (or their representatives) be given an opportunity to review project and program proposals developed or reviewed by the State agency.

Response: § 54a.208(b)(2)(ii) of the proposed regulations required the State agency to insure that agencies or authorities with interests or responsibilities related to project and program proposals developed or reviewed by the State agency have been afforded an opportunity to review the proposals. The Secretary notes that many public and private agencies and authorities, including elected chief executives of local general purpose governments, may have interests or responsibilities related to particular proposals developed or reviewed by the State agency. However, to specify that certain agencies and authorities must be given an opportunity to review all proposals developed or reviewed by the State agency would be to make the process of review and consultation even more complex and time-consuming, without countervailing benefit.

The Secretary notes further that proposed uses of funds appropriated under the act must be reviewed and approved or disapproved by local health systems agencies as required by section 1513 of the Public Health Service Act (42 U.S.C. 300l-2). The Secretary has recently removed limitations on the number of public elected officials serving on the governing bodies of health systems agencies (43 FR 1253) and expects, as a result, expanded participation on the part of elected chief executives of local general purpose governments in the review and approval or disapproval by health systems agencies of a wide variety of federally funded health programs, includ-

ing those authorized by the Comprehensive Alcohol Abuse and Alcoholism Prevention, Treatment, and Rehabilitation Act. Therefore, no change is made in the regulations.

Comment: The commenter also suggested revision of § 54a.208(b)(3) of the proposed regulations to require establishment of sub-State planning regions and the participation of elected local chief executives in the sub-State planning process.

Response: § 54a.208(b)(3) of the proposed regulations implemented section 303(a)(12) of the act, which requires the State plan to provide assurance that the State agency will coordinate its planning with local alcoholism and alcohol abuse planning agencies and with other State and local health planning agencies. The act does not require the establishment of sub-State areas for planning alcohol abuse and alcoholism programs. However, the Secretary has encouraged States to designate such areas and (in order to encourage the integration of alcohol abuse and alcoholism services into existing health and social service delivery systems) to designate, whenever possible, areas already in use for related planning purposes. Many States have done so. However, the size and nature of such areas vary from State to State, depending on needs and practice in the State. In view of different approaches to the organization of political subdivisions in different States, the Secretary believes it preferable not to specify the precise manner in which States are to coordinate their planning for alcohol abuse services and programs with local agencies but simply to require that such coordination be achieved. No change is made in the regulations.

Comment: The commenter further suggested that § 54a.211(d)(3) be revised to require that the State plan document shows how State priorities compare to those set by sub-State planning areas, explain any differences, and provide a process for appeal of the State's decision.

Response: § 54a.211(d)(3) of the proposed regulations required the State agency to establish priorities for the distribution of facilities and services in all geographic areas and sub-areas of the State. The Secretary notes that Federal formula grants are awarded to assist States in planning, establishing, maintaining, coordinating, and evaluating alcohol abuse and alcoholism programs. The Secretary expects and encourages these responsibilities to be carried out with sensitive attention to the perceived needs of sub-State areas. (Indeed, as noted above, section 303(a)(12) of the act requires the State agency to provide assurance that it will coordinate its planning with local alcoholism and alcohol abuse planning agencies and with other State and local health planning agencies.)

However, as the recipient of Federal funds, it is the State agency which, consistent with the act and the regulations below, must actually establish priorities for the distribution of facilities and services. Procedures for doing so vary from State to State. In some, Federal and/or State alcohol funds are allocated to sub-State areas by formula, for use as set forth in a sub-State plan for alcohol abuse and alcoholism programs approved by the State agency.

The Secretary wishes to reiterate his conviction that development and implementation of these and other specific procedures for coordination and allocation of alcohol funds within a State are more appropriately the province of State than Federal government. Therefore, no change is made in the regulations.

ADVISORY COUNCIL MEMBERSHIP

Comment: Two commenters, noting that in many States the membership of the State Alcohol Abuse Advisory Council is established by State statute, pointed out that § 54a.210(b)(iv) of the proposed regulations, which require that at least one representative of the Statewide Health Coordinating Council (SHCC) established under section 1524 of the Public Health Service Act (42 U.S.C. 300m-3) be appointed to membership on the Alcohol Abuse Advisory Council, may require changes in State law. One of them recommended that States be allowed time to seek whatever changes in State law may be necessary to comply with § 54a.210(b)(iv).

Response: Section 303(3) of the act requires that the State Alcohol Abuse Advisory Council include at least one representative of the SHCC. The Secretary has no authority to modify this requirement.

Comment: The same commenters expressed a preference for achieving coordination between the SHCC and the State Alcohol Abuse Advisory Council by appointing a member of this Council (or another individual knowledgeable about alcohol abuse and alcoholism) to the SHCC.

Response: The Secretary has no authority under the act to require appointment of a member of the State Alcohol Abuse Advisory Council to the SHCC. However, persons knowledgeable about alcohol abuse and alcoholism can be and in some States have been appointed to the SHCC by the Governor under section 1524 of the Public Health Service Act (42 U.S.C. 300m-3). It should be noted, in addition, that a SHCC member appointed to the State Alcohol Abuse Advisory Council, if not previously knowledgeable about alcoholism, will develop such knowledge through participation in the Council's activities.

Comment: Another commenter suggested the proposed regulations be revised to require that rural population groups be represented on the State Alcohol Abuse Advisory Council.

Response: § 54a.210 requires that the membership of the Council, to the extent practicable, be drawn from different geographical areas of the State. Therefore, no change is made in the regulations. However, guidelines on composition of the Council (available from the National Institute on Alcohol Abuse and Alcoholism) encourage "equitable" geographic representation.

Comment: Another commenter recommended that § 54a.210(b)(ii) of the proposed regulations, which listed examples of public agencies appropriate for membership on the State Alcohol Abuse Advisory Council, be modified to specifically include mayors (or their representatives).

Response: § 54a.210(b)(ii) has been modified to specifically mention elected chief executives of local general purpose governments (or their representatives) as appropriate members of the Council.

Comment: One commenter recommended that references to the National Council on Alcoholism and Alcoholics Anonymous be deleted from § 54a.210(b)(i) of the proposed regulations. (This section listed examples of nongovernmental organizations appropriate for membership on the State Alcohol Abuse Advisory Council.) The commenter stated that the proposed wording singles out and gives favorable special attention to one specific nongovernmental agency (i.e., the National Council on Alcoholism) and calls for violation of the anonymity of individual members of Alcoholics Anonymous.

Response: References to the National Council on Alcoholism and Alcoholics Anonymous have been deleted from § 54a.210(b)(i).

MAINTENANCE OF EFFORT

Comment: One commenter urged that reference to "local" and "other non-Federal" funds be deleted from § 54a.215(a) of the proposed regulations. (§ 54.215(a) set forth a method for use by the Secretary in determining if a State is in substantial compliance with section 303(a)(9) of the Act, which requires maintenance of effort.) The commenter argued that States, and particularly State alcohol agencies, do not control local and other non-Federal programs nor their funding, that it is therefore unrealistic to hold States responsible for decline or cessation of these funds, and that § 54a.215(a) goes beyond the intent of the Act.

Response: Section 303(a)(9) of the Act requires State plans to provide reasonable assurance that formula grant funds will be used to supplement and increase (to the extent feasible and practical) the level of State, local, and other non-Federal funds that would in the absence of formula grant funds be made available for programs for the prevention and treatment of alcohol abuse and alcoholism and the rehabilitation of alcohol abusers and alcoholics. The Act further requires State plans to provide assurance that Federal formula grant funds will in no event supplant State, local, and other non-Federal funds. The Secretary, therefore, has no authority to delete from this section of the regulations references to local and other non-Federal expenditures.

REALLOTMENTS TO STATES

Comment: One commenter recommended deletion of the requirement in § 54a.204(d) of the proposed regulations that each State annually report the need, if any, for additional funds, and its plans for meeting such need if additional funds are made available through reallotment. The commenter stated that (given anticipated funding levels for alcohol formula grants) reallotment of funds among States is unlikely in the foreseeable future.

Response: Section 302(b) of the Act authorizes reallotment of formula grant funds unobligated by the States to which they were originally allotted to other States which have need of them. Therefore, regardless of anticipated funding levels, it is necessary for the Secretary to establish a mechanism for determining (1) if funds allotted to any of the States remain unobligated after a period of time, and (2) if other States have need of additional funds and plans for meeting such needs if additional funds are made available through reallotment. No change is made in the regulations.

ADMINISTRATIVE EXPENDITURES

Comment: Two commenters protested the limitation on expenditures for administration of the State plan set forth in § 54a.205 of the proposed regulations. One commenter urged the limitation be raised to $75,000 annually; the other proposed that certain expenditures for "operations" beyond the current limitation be deemed allowable.

Response: Section 302(c) of the Act requires that not more than 10 percent of a State's formula grant or $50,000, whichever is less, be available annually for administration of the State plan. The Secretary, therefore, has no authority to increase the amount allowable for administrative expenditures. However, alcohol formula grant funds can be used to meet program costs such as planning, technical assistance, evaluation, and coordination in addition to administrative costs, if it is the State's policy to consistently treat such costs as planning, technical assistance, evaluation, and coordination as program costs (rather than administative costs).

Comment: One commenter urged deletion of those administrative costs listed as unallowable in subsections (1) through (4) of § 54a.205(c) of the proposed regulations. The commenter expressed the view that holding these costs unallowable is inconsistent with the provisions of § 54a.205(b) of the proposed regulations, which set forth allowable administrative costs, and more restrictive than the requirements of section 302(c) of the Act.

Response: The Secretary finds the provisions of § 54a.205(c)(1)-(3) of the proposed regulations clearly consistent with section 302(c) of the Act and the provisions of § 54a.205(c)(4) clearly consistent with section 303(a)(9) of the Act and § 54a.215(a) of the proposed regulations. Therefore, no change is made in § 54a.205(c). However, § 54a.205(b) has been revised to emphasize that administrative costs are allowable only if, in addition to being in accordance with the principles set forth in 45 CFR Part 74 and the regulations below, they total not more than 10 percent of a State's formula grant annually or $50,000, whichever is less.

PROJECT GRANTS

Comment: One commenter recommended the Secretary revise Subpart D of the proposed regulations to require that proposed project grants be consistent with the State plan.

Response: Section 311(c)(2)(A) of the Act requires each applicant for a project grant for prevention or treatement of alcohol abuse and alcoholism to submit a copy of its application to the State agency for review. This section further requires the State agency be given not more than 30 days from receipt of the application to submit to the Secretary, in writing, an evaluation of the proposed project. Such evaluation is to include comments on the relationship of the proposed project to the State plan. The Secretary has no authority to require the State agency to submit comments on proposed projects, if it does not wish to do so. However, given the discretionary nature of the grants authorized by section 311 of the Act, the Secretary does have implied authority to impose regulatory requirements which are reasonably related to the purposes of these grants. Indeed, as a matter both of policy and practice, the Secretary has required that proposed projects for the prevention and treatment of alcohol abuse and alcoholism be consistent with the State alcohol plan. Therefore, § 54a.405 of the final regulations set forth below has been revised to make this requirement explicit.

Comment: One commenter suggested that § 54a.403 of the proposed regulations (now § 54a.402), which set forth the types of projects eligible for grants under section 311 of the Act, be expanded to give explicit emphasis to occupational alcoholism programs.

Response: The Secretary notes with satisfaction the commenter's interest in occupational alcoholism programs, which provide an opportunity for early identification of and intervention in alcohol problems. However, § 54a.402 is intended to be a broad general listing of eligible types of projects (for example, projects which demonstrate innovative approaches to prevention and treatment). Each of the categories listed is potentially inclusive of occupational alcoholism programs. Therefore, no change is made in the regulations.

Comment: One commenter suggested clarification of § 54a.405(g) of the proposed regulations (now § 54a.404(g)), which required grant applications to describe how the proposed project will serve or support the provision of services to a particular community, area, or population group. The commenter felt the proposed language could be interpreted as permitting a program to refuse admission to "difficult cases."

Response: § 54a.405(g) of the proposed regulations was intended to elicit from grant applicants a description of how the proposed project will meet or help meet the need for services identified in the application (in response to the requirements of § 54a.405(f) of the proposed regulations). It has no reference to admission or referral policies. Therefore, no change is made in this section of the regulations. However, the general concern of the commenter is addressed by the revision to § 54a.405(k) described below.

Comment: One commenter expressed concern at the absence of an explicit requirement that proposed treatment projects provide "continuity of care" through appropriate affiliation and referral.

Response: The Secretary believed it implicit in the proposed regulations that treatment projects are to provide or insure the provision of continuity of care. However, § 54a.405(k) of the proposed regulations (now § 54a.404(k)) has been revised to make it explicit. As set forth below, § 54a.404(k) requires grant applications to describe the extent to which the proposed project will utilize existing community resources to insure the provision of a continuum of appropriate care to the persons it serves. In addition, guidelines for alcoholism treatment pro-

grams (available from the National Institute on Alcohol Abuse and Alcoholism) encourage the establishment of an appropriate referral system and development of cooperative agreements with other agencies.

Comment: One commenter recommended that § 54a.405(1) of the proposed regulations (now § 54a.404(1)) be revised to require that applications for alcohol treatment and prevention projects under section 311 of the Act document that city and county health agencies have been notified of the proposed project.

Response: Section 54a.405(1) required that treatment and prevention grant applications (1) describe how the propose project will be integrated with and involve the active participation of a wide range of public and nongovernmental agencies, organizations, institutions, and individuals, and (2) specify how such agencies, organizations, institutions, and individuals have been given an opportunity to participate in the development of the proposed project and will be given an opportunity to participate in its implementation and evaluation. The Secretary points out this requirement goes far beyond simple notification of appropriate parties (whether documented or not) and believes it sufficient to encourage grant applicants to solicit the active participation of city and county health agencies (as appropriate) in the development, implementation, and evaluation of prevention and treatment projects. The Secretary notes again that proposed uses of funds appropriated under the Comprehensive Alcohol Abuse and Alcoholism Prevention, Treatment, and Rehabilitation Act must be reviewed and approved or disapproved by local health systems agencies under section 1513 of the Public Health Service Act (42 U.S.C. 300*l*-2) and points out that the governing bodies of these agencies must include representatives of public and private agencies in the area concerned with health. Therefore, no change is made in the regulations.

Comment: One commenter, noting that third-party reimbursement for the cost of alcoholism services is not yet widely available, stated that only a minority of grant applicants can respond in realistic terms to the requirement of § 54a.405(o) of the proposed regulations (now § 54a.404(o)) that grant applications describe how the proposed project will become self-sufficient.

Response: The Secretary notes that public and private third-party financing for alcoholism treatment has increased over the last few years and that the efforts of local alcoholism programs to secure non-Federal funds have been a factor in bringing about this increase. It is true, nonetheless, that third-party reimbursement for alcoholism services is not expanding as rapidly as originally anticipated. For this reason, the Secretary has decided (effective through fiscal year 1979) not to specify the level of non-Federal funding which recipients of grants under section 311 must secure each year. Therefore, § 54a.412 of the proposed regulations (matching rates) has been deleted.[1] In the meantime, the Department will complete a series of studies of the ability of alcoholism treatment programs to collect third-party payments in adequate amounts. The Secretary anticipates the results of these studies will guide the development of departmental policy and regulations on this topic in the future.

However, the requirement of § 54a.405(o) of the proposed regulations has not been revised. The Secretary believes that requiring grant applicants to describe how a proposed project will become self-sufficient stimulates the effort necessary if the proposed project is to establish eligibility for and collect those third-party payments which are available and encourages the integration of the proposed project into existing health and social service delivery systems.

NONDISCRIMINATION

Comment: Two commenters said it was "imperative" that the requirements of § 54a.214 be more explicitly stated. This section of the proposed regulations requires the State plan to provide that the State agency will (1) review admissions to private and public general hospitals and outpatient facilities to assist the Secretary in determining the compliance of such facilities with section 321 of the Act (which prohibits discrimination against alcohol abusers and alcoholics, solely because of their alcohol abuse or alcoholism, in admission or treatment by hospitals and outpatient facilities), and (2) make periodic reports to the Secretary respecting such review. Both commenters expressed concern about the heavy workload these requirements could impose on State alcohol agencies. One requested that the terms "review" and "periodic" be defined. The other suggested the Department make available funds for carrying out the required activities.

Response: As indicated by the commenter, § 54a.214 of the proposed regulations does not set forth explicit requirements but simply repeats the language of section 303(a)(15) of the Act. At the time the proposed regulations were published, it was anticipated that regulations implementing section 321 of the Act (then under development by the Department's Office for Civil Rights) would provide more detailed guidance to State alcohol agencies on their responsibilities under section 303(a)(15). On May 4, 1977, regulations implementing section 321 were published in the FEDERAL REGISTER (42 FR 22676) as part of the regulations implementing section 504 of the Rehabilitation Act of 1973 (45 CFR Part 84). These regulations require that no otherwise qualified handicapped individual shall, solely by reason of his handicap, be excluded from participation in, be denied the benefits of, or be subjected to discrimination under any program or activity receiving financial assistance from the Department. However, the enforcement procedures set forth in appendix B of these regulations (which are identical to the procedures employed by the Department for enforcing title VI of the Civil Rights Act of 1974) do not provide an explicit role for State agencies.

In view of the fact that section 303(a)(15) of the Act makes review of and reporting on admissions to hospitals and outpatient facilities by the State alcohol agency a condition of the receipt of alcohol formula grant funds and that public comments have indicated detailed guidance in carrying out these responsibilities is "urgently needed," the Secretary intends to issue a notice of proposed rulemaking on this matter (consistent with the requirements of 45 CFR Part 84) in the near future.

OTHER

CRITERIA FOR STANDARDS

Section 303(a)(10) of the Act requires the State plan to set forth, in accordance with criteria to be set by the Secretary, standards (including enforcement procedures and penalties) for (A) construction and licensing of public and private treatment facilities, and (B) for other community services or resources available to assist individuals to meet problems resulting from alcohol abuse. Section 54a.212 of the proposed regulations, intended to implement this requirement of the Act, was reserved from the proposed regulations, with a special note inviting comments and suggestions on the scope and content of the criteria. No comments or suggestions were received. The Secretary continues to encourage the submission of comments or suggestions from the public on criteria for standards for alcohol abuse and alcoholism programs, services, and facilities. However, in view of the lack of public comments to date, § 54a.212 is also reserved from the final regulations set forth below.

[1] Sec. 54a.412 of the proposed regulations had been reserved for a separate notice of proposed rulemaking specifying required non-Federal matching rates.

TECHNICAL REVISIONS

Section 54a.101 has been revised to apply to grants for National Alcohol Research Centers as well as to formula grants, project grants, and special grants for implementation of the Uniform Alcoholism and Intoxication Treatment Act.

Section 54a.102 has been revised to include definitions for "Council," "nonprofit," "project period," and "budget period" which appeared as § 54a.402 of the proposed regulations. Section 54a.402 of the proposed regulations has been deleted.

Section 54a.103 has been revised to call attention to the nondiscrimination requirements of section 303 of the Age Discrimination Act of 1975 (42 U.S.C. 6102) and title IX of the Education Amendments of 1972 (20 U.S.C. 1681).

Section 54a.202(c) of the proposed regulations, which defined "treatment" of alcohol abuse problems, has been deleted, largely because the proposed regulaltions did not include a definition of "prevention" or of "rehabilitation," areas in which State alcohol agencies have statutory responsibilities comparable to their responsibilities in the area of treatment. It should be noted, however, that the absence of such definitions in no way diminishes the statutory responsibility of State alcohol agencies to plan, establish, maintain, coordinate, and evaluate projects for the development of more effective prevention, treatment, and rehabilitation programs to deal with alcohol abuse and alcoholism.

Section 54a.202(d) of the proposed regulations (now § 54a.202(c)) has been revised to define "population" with respect to the Virgin Islands, Puerto Rico, Guam, American Samoa, the Trust Territory of the Pacific Islands, and the Northern Mariana Islands as the latest figures of total population which are, in the judgment of the Secretary, satisfactory. This revision is necessary in order to avoid inappropriate reductions (or increases) in allotments to the islands in those years for which population figures certified by the Department of Commerce for these jurisdictions are many years older than those certified for other States.

Section 54a.203 has been revised to set forth the new formula for computing allotments to the States which was promulgated as § 54a.102 in the FEDERAL REGISTER of November 25, 1977 (42 FR 60403). In addition, the definitions of two terms in this formula have been revised for greater clarity. These revisions are editorial in nature and do not affect the substance of the regulations.

Section 54a.207(a), regarding submission of State plans, has been revised to implement section 303(a) of the act as amended by Pub. L. 95-83 (42 U.S.C. 4573(a)), enacted August 1, 1977, which requires that each State plan (1) pertain to the 12-month period of the State fiscal year which commences in the calendar year in which the plan is submitted, and (2) be submitted not later than July 31 of each calendar year.

Section 54a.208, setting forth the purpose of the State plan, has been revised to implement section 303(b) of the act as amended by Pub. L. 95-83 (42 U.S.C. 4573(b)), which specifically permits a State plan for prevention and treatment of alcohol abuse and alcoholism to also contain provisions relating to drug abuse or mental health.

Section 54a.102(g) has been revised to include the Northern Mariana Islands in the definition of the term "State." Section 54a.203(b) has been revised to include the Northern Mariana Islands among those jurisdictions for which special estimates of need and income may be used in calculating State allotments. Section 54a.203(c) has been revised to list the Northern Mariana Islands among the jurisdictions ineligible for a formula grant of at least $200,000. Section 54a.204 (a), (b), and (d), regarding transfer of allotments, have also been revised to refer to the Northern Mariana Islands. These revisions make the regulations consistent with Pub. L. 94-241 (48 U.S.C. 1681) which approves the covenant to establish a Commonwealth of the Northern Mariana Islands and makes the Comprehensive Alcohol Abuse and Alcoholism Prevention, Treatment, and Rehabilitation Act as amended applicable to the Northern Mariana Islands as it is applicable to Guam.

Section 54a.405(u) of the proposed regulations (now § 54a.404(u)) has been revised to require that all grant applications contain assurances that the applicant, if it receives a grant award, will undertake to develop and maintain such new and existing relationships or arrangements with community mental health centers and providers of alcohol services in its service area as are sufficient to assure the availability of mental health and alcohol services to the population it serves. The proposed regulations had required such assurances only from grant applicants which received assistance under the Community Mental Health Centers Act.

Section 54a.407 and § 54a.409(b) of the proposed regulations have been deleted. The provisions of § 54a.106, which make subpart F (Grant-Related Income) and subpart K (Grant Payment Requirements) of 45 CFR part 74 applicable to all organizations receiving alcohol prevention and treatment grants, make these sections unnecessary.

Section 54a.409(c) of the proposed regulations (now § 54a.407(b)) has been revised to require that audits meeting the standards prescribed in 45 CFR 74.61(h)(1) shall be conducted by all grantees. The proposed regulations would have imposed different audit requirements on nongovernmental grantees than on grantees which are State and local governments.

The subsections of subpart D of the regulations have been renumbered as necessary to accommodate deletions.

Accordingly, 42 CFR part 54a is revised to read as set forth below.

(Catalog of Federal Domestic Assistance Program Nos. 13.257 Alcohol Formula Grants, 13.252 Alcohol Demonstration Programs.)

NOTE.—The Department of Health, Education, and Welfare has determined that this document does not contain a major proposal requiring preparation of an inflation impact statement under Executive Order 11821 and OMB Circular A-107.

Dated: May 9, 1978.

JOYCE C. LASHOF,
Acting Assistant Secretary for Health.

Approved: September 1, 1978.

HALE CHAMPION,
Acting Secretary.

42 CFR Part 54a is revised to read as follows:

PART 54a—GRANTS FOR ALCOHOL ABUSE AND ALCOHOLISM PREVENTION, TREATMENT, AND REHABILITATION SERVICES AND NATIONAL ALCOHOL RESEARCH CENTERS

Subpart A—General

54a.101 Applicability.
54a.102 Defintions.
54a.103 Nondiscrimination.
54a.104 Confidentiality of patient records
54a.105 Reviews required by Health Planning and Resources Development Act.
54a.106 Applicability of 45 CFR Part 74.

Subpart B—Formula Grants to States

54a.201 Applicability.
54a.202 Definitions.
54a.203 Allotments to States.
54a.204 Transfer of allotments.
54a.205 Allotment; administrative expenditures.
54a.206 Allotment; equipment, supplies or personnel in lieu of cash.
54a.207 State plan; submission and review.
54a.208 State plan; purpose; coordination.
54a.209 State plan; single State agency.
54a.210 State plan; State advisory council.
54a.211 State plan; survey of need; resource allocation plan.
54a.212 State plan; criteria for construction and licensing of facilities. [Reserved]
54a.213 State plan; personnel administration.

54a.214 State plan; nondiscrimination by federally assisted private and public general hospitals and outpatient facilities in the admission and treatment of alcohol abusers.
54a.215 Assurances.

Subpart C—Special Grants for Implementation of the Uniform Alcoholism and Intoxication Treatment Act [Reserved]

Subpart D—Project Grants for the Prevention and Treatment of Alcohol Abuse and Alcoholism

54a.401 Applicability.
54a.402 Eligibility.
54a.403 Application.
54a.404 Project requirements.
54a.405 Evaluation and grant award.
54a.406 Expenditure of grant funds.
54a.407 Grantee accountability.
54a.408 Publications and copyrights.
54a.409 Additional conditions.

Subpart E—Grants for National Alcohol Research Centers [Reserved]

Subpart A—General

AUTHORITY: 42 U.S.C. 4551, 4571-4573, 4576-4577, "and 4588."

§ 54a.101 Applicability.

The provisions of this subpart apply to all grants which are authorized by title III of the Comprehensive Alcohol Abuse and Alcoholism Prevention, Treatment, and Rehabilitation Act of 1970 as amended by Pub. L. 93-282 and Pub. L. 94-371 (42 U.S.C. 4571, et seq.), and administered by the National Institute on Alcohol Abuse and Alcoholism under the authority granted by title I of that Act (42 U.S.C. 4551, et seq.). Those grants include: (a) formula grants to assist States in planning, establishing, maintaining, coordinating, and evaluating projects for the development of more effective prevention, treatment, and rehabilitation programs to deal with alcohol abuse and alcoholism (42 U.S.C. 4571-4573; Subpart B of this part); (b) special grants to assist States in implementing the Uniform Alcoholism and Intoxication Treatment Act (42 U.S.C. 4576; Subpart C of this part); (c) grants for alcohol abuse and alcoholism prevention and treatment projects (42 U.S.C. 4577; Subpart D of this part) "; and (d) grants for National Alcohol Research Centers (42 U.S.C. 4588; Subpart E of this part)."

§ 54a.102 Definitions.

As used in this part:

(a) "Act" means the Comprehensive Alcohol Abuse and Alcoholism Prevention, Treatment, and Rehabilitation Act of 1970, as amended (42 U.S.C. 4541, et seq.).

(b) "Council" means the National Advisory Council on Alcohol Abuse and Alcoholism established pursuant to section 217 of the Public Health Service Act (42 U.S.C. 218).

(c) "Nonprofit" as applied to a private entity means that no part of the net earnings of such entity inures or may lawfully inure to the benefit of any shareholder or individual.

(d) "Project period" means the total period of time for which support for a project has been recommended as specified in the grant award document. Such recommendation does not commit or obligate the Federal Government to any addition, supplemental or continuation support beyond the current budget period.

(e) "Budget period" means the interval of time (usually 12 months) into which the project period has been divided for budgetary and reporting purposes and for which the Government has made a financial commitment to fund a particular project.

(f) "Secretary" means the Secretary of Health, Education, and Welfare and any other officer or employee of the Department of Health, Education, and Welfare to whom the authority involved may be delegated.

(g) "State" means the 50 States, the District of Columbia, the Virgin Islands, the Commonwealth of Puerto Rico, Guam, American Samoa, the Trust Territory of the Pacific Islands, and the Northern Mariana Islands.

§ 54a.103 Nondiscrimination.

(a) *Race, color, national origin.* Attention is called to the requirements of title VI of the Civil Rights Act of 1964 (42 U.S.C. 2000d et seq.) which provides that no person in the United States shall, on the ground of race, color, or national origin be excluded from participation in, be denied the benefits of, or be subjected to discrimination under any program or activity receiving Federal financial assistance. A regulation implementing such title has been promulgated (45 CFR Part 80).

(b) *Age.* Attention is called to the requirements of section 303 of the Age Discrimination Act of 1975 (42 U.S.C. 6102). That section provides that pursuant to regulations which shall be effective no earlier than January 1, 1979, no person in the United States shall, on the basis of age, be excluded from participation in, be denied the benefits of, or be subjected to discrimination under any program or activity receiving Federal financial assistance, except as provided by sections 304(b) and 304(c) of the Age Discrimination Act of 1975 (42 U.S.C. 6103 (b) and (c)).

(c) *Sex.* Attention is called to the requirements of title IX of the Education Amendments of 1972 and in particular to section 901 of such act (20 U.S.C. 1681) which provides that no person in the United States shall, on the basis of sex, be excluded from participation in, be denied the benefits of, or be subjected to discrimination under any education program or activity receiving Federal financial assistance. A regulation implementing such section has been promulgated (45 CFR Part 86).

(d) *Handicapped individuals.* Attention is called to the requirements of section 504 of the Rehabilitation Act of 1973, as amended (29 U.S.C. 794), which provides that no otherwise qualified handicapped individual in the United States shall, solely by reason of his or her handicap, be excluded from participation in, be denied the benefits of, or be subjected to discrimination under any program or activity receiving Federal financial assistance. A regulation implementing such section has been promulgated (45 CFR Part 84).

(e) *Admission of alcohol abusers to federally assisted private and public general hospitals and outpatient facilities.* Attention is called to the requirements of section 321 of the act (42 U.S.C. 4581) which provides that alcohol abusers and alcoholics who are suffering from medical conditions shall not be discriminated against in admission or treatment, solely because of their alcohol abuse or alcoholism, by any private or public general hospital or outpatient facility (as defined in section 1833(6) of the Public Health Service Act, 42 U.S.C. 300s-3(6)) which receives support in any form from any program supported in whole or in part by funds appropriated to any Federal department or agency. A regulation implementing such section has been promulgated (45 CFR § 84.53).

§ 54a.104 Confidentiality of patient records.

Attention is called to section 333 of the act (42 U.S.C. 4582) which provides that records of the identity, diagnosis, prognosis, or treatment of any patient which are maintained in connection with the performance of any program or activity relating to alcoholism or alcohol abuse education, training, treatment, rehabilitation or research, which is conducted, regulated, or directly or indirectly assisted by any department or agency of the United States, shall be confidential and may be disclosed only for the purposes and under the circumstances expressly authorized under section 333 of the act. Violations of section 333 are subject to a fine of not more than $500 in the case of a first offense and not more than $5,000 in the case of each subsequent offense. A regulation implementing section 333 of the act has been promulgated (42 CFR Part 2).

§ 54a.105 Reviews required by Health Planning and Resources Development Act.

Attention is called to section 1524(c)(6) of the Public Health Service Act (42 U.S.C. 300m-3(c)(6)) which requires that the Statewide Health Coordinating Council, if any, established under section 1524 annually review and approve or disapprove the alcohol abuse and alcoholism State plan and any application for alcohol formula grant funds submitted to the Secretary. Attention is also called to section 1513(e)(1)(A) of the Public Health Service Act (42 U.S.C. 300l-2(e)(1)(A)) which requires that the Health Systems Agency, if any, established under section 1513 review and approve or disapprove each proposed use within its health service area of Federal funds for the development, expansion, or support of health resources which are made available through project grants for the prevention and treatment of alcohol abuse and alcoholism and through special grants for implementation of the Uniform Alcoholism and Intoxication Treatment Act and Federal funds made available through grants and contracts by the State from alcohol abuse and alcoholism formula grants. Attention is also called to section 1536 (42 U.S.C. 300n-5), which authorizes the State Health Planning and Development Agency to perform this review under section 1513(e)(1)(A) in those States where health service areas will not be established and health systems agencies will not be designated.

§ 54a.106 Applicability of 45 CFR Part 74.

The relevant provisions of 45 CFR part 74, establishing uniform administrative requirements and cost principles, shall apply to all grants under this part to State and local governments as those terms are defined in subpart A of that part 74; the relevant provisions of the following subparts of part 74 shall also apply to grants to all other grantee organizations under subpart D of this part:

45 CFR PART 74

Subpart
A. General.
B. Cash Depositories.
C. Bonding and Insurance.
D. Retention and Custodial Requirements for Records.
F. Grant-Related Income.
G. Matching and Cost Sharing.
K. Grant Payment Requirements.
L. Budget Revision Procedures.
M. Grant Closeout, Suspension and Termination.
O. Property.
Q. Cost Principles.

Subpart B—Formula Grants to States

AUTHORITY: 42 U.S.C. 4571-4573.

§ 54a.201 Applicability.

This subpart applies only to grants under sections 301-303 of the Act (42 U.S.C. 4571-4573) to assist States in planning, establishing, maintaining, coordinating, and evaluating projects for the development of more effective prevention, treatment, and rehabilitation programs to deal with alcohol abuse and alcoholism.

§ 54a.202 Definitions.

All terms not defined herein shall have the same meaning as given them in § 54a.102. As used in this subpart:

(a) "State agency" means the single State agency, which may be an individual agency or an interdepartmental agency, designated pursuant to section 303(a)(1) of the act as the sole agency for the administration of the State plan or for supervising the administration of the State plan.

(b) "State plan" means the document for planning, establishing, conducting, coordinating, and evaluating projects for the development of more effective prevention, treatment, and rehabilitation programs within the State to deal with alcohol abuse and alcoholism, which contains the information, proposals, and assurances required by section 303 of the act and the regulations of this subpart.

(c) "Population", with respect to any State or area thereof other than the Virgin Islands, the Commonwealth of Puerto Rico, Guam, American Samoa, the Trust Territory of the Pacific Islands, and the Northern Mariana Islands, means the latest figures of total population certified by the United States Department of Commerce. With respect to the Virgin Islands, the Commonwealth of Puerto Rico, Guam, American Samoa, the Trust Territory of the Pacific Islands, and the Northern Mariana Islands, "population" means the latest figures of total population which are, in the judgment of the Secretary, satisfactory.

§ 54a.203 Allotments to States.

(a) The allotments to the several States under section 302 of the Comprehensive Alcohol Abuse and Alcoholism Prevention, Treatment, and Rehabilitation Act will be computed by the Secretary as follows:

State allotment=Population of State×Total funds appropriated×Population of U.S.

(1 Per capita income of U.S. (3-year average)/2 Per capita income of State (3-year average)+1 Need in State/2 Need in U.S.)

The term Need in State means an estimate of the level of alcohol abuse based on application of the results of multivariate statistical analysis of survey data on alcohol abuse to data on the demographic characteristics of each State.

The term Need in U.S. is the quotient of the following calculation:

Population of State×Need in State, totaled for 50 States and D.C./Total population of 50 States and D.C.

(b) In making the calculation specified in paragraph (a) of this section for Puerto Rico, the Virgin Islands, American Samoa, Guam (Delete "and"), the Trust Territory of the Pacific Islands, and the Northern Mariana Islands, the Secretary, in the absence of income data and estimates of need specific to these areas which are, in his judgment, satisfactory, will use the highest estimate of Need in State and the highest estimate of:

Per capita income of U.S. (3-year average)/Per capita income of State (3-year average)

(c) In any fiscal year for which the amount appropriated under section 301 of the act is equal to or greater than the amount appropriated for the fiscal year ending June 30, 1976, if, after determining the amount of the allotment for each State in accordance with paragraph (a) of this section, it appears that any State (with the exception of the Virgin Islands, American Samoa, Guam (Delete "and"), the Trust Territory of the Pacific Islands (Delete ")") Add ", and the Northern Mariana Islands)" will receive less than $200,000, the Secretary shall reduce the shares of each State which would receive more than $200,000 by an equal percentage and reallocate these sums as required to assure that every State (other than the Virgin Islands, American Samoa, Guam (Delete "and"), the Trust Territory of the Pacific Islands (Delete ")") Add ", and the Northern Mariana Islands)" will receive at least $200,000.

(d) Allotments to States computed pursuant to paragraphs (a), (b), and (c) of this section shall be adjusted so that the total allotment to any State will not be less than the amount allotted to it for the fiscal year ending June 30, 1976.

(e) In any fiscal year for which the amount appropriated under section 301 of the act is less than the amount appropriated for the fiscal year ending 1976, the minimum allotment to a State shall be an amount which bears the same ratio to the amount allotted for the fiscal year ending June 30, 1976, as the amount appropriated for the fiscal year for which the allotment is being made bears to the amount appropriated for the fiscal year ending June 30, 1976.

(f) If the amount appropriated under section 301 of the act for any fiscal year is less than the amount required to make for such fiscal year the minimum allotments prescribed by paragraphs (c), (d), and (e) of this section to each State with an approved State plan, the minimum allotment for such fiscal year for a State with an

approved State plan shall be an amount which bears the same ratio to the minimum allotment prescribed by paragraph (c), (d), or (e), as appropriate, for such State as the amount appropriated for such fiscal year bears to the amount of appropriations which would be required to make the minimum allotments to each State with an approved State plan under paragraphs (c), (d), or (e), as appropriate.

§ 54a.204 Transfer of allotments.

(a) *Allotments to the 50 States, the District of Columbia, and the Commonwealth of Puerto Rico.* Any amount allotted to a State in a fiscal year (other than the Virgin Islands, American Samoa, Guam, the Trust Territory of the Pacific Islands, and the Northern Mariana Islands) which is unobligated at the end of that year shall remain available to the State, for the purposes for which made, for the next fiscal year (and for such year only), and that amount shall be in addition to the amounts allotted to the State for that purpose for the next fiscal year; except that any amount, remaining unobligated at the end of the sixth month following the end of the year in which it was allotted, which the Secretary determines will remain unobligated by the close of the next fiscal year, may be reallotted by the Secretary to any other of the States having need therefor, on such basis as the Secretary deems equitable and consistent with the purposes of the act and the regulations of this subpart. Funds thus reallotted to any of the States shall be available for the purposes for which made until the close of such next fiscal year and shall be in addition to the amounts allotted and available for the same period.

(b) *Allotments to the Virgin Islands, American Samoa, Guam, the Trust Territory of the Pacific Islands , and the Northern Mariana Islands.* Any amount allotted to the Virgin Islands, American Samoa, Guam, the Trust Territory of the Pacific Islands, or the Northern Mariana Islands in a fiscal year which is unobligated at the end of that year shall remain available for the purposes for which made, for the next two fiscal years (and for such years only), and that amount shall be in addition to the amounts allotted for that purpose for each of the next two fiscal years; except that any amount remaining unobligated at the end of the first of the next two fiscal years, which the Secretary determines will remain unobligated at the close of the second of the next two fiscal years, may be reallotted by the Secretary to any other of the five States (Virgin Islands, American Samoa, Guam, the Trust Territory of the Pacific Islands, and the Northern Mariana Islands) having need therefor on such basis as the Secretary deems equitable and consistent with the purposes of the act and the regulations of this subpart. Funds thus reallotted to any of those five States shall be available for the purposes for which made until the close of the second of the next two fiscal years and shall be in addition to the amounts allotted and available for the same period.

(c) *Reallotment approval.* Funds will not be reallotted to a State under paragraphs (a) and (b) of this section unless the Secretary finds that:

(1) The State has an approved State plan for the fiscal year during which the reallotted funds would be available for expenditure; and

(2) The State has filed the report required under paragraph (d) of this section and has provided such additional information as the Secretary may request with regard to the proposed use of the funds to be reallotted.

(d) *Reports.* Each State shall, with respect to each fiscal year in which it receives an allotment, submit a report to the Secretary which shall set forth the amount of the allotment remaining unobligated as of the date of the report, the State's plans, if any, for obligating such unobligated amount, the need, if any, for additional funds, and the State's plans for meeting such need if such additional funds are made available through reallotment.

(1) A State (other than the Virgin Islands, American Samoa, Guam, the Trust Territory of the Pacific Islands, and the Northern Mariana Islands) shall submit the report within 60 days of the end of the sixth month following the end of the fiscal year in which the allotment was made.

(2) The Virgin Islands, American Samoa, Guam, the Trust Territory of the Pacific Islands, and the Northern Mariana Islands shall submit the report within 60 days of the end of the first fiscal year following the fiscal year in which the allotment was made.

§ 54a.205 Allotment; administrative expenditures.

(a) At the request of a State on such forms, at such time, and in such manner as the Secretary may prescribe, a portion of any allotment or allotments of the State shall be available to pay that portion of the expenditures found necessary by the Secretary for the proper and efficient administration during the year of the State plan approved under the act and the regulations of this subpart, except that not more than 10 percent of the total of the allotments of the State for a year, or $50,000 whichever is less, shall be available during the year for that purpose.

(b) *Allowable costs.* Within the limit set forth in § 54a.205(a), allowability of administrative costs shall be determined in accordance with the applicable cost principles set forth in Subpart Q of 45 CFR Part 74. Expenditures which are allowable, if found necessary for the proper and efficient administration of the State plan, include:

(1) Costs of compensation of personnel and other administrative expenditures directly related to the preparation and administration of the State plan or to supervising that preparation and administration; and

(2) Expenditures incurred by a State advisory council established pursuant to section 303(a)(3) of the act, including per diem and travel expenses incurred by council members at rates not exceeding those established under applicable State law.

(c) *Unallowable costs.* Funds made available under this section may not be used for:

(1) Administrative costs exceeding 10 percent of the total of the allotment of a State for a year or $50,000, whichever is less;

(2) Administrative costs attributable to programs other than those funded under this subpart;

(3) Costs of central administrative departments of State and local governments other than those directly related to administration of the State plan;

(4) Administrative costs relating to services which the State is required to provide at its own expense in order to satisfy the maintenance of effort requirements of the act and the regulations of this subpart;

(5) Acquisition of land or construction or acquisition of buildings; or

(6) Matching other Federal grants.

§ 54a.206 Allotment; equipment, supplies, or personnel in lieu of cash.

At the request of a State on such forms, at such time, and in such manner as the Secretary may prescribe, the Secretary may, in lieu of cash payments, furnish equipment or supplies to the State or detail to the State officers or employees of the Department of Health, Education, and Welfare when he finds that the equipment, supplies, or personnel would be used for purposes for which an allotment would be available under the act and the regulations of this subpart. In that case, the Secretary will reduce the payments to which the State would otherwise be entitled from its allotment for the fiscal year by an amount which equals the fair market value of the equipment and supplies furnished and by the amount of the pay, allowances, traveling expenses, and other costs incurred in connection with the detail of officers or employees. The amount by which the payments are reduced shall be available for the payment of the costs incurred by the Secretary in furnishing the

equipment, supplies, and personnel but that amount shall, for purposes of determining the allotment under section 302(a) of the act and § 54a.203, be deemed to have been paid to the State.

§ 54a.207 State plan; submission and review.

(a) *Submission.* To receive funds from its allotment a State must submit to and have approved by the Secretary a State plan which contains or, as required by these regulations, incorporates by reference the information, proposals, and assurances specified in the act and in the regulations of this subpart. Documents incorporated by reference become a part of the State plan as though fully set forth therein. Such documents must be:

(1) Clearly identified as to subject, date, and location;

(2) Officially adopted and disseminated in accordance with applicable procedures; and

(3) Made available to the Secretary and readily available to the public for inspection.

The State plan must pertain to the 12-month period of the State fiscal year which commences in the calendar year in which the plan is submitted and must be submitted not later than July 31 of each calendar year.

(b) *Modification.* The State agency shall from time to time, but not less often than annually, review its State plan and submit to the Secretary for approval modifications thereof which shall:

(1) Contain budgetary requirements for the new fiscal year and such updates of the assurances and information, which under this subpart must be contained in the State plan, as may be prescribed by the Secretary; and

(2) Incorporate by reference such changes in the proposals and information, which under this subpart must be incorporated by reference in the State plan, as may be prescribed by the Secretary and such additional changes as the State agency may consider to be necessary.

(c) *Assessment of progress.* The State agency shall submit to the Secretary periodic reports assessing the progress of the State in implementing its State plan in such form and manner as the Secretary may prescribe. Such a report shall first be submitted with the State plan submitted for the first fiscal year beginning after September 30, 1977. Thereafter, the State agency shall make additional reports every third year in which it receives an allotment.

(d) *Review and comment by the Governor.* The State plan, any modification thereof, and all assessments of progress shall be submitted to the Governor of the State or the Governor's delegate for review and comment at least 45 days prior to submission of the plan, modification, or assessment of progress to the Secretary. The comments of the Governor or the Governor's delegate or such documentation of review without comment as the Secretary may prescribe, must be submitted to the Secretary with the plan, modification, or assessment of progress.

(e) *Publicized plan.* The State agency shall publicize a general description of the proposed plan, modification, or assessment of progress at least 30 days prior to the submission of the plan, modification, or assessment of progress to the Secretary. The State plan, modifications thereof, and assessments of progress must be readily available and accessible for examination and comment by interested persons prior to submission to the Secretary and during the period they are in effect.

§ 54a.208 State plan; purpose, coordination.

(a) *Purpose.* The purpose of the State plan is to provide a rational and more effective basis for the utilization of Federal, State, and all other available resources in planning, establishing, conducting, maintaining, coordinating, and evaluating prevention, treatment, and rehabilitation projects and programs to deal with alcohol abuse and alcoholism in the State and for ongoing planning for improvement and expansion of such activities, as necessary. The State plan may contain provisions relating to drug abuse or mental health.

(b) *Coordination of alcohol abuse and alcoholism prevention, treatment, and rehabilitation programs.* The State plan must: (1) Incorporate by reference a description of the policies and procedures under which the State agency will review and comment upon applications for assistance under section 311 of the act (42 U.S.C. 4577). As a minimum the policies and procedures must provide for:

(i) A written evaluation of the project set forth in the application which shall include comments on the relationship of the project to other projects pending and approved, and to the State plan.

(ii) State agency submission of such evaluation to the Secretary within 30 days of the date upon which the State agency received the application for assistance.

(iii) The furnishing of a copy of the evaluation to the applicant.

(2) Incorporate by reference the policies and procedures under which the State agency will, to the maximum extent practicable, coordinate and review the activities of other agencies within the State government, local and metropolitan area agencies, and interstate agencies to assure that all programs for the provision of services for people with alcohol abuse problems are consistent with the State plan. As a minimum, these policies and procedures must include provisions under which:

(i) The State agency will review and evaluate proposals for programs and projects directly or indirectly related to the development of more effective prevention, treatment, and rehabilitation programs to deal with alcohol abuse and alcoholism which are submitted to it by other agencies; and

(ii) The State agency will insure that those agencies or authorities with interests or responsibilities related to the project and program proposals developed or reviewed by the State agency have been afforded an opportunity to review the proposals.

(3) Provide assurance that the State agency will coordinate its planning with local alcoholism and alcohol abuse planning agencies and with other State and local health planning agencies.

(4) Incorporate by reference documentary evidence that all applicable requirements for submitting the State plan for review under title XV of the Public Health Service Act (42 U.S.C. 300k-1—300n-5) have been met.

§ 54a.209 State plan; single State agency.

(a) The State plan must incorporate by reference documentary evidence of the designation or establishment of a single State agency. Such documentation shall include:

(1) The executive order, statute, resolution, motion, or similar action by the State authority which designated or established the State agency; and

(2) Evidence that the State agency has legal authority to carry out the State plan and all duties and responsibilities required by the act and the regulations of this subpart.

(b) If the State agency is responsible for State programs in addition to the State alcohol abuse and alcoholism program, the State plan must incorporate by reference documents which identify each program for which it is responsible, which identify the unit and official responsible for the alcohol abuse and alcoholism program, and which establish policies and procedures for insuring that separate records are maintained with respect to the alcohol abuse and alcoholism program and that all other applicable Federal requirements are met.

(c) The State plan must incorporate by reference documents which describe methods under which the State agency will either administer or supervise the administration of the activities to be carried out under the State plan. If part or all of the responsibility for administering the State plan has

been or is to be delegated to one or more agencies (under the supervision of the State agency), the State plan must incorporate by reference documents which identify such other agency or agencies, including local government agencies, and set forth the responsibilities of each such agency.

§ 54a.210 State plan; State advisory council.

(a) *Establishment; scope of authority.* The State plan must incorporate by reference documents which provide for the designation or establishment of a State Alcohol Abuse Advisory Council to consult with and advise the State agency in carrying out the State plan.

(b) *Membership.* (1) The membership of the State Alcohol Abuse Advisory Council shall, to the extent practicable, be drawn from different geographical areas of the State, and shall provide representation for:

(i) Nongovernmental organizations concerned directly or indirectly with alcohol abuse and alcoholism, such as local citizen groups, employee groups, labor and management, and other provider, consumer, and consumer advocate groups; and

(ii) Public agencies and officials concerned directly or indirectly with alcohol abuse and alcoholism, such as elected chief executives of local general purpose governments (or their representatives), other local elected officials and representatives of health and mental health agencies, vocational rehabilitation agencies, welfare agencies, and law enforcement agencies; and

(iii) The minority, poverty, and major population groups which are significantly affected by the problems of alcohol abuse and alcoholism and which are to be served under the State plan; and

(iv) At least one representative of the Statewide Health Coordinating Council established pursuant to section 1524 of the Public Health Service Act (42 U.S.C. 300m-3).

(2) The State plan shall incorporate by reference documents which contain the policies and procedures for selection of Advisory Council members, and a list of members for the current fiscal year, their names, addresses, occupations, and affiliations.

(c) *Meetings; recommendations.* (1) The State plan must incorporate by reference guidelines and instructions establishing the time, place, and frequency of meetings of the Council which shall provide, as a minimum, for annual meetings of the Council.

(2) The State agency shall maintain records of the recommendations made to it by the State Alcohol Advisory Council and, if such recommendations are not adopted, the reasons therefor.

§ 54a.211 State plan; survey of need, resource allocation plan.

(a) *Need.* Each State plan must set forth a survey of the need for prevention, treatment, and rehabilitation programs to deal with alcohol abuse and alcoholism, including a survey of the need for health facilities to provide services for alcohol abuse and alcoholism. The survey of need shall encompass the social, economic, and medical aspects of the problem of alcohol abuse and alcoholism; and shall take into account the relative extent of the problems of alcohol abuse and alcoholism within various population groups (including women and individuals under the age of 18) or areas as follows:

(1) Estimate the proportion of the population of the State with alcohol abuse and alcoholism problems and the proportion of the population directly or indirectly affected by such problems.

(2) Identify areas within the State with a high incidence of alcohol abuse and alcoholism problems determined on the basis of:

(i) The demographic and socioeconomic characteristics of the population within each areas identified, such as age, sex, income, employment and unemployment rates, types of occupation, and ethnic makeup of the area; and

(ii) The special needs of specific population groups within each area with actual or potential problems of alcohol abuse and alcoholism, such as drinking drivers, chronic public intoxicants, offenders within the correctional system, women, senior citizens, youth (individuals under the age of 18), Indians, employees of State and local governments and private industry, and groups within each such area whose occupational and social conditions make them vulnerable to alcohol abuse and alcoholism.

(3) Estimate the extent of the problem of alcohol abuse and alcoholism compared to other health and social problems confronting the people of the State.

(b) *Current resources.* The State plan shall contain a description of the present availability and accessibility of public and private resources for the provision of alcohol abuse and alcoholism prevention, treatment, and rehabilitation services, including:

(1) A complete inventory (to the extent feasible) of all private and public resources available in the State for such purposes including but not limited to programs funded under State and local laws, occupational programs for employees in State and local government and in private industry or other work settings, voluntary organizations, education programs, military and Veterans' Administration resources, community mental health centers, hospitals, and other health care or social service centers which provide such services:

(2) Personnel qualified to provide such services;

(3) Financial support, including public and private third party payments, for the provision of such services;

(4) State laws affecting the availability and accessibility of such resources; and

(5) Other health and social problems confronting the State which may affect the availability of resources for meeting alcohol abuse and alcoholism problems.

(c) *Additional resources needed.* The State plan must contain a description of the additional resources, including facilities, personnel, training, technical assistance, and funds, necessary to meet those needs identified pursuant to paragraph (a) of this section which are not being met by the existing resources described pursuant to paragraph (b) of this section.

(d) *Action plan.* The State plan must set forth a comprehensive action plan establishing priorities for the development and distribution throughout the State of alcohol abuse and alcoholism prevention, treatment, and rehabilitation programs and facilities. This plan must:

(1) Utilize, to the extent practicable, the existing resources described in paragraph (b) of this section;

(2) Describe the steps necessary to secure and develop the necessary resources described in paragraph (c) of this section;

(3) Establish priorities for the distribution of facilities and services in all geographic areas and subareas of the State;

(4) Set forth, in the order of such priorities, the additional projects and programs required to meet the unmet need, the estimated costs of each and the source of financial and other resources expected to support each project or program, including formula grant support made available under the act and the regulations of this subpart;

(5) Include a timetable for completing all such projects and programs; and

(6) Include a long term plan for expansion or diminution of existing resources or development of new resources in accordance with projected estimates of future needs.

§ 54a.212 State plan; criteria for construction and licensing of facilities. [Reserved]

§ 54a.213 State plan; personnel administration.

(a) *Merit system personnel.* The State plan shall provide for the establishment and maintenance of personnel standards on a merit basis for persons employed by the State agency in the administration or supervision of the administration of the State plan. Conformity with Standards for a Merit System of Personnel Administration, 45 CFR Part 70, issued by the Secretary of Health, Education, and Welfare, including any amendments thereto, and any standards prescribed by the U.S. Civil Service Commission pursuant to section 208 of the Intergovernmental Personnel Act of 1970 (42 U.S.C. 4728) modifying or superseding such standards, will be deemed to meet this requirment as determined by said Commission. Laws, rules, regulations, and policy statements, and amendments thereto, effectuating such methods of personnel administration shall be incorporated by reference in the State plan.

(b) *Equal employment opportunity.* Equal employment opportunity will be assured in the State merit system and affirmative action provided in its administration. Discrimination against any person in recruitment, examination, appointment, training, promotion, retention, discipline, or any other aspect of personnel administration because of political or religious opinions or affiliations or because of race, national origin, or other nonmerit factors will be prohibited. Discrimination on the basis of age or sex or physical disability will be prohibited except where specific age, sex, or physical requirements constitute a bona fide occupational qualification necessary to proper and efficient administration. The State merit system must include procedures for appeals in cases of alleged discrimination to an impartial body whose determination shall be binding upon a finding of discrimination. The State must develop an affirmative action plan to assure such equal employment opportunity which shall be subject to inspection, comment, and approval by the Secretary. Such plan shall contain such information and be completed on such date as the Secretary may prescribe.

(c) *Nondiscrimination on the basis of prior alcohol abuse.* The State shall contain an assurance that the State will establish policies and procedures to assure that no qualified applicant for a position supported in whole or in part from funds made available from the State's allotment will be denied employment solely on the basis of having or not having a prior history of alcohol abuse.

(d) *Other personnel.* The State plan must include professional standards to be followed in hiring individuals (other than employees under a government merit system) to carry out activities related to the implementation of the State plan. Such standards shall include schedules or other bases upon which the salaries of such personnel are determined and paid which shall be in accord with the usual and customary practices in the State.

§ 54a.214 State plan; nondiscrimination by federally assisted private and public general hospitals and outpatient facilities in the admission and treatment of alcohol abusers.

(a) The State plan must provide that the State agency will:

(1) Review admissions to private and public general hospitals and outpatient facilities to assist the Secretary in determining the compliance of such facilities with section 321 of the act (42 U.S.C. 4581) which provides that alcohol abusers and alcoholics who are suffering from medical conditions shall not be discriminated against in admission or treatment, solely because of their alcohol abuse or alcoholism, by any private or public general hospital or outpatient facility (as defined in section 1633(6) of the Public Health Service Act, 42 U.S.C. 300s-3(6)) which receives support in any form from any program supported in whole or in part by funds appropriated to any Federal department or agency, and

(2) Make periodic reports to the Secretary respecting such review at such time and on such forms as the Secretary may prescribe.

§ 54a.215 Assurances.

In addition to any other assurances required by law and the regulations of this subpart the State plan must contain the following assurances:

(a) *Maintenance of effort.* An assurance that Federal funds made available under sections 301-303 of the act and the regulations of this subpart will be so used as to supplement and increase, to the extent feasible and practical, the level of State, local, and other non-Federal funds that would in the absence of such Federal funds be made available for the programs described in sections 301-303 of the act and will in no event supplant such State, local, and other non-Federal funds. A State will be considered to be in substantial compliance with such assurance if the Secretary finds that the aggregate level of State, local, and other non-Federal funds expended for alcohol abuse prevention, treatment, and rehabilitation services and activities carried out under the State plan with Federal assistance made available under sections 301-303 of the act is no lower for any fiscal year than the aggregate level of those expenditures in the immediately preceding fiscal year, except that the Secretary may take into consideration the extent to which the level of such funds for any fiscal year may have included funds for an activity of a nonrecurring nature.

(b) *Community service.* Assurances that all facilities, programs, and services supported in whole or in part with funds made available under sections 301-303 of the act and the regulations of this subpart will be:

(1) Responsive to the needs of all members of the population to be served and made available to them without discrimination on the grounds of sex, creed, duration of residence, or ability or inability to pay for services;

(2) So publicized as to be generally known to the population to be served; and

(3) So located as to be readily accessible to the population to be served.

(c) *Records and reports.* An assurance that the State agency will comply with the provisions of 45 CFR Part 74 relating to records and reports.

(d) *Certification, accreditation, or licensure requirements.* Assurance that State certification, accreditation, or licensure requirements, if any, applicable to alcohol abuse and alcoholism treatment facilities and personnel take into account the special nature of such programs and personnel, including the need to encourage the development of nonmedical modes of treatment and the need to acknowledge previous experience when assessing the adequacy of treatment personnel.

(e) *Performance standards.* Reasonable assurance that prevention or treatment programs supported by funds made available under section 302 of the act have provided to the State agency a proposed performance standard or standards to measure, or research protocol to determine, the effectiveness of such prevention or treatment programs or projects.

(f) *Women and youth.* Assurance that prevention and treatment programs within the State will be designed to meet the need of women and individuals under the age of 18 for alcohol abuse and alcoholism prevention and treatment.

(g) *Relocation assistance.* An assurance that the State agency will comply with the requirements of the Uniform Relocation Assistance and Real Property Acquisitions Act of 1970 (Pub. L. 91-646) and the applicable regulations issued thereunder (45 CFR Part 15).

Subpart C—Special Grants for Implementation of the Uniform Alcoholism and Intoxication Treatment Act [Reserved]

Subpart D—Project Grants for the Prevention and Treatment of Alcohol Abuse and Alcoholism

AUTHORITY: 42 U.S.C. 4577.

§ 54.401 Applicability.

This subpart applies only to grants under section 311 of the act (42 U.S.C. 4577) for the prevention and treatment of alcohol abuse and alcoholism and for the rehabilitation of alcohol abusers and alcoholics.

§ 54a.402 Eligibility.

(a) *Eligible applicants.* To be eligible for a grant award under this subpart, an applicant must be a public or nonprofit private entity.

(b) *Eligible projects.* To be eligible for a grant award under this subpart, an eligible applicant must propose a project which is designed:

(1) To demonstrate innovative approaches to solving the problems of alcohol abuse and alcoholism such as:

(i) New methods and programs for the prevention and treatment of alcohol abuse and alcoholism and for the rehabilitation of alcohol abusers and alcoholics;

(ii) The adaptation of existing services to meet the needs of specific population groups; or,

(iii) Methods for initiating or improving delivery systems for alcohol abuse and alcoholism prevention, treatment, and rehabilitation services at local, State, or regional levels (including projects designed to develop methods for the effective coordination of all alcoholism training, treatment, and prevention and research resources available within a health service area established pursuant to section 1511 of the Public Health Service Act, 42 U.S.C. 300*l*);

(2) To provide prevention, treatment, or rehabilitation services for persons with alcohol abuse and alcoholism problems, with special emphasis on currently underserved populations and individuals in geographic areas where such services are not otherwise adequately available, including the training of persons to provide such services;

(3) To educate and train professional or nonprofessional personnel for the prevention and treatment of alcohol abuse and alcoholism and for the rehabilitation of alcohol abusers and alcoholics (including personnel attempting to meet certification requirements of public or private accreditation or licensure, or requirements of third-party payors);

(4) To provide alcohol abuse and alcoholism prevention, treatment, and rehabilitation programs and services through, or in cooperation with, law enforcement personnel, schools, courts, penal institutions, and other public agencies; or

(5) To provide, on a local, State, or national basis, counseling and education activities for the prevention and treatment of alcohol abuse and alcoholism and for the rehabilitation of alcoholic abusers and alcoholics.

§ 54a.403 Application.

(a) Each eligible entity desiring a grant under this subpart shall submit an application in such form and at such time as the Secretary may prescribe.[1] The application shall contain a full and adequate description of the proposed project and of the manner in which the applicant intends to conduct the project and carry out the requirements of this subpart, a budget and justification of the amount of funds required, and such other pertinent information as the Secretary may require.

(b) The application shall be executed by an individual authorized to act for the applicant and to assume for the applicant the obligations imposed by the terms and conditions of any award including the regulations of this subpart.

(c) An application to the Secretary from an applicant within a State must:

(1) Provide assurance that a copy of the application has been forwarded for review by the State agency designated under section 303 of the act, if that designation has been made;

(2) Include evidence that all applicable requirements for submitting the application for review under title XV of the Public Health Service Act (42 U.S.C. 300k-1-300n-5) have been met.

(3) Include evidence that the requirements of part I of Office of Management and Budget Circular No. A-95 have been satisfied.

§ 54a.404 Project requirements.

To be considered for approval under this subpart, an application must, as relevant to the particular project proposed:

(a) Contain an assurance that all activities to be carried out under the grant will be substantially administered by or under the supervision of the applicant.

(b) Contain an assurance that Federal funds made available under the act will not supplant non-Federal funds otherwise available for carrying out the activities which are eligible for assistance under this subpart and that such funds will, to the extent practical, be used to increase the level of funds otherwise available for such activities. A recipient of assistance under this subpart will be considered to be in substantial compliance with such assurance if the Secretary finds that the aggregate level of non-Federal funds available to and spent by an applicant to which Federal grant funds are made available under the act and the regulations of this subpart is no lower for any fiscal year than if it was for the immediately preceding fiscal year, except that the Secretary may take into consideration the extent to which the level of such funds for any fiscal year may have included funds for an activity of a nonrecurring nature.

(c) Contain an assurance that no qualified applicant for a position supported in whole or in part from grant funds made available under this subpart will be denied employment solely on the basis of having or not having a prior history of alcohol abuse or alcoholism.

(d) Provide for such methods of administration as the Secretary prescribes as necessary for the proper and efficient operation of the project, including the requirements prescribed by the regulations of this subpart.

(e) Describe fiscal control and fund accounting procedures which meet the requirements prescribed by the Secretary for assuring proper disbursement of and accounting for Federal funds paid to the applicant, including the requirements of the regulations of this subpart.

(f) Provide evidence satisfactory to the Secretary of the need for the particular type of project proposed.

(g) Describe how the project will serve or support the provision of services to a particular community, area, or population group.

(h) Provide, in the case of treatment projects, an estimate of the number of persons to be served by each program element, i.e., inpatient, outpatient, intermediate care, etc. for each budget period of the project period.

(i) Provide, in the case of treatment projects, an estimate of the costs per unit of service, i.e., inpatient day, outpatient hour, intermediate care day, etc. for each budget period of the project period.

(j) Describe the facilities (including the location thereof) which will be utilized in the conduct of the project.

(k) Describe the extent to which the project will utilize existing community resources (including community mental health centers) to insure the provision of continuum of appropriate care for the persons it serves.

[1] Prevention grant applications and instructions may be obtained from the Director of the National Institute on Alcohol Abuse and Alcoholism, 5600 Fishers Lane, Rockville, Md. 20857. Treatment grant applications and instructions may be obtained from the designated State Alcoholism Authority for the State in which the applicant is located or directly from the National Institute on Alcohol Abuse and Alcoholism.

(l) Describe how the project will be integrated with, and, involve the active participation of, a wide range of public and nongovernmental agencies, organizations, institutions, and individuals, including individuals representative of the population to be served by the project. The description must specify how such agencies, organizations, institutions, and individuals have been given an opportunity to participate in the development of the project and will be given an opportunity to participate in the implementation and evaluation of such project.

(m) Propose a performance standard (or standards) to measure, or research protocol to determine, the effectiveness of services provided under the project.

(n) Agree to provide client demographic, treatment service, and resource data, as required, for the routine monitoring of treatment projects at the Federal level.

(o) Describe how the project will become self-sufficient.

(p) Provide assurance that all services provided under the project will be made available on a voluntary basis (to the extent possible) without the imposition as a condition of eligibility for services of any durational residence or referral requirement and that services will be made available in such manner as to protect the dignity and rights of individuals.

(q) Provide assurance that no person shall be denied services by reason of his inability to pay therefor, but that the applicant shall:

(1) Comply with 42 CFR 50.101-50.106 which, among other things, require each project to establish a plan to: (i) Institute sound fiscal management procedures so that it can recover to the maximum extent feasible third-party revenues to which it is entitled as a result of services provided; (ii) Garner all other available Federal, State, local, and private funds; and (iii) Charge beneficiaries according to their ability to pay for services provided, without creating a barrier to those services; and

(2) Otherwise seek, whenever possible, to provide care under public and private health insurance plans.

(r) Contain a plan for the performance of informational and educational activities to inform the community or population to be served of the availability of services under the project and to promote continuing participation in the project by persons to whom alcohol abuse and alcoholism prevent, treatment, and rehabilitation services may be beneficial.

(s) Include a description of the standards and qualifications which will be required for personnel and facilities utilized in carrying out the project.

(t) Indicate whether a substantial number of individuals in the population served by the project are of limited English-speaking ability and, where a substantial number are of limited English-speaking ability, describe how the project will:

(1) Utilize the services of outreach workers fluent in the language spoken by a predominant number of such individuals, and

(2) Develop a plan and make arrangements responsive to the needs of such population for providing services to the extent practicable in the language and cultural context most appropriate to such individuals, and

(3) Identify an individual who is employed by, or available to, the project on a full-time basis who is fluent both in that language and English and whose responsibilities shall include providing guidance to the individuals of limited English-speaking ability and to appropriate staff members with respect to cultural sensitivities and bridging linguistic and cultural differences.

(u) Contain assurances satisfactory to the Secretary that the recipient will undertake to develop and maintain such new and existing relationships or arrangements with community mental health centers and providers of alcohol services in its service area as are sufficient to assure the availability of mental health and alcohol services to the population served by the recipient.

§ 54a.405 Evaluation and grant award.

(a) Within the limits of funds available for such purpose, the Secretary, after taking into account the comments, if any, of the State agency designated under section 303 of the act and of appropriate peer review groups, may award grants to cover all or part of the cost of those projects which are consistent with the State plan and have been recommended for approval by the Council and which will in his judgment best promote the purposes of section 311 of the act, giving special consideration to those projects for prevention and treatment of alcohol abuse and alcoholism by women and by individuals under the age of eighteen and taking into consideration the following factors, among others, as relevant to the particular project proposed:

(1) The administrative and management capability and competence of the applicant;

(2) The ability of the applicant to provide care of good quality taking into account factors such as the adequacy of the applicant's facilities and staff;

(3) The extent to which the activities to be carried out under the project are needed to provide, or support the provision of alcohol abuse and alcoholism prevention, treatment, and rehabilitation services in the community or population to be served;

(4) The relative availability of non-Federal resources within the community or population to be served and the degree to which those resources are committed to the project and will progressively supplant Federal funds; and

(5) The degree to which the project application adequately meets the applicable requirements set forth in §§ 54a.404 and 54a.405.

(b) The amount of any award shall be determined by the Secretary on the basis of his estimate of the sum necessary for all of a designated portion of the direct costs of the project plus an additional amount for indirect costs, if any, which will be calculated by the Secretary either:

(1) On the basis of his estimate of the actual indirect costs reasonably related to the project; or

(2) On the basis of a percentage of all or a designated portion of the estimated direct costs of the project when there are reasonable assurances that the use of such percentage will not exceed the approximate actual indirect costs.

Such award may include an estimated provisional amount for indirect costs or for designated direct costs such as fringe benefit rates subject to upward (within the limits of available funds) as well as downward adjustments to actual costs when the amount properly expended by the grantee for provisional items has been determined by the Secretary.

(c) All grant awards shall be in writing, shall set forth the amount of funds granted, and the period for which such funds will be available for obligation by the grantee.

(d) Neither the approval of any project nor the award of any grant shall commit or obligate the United States in any way to make any additional, supplemental, continuation, or other award with respect to any approved project or portion thereof. For continuation support (i.e., support for a subsequent budget period within the project period), grantees must make separate applications at such times and on such forms as the Secretary may direct.

§ 54a.406 Expenditure of grant funds.

(a) Any funds granted pursuant to the subpart, and any non-Federal funds required as a condition of the grant to be expended in the project, shall be expended solely for carrying out the approved project in accordance with section 311 of the act, the regulations of this subpart, the terms and conditions of the award, and the applicable cost principles prescribed by Subpart Q of 45 CFR Part 74.

(b) Any unobligated grant funds remaining in the grant account at the close of a budget period may be carried forward with the prior approval of the Secretary and be available for obligation during subsequent budget periods of the project period. The amount of a subsequent award will take into consideration the amount remaining in the grant account. At the end of the last budget period of the project period, any unobligated grant funds remaining in the grant account must be refunded to the Federal Government.

§ 54a.407 Grantee accountability.

(a) *Accounting for grant payments.* All payments made by the Secretary shall be recorded by the grantee in accounting records which identify adequately the source and application of funds for grant or subgrant/subcontract supported activities. These records shall contain information pertaining to grant or subgrant/subcontract awards and authorizations, obligations, unobligated balances, assets, liabilities, outlays, and income. With respect to each approved project the grantee shall account for the sum total of all amounts paid by presenting or otherwise making available evidence satisfactory to the Secretary of expenditures for costs meeting the requirements of this subpart. However, when the amount awarded for indirect costs is based on a predetermined fixed percentage of estimated direct costs, the amount allowed for indirect costs shall be computed on the basis of such predetermined fixed-percentage rates applied to the total, or a selected element thereof, of the reimbursable direct costs incurred.

(b) *Audits.* Audits meeting the standards prescribed in 45 CFR 74.61(h)(1) shall be conducted by all grantees. The costs of audits conducted pursuant to this paragraph are allowable costs chargeable to the grant as direct or indirect costs, as appropriate. The estimated direct costs of the annual audit, if any, should be shown as a separate line item in the budget for each year of support requested in the application.

(c) *Grant closeout.*—(1) *Date of final accounting.* In addition to such other special and periodic accounting as the Secretary may require, a grantee shall render, with respect to each approved project, a full account, as provided herein, as of the termination of grant support which shall be (i) The end of the budget period if a continuation grant is not made, (ii) The end of the project period, or (iii) The date of any termination of grant support pursuant to Subpart M of 45 CFR Part 74.

(2) *Final settlement.* There shall be payable to the Federal Government as final settlement with respect to each approved project the total sum of (i) Any amount not accounted for pursuant to paragraphs (a) and (b) of the section; and (ii) Any other amounts due pursuant to subparts F, M, and O of 45 CFR Part 74. Such total sum shall constitute a debt owed by the grantee to the United States and shall be recovered from the grantee or its successors or assigns by setoff or other action as provided by law.

§ 54a.408 Publications and copyrights.

(a) *Copyright.* Except as may otherwise be provided under the terms and conditions of the award, the grantee is free to copyright any book or other copyrightable materials developed under the grant subject to a royalty-free, nonexclusive, and irrevocable license of the Department of Health, Education, and Welfare to reproduce, publish, alter, or otherwise use, and to authorize others to use the work for government purposes. In any case in which a copyright has been obtained, the Secretary shall be so notified.

(b) *Publications.* Any reports, papers, statistics, or other materials developed from work supported in whole or in part by an award made under this subpart shall be submitted to the Secretary. The Secretary may make such materials available and disseminate the material on as broad a basis as practicable, and in such form as to make such materials understandable.

§ 54a.409 Additional conditions.

The Secretary may with respect to any grant award impose additional conditions prior to or at the time of any award when in his judgment such conditions are necessary to assure or protect advancement of the approved project, the interest of public health, or the conservation of grant funds.

Subpart E—Grants for National Alcohol Research Centers [Reserved]

[FR Doc. 78-25457 Filed 9-8-78; 8:45 am]

Federal Register

MONDAY, SEPTEMBER 11, 1978
PART IV

DEPARTMENT OF HOUSING AND URBAN DEVELOPMENT

Section 8 Existing Housing Assistance Program for the Disposition of HUD-Owned Projects

[4210-01]

Title 24—Housing and Urban Development

CHAPTER VIII—LOW INCOME HOUSING, DEPARTMENT OF HOUSING AND URBAN DEVELOPMENT

[Docket No. R-78-569]

PART 886—SECTION 8 HOUSING ASSISTANCE PAYMENTS PROGRAM—SPECIAL ALLOCATIONS

Subpart C—Section 8 Existing Housing Assistance Program for the Disposition of HUD-Owned Projects

AGENCY: Office of the Assistant Secretary for Housing—Federal Housing Commissioner, (HUD).

ACTION: Interim rule.

SUMMARY: The Secretary is amending the Section 8, Existing Housing Assistance Program for the Disposition of HUD-Owned Projects. This amendment establishes a program by which HUD may sell housing it owns with Section 8 housing assistance available for a specified number of units after sales closing. The subpart is needed to promote HUD statutory responsibilities and improve the stock of housing for low- and moderate-income persons as discussed under supplementary information.

COMMENTS DUE: December 11, 1978.

EFFECTIVE DATE: September 11, 1978.

ADDRESS: Interested persons may participate in this rulemaking by submitting written comments, suggestions or data to the Rules Docket Clerk, Office of the General Counsel, Room 5218, Department of Housing and Urban Development, 451 Seventh Street, SW., Washington, D.C. 20410. Each person submitting comments should indicate his or her name and address and should refer to the date of publication of this interim rule and give the docket number that appears in the heading. Reasons should be given for the commenter's opinion. Copies of all written comments will be available for examination and copying by interested persons in the Office of the Rules Docket Clerk at the address to which comments are submitted. After public participation has concluded, the Secretary will issue a final rule in this preceding, adopting the subpart with such changes as may be appropriate in light of the public rulemaking.

FOR FURTHER INFORMATION CONTACT:

J. D. McNees, Acting Director, Office of Property Disposition, Department of Housing and Urban Development, 451 Seventh Street SW., Washington, D.C. 20410. Phone number 202-755-6678.

SUPPLEMENTARY INFORMATION: The Secretary has determined a new program is needed to enable the Department to provide section 8 existing housing assistance in connection with the sale of HUD-owned housing generally not requiring substantial rehabilitation after sales closing.

This new program will complement the Department's present efforts to restore housing, which it owns and intends to sell, to decent, safe and sanitary condition. The new program also will assist the Department in attaining several objectives; namely, to increase and maintain the amount of decent, safe and sanitary housing affordable by lower-income families, to minimize displacement of tenants, to preserve and revitalize residential neighborhoods, and to reduce the number of HUD-owned properties in a manner consistent with meeting the Department's disposition objectives.

As this program is designed for use in conjunction with property disposition, 24 CFR Part 290 is also applicable. The Department intends to issue revised part 290 regulations for comment by November 1, 1978. These regulations are likely to affect HUD's administration of this subpart. Therefore, this subpart may be revised after publication of the new final version of the part 290 regulations to reflect changes necessitated by these regulations and any public comments received on this subpart.

The Department is cognizant of its responsibility to address any potential for displacement, particularly pending the part 290 revision. In the implementation of this program, the Department will avoid displacement without appropriate assistance for all tenants affected by this program.

The Department is not providing for public comment in advance of the effective date of this subpart since a procedure is needed to provide quickly for the sale of HUD-owned housing so that such housing can be made available as decent housing affordable to lower-income families. Most of the provisions in these regulations have been addressed by HUD field staff in meetings at Headquarters and by the public through the opportunity to comment on similar regulations, specifically part 886, subparts A and B. For these reasons, the Department finds it impractical and unnecessary to provide for public comment in advance of the effective date of this subpart, and good cause exists for making this rule effective upon publication.

Though these regulations are published as an interim rule because of the importance of immediate implementation of this program, the Department recognizes the need for public comment and the safeguards and acceptance resulting from such comments.

A finding of inapplicability with respect to environmental impact has been prepared in accordance with HUD Handbook 1390.1. A copy of this finding is available for inspection and copying in the Office of the Rules Docket Clerk at the above address.

Some of the more basic provisions of this interim rule are as follows:

APPLICABILITY

This rule provides for the use of section 8 housing assistance with the sale of any HUD-owned housing for which the property disposition recommendation prepared in accordance with part 290 recommends sale with subsidy.

DEFINITIONS

The definitions in this subpart are similar to those in part 886, subpart A, and part 290, with changes made to reflect significant program differences.

FUNDING

Contract authority and budget authority under this program will be provided from the Headquarters reserve authority approved specifically for this use. Section 8 authority will be reserved for a particular project at the time the Assistant Secretary for Housing-Federal Housing Commissioner approves the project for sale with assistance under this subpart or thereafter.

NOTICES

In order to assure that local government has an opportunity to review and comment upon the use of section 8 assistance in connection with the sale of a project within its jurisdiction, the HUD field office, before a project is approved for sale, must notify the chief executive officer of the unit of general local government of the proposed sale with section 8 assistance and must afford local government an opportunity to comment upon the proposed sale.

Where a PHA exists and will not be the owner of the project after the sale, the PHA also must be notified of the proposed sale and must be invited to become a party to the section 8 contract to authorize evictions for an agreed fee, which is a procedure identical to that presently provided in subpart A.

INFORMATION FOR POTENTIAL PURCHASERS

Projects sold pursuant to this subpart will be offered for sale in accordance with part 290. At the time of sales offering, potential purchasers

will be informed of particular requirements and conditions attaching to the sale as a result of this program, including the amount of contract rents and whether or not the purchaser is to provide utilities.

ACTIONS AFTER SALES CLOSING

After sales closing, the section 8 housing assistance contract will be administered by the Department in accordance with the procedures currently applicable to subpart A. In addition, project operation will be subject to the Department's review.

CONTRACT TERM

The term of the section 8 contract will not exceed 15 years.

RENTAL RATES

The rental rates will not exceed the section 8 fair market rents for existing housing, unless the contract units were constructed or substantially rehabilitated within the last 6 years and qualify as recently completed housing. Therefore, the per unit subsidy cost will be substantially less than that in subpart B where the applicable fair market rents are those for substantial rehabilitation.

Accordingly, the Department amends 24 CFR Part 886 by adding a new Subpart C to read as follows:

Subpart C—Section 8 Existing Housing Assistance Program for the Disposition of HUD-Owned Projects

Sec.
886.301 Purpose.
886.302 Definitions.
886.303 Allocation and Reservation of Section 8 Contract Authority and Budget Authority.
886.304 Project Eligibility Criteria.
886.305 PHA Involvement.
886.306 Notices.
886.307 Housing Quality Standards.
886.308 Maximum Total Annual Contract Commitment.
886.309 Housing Assistance Payments to Owners.
886.310 Initial Contract Rents.
886.311 Term of Contract.
886.312 Rent Adjustments.
886.313 Equal Opportunity and Fair Housing Requirements.
886.314 Financial Default.
886.315 Security and Utility Deposits.
886.316 Establishment of Income Limit Schedules; 30 Percent Occupancy by Very Low-Income Families.
886.317 Establishment of Amount of Housing Assistance Payments.
886.318 Responsibilities of the Owner.
886.319 Responsibility for Contract Administration.
886.320 Default Under the Contract.
886.321 Marketing.
886.322 Lease Requirements.
886.323 Maintenance, Operation, and Inspections.
886.324 Reexamination of Family Income, Composition, and Extent of Exceptional Medical or Other Unusual Expenses.
886.325 Overcrowded and Underoccupied Units.
886.326 Adjustment of Allowance for Utilities and Other Services.
886.327 Inapplicability of Low-Income Public Housing Model Lease and Grievance Procedures.
886.328 Evictions.
886.329 Reduction of Number of Contract Units for Failure to Lease to Eligible Families.
886.330 HUD Review of Contract Compliance.

AUTHORITY: Sec. 7(d), Department of Housing and Urban Development Act (42 U.S.C. 3535(d)); Sec. 5(b) of the United States Housing Act of 1937 (42 U.S.C. 1437c (b)); Sec. 8 of the United States Housing Act of 1937 (42 U.S.C. 1437f).

Subpart C—Section 8 Existing Housing Assistance Program for the Disposition of HUD-Owned Projects

§ 886.301 Purpose.

The purpose of this subpart is to provide for the use of section 8 housing assistance in connection with the sale of HUD-owned housing in order to increase and maintain the amount of decent, safe, and sanitary housing affordable by lower-income families, to minimize displacement of tenants, to preserve and revitalize residential neighborhoods, and to dispose of projects in a manner consistent with HUD's disposition objectives.

§ 886.302 Definitions.

Act. The United States Housing Act of 1937.

Allowance for utilities and other services ("Allowance"). An amount determined or approved by HUD as an allowance for the cost of utilities (except telephone) and charges for other services payable directly by the family.

Contract. (See section 8 contract.)

Contract rent. The rent payable to the owner under the contract, including the portion of the rent payable by the family, not to exceed the amount stated in the section 8 contract as such amount may be adjusted in accordance with § 886.312. In the case of a cooperative, the term "contract rent" means charges under the occupancy agreements between the members and the cooperative.

Decent, safe, and sanitary. Housing is decent, safe, and sanitary if the requirements of section 886.307 are met.

Eligible family ("Family"). A family (including those covered by the definitionb of "family" in part 812 of this chapter) which qualifies as a lower income family and meets the other requirements of the Act and this part. A family's eligibility for housing assistance payments continues until its gross family contribution equals the gross rent for the dwelling unit it occupies, but the termination of eligibility at such point shall not affect the family's other rights under its lease nor shall such termination preclude resumption of payments as a result of subsequent changes in income or other relevant circumstances during the term of the contract.

Eligible project. A HUD-owned multifamily housing project or HUD-owned home properties together having five or more dwelling units: (1) For which the final disposition program developed in accordance with the provisions of part 290 involves sale with section 8 housing assistance to enable the project to be used, in whole or in part, to provide housing for lower income families, and (2) the units of which are decent, safe, and sanitary as set forth in section 886.307, except as provided in section 886.304(b).

Fair market rent. (a) The rent which is determined by HUD as the fair market rent for existing housing under section 8. This fair market rent is the rent, including utilities (except telephone), ranges and refrigerators, parking, and all maintenance, management, and other services, which, as determined at least annually by HUD, would be required to be paid in order to obtain privately owned, existing, decent, safe, and sanitary rental housing of modest (nonluxury) nature with suitable amenities. Separate fair market rents shall be established for dwelling units by various sizes (number of bedrooms) and types (e.g., elevator and nonelevator).

(b) The fair market rent, minus the amount of any applicable allowance for utilities and other services payable directly by the family, shall be the maximum amount that can be approved as the contract rent, except that the maximum approvable amount may be higher or lower as provided in § 886.310 or § 886.312.

Gross family contribution. The portion of the gross rent payable by an eligible family, i.e., the difference between the amount of the housing assistance payment payable on behalf of the family and the gross rent. (See also part 889.)

Gross rent. The contract rent plus any allowance for utilities and other services.

HCD Act. The Housing and Community Development Act of 1974.

Housing assistance payment on behalf of eligible family. The amount of housing assistance payment on behalf of an eligible family determined in accordance with schedules and criteria established by HUD. (See also part 889.)

HUD. The Department of Housing and Urban Development or its designee.

Income. Income from all sources of each member of the household as de-

termined in accordance with criteria established by HUD. (See also part 889.)

Lease. A written agreement between an owner and an eligible family for leasing of a decent, safe, and sanitary dwelling unit in accordance with the applicable contract, which agreement is in compliance with the provisions of this subpart.

Lower income family. A family whose income does not exceed 80 percent of the median income for the area as determined by HUD with adjustments for smaller or larger families, except that HUD may establish income limits higher or lower than 80 percent on the basis of its findings that such variations are necessary because of the prevailing levels of construction costs, unusually high or low incomes, or other factors.

Owner. The purchaser, under this subpart, of a HUD-owned project, including a cooperative entity.

Project. See eligible project.

Project account. The account established and maintained in accordance with § 886.308.

Public housing agency ("PHA"). Any State, county, municipality, or other governmental entity or public body (or agency or instrumentality thereof) which is authorized to engage in or assist in the development or operation of housing for low-income families.

Section 8 contract ("Contract"). A written contract between the owner of an eligible project and HUD for providing housing assistance payments to the owner on behalf of eligible families pursuant to this subpart.

Very low-income family. A family whose income does not exceed 50 percent of the median income for the area, as determined by Hud, with adjustments for smaller or larger families.

§ 886.303 Allocation and reservation of section 8 contract authority and budget authority.

(a) The contract authority and budget authority for this program will be provided from the Headquarters reserve authority approved specifically for use in connection with the sale of eligible projects.

(b) Contract and budget authority may be reserved as soon as the Assistant Secretary for Housing—Federal Housing Commissioner approves the project for sale with section 8 assistance, but it shall be reserved no later than the time a project is publicly advertised for sale or the terms of a negotiated sale are agreed upon.

§ 886.304 Project eligibility criteria.

(a) HUD shall select projects for sale with assistance under this subpart on the basis of the final disposition programs developed and approved in accordance with part 290 and the requirements of this subpart. In the evaluation of projects, consideration shall be given to whether there are site occupants who would have to be displaced, whether the relocation of site occupants is feasible, and the degree of hardship which displacement might cause. Greater weight shall be given to projects which do not require displacement, or, where displacement is required which will involve the least amount of hardship.

(b) A project, which is sold pursuant to an agreement that following sale it will be repaired by the owner so as to satisfy the housing quality standards, may be sold with a commitment that section 8 assistance will be provided after the repairs are completed and inspected by HUD.

(c) High-rise elevator projects for families with children will not be assisted under this subpart unless the final disposition program, prepared in accordance with part 290 of chapter II, indicates that there is no practical alternative.

§ 886.305 PHA involvement.

HUD, as part of its loan management activities, performs most of the processing activities normally performed by a PHA in the sction 8 existing housing program. Therefore, duplicative PHA processing activities are not required. However, the PHA with jurisdiction over the area in which the project is located will be invited to authorize evictions for a fee established by HUD and paid by the owner. In addition, the PHA may be invited to perform inspections of dwelling units on a fee basis, where HUD determines that such inspections will be performed more efficiently and economically by the PHA. The contract will be made directly between HUD and the owner with the PHA as a party for the purpose of authorizing evictions, inspections, or for such other purposes as may be agreed upon.

§ 886.306 Notices.

Before a project is approved for sale in accordance with this subpart, the field office manager shall:

(a) Notify in writing the chief executive officer of the unit of general local government in which the project is located (or the designee of that officer) of the proposed sale with housing assistance and afford the unit of local government an opportunity to review and comment upon the proposed sale in accordance with part 891 of this chapter, except that local government review should address consistency with the housing needs and strategy of the community, not strict conformance to the limitations on variations from housing assistance plan goals which are contained in part 891. The contract and budget authority for this program will be provided from the headquarters reserve authority approved specifically for this use.

(b) Notify in writing the PHA with jurisdiction over the area in which the project is located and advise it of HUD's intention to sell the project and to enter into a contract for Section 8 assistance with the purchaser. The notification shall invite the PHA to participate in the contract as provided in § 886.305 and to respond to HUD within 30 calendar days from the date of the notification letter.

§ 886.307 Housing quality standards.

Housing used in this program shall meet the performance requirements set forth in this section. In addition, the housing shall meet the acceptability criteria set forth in this section except for such variations as are approved by HUD. Local climatic conditions and geographic features and local housing and building codes are examples which may justify such variations.

(a) *Sanitary facilities.*—(1) *Performance requirement.* The dwelling unit shall include its own sanitary facilities which are in proper operating condition, can be used in privacy, and are adequate for personal cleanliness and the disposal of human waste.

(2) *Acceptability criteria.* A flush toilet in a separate, private room, a fixed basin with hot and cold running water, and a shower or tub with hot and cold running water shall be present in the dwelling unit, all in proper operating condition. These facilities shall utilize an approved public or private disposal system.

(b) *Food preparation and refuse disposal.*—(1) *Performance requirement.* The dwelling unit shall contain suitable space and equipment to store, prepare, and serve foods in a sanitary manner. There shall be adequate facilities and services for the sanitary disposal of food wastes and refuse, including facilities for temporary storage where necessary.

(2) *Acceptable criteria.* The unit shall contain the following equipment in proper operating condition: Cooking stove or range and a refrigerator of appropriate size for the unit, supplied by either the owner or the family, and a kitchen sink with hot and cold running water. The sink shall drain into an approved public or private system. Adequate space for the storage, preparation, and serving of food shall be provided. There shall be adequate facilities and services for the sanitary disposal of food wastes and refuse, including facilities for temporary storage where necessary (e.g., garbage cans).

(c) *Space and security.*—(1) *Performance requirement.* The dwelling unit

shall afford the family adequate space and security.

(2) *Acceptability criteria.* A living room, kitchen area, and bathroom shall be present; and the dwelling unit shall contain at least one sleeping or living/sleeping room of appropriate size for each two persons. Exterior doors and windows accessible from outside the unit shall be lockable.

(d) *Thermal environment.*—(1) *Performance requirement.* The dwelling unit shall have and be capable of maintaining a thermal environment healthy for the human body.

(2) *Acceptability criteria.* The dwelling unit shall contain safe heating and/or cooling facilities which are in proper operating condition and can provide adequate heat and/or cooling to each room in the dwelling unit appropriate for the climate to assure a healthy living environment. Unvented room heaters which burn gas, oil, or kerosene are unacceptable.

(e) *Illumination and electricity.*—(1) *Performance requirement.* Each room shall have adequate natural or artifical illumination to permit normal indoor activities and to support the health and safety of occupants. Sufficient electrical sources shall be provided to permit use of essential electrical appliances while assuring safety from fire.

(2) *Acceptability criteria.* Living and sleeping rooms shall include at least one window. A ceiling or wall type light fixture shall be present and working in the bathroom and kitchen area. At least two electric outlets, one of which may be an overhead light, shall be present and operable in the living area, kitchen area, and each bedroom area.

(f) *Structure and materials.*—(1) *Performance requirement.* The dwelling unit shall be structurally sound so as not to pose any threat to the health and safety of the occupants and so as to protect the occupants from the environment.

(2) *Acceptability criteria.* Ceilings, walls and floors shall not have any serious defects such as severe bulging or leaning, large holes, loose surface materials, severe buckling or noticeable movement under walking stress, missing parts or other serious damage. The roof structure shall be firm and the roof shall be weathertight. The exterior wall structure and exterior wall surface shall not have any serious defects such as serious leaning, buckling, sagging, cracks or holes, loose siding, or other serious damage. The condition and equipment of interior and exterior stairways, halls, porches, walkways, etc., shall be such as not to present a danger of tripping or falling. Elevators shall be maintained in safe and operating condition.

(g) *Interior air quality.*—(1) *Performance requirement.* The dwelling unit shall be free of pollutants in the air at levels which threaten the health of the occupants.

(2) *Acceptability criteria.* The dwelling unit shall be free from dangerous levels of air pollution from carbon monoxide, sewer gas, fuel gas, dust, and other harmful air pollutants. Air circulation shall be adequate throughout the unit. Bathroom areas shall have at least one openable window or other adequate exhaust ventilation.

(h) *Water supply.*—(1) *Performance requirement.* The water supply shall be free from contamination.

(2) *Acceptability criteria.* The unit shall be served by an approved public or private sanitary water supply.

(i) *Lead-based paint.*—(1) *Performance requirement.* (i) The dwelling unit shall be in compliance with HUD lead-based paint regulations, 24 CFR Part 35, issued pursuant to the Lead Based Paint Poisoning Prevention Act, 42 U.S.C. 4801, and the owner shall provide a certification that the dwelling is in accordance with such HUD regulations.

(ii) If the property was constructed prior to 1950, the family upon occupancy shall have been furnished the notice required by HUD lead-based paint regulations and procedures regarding the hazards of lead-based paint poisoning, the symptoms and treatment of lead poisoning and the precautions to be taken against lead poisoning.

(2) *Acceptability criteria.* Same as performance requirement.

(j) *Access.*—(1) *Performance requirement.* The dwelling unit shall be usable and capable of being maintained without unauthorized use of other private properties, and the building shall provide an alternate means of egress in case of fire.

(2) *Acceptability criteria.* The dwelling unit shall be usable and capable of being maintained without unauthorized use of other private properties. The building shall provide an alternate means of egress in case of fire (such as fire stairs or egress through windows).

(k) *Site and neighborhood.* Where a project is sold with an insured mortgage, the site selection criteria of the insurance program shall be utilized in lieu of the requirements and criteria in this paragraph.

(1) *Performance requirement.* The site and neighborhood shall be reasonably free from disturbing noises and vibrations and other hazards to the health, safety, and general welfare of the occupants.

(2) *Acceptability criteria.* The site and neighborhood shall not be subject to serious adverse environmental conditions, natural or manmade, such as dangerous walks, steps, instability, flooding, poor drainage, septic tank backups, sewage hazards, or mudslides; abnormal air pollution, smoke, or dust; excessive noise, vibration or vehicular traffic; excessive accumulations of trash; vermin or rodent infestation; or fire hazards.

(l) *Sanitary condition.*—(1) *Performance requirement.* The unit and its equipment shall be in sanitary condition.

(2) *Acceptability criteria.* The unit and its equipment shall be free of vermin and rodent infestation.

(m) *Congregate housing.* The foregoing standards shall apply except for paragraph (b) of this section and the requirement in paragraph (c)(2) of this section for a kitchen area. In addition, the following standards shall apply:

(1) The unit shall contain a refrigerator of appropriate size.

(2) The central dining facility and central kitchen shall be located within the building or housing complex and be accessible to the occupants of the congregate units, and shall contain suitable space and equipment to store, prepare and serve food in a sanitary manner by a food service or persons other than the occupants and shall be for the primary use of occupants of the congregate units and be sufficient in size to accommodate such occupants. There shall be adequate facilities and services for the sanitary disposal of food wastes and refuse, including facilities for termporary storage where necessary (e.g., garbage cans).

(n) *Independent group residence.* The foregoing standards shall apply except for paragraphs (a), (b), (c), and (m) of this section. In addition, the following standards shall apply:

(1) The residence shall contain a flush toilet which is readily accessible to all occupants and can be used in privacy, a fixed basin with hot and cold running water, and a shower and/or tub equipped with hot and cold running water all in proper operating condition and adequate for personal cleanliness and the disposal of human wastes. These facilities shall utilize an approved public or private disposal system, and shall be sufficient in number so that they need not be shared by more than four occupants. Those facilities accommodating physically handicapped occupants with wheelchairs or other special equipment shall provide access to all sanitary facilities, and shall provide, as appropriate to needs of the occupants, basins and toilets of appropriate height, grab bars to toilets, showers, and/or bathtubs, shower seats, and adequate space for movement.

(2) The residence shall contain suitable space to store, prepare and serve

foods in a sanitary manner. A cooking stove or range, a refrigerator(s) of appropriate size and in sufficient quantity for the number of occupants, and a kitchen sink with hot and cold running water shall be present in proper operating condition. The sink shall drain into an approved private or public system. Adequate space for the storage, preparation, and serving of food shall be provided. There shall be adequate facilities and services for the sanitary disposal of food wastes and refuse, including facilities for temporary storage where necessary (e.g., garbage cans).

§ 886.308 Maximum total annual contract commitment.

(a) Number of units assisted. Based on the final disposition program developed in accordance with part 290, chapter II, HUD shall determine the number of units to be assisted up to 100 percent of the units in the projects.

(b) The maximum total annual housing assistance payments that may be committed under the contract shall be that amount which, when paid annually over the term of the contract, is determined by HUD to be sufficient to provide for all housing assistance payments and fees under the contract.

(c) In order to assure that housing assistance payments will be increased on a timely basis to cover increases in contract rents or decreases in family incomes:

(1) A project account shall be established and maintained, in an amount as determined by HUD consistent with section 8(c)(6) of the Act, out of amounts by which the maximum annual contract commitment per year exceeds amounts paid under the contract for any year. This account shall be established and maintained by HUD as a specifically identified and segregated account, and payment shall be made therefrom only for the purposes of: (i) housing assistance payments, and (ii) other costs specifically authorized or approved by HUD.

(2) Whenever a HUD-approved estimate of required housing assistance payments for a fiscal year exceeds the maximum annual contract commitment, and would cause the amount in the project account to be less than an amount equal to 40 percent of the maximum annual contract commitment, HUD, within a reasonable period of time, shall take such additional steps authorized by section 8(c)(6) of the Act as may be necessary to carry out this assurance, including (as provided in that section of the Act) "the reservation of annual contibutions authority for the purpose of amending housing assistance contracts or the allocation of a portion of new authorizations for the purpose of amending housing assistance contracts."

§ 886.309 Housing assistance payments to owners.

(a) Housing assistance payments shall be paid to owners for units under lease by eligible families, in accordance with the contract and as provided in this section. These housing assistance payments will cover the difference between the contract rent and the portion of said rent payable by the family as determined in accordance with the HUD-established schedules and criteria. Where the gross family contribution is less than the allowance for utilities and other services, the owner, on behalf of HUD, shall pay the difference to the family.

(b) No section 8 assistance may be provided for any unit occupied by an owner. However, cooperatives are considered rental housing rather than owner-occupied housing under this subpart.

(c) If an eligible family vacates its unit in violation of its lease (other than as a result of action by the owner which is in violation of the lease or the contract or any applicable law), the owner shall receive housing assistance payments in the amount of 80 percent of the contract rent for a vacancy period not exceeding 60 calendar days: *Provided, however,* That if the owner collects any of the family's share of the rent for this period in an amount which, when added to the 80 percent payments, results in more than the contract rent, such excess shall be payable to HUD or as HUD may direct. (See also § 886.315.) The owner shall not be entitled to any payment under this paragraph unless he or she: (1) Immediately upon learning of the vacancy, has notified HUD of the vacancy or prospective vacancy and the reasons for the vacancy, and (2) has made and continues to make a good faith effort to fill the vacancy, including but not limited to, contacting applicants on his waiting list, if any, requesting the PHA and other appropriate sources to refer eligible applicants, and advertising the availability of the unit, and (3) has not rejected any eligible applicant, except for good cause acceptable to HUD.

(d) The owner shall not be entitled to housing assistance payments with respect to vacant units under this section to the extent he or she is entitled to payments from other sources (for example, payments for losses of rental income incurred for holding units vacant for relocatees pursuant to title I of the HCD Act or payments under § 886.315).

§ 886.310 Initial contract rents.

(a) The sum of the contract rents plus an allowance for utilities and other services (where utilities and other services are not included in the contract rent) shall be determined by HUD. This sum shall not exceed the published section 8 fair market rents for existing housing, except as provided in paragraph (b) of this section and except that the fair market rents for existing housing may be exceeded by up to 20 percent where the field office manager determines that special circumstances warrant such higher rents, and such higher rents meet the test of reasonableness in paragraph (c) of this section.

(b) In the case of any project completed not more than 6 years prior to the date of section 8 contract execution, the HUD-determined contract rents plus any allowance for utilities and other services may be as high as 75 percent of the published section 8 fair market rents for new construction. The contract rents may be increased by up to 10 percent if the field office manager determines that special circumstances warrant such higher rents, and such higher rents meet the test of reasonableness in paragraph (c) of this section.

(c) In any case, the HUD-determined contract rents for the project shall not exceed rents which are reasonable for the location, quality, amenities, facilities, and management and maintenance services in relation to the rents paid for comparable units in the private unassisted market, nor shall the contract rents exceed the rents charged by the owner to unassisted families for comparable units. HUD shall maintain for 3 years all relevant documentation under this paragraph.

§ 866.311 Term of contract

The contract term shall not exceed 15 years.

§ 866.312 Rent adjustments.

(a) Housing assistance payments will be made in increased amounts commensurate with contract rent adjustments under this paragraph, up to the maximum amount authorized under the contract. (See § 866.308.)

(b) (1) Automatic annual adjustment factors will be determined by HUD at least annually. Interim revisions may be made as market conditions warrant. Such factors and the basis for their determination will be published in the FEDERAL REGISTER. These published factors will be reduced appropriately by HUD where utilities are paid directly by families.

(2) The contract rents shall be adjusted, at HUD's option, either (i) by applying, on each anniversary date of the contract, the applicable automatic annual adjustment factor most recently published by HUD, or (ii) on the basis of a written request for a rent increase properly supported by substan-

tiating evidence. If HUD requires that the owner submit a written request, HUD within a reasonable time shall approve a rental schedule that is necessary to compensate for any net increase occurring since the last approved rental schedule in taxes (other than income taxes) and operating and maintenance costs over which owners have no effective control, or shall deny the increase stating the reasons therefor. Increases in taxes and maintenance and operating costs shall be measured against levels of such expenses in comparable assisted and unassisted housing to insure that adjustments in the contract rents shall not result in material differences between the rents charged for assisted and comparable unassisted units. Contract rents may be adjusted upward or downward as may be appropriate; however, in no case shall the adjusted rents be less than the contract rents on the effective date of the contract.

(c) Additional adjustments in the contract rents shall be made to the extent HUD determines such adjustments are necessary to reflect increases in the actual and necessary expenses of owning and maintaining the contract units which have resulted from substantial general increases in real property taxes, utility rates or similar costs which are not adequately compensated for by the adjustment authorized by paragraph (b) of this section.

(d) Notwithstanding any other provisions of this subpart, adjustments as provided in this section shall not result in material differences between the rents charged for assisted and comparable unassisted units, as determined by HUD: *Provided, however,* That this limitation shall not be construed to prohibit differences in rents between assisted and comparable unassisted units to the extent that such differences may have existed with respect to the initial contract rents.

(e) Any adjustment in contract rents shall be incorporated into the contract by a dated addendum to the contract establishing the effective date of the adjustment.

§ 886.313 Equal opportunity and fair housing requirements.

Participation in this program requires:

(a) Compliance with (1) title VI of the Civil Rights Act of 1964, title VIII of the Civil Rights Act of 1968, Executive Orders 11063 and 11246, and section 3 of the Housing and Urban Development Act of 1968, and (2) all rules, regulations, and requirements issued pursuant thereto.

(b) Submission of an affirmative fair housing marketing plan.

§ 886.314 Financial default.

In the event of a financial default under the project mortgage, HUD shall have the right to make subsequent housing assistance payments to the mortgagee until such time as the default is cured, or until some other time agreeable to the mortgagee and approved by HUD.

§ 886.315 Security and utility deposits.

(a) An owner may require families to pay a security deposit in an amount equal to 1 month's gross family contribution. If a family vacates its unit, the owner, subject to State and local laws, may utilize the deposit as reimbursement for any unpaid rent or other amount owed under the lease. If the family has provided a security deposit, and it is insufficient for such reimbursement, the owner may claim reimbursement from HUD not to exceed an amount equal to the remainder of 1 month's contract rent. Any reimbursement under this section shall be applied first toward any unpaid rent. If a family vacates the unit owing no rent or other amount under the lease or if such amount is less than the amount of the security deposit, the owner shall refund the full amount of the unused balance, as the case may be, to the family.

(b) In those jurisdictions where interest is payable by the owner on security deposits, the refunded amount shall include the amount of interest payable. All security deposit funds shall be deposited by the owner in a segregated bank account, and the balance of this account, at all times, shall be not less than the total amount collected from tenants then in occupancy, plus any accrued interest. The owner shall comply with all State and local laws regarding interest payments on security deposits.

(c) Families shall be expected to obtain the funds to pay security and utility deposits, if required, from their own resources and/or other private or public sources.

§ 886.316 Establishment of income limit schedules; 30 percent occupancy by very low-income families.

(a) HUD will establish schedules of income limits for determining whether families qualify as lower income families and very low-income families.

(b) In filling vacancies, the owner shall give preference to very low-income families until at least 30 percent of the contract units are occupied by such families. Thereafter, the owner shall exercise his or her best efforts to maintain at least 30 percent occupancy of contract units by very low-income families.

§ 886.317 Establishment of amount of housing assistance payments.

(a) The amount of the housing assistance payment on behalf of an eligible family, to be determined in accordance with schedules and criteria established by HUD, will equal the difference between the gross rent and the gross family contribution computed in accordance with part 889 of this chapter. Where an allowance is established for utilities required to be supplied by the family, and the allowance exceeds the gross family contribution, the owner shall pay to the family each month an amount equal to the difference between the applicable utility allowance and the gross family contribution. The term "large family" means a family which includes six or more minors (other than the head of the family or spouse). The term "very large family" means a family which includes eight or more minors (other than the head of the family or spouse).

§ 886.318 Responsibilities of the owner.

(a) The owner shall be responsible for the management and maintenance of the project in accordance with requirements established by HUD. These responsibilities shall include but not be limited to:

(1) Payment for utilities and services (unless paid directly by the family), insurance and taxes;

(2) Performance of all ordinary and extraordinary maintenance;

(3) Performance of all management functions including the taking of applications, selection of families in accordance with the owner's tenant selection factors approved by HUD, verification of income and other pertinent requirements, and determination of eligibility and amount of family contribution in accordance with HUD-established schedules and criteria;

(4) Collection of family rents;

(5) Preparation and furnishing of information required under the contract;

(6) Reexamination of family income, composition, and extent of exceptional medical or other unusual expenses, and redeterminations, as appropriate, of the amount of family contribution and amount of housing assistance payment in accordance with HUD-established schedules and criteria;

(7) Redeterminations of the amount of family contribution and the amount of housing assistance payment in accordance with HUD-established schedules and criteria as a result of an adjustment by HUD of any applicable allowance for utilities and other services;

(8) Reviewing at least annually the allowance for utilities and other services; and

(9) Compliance with equal opportunity requirements.

(b) Subject to HUD approval, any owner may contract with any private or public entity to perform for a fee the services required by paragraph (a) of this section: *Provided*, That such contract shall not shift any of the owner's responsibilities or obligations.

(c) The owner shall permit HUD to review and audit the management and maintenance of the project at any time.

§ 886.319 Responsibility for contract administration.

HUD is responsible for administration of the contract.

§ 866.320 Default under the contract.

The contract shall contain a provision to the effect that if HUD determines that the owner is in default under the contract, HUD shall notify the owner of the actions required to be taken to cure the default and of the remedies to be applied by HUD including recovery of overpayments, where appropriate, and that if the owner fails to cure the default within a reasonable time as determined by HUD, HUD has the right to terminate the contract or to take other corrective action, including recision of the sale. Where the project is sold under an arrangement that involves a regulatory agreement between HUD and the owner, a default under the regulatory agreement shall be treated as default under the contract.

§ 886.321 Marketing.

(a) Marketing of units and selection of families by the owner shall be in accordance with the owner's HUD-approved affirmative fair housing marketing plan, and with all regulations relating to fair housing advertising including use of the equal opportunity logotype, statement, and slogan in all advertising. Projects shall be managed and operated without regard to race, color, creed, religion, sex, or national origin.

(b) (1) HUD shall determine the eligibility for assistance of families in occupancy at the time of sale. The owner shall be responsible for determination of eligibility of applicants for tenancy after sale, selection of families from among those determined to be eligible, and computation of the amount of housing assistance payments on behalf of each selected family, in accordance with the gross rent and the gross family contribution computed in accordance with part 889 of this chapter. Where an allowance is established for utilities required to be supplied by the family, and the allowance exceeds the gross family contribution, the owner shall pay to the family each month an amount equal to the difference between the applicable utility allowance and the gross family contribution. In establishing criteria for the selection of applicants to fill vacancies existing after the effective date of this contract, no local residency requirements or priority systems relating to place of residence may be applied to applicants.

(2) For every family that applies for admission, the owner and the applicant shall complete and sign the form of application prescribed by HUD. When the owner decides to no longer accept applications from applicants, the owner shall publish a notice to that effect in a publication likely to be read by applicants. The notice should state the reasons for the owner's refusal to accept additional applications. When the owner agrees to accept applications again, a notice to this effect should also be published. The owner shall retain copies of all completed applications together with any related correspondence for 3 years. For each family selected for admission, the owner shall submit one copy of the completed and signed application to HUD. Housing assistance payments will not be made on behalf of an admitted family until after this copy has been received by HUD.

(3) If the owner determines that the applicant is eligible on the basis of income and family composition and is otherwise acceptable but the owner does not have a suitable unit to offer, the owner shall place such family on the waiting list and so advise the family.

(4) If the owner determines that the applicant is eligible on the basis of income and family composition and is otherwise acceptable and if the owner has a suitable unit, the owner and the family shall enter into a lease. The lease shall be on the form approved by HUD and shall otherwise be in conformity with the provisions of this subpart.

(5) Records on applicant families and approved families shall be maintained by the owner so as to provide HUD with racial, ethnic, and gender data and shall be retained by the owner for 3 years.

(6) If the owner determines that an applicant is not eligible, or if eligible, not selected, the owner shall notify the applicant of the determination and the reasons upon which the determination is made.

(7) When a PHA becomes an owner under this program: (i) If the PHA places a family on its waiting list, it shall notify the family of the approximate date of availability of a suitable unit insofar as such date can be reasonably determined, and (ii) if the PHA determines that an applicant is ineligible on the basis of income or family composition, or that the PHA is not selecting the applicant for other reasons, the PHA shall promptly send the applicant a letter notifying him/her of the determination and the reasons and that the applicant has the right within a reasonable time (specified in the letter) to request an informal hearing. If, after conducting such an informal hearing, the PHA determines that the applicant shall not be admitted, the PHA shall so notify the applicant in writing and such notice shall inform the applicant that he/she has the right to request a review by HUD of the PHA's determination. The procedures of this subparagraph do not preclude the applicant from exercising his/her other rights if he/she believes he/she is being discriminated against on the basis of race, color, creed, religion, sex, or national origin. The PHA shall retain for 3 years a copy of the application, the letter, the applicant's response if any, the record of any informal hearing, and a statement of final disposition.

§ 886.322 Lease requirements.

The lease shall contain all required provisions specified in paragraph (b) of this section and none of the prohibited provisions listed in paragraph (c) of this section. It also shall reflect the requirements of part 450, subpart A of chapter IV, and shall otherwise conform to the form of lease approved by HUD.

(a) The term of the lease shall be for not more than 1 year.

(b) Required provisions. The lease between the owner and the family shall contain the following provisions:

Addendum to lease. The following additional lease provisions are incorporated in full in the lease between ——— (owner) and ——— (family) for the following dwelling unit: ———. In case of any conflict between these and any other provisions of the lease, these provisions shall prevail.

1. The total rent shall be $—— per month.

2. Of the total rent, $—— shall be payable by or at the direction of the Department of Housing and Urban Development ("HUD") as housing assistance payments on behalf of the family and $—— shall be payable by the family. These amounts shall be subject to change by reason of changes in the family's income, composition, or extent of exceptional medical or other unusual expenses, in accordance with HUD-established schedules and criteria; or by reason of adjustment by HUD of any applicable allowance for utilities and other services. Any such change shall be effective as of the date stated in a notification to the family.

3. The owner shall not discriminate against the family in the provision of services, or in any other manner, on the grounds of race, color, creed, religion, sex, or national origin.

4. The owner shall provide the following utilities, services, and maintenance:

———

———

5. The owner shall not evict the family unless the owner complies with the requirements of local law, if any, and of HUD regulations. The owner shall give the family a written notice of the proposed eviction, stating the grounds and advising the family that it has 15 days (or such greater number, if any, that may be required) within which to respond to the owner.

6. Because the owner must obtain HUD's authorization for an eviction, a copy of the notice shall be furnished simultaneously to HUD. The notice shall also state that the family may, within the same time period, present objections in writing or in person to HUD. HUD shall forthwith examine the grounds for eviction and shall authorize the eviction unless it finds the grounds to be insufficient under the lease. HUD shall make a good faith effort to notify the owner and the family of its determination within 30 calendar days of the date of the notice to the family whether or not the family has presented objections to HUD.

(c) Where a PHA is a party to the contract between HUD and the owner, the PHA shall assume the responsibilities of HUD under (b)(6) of this section. The PHA shall be entitled to a fee as provided in the contract for each proposed eviction action submitted by the owner and reviewed by the PHA.

(d) Lease clauses which as determined by HUD fall within the classifications listed below shall not be included in any lease.

(1) *Confession of judgment.* Consent by the family to be sued, to admit guilt, or to accept without question any judgment favoring the owner in a lawsuit brought in connection with the lease.

(2) *Seize or hold property for rent or other charges.* Authorization to the owner to take property of the family and/or hold it until the family meets any obligation which the owner has determined the family has failed to perform.

(3) *Exculpatory clause.* Prior agreement by the family not to hold the owner or its agents legally responsible for acts done improperly or for failure to act when it was required to do so.

(4) *Waiver of legal notice.* Agreement by the family that the owner need not give any notices in connection with (i) a lawsuit against the family for eviction, money damages, or other purpose, or (ii) any other action affecting the family's rights under the lease.

(5) *Waiver of legal proceedings.* Agreement by the family to allow eviction without a court determination.

(6) *Waiver of jury trial.* Authorization to the owner's lawyer to give up the family's right to trial by jury.

(7) *Waiver of right to appeal court decision.* Authorization to the owner's lawyer to give up the family's right to appeal a decision on the ground of judicial error or to give up the family's right to sue to prevent a judgment from being put into effect.

(8) *Family chargeable with cost of legal actions regardless of outcome of lawsuit.* Agreement by the family to pay lawyer's fees or other legal costs whenever the owner decides to sue the family, whether or not the family wins.

§ 886.323 Maintenance, operation, and inspections.

(a) The owner shall maintain and operate the project so as to provide decent, safe, and sanitary housing and the owner shall provide all the services, maintenance, and utilities which he or she agrees to provide under the contract and the lease. Failure to do so shall be considered a material default under the contract.

(b) Prior to execution of the contract, HUD shall inspect (or cause to be inspected) each contract unit and related facilities to insure that they are in decent, safe, and sanitary condition.

(c) Prior to occupancy of any vacant unit by a family, the owner and the family shall inspect the unit and both shall certify that they have inspected the unit and have determined it to be decent, safe, and sanitary in accordance with the criteria provided in the prescribed forms. Copies of these reports shall be kept on file by the owner for at least 3 years.

(d) HUD will inspect the project (or cause it to be inspected) at least annually and at such other times as HUD may determine to be necessary to assure that the owner is meeting his or her obligation to maintain the units and the related facilities in decent, safe, and sanitary condition and to provide the agreed-upon utilities and other services. HUD will take into account complaints by occupants and any other information coming to its attention in scheduling inspections and shall notify the owner and the family of its determination regarding the condition of the units.

(e) If HUD notifies the owner that he/she has failed to maintain a dwelling unit in decent, safe, and sanitary condition, and the owner fails to take corrective action within the time prescribed in the notice, HUD may exercise any of its right or remedies under the contract, including abatement of housing assistance payments, even if the family continues to occupy the unit. If, however, the family wishes to be rehoused in another dwelling unit with section 8 assistance and HUD does not have other section 8 authority for such purposes, HUD may use the recaptured authority for the purpose of rehousing the family in another dwelling unit. Where this is done, the owner shall be notified that he/she will be entitled to resumption of housing assistance payments for the vacated dwelling unit if:

(1) The unit is restored to decent, safe, and sanitary condition;

(2) The family is willing to and does move back to the restored dwelling unit; and

(3) A deduction is made for the expenses incurred by the family for both moves.

§ 886.324 Reexamination of family income, composition, and extent of exceptional medical or other unusual expenses.

(a) Reexamination of family income, composition, and the extent of medical or other unusual expenses incurred by the family shall be made by the owner at least annually (except that such reviews may be made at intervals no longer than 2 years in the case of families with an elderly head of household), and appropriate redeterminations shall be made by the owner of the amount of the gross family contribution and the amount of the housing assistance payment, all in accordance with schedules and criteria established by HUD.

(b) A family's eligibility for housing assistance payments shall continue until the amount payable by the family equals the gross rent for the dwelling unit it occupies. However, the termination of eligibility at such point shall not affect the family's other rights under its lease nor shall such termination preclude resumption of payments as a result of subsequent changes in income or rents or other relevant circumstances during the term of the contract. A family may at any time request a redetermination of its gross family contribution on the basis of changes in family income or other relevant circumstances.

§ 886.325 Overcrowded and underoccupied units.

(a) The family shall notify the owner and HUD of a change in family composition and shall transfer to an appropriate size dwelling unit, based on family composition, upon appropriate notice by the owner or HUD that such a dwelling unit is available.

(b) Upon receipt by the owner of a notification by the family of a change in the family size, the owner agrees to offer the family a suitable unit as soon as one becomes vacant and ready for occupancy. If the owner does not have any suitable units or if no vacancy of a suitable unit occurs within a reasonable time, HUD may assist the family in finding a suitable dwelling unit and require the family to move to such unit as soon as possible.

(c) If the owner fails to offer the family a unit appropriate for the size of the family when such unit becomes vacant and ready for occupancy, HUD

may abate housing assistance payments to the owner for the unit occupied by the family and assist the family in finding a suitable dwelling unit elsewhere.

§ 886.326 Adjustment of allowance for utilities and other services.

HUD shall determine, as part of its annual inspection and at such other times as it deems appropriate, whether an adjustment is required in the allowance for utilities and other services applicable to the dwelling units in the project on grounds of changes in utility rates or other change of general applicability to all units in the project. If HUD determines that an adjustment should be made, HUD shall prescribe the amount of the adjustment and direct the owner to make a corresponding adjustment promptly in the amount of rent to be paid by the affected families and the amount of housing assistance payment.

§ 886.327 Inapplicability of low-income public housing model lease and grievance procedures.

Model lease and grievance procedures established by HUD for PHA-owned low-income public housing are applicable only to PHA-owned projects operated under section 8 commitments pursuant to this subpart.

§ 886.328 Evictions.

(a) The owner shall not evict the family unless the owner complies with the requirements of local law, if any, and of HUD regulations governing tenant eviction procedures, Part 450, Subpart A of Chapter IV, as modified by this section. The owner shall give the family a written notice of the proposed eviction, stating the grounds and advising the family that it has 15 calendar days (or such greater number, if any, that may be required by local law) within which to respond to the owner. The notice shall also state that the family may, within the same time period, present its objections to HUD in writing or in person.

(b) The owner must obtain HUD's authorization for an eviction; accordingly, a copy of the notice shall be furnished simultaneously to HUD. HUD shall forthwith examine the grounds for eviction and shall authorize the eviction unless it finds the grounds to be insufficient. HUD shall make a good faith effort to notify the owner and the family of its determination within 30 days of the date of the notice to the family, whether or not the family has presented objections to HUD.

(c) Where the PHA is a party to the contract between the owner and HUD for the purpose of authorizing evictions, the PHA shall assume the responsibilities of HUD under paragraph (b) of this section. In this situation a copy of the notice of the proposed eviction shall be sent to the PHA. The PHA shall be entitled to a fee as provided in the contract for each proposed eviction action submitted by the owner and reviewed by the PHA.

§ 886.329 Reduction of number of contract units for failure to lease to eligible families.

(a) If at any time, beginning 6 months after the effective date of the contract, the owner fails for a continuous period of 6 months to have all of the contract units leased or available for leasing by eligible families, HUD may on 30 calendar days notice reduce the number of contract units to not less than the number of contract units under lease or available for leasing by eligible families, plus 10 percent of such number if the number is 10 or more, rounded to the next highest number. Failure by the owner to make a reasonable effort to lease the contract units to eligible families shall be considered a material default under the contract.

(b) At the end of the initial term of the contract and of each renewal term, HUD may, by notice to the owner, reduce the number of contract units to not less than (1) The number of contract units under lease by eligible families or available for leasing by eligible families at that time, or (2) the average number of contract units so leased or available for leasing during the past 12-month period, whichever is the greatest number, plus 10 percent of such number if the number is 10 or more, rounded to the next highest number.

(c) HUD will agree to an amendment of the contract, as appropriate, to provide for subsequent restoration of any reduction made pursuant to paragraph (a) or (b) of this section if HUD determines that the restoration is justified as a result of changes in demand and in the light of the owner's record of compliance with his or her obligations under the contract and if annual contributions contract and budget authority are available.

§ 886.330 HUD review of contract compliance.

HUD will review project operations at such intervals as it deems necessary to insure that the owner is in full compliance with the terms and conditions of the contract. The equal opportunity review may be conducted with the scheduled HUD review or at any time deemed appropriate by HUD.

(Sec. 7(d), Department of Housing and Urban Development Act (42 U.S.C. 3535(d)); sec. 5(b) of the United States Housing Act of 1937 (42 U.S.C. 1437c(b)); section 8 of the United States Housing Act of 1937 (42 U.S.C. 1437f).)

Issued at Washington, D.C., September 6, 1978.

MORTON A. BARUCH,
Acting Assistant Secretary for Housing, Federal Housing Commissioner.

[FR Doc. 78-25547 Filed 9-8-78; 8:45 am]

federal register

MONDAY, SEPTEMBER 11, 1978

PART V

THE NATIONAL ARCHIVES OF THE UNITED STATES • 1934 •

ENVIRONMENTAL PROTECTION AGENCY

AIR QUALITY CONTROL REGIONS, CRITERIA, AND CONTROL TECHNIQUES

Attainment Status Designations

[6560-01]

Title 40—Protection of Environment

[FRL 958-4]

CHAPTER I—ENVIRONMENTAL PROTECTION AGENCY

SUBCHAPTER C—AIR PROGRAMS

PART 81—AIR QUALITY CONTROL REGIONS, CRITERIA, AND CONTROL TECHNIQUES

Attainment Status Designations

AGENCY: Environmental Protection Agency.

ACTION: Final rule.

SUMMARY: The Environmental Protection Agency (EPA) was required, under the Clean Air Act Amendments of 1977, to publish on a State-by-State, pollutant-by-pollutant basis the attainment status of all areas within the States in relation to the national ambient air quality standards (NAAQS) as submitted by the States and approved, or as designated by EPA (43 FR 8962, March 3, 1978). Both the State and EPA can initiate changes to these designations but any State redes- ignation must be submitted to EPA for concurrence. This final rule amends the designations for areas of certain States by indicating whether the areas attain the national ambient air quality standards.

In addition, the preamble states EPA's position on certain general issues raised in comments on the original designations of areas in these or other States. Copies of the comments submitted are available at the appropriate EPA Regional Offices.

EFFECTIVE DATE: September 11, 1978.

FOR FURTHER INFORMATION CONTACT:

Lanny M. Deal, U.S. Environmental Protection Agency, Research Triangle Park, N.C. 27711, telephone 919-541-5365, or FTS-629-5365.

SUPPLEMENTARY INFORMATION: The Clean Air Act Amendments of 1977 (the 1977 amendments), Pub. L. 95-95, added to the Clean Air Act (the act) a new section 107(d), which directed each State to submit to the Administrator a list of the NAAQS attainment status of all areas within the State. The Administrator was required under section 107(d)(2) of the act to promulgate the State lists, with any necessary modifications. For each standard, areas are designated as either not meeting the standard (nonattainment areas), meeting the standard (attainment areas), or lacking sufficient data to be classified (unclassifiable areas). EPA published these lists in the FEDERAL REGISTER on March 3, 1978, 43 FR 8962, and invited the public to submit comments to the Agency by May 2, 1978.

This FEDERAL REGISTER notice serves essentially two purposes. First, the preamble to this rulemaking states EPA's position on certain general issues raised in comments on the designations in all parts of the country. This discussion will serve as part of the response to comments for every State, including those whose designations are not specifically discussed in this publication.

Second, EPA makes necessary amendments to the designations for the following States, and responds to comments applicable specifically to these States:

EPA Region I:
Connecticut, Massachusetts, and New Hampshire.
EPA Region IV:
Alabama, Florida, Georgia, Kentucky, North Carolina, and Tennessee.
EPA Region VI:
Arkansas, Louisiana, New Mexico, Oklahoma, and Texas.
EPA Region VIII:
Colorado, Montana, North Dakota, and Utah.
EPA Region X:
Idaho and Washington.

All States are not included in this publication because the volume of specific comments varied widely among various regions of the country. Certain EPA Regional Offices could therefore finish preparing FEDERAL REGISTER documents responding to comments and amending designations sooner than others. Rather than delaying publication of all documents until the last one is completed, EPA is now publishing those documents that are ready, and will publish the remaining documents as soon as they are completed.

The designations promulgated on March 3, as amended today, are final but can be further amended if necessary. Under section 107(d)(5) of the act, a State may from time to time revise and resubmit its list of designations, and EPA must then promulgate the revised list with such modifications as the Agency deems necessary. Furthermore, even without State submittal of a revised list, the Agency can modify the current list of designations if necessary, under section 107(d)(2). To have any designation amended, a person should submit a petition with supporting data and analysis to the State, with a copy to the appropriate EPA Regional Office. If the person is not satisfied with the State's response to the petition, he may then petition the appropriate EPA Regional Office to modify the current list.[1]

The amendments to designations are being made effective immediately, for good cause. As discussed below, the principal effect of these designations is to identify problem areas for which State air quality planning must be completed by a statutory deadline. These designations impose no additional obligation on any source. Deferring the effective date is therefore unnecessary.

The general issues raised in the comments are discussed below under the following headings: (A) Geographic Impact of Designations; (B) Use of Projected Future Air Quality; (C) Relationship of Designations to Supplementary Control Systems (SCS); (D) Total Suspended Particulates (TSP) and Standing Air Monitoring Work Group (SAMWG) Guidelines; and (E) Procedural Objections. Comments also raised general issues concerning the size and regulatory effect of designations for photochemical oxidants (ozone). EPA's response to these comments is under preparation and will be published shortly.

Following the discussion of general issues are the responses to specific comments and amendments to designations for States in EPA Regions I, IV, VI, VIII, and X. Today's rulemaking action in no way affects those designations made on March 3, 1978, for which no comments were received during the public comment period.

I. GENERAL ISSUES

A. EFFECT OF DESIGNATIONS ON CLEAN AIR ACT REQUIREMENTS

Several commenters discussed the effect of attainment status designations on individual stationary sources of pollution. The commenters often assumed that every source within a designated nonattainment area would be subject to stringent nonattainment requirements and that every source within a designated attainment or unclassifiable area would be subject to less stringent prevention of significant deterioration (PSD) requirements. However, this is an oversimplification that does not accurately reflect the requirements of the Act.

1. General purpose and effect of designations

The purpose of the designations is to identify air quality problem areas for which the States and EPA must seek solutions. As EPA stated in the March 3 promulgation, "[t]he section 107(d) designations are meant to provide a starting point for States in their efforts to correct existing air quality problems and to implement programs under the 1977 Clean Air Act (CAA) Amendments."[2] The area designation, whether nonattainment, attainment, or unclassifiable, thus does not in and

[1] The addresses of all EPA Regional Offices are printed in the March 3 FEDERAL REGISTER notice, 43 FR 8962.

[2] 43 FR 8963 col. 2.

by itself dictate the applicable new or existing source requirements. There are essentially three reasons for this.

First, because air pollution emissions are transported from one area to another, the sources that cause or contribute to a violation, or affect a clean locality, may be in different locations from the violation or clean locality itself. Controls will therefore often have to apply to sources outside of the area that the controls are intended to protect.

Second, States may choose to impose requirements over a broader or narrower geographic region than the precise area where sources exist that directly contribute to particular concentrations of a pollutant. For example, for reasons of equity, simplicity of administration, or to allow more growth in clean areas, States may choose to make their revised emission limitations applicable statewide, rather than restricting the requirement to sources that directly cause or contribute to violations.

Finally, section 107(d) of the Act provides that attainment status designations were to be made within a very short time period, and were to be composed of air quality control regions (or portions thereof), which are often based on State, county, or other political jurisdictional boundaries. This process is bound to include pockets where the air quality does not correspond to the designation of the area. These anomalies can be taken into account in the more elaborate and thorough proceedings required under the Act for development of plans and issuance of individual permits.

2. Effect of designations, on particular Clean Air Act requirements

EPA's promulgations and policy statements implementing the Act's requirements for individual sources are set forth in several FEDERAL REGISTER notices.[3] The following summary of the requirements applicable to individual sources is provided to correct the misunderstandings expressed in the comments, and to set the attainment status designations in perspective.

a. State Implementation Plan Revisions

Under sections 171(2) and 172 of the Act, a State must revise its State implementation plan (SIP) to provide for attainment (nonattaiment plan), as expeditiously as practicable but no later than certain specified deadlines, in any area designated as nonattainment. Under sections 101(b)(1) and 161 of the Act, a State must submit a plan revision to prevent significant deterioration (PSD plan) in any area where the air quality is better than the standards, regardless of the applicable designations. Since States have substantial latitude to meet these objectives, and can develop plans even more stringent than necessary to meet the objectives, it is impossible to determine now what sources will be affected by the SIP development process initiated by these designations.

For every nonattainment area, a nonattainment plan (SIP) must be adopted that (among other things) requires permits for the construction and operation of major new sources and major modifications. In addition, the plan must require sufficiently stringent control technology so that attainment is demonstrated as expeditiously as practicable but no later than the statutory deadlines. Prior to attainment, the plan must also demonstrate reasonable further progress toward attainment. States will establish the requirements to which existing sources in and adjacent to nonattainment areas will be subject after they have had an opportunity to study the cause of the nonattainment problem and conduct the analysis necessary to devise a solution.

A State must also prepare a PSD plan to require, among other things, permits for every major new source or major modification that affects the air quality of areas presently cleaner than the standards. A PSD plan must also provide that the necessary emission reductions will be obtained where the air quality increment has been, or will be, exceeded. The protection of air quality increments in clean localities must always be a consideration whenever a major new source wishes to construct, regardless of the applicable designation.

b. EPA Promulgated New Source Review Requirements

In addition to the requirements for nonattainment and PSD plan revisions, the 1977 amendments generally ratified the new source review requirements established by EPA for localities where ambient standards are violated (the Emission Offsets Interpretative Ruling) and localities cleaner than the standards (the PSD regulations). New PSD regulations superseding those previously in effect were recently promulgated and the Emission Offsets Interpretative Ruling is about to be revised.[4] At least one of these two administrative approaches applies regardless of designations of attainment status.

The Emission Offsets Interpretative Ruling imposes stringent conditions on any proposed major source or major modification that will cause or significantly contribute to a violation of a standard, regardless of the designation applicable to the locality where the source or the violation is found. If a source will cause or significantly contribute to a violation, even if the source, the violation, or both, are located in areas originally designated as attainment or unclassifiable, the Emission Offsets Interpretative Ruling will apply. Likewise, the PSD regulations apply to any source or modification that affects air quality cleaner than the standards, regardless of the applicable designation.

For any nonattainment area, the Emission Offsets Interpretative Ruling will be superseded when an approved or promulgated nonattainment plan comes into effect. Likewise, EPA's PSD regulations will be superseded when a State PSD plan is approved. Further, for any designated nonattainment area without an adequate approved or promulgated nonattainment plan, the conditions of the Emission Offsets Interpretative Ruling will be replaced with a ban on new construction after June 30, 1979, when the requirements of State nonattainment plans are to be in effect.

The ban on construction will apply to any major new source or major modification that will cause or significantly contribute to an air quality violation within the nonattainment area.

B. USE OF PROJECTED FUTURE VIOLATIONS

Several commenters questioned EPA's policy on the use of projected future violations in making nonattainment designations. On the basis of those comments, EPA has clarified its policy and is altering certain designations accordingly.

In California, where certain nonattainment designations were based on projected future violations, commenters objected that this was contrary to the EPA guidance generally available. In Valdez, the Alaska Department of Environmental Conservation has requested a nonattainment designation for a presently clean but imminently dirty area. After reviewing the Act and its legislative history, EPA has determined that projections of future violations may provide the basis of nonattainment designations, but only in certain limited circumstances.

Under sections 171(2) and 172, nonattainment areas where SIP revisions are required, are defined as areas that currently exceed any NAAQS, including any areas identified under paragraphs (A) through (C) of section

[3] *See, e.g.*, 43 FR 26380-410, June 19, 1978 (PSD new source review and State plan requirements); 43 FR 21673-77, May 19, 1978 (nonattainment State plan requirements); forthcoming revision of the Emission Offsets Interpretative Ruling, originally published at 41 FR 55524, Dec. 21, 1976.

[4] The Emission Offsets Interpretative Ruling is found at 41 FR 55528-30, and will soon be revised and recodified at 40 CFR Part 51, Appendix S. The PSD regulations are found at 40 CFR 52.21, as revised at 43 FR 26403, June 19, 1978.

107(d)(1). Areas are to be identified under paragraphs (A) through (C) if they either do not meet a standard, or in the judgement of the State may not attain or maintain the primary standard for sulfur dioxide (SO_2) or total suspended particulate matter (TSP). These statutory provisions set up two criteria for determining nonattainment areas. Any area that currently violates the standard is to be designated as nonattainment, and any area where in the State's judgment the primary standard for SO_2 or TSP may not be maintained may also be designated as nonattainment.

It is initially the State's option whether to designate a clean area as nonattainment because the primary SO_2 or TSP standard may not be maintained. However, EPA must modify the State's nonattainment designation if necessary. The State must submit to EPA the information and analysis on which the State based its judgment that the standard would not be maintained.

Applying a nonattainment designation to clean areas where future violations are projected will further the purposes of the nonattainment provisions of the Act. The effect of designating an area as a nonattainment area, as discussed above, is to require the State to develop a nonattainment plan. Where the State concludes that a violation of the standard may be imminent, planning to assure attainment and satisfy the other requirements for a nonattainment plan is essential.

In an area where the standard is generallly violated and a nonattainment plan is required, there will ordinarily be few pockets with clean air where PSD requirements would apply. However, in an area that is now clean but is designated as nonattainment because the State projects future violations, PSD requirements may govern the entire area. Unless the increased emissions expected to cause violations are part of the PSD baseline concentration upon which growth in PSD areas is calculated,[5] clean areas where violations are projected for the future must also protect a PSD increment that may be substantially more stringent than the standard. For such areas, the State plan must not only provide for attainment of the NAAQS but also protect any available PSD increment.

C. RELATIONSHIP OF DESIGNATIONS TO SCS

Some commenters questioned the Agency's legal authority to designate areas nonattainment in instances where sources were employing dispersion techniques in place of SIP emission limitations to prevent concentrations of pollution that exceed the standards. Congress has forbidden use of dispersion techniques, such as tall stacks or SCS which vary with atmospheric conditions as a substitute for required constant control techniques in SIP's.[6] Areas relying on dispersion in this way must be viewed as not attaining the standards.

The statute requires that the quantity, rate, or concentration of emissions be limited on a continuous basis by use of "emission limitations" or constant control techniques.[7] Dispersion techniques do not reduce total emissions on a continuous basis; rather, emissions are dispersed over a wide area by use of a stack higher than required by good engineering practice, or the rate of emissions is varied according to atmospheric conditions by use of an intermittent or supplemental control system. These dispersion techniques are designed to permit emissions up to a level that will not result in ground level pollutant concentrations exceeding the ambient standards.

In the 1977 amendments, Congress expressly affirmed that dispersion techniques may not be used as a replacement for the constant controls required to attain standards. No State plan may provide for attainment of the standards by means of dispersion techniques, and no State may insure attainment by approving use of dispersion techniques. Therefore, any area where sources are using dispersion to prevent pollution concentrations that exceed standards, instead of complying with emission limitations required in SIP's, must be viewed as an area where the standards are not being attained.

By applying a nonattainment designation to areas where sources are using dispersion techniques to avoid pollution concentrations that would violate standards, EPA is forwarding the congressional purposes in enacting the nonattainment requirements. Congress was concerned with the failure of many areas to attain the air quality mandated in the Act. With the nonattainment provisions applied to areas where dispersion techniques are impermissibly used to avoid pollution concentrations in excess of standards, States will be pressed to commit themselves to implement and enforce the constant controls necessary for attainment and maintenance.[8] Where the necessary constant controls are not being used so that impermissible amounts of pollution are being emitted, further construction would be restricted.[9] The application of nonattainment requirements to areas in which dispersion techniques are used to avoid impermissible concentrations forces States to bring sources into compliance with emission limitations and insures that national standards will be met through constant controls as Congress intended.

D. TSP MONITORING SITING AND SAMWG GUIDELINES

Several States interpreted EPA guidance as allowing the exclusion for the purposes of attainment status designations of all monitoring data for TSP collected at sites not in accordance with the SAMWG guidelines that were proposed on August 7, 1978, as appendix E to 40 CFR part 58.[10] Only those monitoring sites which are unduly influenced by reentrained road dust can be excluded in establishing both the design values for SIP development work and for designation purposes. Thus, it was not the intent, nor is it current Agency policy, that only those monitoring sites which precisely meet the height and distance criteria of the SAMWG guidelines be used for SIP development and attainment status designation purposes.

The SAMWG siting guidelines are intended to promote uniformity in locations of new monitoring stations and also to encourage States to classify existing monitors in terms of the types of activities impacting the air quality at each site. Thus, existing stations showing nonattainment of the NAAQS should be examined not only in terms of the proposed siting criteria but also in terms of those factors causing high TSP concentrations. EPA has proposed regulations on this subject stating that there are situations in which data from existing monitors located in the so-called "unacceptable" zone may still be useful. For example, monitoring sites near roadways where traffic is less than several thousand vehicles per day would not necessarily have to be located at the prescribed distances from roadways.

For sites not located in conformance with the proposed guidelines, and evaluation could be conducted to determine the roadway influence. The purpose of this evaluation would be to consider contentions regarding improper siting of monitors and specifi-

[5] PSD "baseline concentration" is defined at 40 CFR 51.24(b)(11), and its importance in determining ambient air increments is stated at 40 CFR 51.24(c), as revised 43 FR 26383-384 (June 19, 1978).

[6] *See* Section 123 of the Act, 42 U.S.C. This prohibition does not apply to stack heights in existence or dispersion techniques implemented before Dec. 31, 1970. *See also* Conference report to accompany H.R. 6161, H. Rept. No. 95-564, 95th Cong., *1st sess.* 144 (Aug. 3, 1977); section 110(a)(2)(B) of the Act, 42 U.S.C. 7410(a)(2)(B).

[7] *See* section 302(k) of the Act, 42 U.S.C. 7602(k).

[8] *See* sections 172(b) (7) and (10) of the Act, 42 U.S.C. 7502(b) (7) and (10).

[9] Section 173(4) of the Act, 42 U.S.C. 7503(4).

[10] U.S. Environmental Protection Agency, Standing Air Monitoring Work Group, "Air Monitoring Strategy for State Implementation Plans" (Publication No. EPA 450/2-77-010, June 1977). Proposed in the FEDERAL REGISTER dated August 7, 1978, on page 34892 as appendix E to 40 CFR part 58.

cally to decide if the roadway influence is significant enough to warrant disregarding or modifying the air quality data from the monitor. If this is found to be the case, the designation status can be revised to unclassifiable provided no other monitoring or modeling data exists which supports the nonattainment designation. An exception is if the suspect monitoring site is impacted by a point source (or sources). Air quality dispersion modeling must be performed to determine if the source(s) would result in an ambient violation. If, in fact, the source(s) does contribute emissions such that air quality levels in excess of the ambient standards are estimated to exist, the nonattainment designation of the area in question should be retained and the estimated air quality level should be employed for SIP development purposes.

E. PROCEDURAL OBJECTIONS

Many commenters criticized the administrative procedures followed by the Agency in promulgating the March 3, 1978, area designations. The criticism focused on the Agency's decision to make the designations effective before soliciting public comment. However, EPA had good reason for using the method it did, no one was prejudiced by it, and the opportunity to submit comments subsequent to the March 3 designations has mooted any possible objections to the procedures.

As explained in detail above, the principal purpose of the March 3 designations was to identify the areas of the country for which the States must begin development of nonattainment plans. EPA explained in the March 3 notice that States' obligation to meet the tight deadlines under the Act "requires that the States have immediate guidance as to the attainment status of the areas designated under section 107(d). . . . Under these circumstances it would be impracticable and contrary to the public interest to ignore the statutory schedule and postpone publishing these regulations until notice and comment can be effectuated." [11] For these reasons, the Administrator adopted the procedural approach of promulgating the designations as immediately effective but simultaneously soliciting comment on those decisions.

By making the designations immediately effective, EPA gave the States the benefit of its immediate judgment so that they could move forward with developing the necessary plans required 9 months later. By simultaneously soliciting comment, EPA provided an opportunity for the public comment on these initial decisions, and provided for later prompt revision of the designations.

Since the designations will not cause additional requirements for emission reductions to apply until after the required State plans are approved or promulgated by EPA, the decision to make the designations immediately effective placed no additional burden on any party. When this process is concluded, EPA will have fully invited and responded to public comment, will have corrected improper designations, will have provided States the greatest possible lead time for submitting their required nonattainment plans, and will have imposed no hardship on any source.

Some commenters also raised the objection that States did not hold public hearings on the designations before making their submittals to EPA. However, EPA has no authority to review the procedures used by the States in developing the lists. Unlike sections 110 and 172 of the Act, which require States to hold hearings and engage in other public procedures before adopting State implementation plans, section 107(d) of the Act does not specify procedural requirements for the States. EPA did encourage States to involve the public in this process as much as time allowed. Many States held public meetings, and some made extensive coordination efforts with affected local governments. However, even in the absence of these efforts, EPA's procedures gave the public adequate opportunity to participate in the establishment of designations, and fully satisfied any legal requirements for public participation.

II. REGIONAL DISCUSSION

REGION I

New Hampshire

The Agency received comments challenging specific portions of the SO_2 and TSP nonattainment designations in New Hampshire. The area designations in question have been reviewed by EPA. The conclusion reached was that the data base supporting the designations is both accurate and valid, and that revisions to the designations are not supported at the present time.

Massachusetts

Regarding the TSP designations for Massachusetts, the table is revised to include, for each air quality control region (AQCR), the statement "all other cities and towns," accompanied by an "X" in the attainment column. Omission of a designation for "all other cities and towns" in the original notice was an oversight.

Connecticut

Regarding the TSP designation for AQCR 43 in Connecticut, the table is revised to reflect nonattainment for primary standards. The change from secondary standards nonattainment was requested by the State of Connecticut based on he judgment that monitors in the region are not recording short-term primary standard violations that exist. This judgment is supported by the relatively high annual average TSP concentrations recorded in AQCR 43 and by the occurrence of violations at monitoring sites elsewhere which resemble the urban industrialized character of nonmonitored locations in AQCR 43.

REGION IV

Alabama

One commenter said that Fairfield, Ala., in Jefferson County, should be redesignated as attainment for TSP because monitoring data did not show violations. The monitoring data on which the designation was based showed violations of the annual and 24-hour standards during 1976 and 1977, and other monitors in the same area have shown violations. For these reasons, Fairfield must remain designated nonattainment for TSP.

One commenter said that Florence, Ala., in Lauderdale County, within the area adjacent to TVA's Colbert Steam Plant, should be designated attainment for TSP since the site is unduly influenced by reentrained road dust. After careful evaluation, Florence is being redesignated unclassifiable since the monitor was found not to be representative of true ambient air quality levels. Another monitor has been located to obtain more representative air quality data.

Another commenter said the description of the Florence, Ala., nonattainment area should be changed to disassociate the Colbert Steam Plant from it and isolate the nonattainment area to the local area of Florence. Modeling analysis has shown that the nonattainment area is not significantly impacted by the Colbert Steam Plant, and this area description is being generalized to "a portion of Lauderdale County containing Florence."

Florida

One commenter said that Hillsborough County, Fla., should be classified as attainment for SO_2 rather than unclassifiable as previously designated. However, due to special studies ongoing in Hillsborough County, this area will remain unclassifiable for SO_2 until the results of these studies are conclusive.

One commenter said that Pinellas County, Fla., should be designated attainment for SO_2 except for the northwest corner of the county where violations have been recorded. Monitoring data for this county substantiates this position, so the area of nonattainment for SO_2 is not generalized as "the northwest corner of Pinellas County."

Due to the comment submitted on Pinellas County, the Agency decided to designate the southwest corner of

[11] 43 FR 8962, col. 2, Mar. 3, 1978.

Pasco County as unclassifiable for SO_2. This is being done because of the lack of monitoring data in this area where a few major SO_2 sources are located.

Four commenters suggested a reduction in the size of the nonattainment area for TSP in Hillsborough County, Fla. Air monitoring data and computer modeling data in support of such a redesignation show that a delineation of the area in violation of the TSP standard is warranted. Accordingly, the nonattainment area is revised to be "that portion of Hillsborough County which falls within the area of the circle having a centerpoint at the intersection of U.S. 41 and State Road 60 and a radius of 12 kilometers."

Several commenters submitted letters supporting the redesignation of all of Polk County, Fla., as attainment for TSP or as attaining the TSP standards county-wide except for a 1-square-mile area to include the city of Mulberry. EPA has found that the two TSP sampling sites used in designating this area nonattainment are biased and is in the process of reevaluating the entire TSP monitoring network for Polk County. After establishing an approved TSP monitoring network and until data are collected showing representative air quality levels for particulate matter, Polk County is being designated as unclassifiable for TSP.

Based on historical monitoring data, one commenter requested a change in the size of the Duval County, Fla., nonattainment area. With the exception of two TSP monitoring sites in the county, all other approved sites in the county show attainment of the standards. The Agency agrees and this redesignation describes an area which encompasses the violations and the sources believed to be the causes of the violations. The new nonattainment area is "the downtown Jacksonville area located just north and west of the St. Johns River and east of I-95."

One commenter said that Seminole County, Fla., should be designated as attainment for TSP. This opinion was based on that part of the EPA fugitive dust policy which defines rural areas "as those which have: (1) a lack of major industrial development or the absence of significant industrial particulate emission; and (2) low urbanized population densities." For purposes of these designations, any rural area experiencing TSP violations which could be attributed to fugitive dust could claim attainment of the TSP NAAQS. EPA agrees that a low urbanized population density exists in this area, but based on point sources of TSP emissions in the general area of the violations, there is not an absence of significant industrial TSP emissions. For this reason and as supported by recorded violations the secondary TSP standard, Seminole County remains designated nonattainment for TSP.

Georgia

One commenter pointed out that the designation for TSP nonattainment status for Georgia was partially incorrect. The TSP status for Washington County (Sandersville) area was shown as nonattainment for the primary standard. This table should have indicated nonattainment for the secondary standard. The area does meet primary standards for TSP. EPA agrees that this was a typographical error and is changing the designation to reflect nonattainment with respect to the secondary standard only.

For other comments concerning Georgia, see the text on Tennessee interstate areas.

Kentucky

The area of nonattainment presented in the March 3 rulemaking for Henderson County for TSP was inadvertently in error and is revised to reflect the actual area of nonattainment.

A commenter requested that the designation for Muhlenburg County be changed from nonattainment for SO_2 to attainment because no monitors in the area have registered violations, and the SCS used at the TVA Paradise plant has prevented violations. The nonattainment designation is not being changed. EPA modeling indicates that the effect of either the Paradise plant or the Kentucky Utilities Green River plant, at the actual emission rates occurring over the past few years, would cause violations of primary SO_2 standards if a SCS was not being used.

A commenter requested the designation for Greenup County for nonattainment of the SO_2 standards be changed to attainment, because the plant which caused the modeling-based violation had been in violation of the SO_2 emission limit, but was now in compliance. The nonattainment designation is not being changed because the plant had not demonstrated continual compliance before the date of the designation, and still has not been certified as being in compliance.

Mississippi

For comments concerning Mississippi, see the text on Tennessee interstate areas.

North Carolina

One commenter, with respect to the designation of the Spruce Pine area as nonattainment for TSP, noted that recent violations of the primary standard in Spruce Pine were likely due in some measure to construction activity in the vicinity of the monitoring station as well as transport of wind-blown fugitive dust from open mines and unstabilized tailings piles scattered along the mountain valley. This commenter asked that consideration be given to fugitive dust problems in keeping with the Agency's policy on rural fugitive dust. The Agency agrees that the role played by rural fugitive dust in the area's nonattainment problem will limit the type and scope of control strategy revision that can be expected.

Another commenter asked that the portion of Avery County included in the Spruce Pine nonattainment area be removed on the basis of 1977 air quality data gathered by a private firm operating in the county. The Agency deems it inappropriate to do so at this time since the nonattainment designation was made in accordance with the guidelines set forth for that purpose by EPA, i.e., there were violations in calendar year 1976 according to the same firm's data. Consequently, no change in the Spruce Pine designation is being made.

Another commenter asked that the designation of Buncombe County (Asheville) be changed from nonattainment to unclassifiable for oxidants. Again, since the designation was made on the basis of a recorded violation, the Agency feels that it is inappropriate to revise it at this time. The general observations made in the preceding paragraph apply to this area's designation also.

One commenter noted that Durham County was designated nonattainment for carbon monoxide (CO) and oxidants (O_x) on the basis of data gathered by EPA, and that the data in question has not been made available to the State agency. It was requested that Durham County be redesignated as unclassifiable for these two pollutants until such time as the data are reviewed and certified to be valid. The Agency agrees and accordingly is modifying the designation of Durham County to unclassifiable.

South Carolina

One commenter on the South Carolina designation requested a change in the Georgetown status from nonattainment for the primary TSP standards to nonattainment for the secondary TSP standard. The commenter referred to recent air quality data indicating values slightly below the primary standard. The possibility of meterological conditions or other transient factors resulting in the decreased air quality values is sufficient to retain the nonattainment designation for the primary TSP standard. Therefore, no change is being made.

Tennessee

Several industries in the area commented that the nonattainment designation for Maury County should be withdrawn. It was their opinion that

the sampling station recording the violation was influenced by fugitive road dust, automobile exhaust, and residential burning of coal. One commenter stated that the area should be redefined so that industry was not "targeted" as the causative factor. The Tennessee Air Pollution Control Division (TAPCD) commented that the nonattainment area should be redefined to incorporate a smaller area, with the remainder of the original nonattainment area being designated as unclassifiable until additional monitoring can be performed.

EPA concurs in these views of the State agency and the change is being made. The TAPCD is in the process of establishing additional high-volume sampling stations to ascertain the actual air quality situation in the area. The Tennessee agency has also requested the privately-gathered air quality data which several industries assert are adequate to show attainment. TAPCD is conducting a comprehensive emissions inventory for the area and plans to remodel the entire area.

One commenter stated that the nonattainment area for Shelby County should be revised since the CO monitors are biased by heavy traffic flow and industry is being penalized by violations caused by mobile sources. Also, designation of the entire county was felt to be wasteful of manpower and financial resources, as most of the county is rural. TAPCD recommends that the nonattainment area be limited to Metropolitan Memphis and not include all of Shelby County. EPA agrees that the area of nonattainment should be limited to Metropolitan Memphis, and the change is being made.

TAPCD requests that the Knox County nonattainment area for CO be limited to two specific areas within the metropolitan areas of Knox County. EPA agrees that entire county nonattainment designations for CO may be excessive, and is changing the nonattainment designation to conform to the areas identified by the State of Tennessee.

For Davidson County, TAPCD feels that, due to automobile density flow and traffic patterns, CO should not be a major problem at the perimeter of the urban areas. The agency requests that the Davidson County nonattainment designation be limited to the central city area of Nashville. EPA agrees that entire county designation may be excessive and is changing the designation to conform to the nonattainment area suggested by the State of Tennessee.

One industry commenter requested that the Kingsport nonattainment area be reduced to exclude specific industrial sources in the TSP nonattainment area. The commenter felt the designation was based on limited monitoring data, and that the TSP concentrations may have been caused by the fugitive dust rather than industrial emissions. Since the designation was based on valid air quality data, the original designation will stand until additional air quality data are submitted to justify revising the nonattainment status.

TVA recommends that Sumner County be redesignated as attainment for TSP. It is their belief that fugitive road dust was the main contributor to the violations, as the monitor recording violation was located near an unpaved road. The road was recently paved and no violations have occurred since that time. EPA bases its nonattainment designation on the TSP violations recorded during the period January 1, 1976, through June 30, 1977, and retains the original designation until sufficient additional monitoring data are collected which demonstrates attainment.

TVA contends that while excessive particulate concentrations have been measured in Anderson and Knox Counties surrounding TVA's Bull Run plant, they have been lowered since mid-1976 due to the operation of new electrostatic precipitators. They also state that a gravel road, which was influencing one of the sampling stations has been paved and no excessive TSP concentrations have been recorded since that time. Therefore, they request that the area be redesignated attainment. EPA takes the position that until adequate air quality data are submitted to justify revising the nonattainment status, the original designation will stand.

TAPCD commented that the Chattanooga-Hamilton County and Memphis-Shelby County nonattainment areas for photochemical oxidants should be expanded to include contiguous counties on the Georgia and Mississippi sides of the State line since the Bureau of Census apparently included population from these locations in defining urbanized areas. The State of Georgia responded to this comment questioning the need of designating the contiguous counties in Georgia since there were no significant sources of hydrocarbons in those counties and Georgia felt the amount of traffic coming from Georgia into Chattanooga did not produce a significant part of the ozone problem in Chattanooga. EPA is currently evaluating the comments and arguments presented. No changes in the designation of these two interstate areas will be made at this time, but revised designations may be made at a later date.

REGION VI

General Comments

The comments received from the general public, elected officials, and State and local agencies relating to the nonattainment designations, while presenting a broad spectrum of technical and policy issues, were generally motivated by the potentially adverse impact on economic growth through implementation of the emission offset policy as a result of these designations.

The principal issues raised concerning the oxidant designations fell into four categories: (1) Level of the ozone standard; (2) boundaries of the nonattainment areas; (3) impact of transported ozone; and (4) rural oxidant problems.

Many felt that the level of the ozone standard was based on insufficient clinical data and that it was arbitrarily set at too low a level. In the same vein, a desire was expressed for medical evidence that the ozone concentrations observed at specific locations in the region had a demonstrated adverse health effect on the people of that geographic location. Also, evidence was requested that ozone concentrations observed were actually conducive to the photochemical smog problem. The implicit theme within these comments is that the meteorology indigenous to this geographic region perhaps reduces the adverse impact of a given level of ozone.

Many charged that the boundaries of the nonattainment areas (generally the county/parish line) were arbitrary and discriminatory.

Commenters claimed that EPA guidelines on oxidant nonattainment designations were especially troublesome in those areas with low hydrocarbon emissions, thus contributing little to the observed ozone levels, will be penalized for a problem over which they have no control. This is particularly true in some rural areas which lie across the air trajectories of large urban areas.

A similar case involves counties that, because of their negligible hydrocarbon emissions, were monitored to establish an ozone background. The designation of nonattainment based on that kind of data appears inconsistent with the intent of the Clean Air Act because the control of the emissions within such a county will have little or no effect on ambient ozone levels.

The majority of comments relating to the particulate matter designations centered around: (1) The inequities of the rural fugitive dust policy; (2) monitor siting criteria; and (3) the impact of resuspended street dust.

The use of the rural fugitive dust policy to discount the data from those monitors in rural areas that were not being influenced by industrial sources was generally agreeable to all. However, the separate population criteria for the definition of an eastern and western area was challenged as being

completely arbitrary and technically unfounded.

The latter two issues are actually closely related. The argument was made that monitors that were sited inconsistently with EPA guidelines should not be used to support nonattainment designations for the same reason that these data should not be used for implementation plan development, i.e., these data are unduly influenced by the large particulate component of resuspended fugitive dust.

Arkansas

In the March 3, 1978, FEDERAL REGISTER four areas in Arkansas were designated nonattainment by the State for TSP. These were portions of Ashley, Pulaski, and Sebastian Counties for the secondary standard and a portion of Arkansas County for the primary standard. A reevaluation by the State revealed that data from days on which dust storms occurred were not removed. The removal of data taken on days of unusual meteorological phenomena yielding unrepresentative data brought the monitors in Pulaski and Sebastian Counties into attainment. In the case of Ashley County, the State was able to demonstrate that there was no impact of industrial sources at that site. The rural fugitive dust policy (RFDP) would then apply at that site. Also, the high volume filter analysis used to support the designation in Arkansas County, i.e., a demonstration of the impact of industrial emissions, was found to be highly questionable and unreliable due to nonhomogeneous particulate loading on the only filter indicating a significant impact from local industry. The RFDP would then similarly apply to Arkansas County.

Thus the nonattainment designation of the following counties is being changed to attainment for TSP: Ashley, Arkansas, Sebastian, and Pulaski.

Louisiana

Information received by EPA during the public comment period revealed that EPA erred by not including Bossier Parish on the list of those parishes that were designated nonattainment for photochemical oxidants. Two factors became known that necessitate this designation. First, the ozone monitor data that were used to support the designation in Caddo Parish were found to be located in Bossier Parish because of a minor deviation of the parish line from the Red River. Second, Bossier City (Bossier Parish) is considered by the U.S. Department of Commerce (Bureau of the Census), in their publication PC(1)-A20, to be part of the Shreveport (Caddo Parish) urbanized area. Hence, because the population of the Shreveport urbanized area according to the 1970 census is over 200,000 both Caddo and Bossier Parishes are being designated nonattainment for photochemical oxidants based on EPA's guidelines for nonattainment designations.

New Mexico

In the March 3 FEDERAL REGISTER designations, EPA declared Bernalillo County, N. Mex. a nonattainment area for photochemcial oxidants based on measured air quality data showing violations of the standard. During the public comment period the State acknowledged the oxidant nonattainment designation promulgated by EPA for Bernalillo County. However, they suggested and EPA endorses, that the designation of the entirety of Bernalillo County as nonattainment was questionable due to the outstanding terrain features to the east and west of Albuquerque, and due to the prevailing wind directions. These factors also suggest that an area larger than metropolitan Albuquerque should be designated nonattainment. Toward this end the nonattainment designation is being revised to be portions of Bernalillo County.

Also in the March 3 designations, EPA designated all of Grant County nonattainment for TSP. The entire county was chosen because a detailed demonstration of the impact of industrially emitted particulates at the nonattainment monitor sites was not available at that time. The State has submitted the results of a dispersion modeling exercise to demonstrate that the area designation should be a smaller area encircling the major stationary source in the Grant County. Thus, the designation is changed such that only a portion of Grant County is designated nonattainment for the primary TSP standard.

The March 3 EPA TSP designation of nonattainment for the city of Albuquerque is being changed, in accordance with the State recommendation, to reflect the localized nature of the TSP problem. The designation is now changed to apply only to some areas within the city of Albuquerque.

Portions of Eddy and Lea Counties were inadvertently omitted from the March 3, 1978, nonattainment designation for the secondary TSP standard. This designation is added, as the State recommended.

EPA nonattainment designation in Grant County of the secondary SO_2 standard was also revised. The State suggested that it was not correct to designate an area nonattainment for the secondary standard only, if the use of a SCS was the reason for the designation. The original designation was based on monitored violations of the secondary standard only and the fact that the primary source of SO_2 emissions in the county is using a SCS. However, EPA agrees and, based on Agency policy to designate as nonattainment those areas where NAAQS are being met through the use of an unauthorized dispersion technique, i.e., SCS, the designation is being changed to reflect a nonattainment status for the primary SO_2 standard.

Oklahoma

The State of Oklahoma recommends and EPA concurs on a change from the March 3 FEDERAL REGISTER designation of nonattainment for SO_2 in Washington County to attainment based on the following factors:

1. The original designation was based on dispersion modeling of one company's emissions which showed that on 1 day over a 6-month period there was a potential for an excursion above the ambient SO_2 standard. Company production values were used to predict potential emission rates and resulting air quality. On only 1 day did the production numbers exceed values which could result in violations of ambient air quality standards.

2. The air quality surveys conducted by EPA's National Enforcement Investigations Center and a contractor did not indicate violations of ambient air quality standards for SO_2.

3. The in-stack monitor which has been in place at the company since December has not shown SO_2 levels which would cause violations of ambient air quality standards.

Thus Washington County, Oklahoma is being designated attainment for the SO_2 standard.

In order to make EPA's nonattainment designation for TSP in Mayes County more commensurate with the area of probable impact of industrial sources in the vicinity of Pryor Creek, Okla., the area of nonattainment is being changed to be a portion of Mayes County. The portion selected corresponds to an area initially submitted by the State as unclassifiable for TSP.

Texas

In the promulgation of oxidant nonattainment areas, EPA approved the State designation for Neuces County. However, a review of the information used to support the designation indicates that a partial county designation cannot be supported with geographical or emission densities arguments. Hence, for consistency, the designation is being changed such that the status of the entire county is nonattainment.

EPA's unclassifiable designation for SO_2 in El Paso County remains unchanged. Although data show that the SO_2 standards are being attained, one source in the county is using a SCS. Furthermore, the source was using some form of SCS prior to the end of

1970. EPA is considering whether the present SCS is an unauthorized dispersion technique under section 123 of the Act. As soon as the determination is made, the designation for the area will be reconsidered.

EPA also received requests to enlarge the CO nonattainment area in El Paso to include property on which some major industries are located. EPA did not feel that the existing CO data were sufficiently detailed to warrant such a change.

EPA is also reviewing proposals to change several TSP designations for Texas. A final decision on the proposals will be made by EPA shortly.

REGION VIII

This notice revises nine of the attainment status designations published by EPA on March 3, 1978. Six revisions are being made for photochemical oxidant nonattainment designations in Colorado (1), Montana (1), North Dakota (3), and Utah (1). These revisions are based on a detailed review of the ambient air quality data by the States and EPA. Two nonattainment designations in Utah for TSP and one in Colorado are being revised following attainment in accordance with EPA's fugitive dust policy.

Colorado

Ten comments questioned EPA's designation of Rio Blanco County as a nonattainment area for photochemical oxidants, including a detailed analysis by the Colorado Department of Health. EPA has reviewed the ambient air quality on which the designation was based and is revising the nonattainment designation to unclassified. Other comments objected to the designation of the Pueblo area as nonattainment for TSP, the boundaries of the Larimer Weld Designated Area for TSP, and the boundaries of the CO and O_x nonattainment designations in the Denver area. EPA and the State have reviewed the comments and have determined that these designations should not be revised at this time.

Craig is a city with a population of less than 15,000. It is believed the readings above the TSP standard are the results of fugitive dust emissions since there are no known existing point sources. However, since energy development is occurring in this area and point source construction is planned, a thorough understanding of the problem is necessary. Such an analysis is being undertaken and is scheduled for completion by January 1979. Until the completion of this analysis, the area is being designated as unclassifiable.

Montana

The State has reviewed the O_x violations at Colstrip, which were used to designate Rosebud County as nonattainment, and has discovered that the reported ambient concentrations were twice the actual values. The State has concluded that the O_x standard has not been exceeded at Colstrip and has requested that the nonattainment designation for Rosebud County be revised. EPA has verified the State's analysis and is redesignating Rosebud County to attainment.

Two comments objected to the designation of Yellowstone County as nonattainment for O_x on the basis of ambient violations in the city of Billings. However, because of the pervasive nature of O_x, EPA guidelines recommend that county boundaries be used for designating nonattainment areas. Therefore, lacking additional monitoring data in the county, no change is being made for the area boundary.

One comment addressed the validity of the monitoring and modeling data used to designate the Laurel Area as nonattainment for SO_2. EPA has contracted for a study of the emission and modeling data in the area and may revise the current designation on the basis of the study.

The original designation for Butte of nonattainment with respect to the secondary standard for TSP was based upon an apparent reduction in air pollution levels below the national primary standards from 1976 to 1977. However, a re-examination of the measured data in Butte by EPA has revealed that levels in Butte are continuing to exceed the national primary standards for TSP. Therefore, EPA is amending the nonattainment designation to refer to the primary standards as well as the secondary standard.

North Dakota

Two comments, including a detailed analysis performed by the North Dakota State Department of Health, were received which recommended that the three nonattainment areas for O_x (Burleigh, Dunn, and Mercer Counties) be redesignated as unclassifiable. EPA has reviewed the ambient data which resulted in the original designations and has determined that the measured violations cannot be validated. Consequently, EPA is revising the designation of these three areas to unclassifiable.

Utah

Eight comments requested that the State's designation of the southern half of Uintah County as nonattainment for O_x should be revised. EPA and the State have reviewed the ambient O_x data in Uintah County and have determined that no ambient violations occurred in 1976 and 1977. The 1975 data used for the original designation cannot be validated. Therefore, EPA is revising the designation of Uintah County to unclassified. The State originally recommended that the city of Price and Cedar City be designated nonattainment for TSP. Since the designation, however, the State has analyzed the sources of TSP emissions in these cities and has concluded that the ambient violations were caused by fugitive dust. Consequently, the State has requested that both areas be designated attainment in accordance with EPA's fugitive dust policy. EPA is revising these designations as requested by the State.

One comment objected to the designation of Salt Lake and Tooele Counties as nonattainment areas for SO_2. However, in view of continuing violations of the NAAQS for SO_2, no change is approvable for these designations.

REGION X

EPA received comments on 13 of the 39 pollutant-specific nonattainment designations made in the States of Alaska, Idaho, Oregon, and Washington, and is today making several changes. Copies of comments received are on file for public inspection at the EPA Public Information Reference Unit as well as the EPA Regional Office. The changes include redefining boundaries in some cases and changing the attainment or nonattainment status of designated areas in other cases.

CHANGES IN ATTAINMENT/NONATTAINMENT STATUS

Three of the changes relate to revisions from nonattainment to attainment for certain areas in the State of Washington. The three areas—Walla Walla, Tri-Cities, and Yakima, Wash.—have all been designated nonattainment for TSP. The State of Washington Department of Ecology requested that Walla Walla be designated attainment based on EPA's policy of discounting rural fugitive dust. EPA's rural fugitive dust policy is equally applicable to Tri-Cities and Yakima, Wash. Thus EPA is redesignating Walla Walla, Tri-Cities, and Yakima as attainment for TSP.

CHANGES IN BOUNDARIES

For four areas (five pollutant specific designations), the changes relate to the boundaries of the areas rather than the attainment status. These boundary changes are relatively minor in nature and do not affect the basic planning requirements mandated by the initial nonattainment designations made on March 3, 1978.

The areas where EPA is approving changes to boundaries are Boise, Pocatello, and Lewiston, Idaho; and Spokane, Wash.

Idaho

The Idaho Department of Health and Welfare requested changes to the

boundaries of the following areas: (1) Boise for CO, (2) Pocatello for SO_2, and (3) Lewiston for TSP. The change in Boise will make the nonattainment area larger to coincide with the jurisdiction of the agency responsible for State implementation plan-related transportation planning.

The changes in Pocatello and Lewiston involve reducing the size of the designated areas to more accurately reflect the true areas of nonattainment as indicated by available ambient air quality data. In addition, a comment was received from a local industrial source that Pocatello should be designated attainment for SO_2 due to procedural changes made by EPA in the definition of a 24-hour standard violation and limited population exposure. EPA is today approving the boundary changes only. The decision to designate Pocatello as nonattainment for SO_2 was a technical decision based on documented violations of the NAAQS for this pollutant.

Washington

Spokane, Wash., was designated nonattainment for both CO and TSP. The State Department of Ecology recommended changes to the TSP boundary to reflect the true area of nonattainment. This modification results in a small reduction in the size of the area. The recommendation has the support of the Spokane area and Spokane Valley Chambers of Commerce, and the Spokane Area Development Council Authority. EPA is today approving this change.

The Washington Department of Ecology also made a comment in support of their original boundary for the CO nonattainment area in Spokane. The State originally designated a small area encompassing the major traffic corridors and the Central Business District as the nonattainment area. In the March 3, 1978, FEDERAL REGISTER, EPA designated the entire city as a larger "management area." Comments received from the Spokane City Manager support the State-designated boundaries. Comments received from the Washington Environmental Council recommend the designation of an area even larger than the EPA-designated area because of potential violations of the standards as transportation controls, such as traffic rerouting, are implemented. Verbal comments received from the agency primarily responsible for transportation-related planning activities in Spokane support the State-designated boundary.

The State Department of Ecology has clearly stated in its correspondence with the Washington Environmental Council that the designated lead agency is expected to consider the larger urban area for SIP revision purposes. EPA is persuaded by this and by the strong concurrence of the local elected officials in the area. EPA is therefore changing the boundary to that originally designated by the State.

COMMENTS RECEIVED BUT NO CHANGES APPROVED

Comments were also received on six other designations for which EPA is not approving any changes.

Idaho

Comments were received from many residents of the Silver Valley (Kellogg) Idaho area expressing concern over the effect of the TSP and SO_2 nonattainment designations upon local commerce. However, no technical justification was provided in support of an attainment designation. Because the original nonattainment designations made by the State and concurred in by EPA were based on measured levels of air pollution, as required by the Act, EPA is not approving any changes to the designations at this time.

A local industrial source in Pocatello, Idaho, recommended that the area be redesignated attainment for TSP because of placement of TSP monitors in the area and distribution of particle size. EPA has reviewed the nonattainment designation made by the State and has determined that the current nonattainment designation is appropriate.

Washington

The Washington Department of Ecology, the mayor of Clarkston, and the Chamber of Commerce of Clarkston, Wash., recommended that the Clarkston area be redesignated attainment because the TSP problem is caused by rural fugitive dust. EPA is not approving a change because Clarkston is part of an interstate nonattainment area with Lewiston, Idaho, which is influenced by industrial emissions. The State of Idaho is currently studying the impact of the industrial emissions and, if appropriate, the area will be redesignated attainment at a later date.

A local industrial source in Tacoma, Wash., recommended that this area be redesignated attainment for SO_2 because of the SO_2 monitoring method used at the site where ambient standards were recorded. EPA reevaluated the technical analysis and determined that the nonattainment designation is appropriate due to measured violations and the use of a SCS by a major point source in the area. EPA policy requires a nonattainment designation where the NAAQS are being attained through the use of unauthorized dispersion techniques.

The Washington Department of Ecology requested that the O_x nonattainment designation in Vancouver, Wash., be reconsidered due to the influence of emissions from Portland, Ore., and the alleged minor influence of Vancouver sources on the O_x standard violations. However, available air quality data shows violations of the O_x standards in Vancouver and EPA is therefore not approving any changes to the O_x nonattainment designation.

The Washington Department of Ecology requested that the boundary of the CO nonattainment area in Seattle be changed from the EPA-designated larger "management area" to the smaller State-designated nonattainment areas within Seattle and the surrounding area. EPA is not approving any changes to the present designation, however, because of the population distribution and density of the greater Seattle-Tacoma area the desire of the agency responsible for transportation planning activities to deal with a nonattainment area consistent with the "management area."

Finally, it should be noted that appearing in the proposed rulemaking section of this FEDERAL REGISTER is a notice for the State of Alaska proposing a redesignation for the Port of Valdez from attainment to nonattainment for SO_2.

NOTE.—The Environmental Protection Agency has determined that this document is not a significant regulation and does not require preparation of a Regulatory Analysis under Executive Order 12044.

(Sections 107(d), 171(2), 301(a) of the Clean Air Act, as amended (42 U.S.C. 7407(d), 7501(2), 7601(a)).)

Dated: September 1, 1978.

DOUGLAS M. COSTLE,
Administrator.

Part 81 of Chapter I, title 40, of the Code of Federal Regulations is amended as follows:

Subpart C—Section 107 Attainment Status Designations

* * * * *

In § 81.301, the attainment status designation table for TSP is revised to read as follows:

§ 81.301 Alabama.

Alabama - TSP

Designated Area	Does Not Meet Primary Standards	Does Not Meet Secondary Standards	Cannot Be Classified	Better Than National Standards
That portion of Etowah County within the western section of Gadsden	X	X		
That portion of Jackson County surrounding TVA's Widows Creek Plant	X	X		
Those portions of Jefferson County within central Birmingham and the area surrounding the Universal Atlas Cement Plant	X	X		
That portion of Lauderdale County containing Florence			X	
That portion of Mobile County within a section of downtown Mobile	X	X		
A portion of Northern Mobile County		X		

* * * * * *

In § 81.304, the attainment status designation table for TSP is revised to read as follows:

§ 81.304 Arkansas.

Arkansas - TSP

Designated Area	Does Not Meet Primary Standards	Does Not Meet Secondary Standards	Cannot Be Classified	Better Than National Standards
AQCR 016				X
AQCR 017				X
AQCR 018				X
AQCR 019				X
AQCR 020				X
AQCR 021				X
AQCR 022				X

* * * * *

In § 81.306, the attainment status designation tables for TSP and O_x are revised to read as follows:

§ 81.306 Colorado.

Colorado - TSP (continued)

Designated Area	Does Not Meet Primary Standards	Does Not Meet Secondary Standards	Cannot Be Classified	Better Than National Standards
AQCR 11 - Mesa Designated Area	X			
Remainder of AQCR 11 including the City of Craig			X	
AQCR 12 - City limits of Aspen, Eagle, Vail, and Steamboat Springs			X	
Remainder of AQCR 12				X
AQCR 13				X

* * * * *

Colorado - O_x

Designated Area	Does Not Meet Primary Standards	Cannot Be Classified or Better Than National Standards
AQCR 1		X
AQCR 2	X	
AQCR 3 - Counties of Arapahoe, Adams, Boulder, Denver, Jefferson, and Douglas	X	
Remainder of AQCR 3		X
AQCR 4 - El Paso County	X	
Remainder of AQCR 4		X
AQCR's - 5 - 13		X

* * * * *

In § 81.307, the attainment status designation table for TSP is revised to read as follows:

§ 81.307 Connecticut.

Connecticut - TSP

Designated Area	Does Not Meet Primary Standards	Does Not Meet Secondary Standards	Cannot Be Classified	Better Than National Standards
AQCR 41		X		
AQCR 42	X			
AQCR 43	X			
AQCR 44	X			

* * * * *

In § 81.310, the attainment status designation tables for TSP and SO_2 are revised to read as follows:

§ 81.310 Florida.

Florida - TSP

Designated Area	Does Not Meet Primary Standards	Does Not Meet Secondary Standards	Cannot Be Classified	Better Than National Standards
The Downtown Jacksonville Area located just north and west of the St. Johns River & East of I-95		X**		
Seminole County		X**		
Polk County			X**	
That portion of Hillsborough County which falls within the area of the circle having a centerpoint at the intersection of US 41 & State Road 60 and a radius of 12 km		X**		
Rest of State				X**

**EPA designation only

Florida – SO_2

Designated Area	Does Not Meet Primary Standards	Does Not Meet Secondary Standards	Cannot Be Classified	Better Than National Standards
Duval County			X**	
The Northwest Corner of Pinellas County	X**	X**		
The Southwest Corner of Pasco County			X**	
Hillsborough County			X**	
Escambia County			X**	
Rest of State				X**

**EPA designation only

* * * * *

In § 81.311, the attainment status designation table for TSP is revised to read as follows:

§ 81.311 Georgia.

Georgia – TSP

Designated Area	Does Not Meet Primary Standards	Does Not Meet Secondary Standards	Cannot Be Classified	Better Than National Standards
That portion of Fulton County within northwest section of Atlanta	X			
That portion of Chatham County within the north central section of Savannah	X			
That portion of the northern part of Walker County which includes Rossville	X			
That portion of Washington County within the southern section of Sandersville		X		
Rest of State				X

* * * * *

In § 81.318, the attainment status designation table for TSP is revised to read as follows:

§ 81.318 Kentucky.

Kentucky - TSP

Designated Area	Does Not Meet Primary Standards	Does Not Meet Secondary Standards	Cannot Be Classified	Better Than National Standards
Bell County	X			
Boyd County	X			
That portion of Bullitt Co. in Shepherdsville	X			
That portion of Campbell Co. in Newport	X			
That portion of Daviess Co. in Owensboro	X			
That portion of Henderson Co. in Henderson	X			
Jefferson County	X			
That portion of Lawrence Co. in Louisa	X			
McCracken County	X			
Marshall County		X		
That portion of Madison Co. in Richmond	X			
Muhlenberg County	X			
That portion of Perry Co. in Hazard	X			
That portion of Pike Co. in Pikeville	X			
That portion of Whitley Co. in Corbin	X			
Rest of State				X

* * * * *

In § 81.319, the attainment status designation table for oxidant is revised to read as follows:

§ 81.319 Louisiana.

Louisiana - O_x

Designated Area	Does Not Meet Primary Standards	Cannot Be Classified or Better Than National Standards
AQCR 019		X*
AQCR 022		
Caddo Parish	X*	
Bossier Parish	X*	
Remainder of AQCR		X*
AQCR 106		
Ascension Parish	X	
Iberville Parish	X	
St. James Parish	X	
St. John the Baptist Parish	X	
West Baton Rouge Parish	X	
East Baton Rouge Parish	X	
Calcasieu Parish	X	
Orleans Parish	X	
Jefferson Parish	X	
St. Bernard Parish	X	
St. Charles Parish	X	
Grant Parish	X*	
Beauregard Parish	X*	
Lafourche Parish	X*	
Point Coupee Parish	X*	
Lafayette Parish	X*	
St. Mary Parish	X*	
Remainder of AQCR		X*

*EPA designation replaces State designations

* * * * *

In § 81.322, the attainment status designation table for TSP is revised to read as follows:

§ 81.322 Massachusetts.

Massachusetts - TSP

Designated Area	Does Not Meet Primary Standards	Does Not Meet Secondary Standards	Cannot Be Classified	Better Than National Standards
Berkshire AQCR				
Adams		X		
North Adams		X		
Pittsfield		X		
All other cities and towns				X
Central Massachusetts AQCR				
Worcester	X			
Athol		X		
Fitchburg		X		
Gardner			X	
Grafton			X	
Leominster			X	
Millbury			X	
Shrewsbury			X	
All other cities and towns				X
Merrimack Valley AQCR				
Haverhill		X		
Lawrence		X		
All other cities and towns				X
Pioneer Valley AQCR				
Springfield	X			
Chicopee			X	
Holyoke			X	
Northampton			X	
South Hadley			X	
West Springfield			X	
All other cities and towns				X
Southeastern Massachusetts AQCR				
Fall River		X		
Attleboro			X	
New Bedford			X	
Taunton			X	
All other cities and towns				X
Metropolitan Boston AQCR				
Topstield			X	
Wakefield			X	

Massachusetts - TSP (continued)

Designated Area	Does Not Meet Primary Standards	Does Not Meet Secondary Standards	Cannot Be Classified	Better Than National Standards
Walpole			X	
Watertown			X	
Wayland			X	
Wellesley			X	
Wenham			X	
Weston			X	
Westwood			X	
Weymouth			X	
Winchester			X	
Winthrop			X	
Boston	X			
Danvers	X			
Cambridge		X		
Framington		X		
Lynn		X		
Marblehead		X		
Norwood		X		
Medford		X		
Peabody		X		
Quincy		X		
Revere		X		
Swampscott		X		
Waltham		X		
Arlington			X	
Belmont			X	
Beverly			X	
Braintree			X	
Brockton			X	
Brookline			X	
Canton			X	
Chelsea			X	
Dedham			X	
Everett			X	
Malden			X	
Malborough			X	
Melrose			X	
Middleton			X	
Milton			X	
Natick			X	

Massachusetts - TSP (continued)

Designated Area	Does Not Meet Primary Standards	Does Not Meet Secondary Standards	Cannot Be Classified	Better Than National Standards
Needham			X	
Newton			X	
Salem			X	
Saugus			X	
Somerville			X	
Southborough			X	
Stoneham			X	
All other cities and towns				X

* * * * *

In § 81.327, the attainment status designation tables for TSP and O_x are revised to read as follows:

§ 81.327 Montana.

Montana - TSP

Designated Area	Does Not Meet Primary Standards	Does Not Meet Secondary Standards	Cannot Be Classified	Better Than National Standards
City of Missoula	X			
Colstrip Area	X			
City of Columbia Falls	X			
Missoula Area		X		
Butte Area	X*			
Billings Area		X		
Great Falls Area		X		
East Helena Area		X		
Remainder of State				X

*EPA designation replaces State designation

* * * * *

Montana - O_x

Designated Area	Does Not Meet Primary Standards	Cannot Be Classified or Better Than National Standards
Yellowstone County	X*	
Rest of State		X

*EPA designation replaces State designation

* * * * *

In § 81.332, the attainment status designation tables for TSP, SO_2 and O_x are revised to read as follows:

§ 81.332 New Mexico.

New Mexico - TSP

Designated Area	Does Not Meet Primary Standards	Does Not Meet Secondary Standards	Cannot Be Classified	Better Than National Standards
AQCR 012				
Portion of Grant County	X			
Remainder of AQCR				X
AQCR 014				X
AQCR 152				
Portions of City of Albuquerque	X			
Remainder of AQCR				X
AQCR 153				X
AQCR 154				X
AQCR 155				
Portions of Eddy and Lea Counties near industries	X	X		
Remainder of AQCR				X
AQCR 156				X
AQCR 157				X

New Mexico - SO_2

Designated Area	Does Not Meet Primary Standards	Does Not Meet Secondary Standards	Cannot Be Classified	Better Than National Standards
AQCR 012				
Portions of Grant County	X			
Remainder of AQCR				X
AQCR 014				
Portions of San Juan County	X			
Remainder of AQCR				X
AQCR 152				X
AQCR 153				X
AQCR 154				X
AQCR 155				X
AQCR 156				X
AQCR 157				X

New Mexico - O_x

Designated Area	Does Not Meet Primary Standards	Cannot Be Classified or Better Than National Standards
AQCR 012		X*
AQCR 014		X
AQCR 152		
Portion of Bernalillo County	X	
Remainder of AQCR		X*
AQCR 153		X*
AQCR 154		X*
AQCR 155		X*
AQCR 156		X*
AQCR 157		X*

*EPA designation replaces State designation

* * * * *

In § 81.334, the attainment status designation tables for O_x and CO are revised to read as follows:

§ 81.334 North Carolina.

North Carolina – O_x

Designated Area	Does Not Meet Primary Standards	Cannot Be Classified or Better Than National Standards
Mecklenburg County	X	
Buncombe County	X*	
Rest of State		X

*EPA designation replaces State designation

North Carolina – CO

Designated Area	Does Not Meet Primary Standards	Cannot Be Classified or Better Than National Standards
Mecklenburg County	X	
Rest of State		X

* * * * *

In § 81.335, the attainment status designation table for O_x is revised to read as follows:

§ 81.335 North Dakota.

North Dakota - O_x

Designated Area	Does Not Meet Primary Standards	Cannot Be Classified or Better Than National Standards
Entire State		X

* * * * *

In § 81.337, the attainment status designation tables for TSP and SO_2 are revised to read as follows:

§ 81.337 Oklahoma.

Oklahoma - TSP

Designated Area	Does Not Meet Primary Standards	Does Not Meet Secondary Standards	Cannot Be Classified	Better Than National Standards
AQCR 017				X
AQCR 184				
Portions of Oklahoma County	X	X		
Portions of Oklahoma County			X	
Remainder of AQCR				X
AQCR 185				X
AQCR 186				
Portions of Tulsa County	X	X		
Portion of Tulsa County			X	
Portion of Muskogee County			X	
Portion of Mayes County	X*			
Remainder of AQCR				X
AQCR 187				X
AQCR 188				X
AQCR 189				
Portion of Comanche County			X	
Remainder of AQCR				X

*EPA designation replaces State designation

Oklahoma - SO_2

Designated Area	Does Not Meet Primary Standards	Does Not Meet Secondary Standards	Cannot Be Classified	Better Than National Standards
AQCR 017				X
AQCR 184				X
AQCR 185				X
AQCR 186				X
AQCR 187				X
AQCR 188				X
AQCR 189				X

* * * * *

In § 81.343, the attainment status designation tables for TSP and CO are revised to read as follows:

§ 81.343 Tennessee.

Tennessee - TSP

Designated Area	Does Not Meet Primary Standards	Does Not Meet Secondary Standards	Cannot Be Classified	Better Than National Standards
Those portions of Anderson and Knox Counties surrounding TVA's Bull Run plant		X		
Those portions of Campbell County within downtown Lafollette and the area surrounding the Carborundum Company's plant at Jacksboro	X	X		
That portion of Coffee County within a section of Tullahoma			X	
That portion of Davidson County within the 1964 Urban Services Area of Nashville	X	X		
That portion of Hamilton County within, approximately, the city limits of Chattanooga	X	X		
That portion of Maury County within the northern section of downtown Columbia	X	X		
That portion of Maury County within the remainder of the northern section of Columbia			X	
That portion of Obion County within the downtown section of Union City			X	

* * * * *

Tennessee - CO

Designated Area	Does Not Meet Primary Standards	Cannot Be Classified or Better Than National Standards
That portion of Davidson County located in downtown Nashville	X	
That portion of Knox County located in metropolitan Knoxville	X	
That portion of Shelby County located in metropolitan Memphis	X	
Rest of State		X

* * * * *

In § 81.344, the attainment status designation table for O_x is revised to read as follows:

§ 81.344 Texas.

Texas - O_x

Designated Area	Does Not Meet Primary Standards	Cannot Be Classified or Better Than National Standards
AQCR 022		
Gregg County	X*	
Remainder of AQCR		X
AQCR 106		
Jefferson County	X	
Orange County	X	
Remainder of AQCR		X
AQCR 153		
El Paso County	X	
Remainder of AQCR		X
AQCR 210		X
AQCR 211		X
AQCR 212		
Travis County	X	
McLennan County	X*	
Remainder of AQCR		X
AQCR 213		X
AQCR 214		
Nueces County	X*	
Victoria County	X*	
Remainder of AQCR		X
AQCR 215		
Dallas County	X	
Tarrant County	X	
Remainder of AQCR		X
AQCR 216		
Brazoria County	X	
Galveston County	X	
Harris County	X	
Remainder of AQCR		X

*EPA designation replaces State designation

* * * * *

In § 81.345, the attainment status designation tables for TSP and O_x are revised to read as follows:

§ 81.345 Utah.

Utah – TSP

Designated Area	Does Not Meet Primary Standards	Does Not Meet Secondary Standards	Cannot Be Classified	Better Than National Standards
Davis County		X		
Salt Lake County	X			
Utah County	X			
Weber County	X			
Rest of State				X

* * * * *

Utah – O_x

Designated Area	Does Not Meet Primary Standards	Cannot Be Classified or Better Than National Standards
Salt Lake County	X	
Davis County	X	
Utah County	X	
Weber County	X	
Rest of State		X

* * * * *

In § 81.348, the attainment status designation table for TSP is revised to read as follows:

§ 81.348 Washington.

Washington - TSP (continued)

Designated Area	Does Not Meet Primary Standards	Does Not Meet Secondary Standards	Cannot Be Classified	Better Than National Standards
Longview - industrial area		X		
Vancouver - small portion of the industrial port area	X			
Spokane	X			
Clarkston	X*			
Remainder of State				X

*EPA designation replaces State designation.

* * * * *

[FR Doc. 78-25000 Filed 9-8-78; 8:45 am]

[6560-01]

ENVIRONMENTAL PROTECTION AGENCY

[40 CFR Part 81]

[FRL 958-4A]

AIR QUALITY CONTROL REGIONS AND CONTROL TECHNIQUES

Section 107—Attainment Status Designations

AGENCY: Environmental Protection Agency (EPA).

ACTION: Proposed rule.

SUMMARY: EPA was required under the Clean Air Act Amendments of 1977 to publish, on a State-by-State, pollutant-by-pollutant basis, the attainment status of all areas within the States in relation to the national ambient air quality standards (NAAQS) as submitted by the States and approved, or as designated by EPA (43 FR 8962, March 3, 1978). Both the State and EPA can initiate changes to these designations but any State redesignation must by submitted to EPA for concurrence.

This rule proposes a change to the attainment/status designations for the State of Alaska in Region X. The change proposed revises the designation status of Valdez, Alaska from attainment to nonattainment for the primary sulfur dioxide (SO_2) standard. EPA Region X is soliciting comments on this proposal for a period of 60 days and will publish the revised designation as appropriate.

DATES: Comments are due by November 13, 1978.

ADDRESS: Environmental Protection Agency, Region X (M/S 629), 1200 Sixth Avenue, Seattle, Wash. 98101. Environmental Protection Agency, Public Information Reference Unit, Room 2922, 401 M Street SW., Washington, D.C. 20460.

FOR FURTHER INFORMATION CONTACT:

Clark L. Gaulding, Chief, Air Program Branch (M/S 629), Environmental Protection Agency, 1200 Sixth Avenue, Seattle, Wash. 98101, telephone 206-442-1230 (FRS: 399-1230).

SUPPLEMENTARY INFORMATION: On March 3, 1978, as required by section 107 of the Clean Air Act Amendments of 1977, EPA promulgated the attainment status of all States in relation to the national ambient air quality standards (43 FR 8962). Even though this was a final rulemaking action, comments were invited for a period of 60 days. A summary of all Region X's modifications to the March 3, 1978, nonattainment designations appears in the final rulemaking section of this FEDERAL REGISTER.

During the Above comment period, the Alaska Department of Environmental Conservation (ADEC) requested that the Valdez, Alaska, area be redesignated from attainment to nonattainment States for SO_2 based upon future projections of SO_2 emissions from oil tankers associated with activities at the Valdez pipeline terminal. EPA proposes to approve the request by the State of Alaska, by designating Valdez as nonattainment for the primary SO_2 standard.

This action is being published as a proposal, rather than as a final rulemaking due to its potential major impact upon the Valdez area and the Agency's desire to provide the public with an opportunity to comment on such action.

Comments on the proposed change are invited for a period of 60 days (Nov. 13, 1978). Comments received will be evaluated and a final designation published in the FEDERAL REGISTER.

Sections 107(d), 171(2), 301(a), of the Clean Air Act, as amended (42 U.S.C. 7407(d), 7501(2), 7601(a)).

Dated: September 1, 1978.

DOUGLAS M. COSTLE,
Administrator.

[FR Doc. 78-25601 Filed 9-8-78; 8:45 am]

Federal Register

MONDAY, SEPTEMBER 11, 1978
PART VI

DEPARTMENT OF COMMERCE

Office of the Secretary

OPTIONS PAPER ON PRODUCT LIABILITY AND ACCIDENT COMPENSATION ISSUES

Synthesis of Public Comment

[3510-17]

DEPARTMENT OF COMMERCE

Office of the Secretary

OPTIONS PAPER ON PRODUCT LIABILITY AND ACCIDENT COMPENSATION ISSUES

Synthesis of Public Comment

Synthesized below is the public commentary solicited by the Department of Commerce in response to the publication of its Options Paper on Product Liability and Accident Compensation Issues ("Options Paper") in the FEDERAL REGISTER on April 6, 1978 (43 FR 14612 (1978)). The Options Paper was prepared by Commerce at the request of the Office of Management and Budget and of the White House Domestic Policy Staff. It presented a range of options available to address the product liability problem and set forth this Department's recommendations to the Administration.

The public commentary regarding the Options Paper has been available for public inspection at the Department of Commerce since May 1978. Numerous trade associations, trade publications, and others have availed themselves of the opportunity to review them. However, in the interest of disseminating that commentary more broadly, the Department of Commerce has concluded that it would be in the public interest to prepare and publish this synthesis in the FEDERAL REGISTER. In light of the number of comments received, it was not possible to reproduce quotes from all letters or even groups that responded. We have tried, however, to reflect the major viewpoints received with regard to each recommendation.

Since the publication of the Options Paper on April 6, the Administration has adopted a program to address the product liability problem. That program is described in a Department of Commerce Background Paper dated July 20, 1978, which has been reproduced at the end of this synthesis.

The Administration, this Department and its Task Force on Product Liability and Accident Compensation were most appreciative of the extensive time and thought that respondents invested in their commentary. The comments were useful in helping us make decisions on these complex matters and will continue to be of benefit as we implement the Administration's decisions.

HOMER E. MOYER,
Deputy General Counsel.

VICTOR E. SCHWARTZ,
Chairman, Task Force on Product Liability and Accident Compensation.

SUMMARY OF PUBLIC COMMENT

The Options Paper was based in principal part on the Final Report of the Federal Interagency Task Force on Product Liability as well as public response to that document. It set forth a series of alternatives regarding what action, if any, the Federal Government should take to address the product liability problem. It also contained the Department's recommendations to the Administration.

A substantial amount of public comment on the Options Paper has been received during and subsequent to the 30-day comment period following its publication. More than 325 responses were received from product manufacturers, distributors, and retailers located in 34 States. A large number of the respondents who expressed concern about rising product liability premiums are sellers of capital goods. The Interagency Task Force's Final Report disclosed that capital goods manufacturers were subject to very substantial increases in product liability insurance premiums. In addition to capital goods sellers, responses were received from manufacturers of pharmaceuticals, outdoor power equipment, chemicals, sporting goods, and a variety of other products.

Twenty-one industry trade associations, representing several thousand companies, commented, as did a total of ten insurance companies, trade associations, and regulators. Three consumer groups and seven members of the Under Secretary of Commerce's Advisory Committee on Product Liability also responded.

Since the publication of the Options Paper on April 6, the Administration has adopted a program to address the product liability problem. That program is described in a Department of Commerce background paper dated July 20, 1978, which has been reproduced at the end of this synthesis (appendix A). The major change in the Administration's program from the Options Paper recommendations was in regard to a short-term relief measure. A proposal to revise the Internal Revenue Code to provide a limited deduction for contributions to product liability self-insurance trusts [1] was replaced by a proposal to extend the loss carryback period for net operating losses attributable to product liability to 10 years. Section 172 of the Internal Revenue Code presently provides for a general loss carryback period of 3 years. The recommended alternative has the same benefit, other than deferral, and a lesser revenue impact than the self-insurance trust approach. Also, it is easier to administer and allows for a more efficient use of business capital.

The Department of Commerce made 11 recommendations to the Administration regarding the product liability problem, two short-term and nine long-term proposals. Summarized below are some representative comments on the Options Paper generally and on each of those Commerce recommendations.

I. GENERAL PUBLIC RESPONSE TO THE OPTIONS PAPER

The general public response to the Options Paper included: (1) Product sellers and their representatives who, as a group, voiced their concern about the severity of the product liability problem and generally supported the proposals in the Options Paper; (2) insurance companies, trade associations, and regulators who disputed the need for any Federal action regarding product liability and who, with a few exceptions, opposed the Commerce proposals; and (3) several consumer groups that approved of most of the proposals and appreciated the fact that they did not focus on restricting the rights of product users but addressed the causes of the problem.

The comments received from product sellers and their trade associations emphasized their view that the product liability problem is an extremely serious problem. In support of that view, they cited statistics relating to the sharp increases in their product liability premiums, together with statements that, in many instances, they have had few product liability claims successfully asserted against them. They urged immediate action to deal with the product liability problem and expressed strong support for many of the commerce recommendations, both generally and specifically, as indicated by the following comments:

> Our product liability insurance used to run $400.00 per year for $1,000,000 worth of coverage. Our most recent quote came to $75,000 per year for the same coverage. We carried this type of insurance for over 20 years and no claims were paid on our behalf. Nonetheless, we were cancelled in 1976 and have elected to do without or "run bare" since then. We simply cannot afford $75,000 per year.

> When we were notified of these astronomical premium increases, we began to shop around for more competitive coverage for product liability insurance. We found virtually no one interested and were informed by other insurance carriers that we were lucky to have coverage at all at the

[1] See 43 FR 14612, 14622-23, 14627-32.

price we were paying. This attitude toward us by the insurance industry certainly seems at variance with their attitude to the Administration.

We recently completed a survey of forty used machinery companies in Michigan and found to our surprise that only 18 claims had been made against these 40 companies in the last 10 years! Furthermore, only 2 cases resulted in any payments; one for $28,000 and one for $2,800. Both of the cases involved were settled out of court. It appears to us that the insurance industry is taking advantage of a kind of hysteria that seems to have come over us as a people and we feel it is time someone challenges them to prove that their ridiculously high rates were justified and not the 'rip-off' that most of us suspect.

Our company has only had one product liability claim in its entire history, and that one was relatively minor ($3,000 total settlement). In spite of this, our product liability insurance premiums are escalating at an astronomical rate. Two years ago, our premiums increased by 500 percent in one year (from approximately $10,000 to approximately $60,000) before we had ever experienced our first claim. Last year they increased by another 100 percent, so that we have experienced a two-year increase on the order of 1,000 percent. This may not be a problem to the insurance industry, but it is certainly a problem to our company.

We have reviewed this options paper and are in full and complete agreement that the enactment of legislation along this line is absolutely necessary to correct the present impossible product liability situation as it affects manufacturers.

We are a business of less than twelve (12) employees and make special Packaging Machinery. Started business in 1943, and in thirty-five (35) years have never had a claim filed against us. One insurance underwriter took our premiums, including those for product liability, all these years, and early this year told us they are dropping it. My letter to their President caused them to take another look, but the premium quoted was probably pulled out of a hat, and I considered it arrogant. There are no rewards given for our prudent and safe operation, and at the moment we are operating without Product Liability coverage. A small business such as ours could be completely wiped out with one unfair or capricious claim against us. We support the recommendations of the U.S. Dept. of Commerce, or something similar, as we cannot raise our prices to take care of excessive premiums.

Despite what you may have been told by the insurance industry, Product Liability is still a mighty sore spot in our craw. Reason: this year's bills will be over three times last year's bite. We're going from $35,000 to almost $109,000 and we can't afford it, and last year's bite was greater than the year before. Further, you have to search and search before you can find a company willing to cover you, even at the greatly increased rates. . . . We do need something and we need it soon—don't you believe anyone who tells you otherwise.

We have been advised that the insurance industry has informed the White House and leading administration and legislative personnel that problems with product liability insurance do not exist. Perhaps that is true from the standpoint of the insurance industry, but it is certainly not true from the standpoint of the insured. Problems most certainly exist, and they are already of crisis proportions.

We wish to affirm the importance of this issue to our company and this industry (container machinery) and to advise you of our agreement with the goals stated in your options paper.

Your Product Liability Task Force proposals are of great importance and interest, especially to small manufacturers.

Whatever urgency you can give this matter will be appreciated.

It is encouraging to learn that the Carter Administration has created an office to study the unjust product liability situation.

You have done an admirable job in condensing the vast amount of information in the interagency study and in showing the need to relate the tort system, insurance and manufacturing practices.

We agree that a change in one area will not be effective without consideration of the other areas. We also applaud your short, medium and long term solutions. On the other hand, it will cause an eventual catastrophe to use a short term band-aid and ignore the longer term aspects of the problem.

On the other hand, insurance industry trade associations, in their comments, disputed the need for most of the Commerce proposals. The American Insurance Association ("AIA"), the National Association of Independent Insurers ("NAII"), and the Independent Insurance Agents of America ("IIAA"), for example, commented on the current status of the problem:

AIA

The Department of Commerce's Options Paper, which calls for increased federal presence in product liability and insurance, makes recommendations that are largely unsupported by fact and are contrary to the weight of evidence.

A close study of the Options Paper quickly reveals that its authors have ignored factors which clearly indicate that this proposed new federal activity is unwarranted and unnecessary.

Foremost among these factors is the conclusion reached more than a year ago by underlying government reports that there is *no crisis* in product liability, despite some acknowledged difficulties in insurance rating, product manufacture and in the tort law system.

By overlooking this fundamental conclusion, the authors of the Options Paper have steered a course for federal intervention that is completely unwarranted.

Additionally, the Options Paper ignores the time that has elapsed since 1976 during which impressive remedial actions were undertaken by manufacturers, insurers and state legislators in response to those product liability problems that do exist.

NAII

The Final Report of the Interagency Task Force did lay to rest many myths arising about the apparent crisis in products liability. However, since the original study by the Task Force began in 1976 there has been a rapid abatement of the alleged crisis.

IIAA

[T]he real solutions lie in product safety, enlightened insurance industry treatment of products liability and tort reforms. Interim insurance marketing solutions must be the responsibility of insureds, agents and companies working together to find markets while the real solutions take shape.

One insurance company summarized the position of the insurance industry in its statement that:

At the present time there is no widespread crisis in products liability insurance. Those who have opted for federal intervention have totally ignored the actions taken by the insurance industry and the state regulators to solve any products liability problems, such as the voluntary Market Assistance Programs, the Products Liability Tort Reform package, and the development of more comprehensive data-gathering reports.[2]

On the other hand, consumer groups, such as the Consumers Union, observed:

We . . . commend the task force for the even-handed comprehensive Final Report which it prepared on the product liability issue. This report should provide a sound basis for decisionmaking on both the federal and state levels . . .

The Office of the Consumer Advocate, Metropolitan Dade County, Fla., commented:

The overall substance of the paper is commendable and timely. In virtually every consumer, trade and professional magazine one may pick up advertisements and stories detailing the explosive crisis in the product liability field. The federal government's willingness to research the area and enumerate the relative advantages and possibilities available receives my wholehearted praise.

As a consumer advocate, my cardinal concern in this regard is three-fold: first, that consumers receive products whose manufacture reflects a devotion to safety, both for the consumer and the worker; second, recognizing that no one can ensure one-hundred percent safety, that workers and consumers incurring personal and property injuries are compensated to the justifiable extent of such injuries through the responsive oper-

[2] See description of Market Assistance programs, and data-gathering reports in Section II. B. 1.; *infra*.

ation of a workable legal system; and, finally, that the data and methods used to determine premiums for product liability insurance—premiums which significantly affect consumer prices—are not inadequate, inaccurate or otherwise deficient, since such shortcomings nearly always result in unfairly high prices, both for the premium and for the product against whose defects those premiums insure.

A representative from the Environmental Defense Fund stated:

The Environmental Defense Fund is pleased to see that the Administration is taking steps to solve the problem of product liability premium prices in a way that does not destroy the rights of injured consumers in lawsuits or impinge on manufacturers' incentives to produce safe products.

II. PUBLIC COMMENTS ON SPECIFIC COMMERCE PROPOSALS

A. Short-Term Recommendations

The Department of Commerce made two recommendations regarding measures designed to provide short-term relief from the product liability problem while longer-term measures are implemented. Those two recommendations and the public reaction to them are described below.

1. *The Options Paper recommended that the Internal Revenue Code should be amended to permit qualified businesses to set aside a portion of their pre-tax income to fund a specific reserve for self-insurance against product liability claims and related costs.*[3]

Approximately 168 product sellers and 14 industry trade associations endorsed the Commerce tax proposal. Among those comments were the following:

Addressing ourselves to the more immediate relief that the Administration could spearheard, we would encourage maximum effort for the Administration's plan on tax deductibility for product liability self-insurance reserves.

I think the proposal by the Department of Commerce that companies can get tax deductibility on a self-insurance reserve is excellent.

We strongly believe support Federal legislation which would provide tax deductibility for reserves set aside to be used for covering liability exposure as well as tax deductibility of premiums paid to captive insurance companies.

The primary criticism of product sellers regarding the Commerce tax proposal was that the limitations on annual deductions set forth in the Commerce model tax bill were "unrealistic" and "too minimal to be effective."

The British Government, through the Commercial Department of its Washington Embassy, voiced its concern about the potentially discriminatory effect that the tax proposal could have on foreign manufacturers and exporters. It did not believe that the Commerce tax proposal with its set-aside, would provide "an adequate alternative to conventional insurance protection," but urged that, if the proposal were implemented, it should apply to British subsidiaries that are subject to U.S. taxation.

The British Embassy also observed that:

Apart from this, a setting aside system may not be particularly advantageous and we would not want to encourage similar arrangements here.

Inland Revenue also see major difficulties in such a scheme on tax grounds.

It would not provide an adequate alternative to conventional insurance protection. A company using such a scheme would (at least in the early years) have very limited reserves, and it seems likely that companies who do not carry adequate insurance now will continue with their present policy but at the same time build up some tax free reserves in the hope that they will not need to meet any claims. The treatment of reserves when a company went into liquidation would also pose problems since its insurers might well argue that such a system set a precedent for favourable treatment of claims equalisations reserves which we understand the Revenue reject.

Of the consumer groups commenting on the tax proposal, one organization indicated its general support, stating that:

This solution should provide an alternative for companies which have been faced with spiraling product liability premiums. Moreover, by creating additional competition for the insurance dollar, this solution should indirectly put pressure on insurance companies to hold down insurance premiums and to calculate insurance rates on statistically sound bases. Of course, and amendment of this type must be narrowly drawn to avoid creating an unwarranted loophole in the tax laws.

Another consumer group cautioned that:

Any proposals for a tax deduction or credit for product liability premiums paid would have to contain some mechanism for requiring that the manufacturers' savings be passed on, at least in part, to the consumer to be acceptable. Otherwise, the insurer would receive for a premium what he demanded, the manufacturer would pay it but benefit by a deduction, yet the consumer would be charged an unrealistic and unfair price.

A consumer spokesperson from the Environmental Defense Fund observed:

The Commerce proposal is a way to defuse 'tort reform' legislation by providing manufacturers with a way out of the totally unjustified rates being charged them by insurance companies. Small businessmen can bypass insurors altogether and yet have money to pay judgments when they occur. Moreover, this mechanism will drive commercial insurors to fairer and more rational price-setting. The treasury will not lose a significant amount of money, since the money that would go into self-insurance reserves is *already deducted* as a business expense by: (a) manufacturers who pay insurance premiums; (b) manufacturers who pay product liability judgments; and (c) insurance companies who put the money from insurance premiums in their reserves. Self-insurance will also *increase* injury prevention by manufacturers because their own funds are at risk.

Finally, the Mid-Atlantic Legal Foundation, a nonprofit foundation representing the general public, saw the tax proposal as a "partial remedy" that is better than no remedy. In light of the Options Paper's long-term solutions, which it characterized as being "seriously deficient" because of the "minimum of an additional 3 years for completion, publication and enactment," it believed that the proposal's limits on annual deductions were unrealistic (*i.e.*, $100,000 for firms with a severe product liability problem).

The major insurance trade associations expressed opposition to the proposal. Their concerns centered on the belief that the deduction would lead to unsound self-insurance practices, on the high cost of self-insurance programs for small businesses. They also maintained that self-insurance would be an inappropriate and inefficient means of providing product liability coverage.

On the other hand, the IIAA suggested that such legislation not be hastily enacted this year. It agreed that the device would allow businesses to utilize higher deductibles, and thereby lower the cost of their product liability insurance. The IIAA was concerned, however, that, if the proposed product liability self-insurance trust was the only form of insurance for a company, the insured and possibly the injured party would go uncompensated. It noted that many small firms did not have the capability of reserving sufficiently large sums of money and expressed concern that the legislation does not assure that proper insurance practices will be followed. It suggests that the trusts would be subject to regulation by the State insurance departments.

The AIA and NAII also commented extensively on the tax proposal. The AIA noted that if small businesses relied upon the proposed product liability trusts, they would not have effective insurance protection. It stated that:

If a firm cannot afford to pay increasing products liability premiums, it cannot afford to properly fund its self-insurance fund . . . The concept tends to create the illusion rather than the substance of insurance. In essence, these small businesses will not be pursuing a course of insurance protection. They will be uninsured. Tax deductions will tend to encourage firms to pursue actuarially unsound self-insurance programs merely to gain apparent tax advantages.

[3] See 43 FR 14612, 14620-23 (1978). The Commerce model bill was published in the FEDERAL REGISTER, along with a section-by-section analysis; see *id.* at 14627-32.

The proposal would place firms with no insurance expertise, skills, or disciplines in the business of insurance.

Similarly, the NAII commented:

It would tend to encourage firms to pursue actuarially unsound self-insurance programs merely to gain apparent tax advantages, and would place firms with no insurance expertise, skills, or disciplines in the business of insurance.

Both the AIA and NAII believed that the administrative expenses of a self-insurance program would be unaffordable for small businesses. The AIA noted that:

Costs will include the hiring of insurance skills since it is rare that a small firm will possess enough insurance expertise to set up a self-insurance program. Other costs which would make self-insurance impractical for small business are the defense and claims handling costs associated with defending claims.

The NAII concurred.

Both organizations equated the high cost of insurance for small businesses with the high cost of claims. For example, the AIA noted that:

Those small firms which have difficulty affording insurance tend to engage in high hazard businesses—businesses where insurance-related expenses will be higher than average.

Similarly, the NAII said:

It is probable that the small firms which are presently experiencing premium increases are the same firms where claims are most severe, and, consequently, legal expenses will be higher.[4] Those small firms which have difficulty affording insurance tend to engage in higher hazard businesses—businesses where insurance-related expenses will be higher than average.

Finally, three insurance trade associations indicated that self-insurance should not be used to fund larger deductibles for product liability. Thus, the Alliance of American Insurers ("AAI") stated that:

Self-insurance, when it is used by small companies, is invariably adopted to fund losses where *claim frequency* is the principal problem, where losses are somewhat predictable. Just the opposite problem prevails in product liability, where claim severity is the major problem, and where liabilities and claim filings are quite unpredictable in their occurrence.

The NAII commented that:

It must be remembered that deductibles tend to lower costs only for those industries which experience many claims (frequency) as opposed to expensive (severity) claims. In product liability, it appears that it is the latter type of claim that has come to be predominant.

The AIA concurred:

Deductibles tend to lower costs only for those industries which experience many claims (frequency) as opposed to expensive (severity) claims. In product liability, severity, not frequency, is the problem.

On the other hand, a leading insurance brokerage firm commented:

[T]he real objective of the proposal is to make insurance available at reasonable cost to small business. The shortage has been largely attributable to lack of underwriting capacity in the insurance industry and tax equity is a device designed to restore the balance between the supply of coverage and the demand for it by reducing demand.

As was noted above, the Administration proposed an alternative tax relief measure which would extend the loss carryback provision of the Internal Revenue Code for net operating losses attributable to product liability from three to ten years.[5] This alternative has the same benefit, other than deferral, and a lesser revenue impact than the self-insurance trust approach. Also, it is easier to administer and allows for a more efficient use of business capital.

2. *The Department recommends that the Administration not pursue either a federal insurance or reinsurance program relating to product liability at this time.*[6]

Only one respondent was against this proposal; he felt that a federal program was needed to meet the immediate product liability problem. The Administration concurred in the Commerce recommendation.

B. Long-Term Recommendations

The Department of Commerce made eight recommendations regarding long-term measures to deal with the product liability problem. Six of those measures address the principal causes of the problem which were identified by the Interagency Task Force on Product Liability in its Final Report[7]: inadequate insurance ratemaking procedures (recommendation 1), uncertainties in the tort system (Recommendation 2-4), and unsafe manufacturing practices (Recommendations 5-6). Two other long-term measures were recommended because they would add stability to the product liability system although they do not address the root causes of the problem (Recommendations 7 and 8). Finally, the Department of Commerce recommended a means for coordinating federal initiatives in the area of accident compensation (Recommendation 9). The Commerce recommedations and the public response to them are described below.

1. *Prepare a report that would include draft product liability insurance regulation standards. The report should indicate whether and to what extent direct Federal regulation of product liability insurance is warranted.*[8]

The proposed report would:

Indicate what data should be supplied by insurers.

Indicate whether premiums should be based in part on an insured's past loss experience and/or its implementation of loss prevention techniques.

Establish a mechanism that would assure that product liability rates and premiums are fair, non-discriminatory and reasonably related to product risk.

Indicate how insurers should report profit and loss for product liability.

Indicate whether it is necessary to regulate insurers in regard to providing loss prevention assistance to their insureds.

Most representatives of the insurance industry opposed this recommendation on the grounds that such action was not needed. Their opposition is based on several factors. First, they contest the allegation that insurer ratemaking practices are a principal cause of the product liability problem. Product liability rates, they argue, simply mirror the underlying causes of the problem. Thus, the AIA stated that:

Federal study of product liability insurance regulation standards is not needed. The so-called 'affordability problem' so frequently mentioned is a direct result of the tort liability system and not a lack of data on the part of underwriters.

Second, as has been discussed above many commentators have indicated that the product liability problem is not severe enough to warrant adoption of this recommendation.[9] For example, the AAI objected to the proposed report stating that:

We take particular exception to the Department's recommendation that federal regulation of product liability insurance ratemaking may be warranted. In particular, the Department at Commerce's position on this potential recommendation does not square with its prior position on federal insurance or reinsurance. Certainly, if the problem of insurance affordability is not severe enough to recommed federal involvement in providing federal insurance in competition with the private sector, then it seems to us that the problem is certainly not severe enough to warrant federal intrusion into the underwriting and ratemaking practices of insurers and their regulation by the states. What such intrusion does, in effect, is to undermine and attempt to duplicate the role of the state in the regulation of insurance and we are convinced that would be counter-productive.

Third, some insurance groups pointed to the steps already taken by the

[4] The AIA also concluded that such small firms would have higher legal costs than most firms due to the complexity and severity of the claims experienced by these firms.

[5] See Department of Commerce background paper of July 20, 1978, at the end of this synthesis.

[6] See 43 FR 14612, 14618-19, 14623 (1978).

[7] Task Force on Product Liability, Final Report, I-20—I-30 (1977).

[8] See 43 FR 14612, 14612-15, 14623-24 (1977).

[9] See insurer public commentary regarding the Commerce tax proposal, supra.

states, the National Association of Insurance Commissioners ("NAIC"), and the Insurance Services Office ("ISO") to support their argument that the product liability problem is being dealt with effectively at the state and industry level. These steps include the following:

(1) Several states, *e.g.*, Georgia, Kansas, Illinois, and Minnesota, have enacted statutes requiring insurers to file detailed reports on their product liability experience.

(2) The NAIC developed and adopted at its June 1978 meeting a model product liability questionnaire for use by the states. This questionnaire will seek information about both insurance company practices and statistical data on product liability that has not been available.

(3) Market Assistance Programs ("MAPs") have been organized in 26 states.[10] The MAPs are committees formed under the auspices of the insurance commissioner when an availability problem in a state is perceived. The NAIC recently released a report of MAP activity with 8 of the 26 states reporting data. It showed that of 245 applicants, 106 were placed through MAPs, 111 were "non placements", and 28 were "unknown." The AIA's data showed that 800 companies had applied for assistance, a number which they believed confirmed the conclusion that there is "no significant product liability insurance availability crisis."

(4) The NAIC has tentatively decided to order a separate line for product liability in the annual statement to insurance commissioners, which details premiums, loss reserves, claims, and expenses by line of insurance. That change would be effective in 1981. Presently, product liability is included in a category denominated "Other Liability," and no separate statistics are available from the annual statement.

(5) The Insurance Services Office has developed a new Comprehensive Statistical Plan ("CSP") which will generate a large amount of data on product liability claims and premiums that has not been available in the past. For example, monoline and package policy data will be available by product classification and with exposure information needed for ratemaking purposes.[11]

Finally, some insurance trade association commentary was critical of the Department of Commerce's understanding of the mechanics and the limitations of the insurance ratemaking system. The AAI objected to the proposed report, stating that:

> The Commerce Department appears to still be laboriang under a number of major mis-conceptions about the insurance rating and underwriting process with respect to product liability insurance. These mis-conceptions and misunderstandings, we believe, have been fundamental in the development of the Department's position in singling out the rating process as one of the chief causes of the product liability problem. Further, we believe that if the Department truly understood the objectives of the rate making function, and further, if it understood what is and is not feasible in the development of rates, it would never have proposed a recommendation for Federal study/regulation of the rating process in the first place.

As to specific items to be included in the report, the IIAA commented on the implication that premiums should be related to an insured's loss experience or its implementation of loss prevention techniques as follows:

> There are indeed, serious complications in mandating discounts based on an insured's loss experience and his implementation of a loss prevention program. Insurance is not, and never was, based on the experience of an individual risk. Insurance is based on averaging and the group, not the individual. The experience of an individual risk simply is not credible. By mandating such discounts, the Federal Government is, in essence, rewriting the prinicples of insurance.

On the matter of relating premium to the risk, the IIAA said:

> State laws already require that rates be adequate, not excessive and not unfairly discriminatory. It is simply untrue, as the Department charges, that insurance commissioners are more concerned that rates are at a level to prevent insolvency than they are with the fairness of such rates to the unsured. Insurance commissioners do not rubber-stamp rate increases. They are vigilant in protecting the consumer against what they feel are excessive rates.
>
> State insurance commissioners are also keenly aware of the factors in their states which influence rates. A blanket rate for the entire country would ignore unique local conditions and problems. Fair, non-discriminatory rates are a goal to which all commissioners strive, and with improved reporting requirements, and the play of competitive market-forces, overreaction in pricing will cease to be a problem.

Product sellers also commented on the Commerce recommendation that a report on insurer ratemaking practices be prepared. A number of companies indicated that their product liability insurance premiums had increased significantly or that such coverage was no longer available to them, despite their statements that they had not incurred any product liability claims.

Several producers and sellers who did comment expressed reservations about possible Federal intervention into the regulation of insurance, a traditional province of the states. A major chemical producer said:

> Regarding the draft product liability insurance regulation standards, we would discourage direct Federal regulation of product liability insurance on the grounds that insurance matters are more appropriately handled at the State level.

A trade association representing a capital goods manufacturer said:

> Although we are not experts in the insurance field, we do have questions about this recommendation particularly insofar as it may lead to Federal regulation of product liability insurance. Other moves in Congress both related and unrelated to the matter now before us, suggest the development of a body of opinion within Congress favoring Federal regulation of *all* insurance. No doubt State regulation of insurance is less than perfect, but we are not reassured by much of the Federal regulation of business and hence, would be inclined to view such a move with disfavor.

But several firms were prepared for the possibility of Federal regulation if it would reduce costs:

> Ordinarily we would be amongst the last to recommend any kind of Government regulation . . . In view of the irresponsible and unconscionable action on the part of the insurance industry to thus take advantage of our small industrials, and in view of the overt action of our fifty State Insurance Commissioners to aid and abet their raids [sic] instead of even trying to protect the public interest, the Federal Government apparently has no alternative to now bringing the insurance industry under regulation, as well as withdrawing their exemption from Antitrust Laws.

> Preparation of draft product liability insurance regulation standards. This we favor as we have felt all along that the high cost of providing insurance to machinery dealers is overstated and unsubstantiated. We have been in this business for over 35 years and never had a claim, yet we must carry this high-cost insurance and continue to worry as we are not protected by law properly.
>
> We support product liability insurance regulation standards. We feel that it is essential for government to act upon the issuance of standards as guidelines to the industry to eliminate the gross unfairness under our present system.
>
> We agree that this is vitally important if we are to assemble the necessary data to get at the root of and resolution to the problem. The insurance companies will oppose this rather vehemently, but it is needed.

In most instances product sellers did not comment on the steps taken by the states and the industry to alleviate the product liability problem. Two groups, however, had the following comments on the effectiveness of MAPs. The first, a trade association, stated that:

> The market assistance plans developed by the insurance industry are ineffective. When announced last fall, we advised our 500 member companies of these plans operating in their respective states. Not one company has been able to secure insurance

---

[10] The NAII's comment on the MAP's is representative: We would not deny that there has been a dramatic increase in premiums but would offer the experience of the state Market Assistance Programs (MAPs) as strong evidence that the unavailability (and perhaps unaffordability) issue has been over-emphasized.

[11] Exposure information has been available on only about 10 percent of the coverage in the past.

via MAP, and many reported they found the MAP to be only an insurance broker with no idea of where insurance could be obtained.

The second, an organization named RETORT, was more forceful in its comments:

Does MAP work? Does the voluntary market work? Like the Red Queen in *Alice Through the Looking Glass* who declared, "When I say a thing and stamp my foot thrice, that thing is true," the PLII[12] has stamped its foot thrice and said it works. And it does, just as it did prior to MAP.

And why not? It is implemented by the same insurance company executives and NAIC regulators who could not perceive either an availability or an affordability problem in the first place.

If a risk gets to Massachusetts MAP despite (1) the lack of enthusiasm among brokers, (2) the observer attitude of the Insurance Commissioner, (3) the total absence of coverage by the commercial or educational media, MAP will see to it that the risk receives detailed questionnaires to complete and eventually a quote.

The risk may not be able to afford or not want to pay the premium and be forced or elect to go naked, but can the risk say that product liability insurance is unavailable? No, insist the PLII and NAIC. It is available.

'Available to whom?' we asked. Why, we are told, to those who are manufacturing quality products which do not prove to be dangerous to the safety of the user; to those who manufacture innocuous products, to those who are able to absorb or pass along any product liability price increase to their customers; to those who are deserving businesses, to those who are not in any business difficulty; and to those who can afford increasing deductibles, decreases in coverage, retro-active rating and self-insurance layers.

MAP represents an effort by the PLII to show that if there is a problem which required PLII attention and action, it is an Availability problem and that Availability is being taken care of by the voluntary market, except in those limited cases where there is an Affordability problem.

The Consumers Union observed:

A comprehensive study of the insurance industry and the effects of the McCarran-Ferguson Act appears to be necessary. The repeated problems arising in many areas of insurance, of which product liability is only one example, seem to call for a comprehensive analysis of the state regulatory system. This analysis should not be limited to the product liability area.

Rather than intervention into state laws, the federal government should collect and distribute information concerning product injuries and product liability claims in order to assist state regulators and insurance companies in setting statistically sound premiums. In addition, we support the recommendation for a program for more effective distribution of product risk information to manufacturers, distributors and retailers.

The Metropolitan Dade County Consumer Advocate stated:

While the general "hands-off" policy of the McCarran-Ferguson Act retains some merit, such a policy should not stand in the way of affording manufacturers, insurers and consumers alike minimum, nationally uniform ratemaking standards. Fairer premiums would result, and the success of such a policy would lead the way for other federally initiated standards in the ratemaking arena. Most importantly, however, insurance costs factored into product prices with such standards in effect would result in more realistic, if not significantly lower, retail prices.

The Administration has directed that the insurance report be prepared. The scope of the report is set forth in the Background Paper, included as Appendix A.

2. *Draft a model product liability law that could be implemented at the federal level or utilized by the states.*[13]

Recommendation 2 drew a great deal of public comment. Most product sellers sought "reform" on specific issues such as the statute of limitations, the relevance of the state of the art, compliance with administrative standards, restrictions on damages (e.g., punitive damages and damages for pain and suffering), etc. A number of product sellers accepted or urged a federal role in reforming the tort law—an area which has traditionally been left to the states.

Representatives of insurance companies and regulators generally viewed the states as capable of accomplishing the necessary legal changes, and see "reform" as already being accomplished at the state level. Most insurer trade associations subscribe to the theory that experimentation by the states is desirable—thereby eliminating any federal role. Several groups—both insurers and manufacturers—have developed model tort provisions which they advocate. Representative comments follow.

The comments of the AAI and the IIAA indicate the insurance industry's preference for state reform of the tort-litigation system. In that regard, the AAI stated:

We take the position that any modification of the tort system should be left up to the states. There is a need to experiment, on one hand, and each state has unique requirements that cannot be accommodated in any simple model law.[14] Our principal concern here is the potential development of federal tort standards which we have traditionally opposed.

Similarly, the IIAA downplayed the need for a model statute:

States are also able to write their laws to reflect the unique conditions in their particular area. A law that is quite successful in one jurisdiction may be totally unsuitable for another. Statutory experimentation is possible only on the state level, and such experimentation will yield the best solutions.

A model products liability statute may be helpful, but is really unnecessary in light of the numerous model bills now in existence. The states have more than enough material on which to base tort law reforms.

The IIAA also disputed any contention that state legislative activity has been "pro-industry and anti-consumer."

In contrast to the argument in favor of diversity at the state level, the NAIC, which represents state insurance commissioners, found that the states' actions were bringing needed consistency, obviating the need for a federal model code:

An analysis of the product liability laws under consideration or passed by the various states shows a surprising similarity in addressing tort changes. This fact and the tradition of states addressing tort law negates the need to pursue this proposal.

The AIA concurred, stating that:

A federal model product liability law is not necessary at this time. As the attached report on state product liability legislative activity shows, the proposed tort reform in most instances covers the major areas of concern. The similarity of the approach and the basic provisions of this legislation disputes the Department of Commerce's contention that there is a 'hodge-podge' of current state initiatives.

On the issue of the need for uniformity and the efficiency of independent action at the state level, a Connecticut defense lawyer took a sharply different view:

State Legislatures are being made aware of the problem and they are slowly responding to it. However, as indicated by the enclosed pages from "Products Liability Reports" for April 14, 1978, they respond in different ways. This is too large and important a matter to be handled on a State by State basis. It requires one law which applies throughout the United States and the reasons for this are well expressed in the "Con" portion of the Report under "1," "Improvement of the Tort-Litigation System."

A major insurance company, the Insurance Company of North America (INA), took a similar stance:

First, INA believes, as does the Department, that the development of a uniform product liability law is a basic issue and that the need for attention to be focused on improving the tort litigation system is urgent.

One producer of industrial products saw the model law as an aid to consistency:

One possible option, the drafting of a model law bringing in questions of statute of limitations, state of the art, modification of product, compliance with established standards, limitations on awards, collateral source rules, sanctions against frivolous claims, and restrictions on noneconomic and punitive damages might help to generate activity at the individual state level in a fairly consistent manner.

A certain ambivalence—typified by the comment of the Machinery and Allied Products Institute ("MAPI"), a trade association representing ma-

[12] Property Liability Insurance Industry.

[13] See 43 FR 14612, 14616-17, 14624 (1978).

[14] The AIA provided the Commerce Department with its model tort reform package.

chine tool manufacturers—was evidenced in the reactions of many respondents to this recommendation:

It is obvious that this recommendation avoids the very difficult question of whether or not remedial legislation should be enacted at the federal or state level. It may be that this recommendation's 'two-way stretch is no more than a practical recognition of political reality. The Department has recommended that the project here envisioned be undertaken with the presumption that the Administration would recommend the bill to be devised to the Congress.

This presumption apparently rests upon the conclusion that, 'Commercial necessity requires uniformity at least in key areas such as the length of time a manufacturer is responsible for his product, the relevance of a product user's conduct with respect to tort awards, and punitive damages.' We agree with this conclusion and with the inference that a presumption favoring a federal solution is thereby raised.

If, on the other hand, federal legislation cannot be passed or if such a solution is unduly delayed, we do not want to have this statement of our position construed to mean that we oppose action at the state level. Indeed, we note that an increasing number of states are legislating in the products liability area and we applaud such action, provided, of course, that state enactments are reasonably sound. It has long been a theory of American political science that the 50 states provide a laboratory for legislative experimentation. We believe the federal system continues to function in this manner very well.

But several respondents sought immediate action as, for example, this machinery distributor did:

The present lack of any Product Liability laws has everybody suing everybody even though they don't know why: just that someone got hurt. They hope a jury might be sympathetic.

We might be put out of business because we sold a machine, and someone else put on a faulty electrical switch. This was after we sold it. We are being carried along in the case and being presented to the jury as having done something wrong. We don't know what we could have done differently.

Please get us some laws on Product Liability.

The Office of the Consumer Advocate of Dade County, Florida noted, "The conflicts engendered by the interstate criss-crossing of products would be ameliorated by homogeneous legislation."

The Consumers Union observed:

Assuming the model law proves to be equitable and not simply a device for drastically limiting manufacturers' liability, and assuming most states followed the model, this seems to be a sensible step toward a uniform method of handling product liability cases.

The Administration has directed that a model product liability law be prepared.

3. *Draft legislation for federal standards in the area of Worker Compensation should include a provision that would render Worker Compensation a sole source of monetary recovery for workers injured in product-related accidents.*[15] This Commerce recommendation was put forth in recognition of the serious impact of the product liability problem upon manufacturers of products used in the workplace. That impact is evidenced by ISO's finding that, while workplace accidents represent only 11 percent of product liability claims, they constitute 42 percent of all product liability bodily injury payments. Commerce concluded that the ongoing development of federal Worker Compensation standards by the Department of Labor provided an opportunity to resolve the product liability problem in the workplace. Therefore, it recommended that legislation containing any such standards should include a provision rendering Worker Compensation the sole source of monetary recovery for workers injured in product-related accidents. Since there was some confusion on this point in the public commentary, it is important to emphasize that neither the department of Commerce in making this recommendation, nor the Administration in adopting it, has yet endorsed proposals for federal standards for Worker Compensation.

Manufacturers and distributors of workplace products, as well as their representatives, overwhelmingly supported this recommendation, as did the comments forwarded by the British Embassy. Most of the product sellers seemed willing to contribute to the workers' awards when their products were at fault. They opposed the current system because they believed that it places an unfair burden upon manufacturers of workplace equipment. For example, the American Textile Machine Association ("ATMA") stated that:

The members of ATMA need relief from unjust hardships caused by the existing compensation structure for injuries resulting from industrial workplace accidents. Through a combination of inadequate Workmen's Compensation benefits and the use of the courts as a means of compensation, the machinery manufacturer has been unjustly forced to bear the brunt of compensating injured workers.

Under Workers' Compensation laws, the employee is prohibited from suing his employer, thus there is a built-in incentive to seek additional redress, by means of a products liability lawsuit, against a third party manufacturer regardless of fault. Except for a few states, the machinery manufacturer/defendant in a products liability lawsuit cannot seek indemnification or contribution from the employer, regardless of the degree of the employer's culpability. Manufacturers of industrial equipment have been unfairly subjected to skyrocketing litigation and insurance expenses without recourse.

Unless relief is forthcoming, ATMA members face the debilitating prospects of further increase in expenses which contribute to the inflationary spiral, add restrictions on the industry's ability to invest funds in research and development, and in some instances actually threaten the economic viability of certain corporations.

Inadequate Workers' Compensation benefits and the statutory shield protecting employers from suits brought by either the injured employee or the manufacturer for contribution or indemnification, along with the increased case of recovery under present law have produced a disproportionate shift of financial responsibilities for workplace injuries from the employer to the manufacturer. Employees injured in the workplace may collect Workers' Compensation from their employers and sue the manufacturer of the machinery which was involved in the injury.

ATMA believes that the sole source remedy would substantially reduce product liability insurance premiums by creating certainty in the process and eliminate the delays and enormous costs associated with product liability litigation.

Many manufacturers of workplace products emphasized the waste caused by the present system because of its duplicative legal and transaction costs. Others pointed to the small number of workers who benefit under the present system and to the increased product safety that would result from the Commerce proposal. For example, the National Machine Tool Builders Association noted that:

The Interagency Task Force study on Workers' Compensation [16] reveals that only 2.1% of some one and a half million Workers' Compensation claimants proceeded against a third party in an effort to recover an amount of money in excess of their Workers' Compensation benefits. Our own data gethered in 1976 and updated earlier this year reveals that only 3% of the Workers' Compensation claims against our members resulted in courtroom recoveries substantially in excess of the applicable Workers' Compensation benefits. Interpolating the results of these two studies would indicate that we are in effect today maintaining a workplace Products Liability tort litigation system for the benefit of 900 people and their lawyers.

Although 900 workers would lose their right to successfully sue third parties under your proposal the remaining 1,499,100 annual WC claimants would receive benefits, in many cases, much greater than those currently available. The Workers' Compensation insurance carriers, who are today recouping their costs 43% of the time from our members (regardless of employer fault in most States) would no longer be able to do so. Your proposal would end this "lottery" and would have the further effect of greatly diminishing legal defense and investigation costs which ISO estimates run about 35¢ for every dollar paid out for a Products Liability award. We believe that this resultant massive decrease in defense and settlement costs will encourage reputable insurers to once again offer adequate Products Liability coverage at affordable rates.

[15] See 43 FR 14612, 14617-18, 14624 (1978).

[16] Report to the President and the Congress of the Interdepartmental Task Force on Workers' Compensation. "Workers' Compensation: Is There a Better Way?" (1977).

The American Machine Tool Distributors Association noted that:

One of the surest ways to increase employer safety awareness and reduce employee accidents would be to place the economic burden of such accidents upon the party or parties who are at fault, whose act or failure to act caused the employee injury. That party also is likely to be in the best position to eliminate hazards, and placing the economic burden on his shoulders will ensure that he has the greatest incentive to do so. In most cases that party will be the employer—in some cases it may be the machinery manufacturer and seller—and in a few cases both or all three parties may be deemed responsible.

The principal objective of the recommendation, of course, was the expected impact upon the cost and availability of product liability insurance. The Scientific apparatus Manufacturers Association ("SAMA") concluded the following:

SAMA believes that if workmen's compensation was made the sole source of monetary recovery in cases of workplace injury, insurance companies would recognize the consequent reduction of risk to their own business and modify their policies accordingly. As a result, workplace product liability insurance would once again be available for most companies at a reasonable cost. We commend the Department of Commerce for its recommendation of this solution.

Some product sellers were opposed to Federal standards for Worker Compensation and, therefore, were opposed to Commerce's recommendation. Others, who favored the recommendation, urged that Federal involvement be limited to the promulgation of standards and that the administration of the Worker Compensation system be left to the States. In that regard, a consumer goods producer commented:

While we see some standardization in this area occurring now among the States, undoubtedly a Federal standard or guidelines would be helpful. However, we feel strongly that the administration of Workers' Compensation should remain with the States with the Federal Government's only involvement being that of setting standards or guidelines.

Finally, some product sellers were concerned about the mechanics of the Commerce approach. For example, MAPI commented on Commerce's suggestion that manufacturers of defective workplace products contribute to Worker Compensation awards through a post-accident arbitration proceeding as follows:

This would seem to us to have two serious drawbacks. First, it introduces an element of uncertainty which changes what should be a clear and final decision (i.e., the award of Worker's Compensation benefits) into one that is unclear and not final. Second, arbitration proceedings can be very nearly as expensive for the parties—including the plaintiff—as ordinary litigation so that the reduction of "transaction cost"—an advantage of this remely which has always appealed to us—would be largely negated.

Few producers of consumer products commented on this proposal even though their Worker Compensation insurance rates could increase as a result of its adoption. Moreover, no consumer or labor groups commented.

Most comments from insurance interests were negative about the proposal, the principal objection being the traditional State dominance in the Worker Compensation area and the increasing worker benefit levels in most States.

The Chairman of the NAIC Task Force on Product Liability observed:

This issue is being addressed in State tort reform packages. It should be recognized in regard to benefit levels that they are rising. Again this area being the traditional prerogative of State legislatures. This approach may also serve as a disincentive for safety and risk prevention to manufacturers fo workplace products.

The IIAA opposed the concept, noting the adverse impact on Worker Compensation insurance rates:

One negative aspect of this reommendation is that employers would be burdened with greater costs for worker compensation insurance. In fact, the Interagency Task Force Report recognized that the insurance cost savings rendered by the sole source remedy might be more than cancelled out by the cost of providing workers with a substantial across-the-board increase in worker compensation (Chapter VII, pp. 68-91). The result might be a shift of the problem from one area of insurance to another.

The AAI stated that it opposed the recommendation because:

The problems now affecting the workers' compensation system would, we are convinced, be exacerbated by any system of Federal workers' compensation standards or by further increases in compensation benefits.

Higher workers' compensation benefit levels to compensate for reduced access to the tort system for product liability can in no way be considered a potential solution to the problem.

The AIA emphasized that State worker benefits were already rising and offered a proposal of its own:

While we agree with the Department of Commerce that the workplace injury is a vital part of the product liability problem and that efforts toward curing it will be well received by the machine tool and related industries, we are not convinced that the approach recommended by the Department of Commerce is the most effective or equitable route. . . .

The blanket protection given to manufacturers of defective products causing injury to innocent workers may result in disincentives for safety and risk prevention. The Department, in its discussion of the recommendation, suggests that 'Federal standards can also incorporate a means whereby product manufacturers contribute (through a post-accident arbitration proceeding) to the worker's compensation award when the injury arose because of a defective product.' (p. 48). This approach is intended to reduce transaction costs associated with the tort litigation system but there are costs involved in the arbitration approach also. The result is not dissimilar to the present subrogation approach.

. . . [T]here is an approach that would reduce transaction costs. The American Insurance Association has proposed that the plaintiff be allowed to sue any liable third party and from any sum that the plaintiff may recover there will be a deduction in the amount of any workers' compensation which the plaintiff has received. The employer is not brought into the suit as a party to the litigation and is not entitled to a lien or to bring an action by way of subrogation. The court is saved the expense and difficulty of adjudicating the fault of the employer. The employer is saved the expense of becoming involved as a party. The areas for consideration for the jury are eased. The plaintiff's recovery is not reduced but the amount paid by the product liability defendant is lowered.

. . . One must also take a look at what it does in terms of injury prevention. The injury prevention thrust of any product liability action arising in the workplace will affect both employer and the third party. There will be a recovery against the manufacturer of the product which caused injury. That manufacturer, therefore, will receive motivation to improve its product through the tort system. The employer, no longer able to transfer its costs, will also have to allocate the cost of injury prevention. This means that the negligent employer will no longer be able to write off its negative experience and charge it to the product liability system. It will have to correct its own defects. The non-negligent employer will have to also review its operation. It will have to determine what actions can be taken to prevent injury even though it is caused by the negligence of others. . . . The employer will not be inclined to purchase machines made by negligent manufacturers. If the theory underlying the tort litigation system, that recovery for injury increases incentives for accident prevention, is correct, then the exclusive remedy based on workers' compensation is illogical.

The Administration has asked the Department of Commerce to draft a provision that might be used in conjunction with any worker compensation reform effort that included adequate benefits and expanded coverage for workers suffering product-related accidents in the course of employment.

4. *A study should be conducted to determine whether a practical no-fault product liability system can be developed, in whole or in part, for consumer products.*[17]

This was the only recommendation in which the Department suggested that further study was necessary. The study would have attempted to resolve the problems associated with a no-fault product liability system that were identified in the Final Report of the Interagency Task Force on Prod-

[17] See 43 FR 14612, 14617-18, 14624 (1978).

uct Liability.[18] There was little comment concerning this proposal. Insurers opposed it, and the few comments from producers and sellers were divided.

One trade association stated that, while many of its members manufactured primarily workplace equipment, they also has a significant consumer product liability exposure:

A large number of those would like to see some kind of no-fault approach taken in that area—something on the consumer side similar to the system that would exist if workmen's compensation were made the exclusive remedy in cases of workplace injury. We urge that an investigation of the feasibility of such a system be undertaken as soon as possible, and we would like to provide whatever assistance we can to those who will be involved in that effort.

A consumer organization also supported the study:

We also favor a study of no-fault insurance. No-fault has worked well in many areas for automobile insurance. It potentially could reduce the substantial costs of the present tort system. There are many problems which must be resolved before a no-fault system could be instituted. As the Final Report concluded, this solution requires considerable additional study. We support such an effort by the Task Force.

The Chairman of the NAIC Task Force on Product Liability did not regard further study as worthwhile. He stated that:

The Department has ignored many of the problems outlined in the Interagency Task Force Report for this remedy. For instance, how are the incentives for risk prevention preserved? In addition a no-fault system for a *single* line of liability seems narrow, especially when this line is marketed as a package to many businesses. Although further study might address these problems, sufficient obstacles exists to suggest it may not be a profitable pursuit.

The IIAA expressed concern that a no-fault system might be a disincentive to product safety:

An automobile accident is a one-time occurrence in which the issue of fault hampers the goal of compensation. Products liability law involves more than just the compensation of victims; it also must deal with the possibility that a manufacturer will continue to produce defective products which will cause a number of accidents.

The IIAA endorsed the study but cautioned that any no-fault system should be implemented at the state level.

The INA saw value in the research, saying:

[W]e believe that research into the possibility of no-fault compensation for product related injuries to consumers is useful and may reveal additional approaches for dealing with this fairly and efficiently . . .

The AAI was less sanguine about the possible results of such a study:

To date, we have yet to see any feasible proposal for product liability no-fault. We feel that no-fault for product liability would be a radical departure from the tort law and is not warranted despite high transaction costs to adjudicate and settle product claims. The tort system, as we observe it today, certainly has its flaws, but we believe these flaws can be rectified without replacing the entire system with a no-fault approach.

The AIA expresed similar concerns:

The report of the Interagency Task Force to the Department of Commerce outlined some problem areas inherent in a no-fault product liability system. These are serious problems that have not been resolved in any way. Injury causation, how to preserve incentives for risk prevention and administration of the proposed system would remain major obstacles to product no-fault. None of these were considered as 'cons' by the Department in its discussion of options. As noted previously in the discussion of workers' compensation as a sole remedy in product cases if the purpose of the tort litigation system is to produce proper incentives for risk prevention, a no-fault proposal defeats that purpose.

The Administration did not endorse this proposal at this time; individual agencies that may have an interest in the study could utilize existing resources to further pursue this line of study.

5. *A program should be developed whereby the Federal Government more effectively distributes product risk information to manufacturers, distributors, and retailers.*[19]

Insurers generally supported this recommendation. The AIA and the IIAA observed that many Federal agencies already accumulate such information. The NAII felt that the proposal should be explored further. The AAI, however, had some reservations:

The role of the Federal Government should certainly include making product data it has already developed *available* to private industry. One must question, however, how actively government should be in assuming the principal responsibility for *broad scale distribution* of such data, and of educating the public on product pitfalls.

Two business organizations expressed concern about the use of information that might be obtained in such a program. MAPI said:

To the extent that the proposed distribution of product risk information might lead to a reduction in product-related accidents, we support it of course. No one could oppose it. However, the recommendation contains a possibility of dangers which may have been overlooked by those advancing it. We have in mind the very real possibility that such a system for the distribution of product risk information could unintentionally become the medium for dissemination of extremely valuable confidential business information. In any event, it would necessarily add another burden of reporting in the face of an announced Administration drive—supported we think by public opinion—to reduce the cost and burdens of government.

If adopted, this recommendation should include safeguards to prevent this kind of improper dissemination of proprietary business information. Given the government's recent track record in the protecting of secrets, one wonders if the creation of such safeguards is even possible.

The Outdoor Power Equipment Institute ("OPEI") commented that:

OPEI is particularly leery of the Task Force's recommendation (No. 5) that a program be developed whereby the Federal Government would distribute product risk information. We note that in the second paragraph under this recommendation, the Task Force states: 'The CPSC (Consumer Product Safety Commission) is presently seeking additional ways whereby industry and the organized bar might bring product risk information to the attention of the Federal Government.'

Is the Task Force familiar with the requirements of section 15 of the Consumer Product Safety Act? Is the Task Force familiar with the proposed (September 16, 1977, 42 FR 46720) regulations under that section of the CPSA? The Task Force is correct that CPSC is seeking additional 'reports.' The goal of the newly-proposed regulations, however, is *not* sharing information with other manufacturers, but easing the agency's prosecutorial burden. The agency is *not* seeking the good of the potential victim, but the improvement of its own image. OPEI thinks that the Task Force would be badly misled if it were to place much reliance on recent CPSC 'overtures' seeking increased reporting.

The Administration decided that the Federal government should attempt to more effectively distribute product risk information to manufacturers, distributors, and retailers. The Administration asked Commerce to work closely with the Consumer Product Safety Commission, the Department of Labor, HEW, and other appropriate agencies in promoting such efforts.

6. *Develop a special loan program that would permit qualified small businesses to obtain product liability loss prevention technical assistance.*[20]

Only four comments were offered concerning this recommendation. A large manufacturer strongly encouraged the Department to "move ahead rather aggressively on it," stating:

We believe that nearly all manufacturers, small or large, want to market a safe product but many times, particularly in small businesses, they do not know what the problems are and therefore are operating at a disadvantage. A special loan program could provide them with the means to determine the problems at an early date and to make the necessary modification.

The IIAA supported the recommendation, noting:

Manufacturers must take an active role in assuring the safeness of their own product. Insurers can help, but the ultimate responsibility must be with the manufacturer.

[18] See Interagency Task Force on Product Liability *Final Report*, VII-202-VII-229 (1977).

[19] See 43 FR 14612, 14615, 14625.

[20] See *Id.*

A large chemical manufacturer found the proposal "too vague" and reserved judgment until more details on cost and implementation are available, while a consumer group said:

We are hesitant to support a loan program for small business to provide expert assistance for quality control without a greater demonstration that this solution is needed and will result in safer products to consumers. Long-Term Recommendation No. 6. We are not convinced that most small companies cannot afford to purchase such expertise without federal assistance, and would not do so if they perceived it to be in their economic benefit. The better solutions are those that would provide economic incentives for manufacturers to make safe products and provide the manufacturers with the necessary information to act on their own. We do not believe that federal funds should be used to support marginal producers of unsafe products.

This recommendation was not adopted by the Administration.

7. *Legislation should be drafted that would permit the formation of captive insurance companies in the area of product liability.*[21]

While this recommendation did not receive a large number of comments, it is apparent that the concept of captive insurance companies has attracted a good deal of attention.

MAPI supported the recommendation:

Its adoption would permit some companies, to whom products liability insurance is unavailable at affordable prices, to enlarge the availability of such coverage by their own acts.

As you know, the Internal Revenue Service has held in Revenue Ruling 77-316 that premiums paid to certain offshore (foreign) captive insurance companies may not be deductible because there has been no 'risk-shifting or risk-distributing.' This holding is directly related to the options paper recommendation of tax deductibility for contributions to a self-insurance reserve, and it magnifies the very difficulties which gave rise to that recommendation. The ruling may drive the parent of the captive back into the domestic insurance market, keeping pressure which is already drum-tight, and making the situation even more difficult for small companies for whom captives are not a realistic alternative. If the self-insurance approach recommended by the options paper is to be fully effective, Revenue Ruling 77-316 must be revoked by administrative action or, if necessary, by legislation.

We observe that if it is desirable to enlarge the options paper to include other 'Accident Compensation issues,' would it not be equally desirable to enlarge the scope of this recommendation to authorize the chartering of captive insurance companies in property and casualty fields beyond products liability?

One large company observed that:

Enabling companies to establish captive insurance organizations could result in greater competition to the established insurance companies.

The British Embassy, however, opposed steps taken to facilitate self-insurance because of the adverse impact of the proposal on the efforts of insurers to collect claims data and the difficulty in setting proper rates.

The Department will develop a proposal to facilitate group self-insurance as a part of the insurance report (Recommendation 1) requested by the Administration.

8. *Administrative or legislative guidelines should be developed that would assist private insurers in the formation of voluntary insurance pools. Legislation that would require insurers to pool product liability insurer risks should not be developed at this time.*[22]

This proposal received little comment. One consumer group cited the potential anti-competitive effect. It offered limited support for the concept because it felt that safeguards could be incorporated into the guidelines to promote competition and because some companies with a product-liability problem might be able to obtain coverage through such a mechanism. Two insurer trade groups and the Chairman of the NAIC Product Liability Task Force observed that Market Assistance Programs set up in several States are voluntary pools and that therefore the proposal was not needed.

The major insurer trade associations concurred with Commerce that mandatory pooling was inadvisable. The Administration took no action in favor of mandatory pooling; it left the matter of establishing guidelines for voluntary pooling to interagency cooperation. The Department of Justice has indicated that guidance in establishing insurer-formed voluntary pools is available through the Antitrust Division's Business Review Letter Procedure.

9. *The Administration should establish an interagency council on accident compensation. The council would have the initial responsibility for reviewing and coordinating Federal initiatives in the area of accident compensation.*[23]

This proposal did not receive a great deal of comment. Six product sellers endorsed it, while two opposed it.

A major chemical manufacturer said:

We would oppose the establishment of an interagency council on accident compensation with the responsibility for reviewing and coordinating federal initiatives in the area of accident compensation for the same reasons we oppose other legislative efforts currently being considered by the Congress with respect to compensation boards for victims of toxic chemical exposure, to wit, because we believe that these problems are better left to self-regulation, which takes into consideration actual working conditions, is less costly, and can be more efficiently policed. In the alternative, we would prefer state, rather than federal regulation, due to the state's inherent familiarity with local manner and custom and their ability to communicate internally which enables them to resolve conflicts in the most expeditious manner.

MAPI said:

This appears to be a recommendation with some merit, although it raises the possibility—which the accompanying discussion recognizes—of an unwieldy mechanism. We think this possibility is made more likely by the addition to the project of other "Accident Compensation Issues" covering a diversity of subjects and a considerable number of government departments. Beyond that, it raises in our minds once again the dangers of the unwarranted dissemination of business secrets adverted to above.[24]

Insurers and insurance regulators were divided in their comments. The AAI observed that such a proposal was "probably long overdue." The AIA, however, saw the Council as a vehicle for endless studies, saying that:

We are not sure of the value of studies in an area where numerous other studies have been undertaken. Further studies, we feel, should include the private sector.

The IIAA similarly saw it as a study group and said it should include state and private participation. The NAIC pointed to its success in coordinating state initiatives in the regulation of insurance and endorsed the Federal Government's pursuing a coordinating role in the accident compensation area.

The INA observed the underlying purpose of the proposal. It stated:

We believe that the [Commerce] Department's frank comments on the lack of coordination and cooperation at the federal level are a refreshing and important admission. Intergovernmental cooperation is vital if we are to avoid future confusion and lack of consistency within the federal establishment * * *.

The Administration has asked Commerce to convene such a council.

APPENDIX "A"

BACKGROUND PAPER

On July 20, 1978, Secretary of Commerce Juanita M. Kreps announced the first federal program to address the serious economic problems caused by escalating product liability premiums. Speaking for the Administration, she said:

"This is a balanced program which will relieve the product liability problem for American businesses while fully respecting the rights and interests of consumers."

Serious product liability problems have affected thousands of small businesses that have had great difficulty in obtaining affordable product liability insurance. The problem has also affected consumers because insurance costs have been passed on to them

[21] See *Id.* at 14620-21, 14625.

[22] See *id.* at 14620, 14625.

[23] See *id.* at 14621-22, 14625.

[24] MAPI had expressed concern about the disclosure of confidential company information in connection with the sharing of product risk information.

in terms of higher prices. Consumer groups have also been concerned about restrictive new state laws that have attacked the problem by limiting the rights of persons to recover damages for injuries caused by defective products. Finally, insurers have expressed concern about court rulings imposing substantial damages in product liability cases.

Basis for Program

The solutions evolved from an 18-month interagency study followed by a Commerce Department Options Paper suggesting remedies. The administration authorized the publication of the Options Paper last April and sought public comment on the Commerce proposals. Commerce received over 400 replies representing close to 10,000 businesses. Consumer and insurer groups also responded to the Commerce Options Paper.

Secretary Kreps indicated that she was pleased to see that "the overwhelming majority of businesses were not looking for a 'federal handout' to resolve the problem." These businesses agreed with the Commerce Department that a federal insurance or reinsurance program was not the solution.

Tax Proposal

As a short-range measure, the Administration proposes extending the carryback period for net operating losses attributable to product liability and related costs. The general carryback period under the Internal Revenue Code is three years—the Administration has proposed extending it to ten. It will also consider an amendment to the Code increasing the number of years to which such a loss can be carried forward. Furthermore, the Departments of Commerce and Treasury are reviewing current law on the accumulated earnings tax to the extent that it affects accumulations to provide for product liability losses.

Secretary Kreps observed that the proposal will help ensure that a manufacturer will not be forced out of business because of a product liability judgment. Many such judgments are substantial and unanticipated.

If product liability judgments or settlements give rise to or increase a net operating loss, the proposed amendment will permit the firm to apply the product liability loss against taxable income earned during the ten preceding years. It will provide for an immediate refund of taxes paid during those years and will tend to ensure that taxpayers will be in a position to realize promptly the tax benefits of deducting the loss. This will also help ensure that a person injured by a defective product will be able to collect a prodcut liability award.

Under the proposal, a business having problems with insurance affordability may be able to buy insurance with a larger deductible. It could rely on cash it has on hand plus the tax refund from carrying the loss back to prior taxable years to cover retained risks. Treasury had developed this proposal in response to the serious and unique interstate economic impacts of the product liability problem, including the fact that product liability exposure extends to a wide spectrum of taxpayers and may result in unanticipated losses of significant magnitude. The proposed amendment would be limited to product liability.

Because of cost factors and concerns about a questionable precedent, the Administration has endorsed the loss carryback proposal rather than a proposal which would have permitted businesses current tax deductions for contributions to product liability self-insurance trusts. The Administration believes that the carryback is simpler, both for affected taxpayers and the Internal Revenue Service. It will provide the same benefits, other than deferral of taxes, as a current tax deduction for contributions to a self-insurance trust.

While the Department of Commerce had supported the deferral approach, Secretary Kreps stated that the carryback alternative "may result in a better use of business capital, since funds would not be required to be maintained in a segregated low-yield fund."

Attacking the Causes of the Problem

Secretary Kreps also stated that, "The Administration has sought to attack the basic causes of the product liability problem, rather than camouflage them with various short-range solutions." The Commerce Department, as the result of its interagency study, found that the causes of the problem were: uncertainties in the tort system, problems with insurance ratemaking practices, and the manufacture of unsafe products. The Administration will pursue Commerce recommendations aimed at each of these causes.

Uniform Product Liability Law

To attack uncertainties in the tort system, the Administration has directed that a model uniform product liability law be prepared. Secretary Kreps said:

"While this is a major effort, it will be completed promptly. We will seek advice from the states as well as the different interest groups affected by the product liability problem. We want to draft a balanced code that will add needed stability to product liability law."

Workplace Injuries

"A serious problem within the tort system is product liability suits that arise out of workplace accidents." When an accident involving a manufactured product occurs in the workplace, the worker is usually eligible to collect Worker Compensation. The worker may also bring a claim against the product manufacturer. The net result may be that the product manufacturer pays the entire cost of the worker's award, even though the employer's negligence was a substantial cause of the injury. The overlap of tort and Worker Compensation systems has been costly. A recent survey showed that while workplace accidents represent only 11 percent of product liability claims, they result in 42 percent of the amount insurers pay in settlements and judgments. The duplicative transaction and legal costs result in a good deal of waste. Secretary Kreps observed:

"Overall Worker Compensation proposals now being considered by the Labor Department provide an ideal climate for addressing the workplace product liability problem. The Department of Commerce will propose a provision affording relief for product manufacturers as a part of any Administration Worker Compensation legislation. The provision would insure, however, that the manufacturer of a deficient product makes an appropriate contribution to pay for the worker's claim."

The provision would be part of any Worker Compensation reform effort that would include adequate benefits and expanded coverage for workers suffering product-related injuries in the course of employment.

Insurance Ratemaking

To address problems in liability ratemaking procedures, the Administration has called for a report that would include draft product liability insurance regulation standards. The report would, among other things, evaluate:

"The appropriate federal role in product liability insurance.

"The effectiveness of initiatives by state regulators and the insurance industry to address the problem.

"Whether product liability premiums can more closely reflect actual product risk, e.g., extending experience rating to small business.

"Whether insurance problems may be eased by facilitating the formation of self-insurance groups."

Manufacturing Practices

To help ensure the manufacture of safe products, the model uniform product liability law will preserve existing incentives in the tort-litigation system. The Administration has also called for a cooperative effort "whereby the Federal Government would more effectively distribute product risk information to manufacturers, distributors, and retailers. At the same time, the Administration urges industry to voluntarily disclose information regarding product risks of which they become aware to product manufacturers and concerned government agencies." Commerce would work closely with the Consumer Product Safety Commission, the Department of Labor, HEW, and other appropriate agencies in promoting such efforts.

Coordinate Accident Compensation Issues

Finally, the Administration approved Commerce's proposal to improve the coordination of federal accident compensation initiatives. Secretary Kreps observed:

"Problems relating to accident compensation are unlikely to fade away in the next few years—in point of fact, all signs suggest they will grow worse. There already is a multiplicity of federal legislative and research initiatives being undertaken in the area of accident compensation.

"Therefore, the Administration will form an Interagency Council composed of agencies that have had substantial experience with respect to problems relating to accident compensation. Some of these agencies include DOL, DOT, HEW, and the Federal Insurance Administration of HUD. Also included on the Council will be the Office of Management and Budget, the Council of Economic Advisors, and the Office of the Special Assistant to the President for Consumer Affairs. The Council would:

(1) Inventory present programs and initiatives;

(2) Serve as a clearinghouse for research on accident compensation and insurance issues;

(3) Serve as a forum for discussing legislative initiatives in the accident compensation-insurance area, and

(4) Serve to identify expertise on this subject matter within the Federal Government."

The Department of Commerce will convene the Council and direct the product liability initiatives.

[FR Doc. 78-25616 Filed 9-8-78; 8:45 am]