Vol. 44—No. 13
1-18-79
PAGES
3669-3942

# federal register

THURSDAY, JANUARY 18, 1979

## highlights

**IMPORTANT NOTICE TO FEDERAL AGENCIES**

For information on billing codes required on all documents submitted for publication in the Federal Register, see back cover of this issue.

**LOW INCOME HOUSING**

HUD issues interim and final rules amending contract rent annual adjustment factors; effective 11-8-78; comments by 2-20-79 (Parts IV and V of this issue) ..... 3908, 3912

**LAW-RELATED EDUCATION**

HEW/OE announces availability of draft of proposed regulations implementing act of 1978 ..... 3732

**MAIL**

PS makes temporary change in classification schedule establishing third-class carrier route presort subclass ..... 3797

**FEDERAL CREDIT UNIONS**

NCUA proposes to amend nondiscrimination in lending regulation; comments by 2-28-79 ..... 3722

**SMALL BUSINESS CONCERNS**

OMB/FPPO issues proposed policy letter requiring that procurement solicitations resulting in a contract of $10,000 or more indicate Federal law or agency rule citation on which each provision is based; comments by 2-15-79 ..... 3796

**AIR POLLUTION CONTROL**

EPA issues proposed policy statement on alternative emission reduction options within State implementation plans; comments by 3-19-79 ..... 3740

**NATURAL GAS POLICY ACT OF 1978**

DOE/FERC proposes regulation implementing requirement that interstate pipeline curtailment plans protect essential agricultural uses; comments by 2-26-79 ..... 3725

**NUCLEAR POWER PLANTS**

NRC considers amending codes and standards providing for improved, updated methods for inservice inspection; comments by 3-5-79 ..... 3719

**POWERPLANT AND INDUSTRIAL FUEL USE ACT OF 1978**

DOE/ERA announces public hearings on proposed rules concerning new facilities; hearings on 2-7, 2-8, 2-14, 2-15, 2-21, 2-22, 3-1 and 3-2-79; comments by 3-2-79 ..... 3721

**REFINED PETROLEUM PRODUCTS**

DOE/ERA adopts special rules in a standby status governing allocation and pricing during a supply shortage; effective immediately; comments by 3-16-79 (Part VI of this issue) ..... 3928

CONTINUED INSIDE

# AGENCY PUBLICATION ON ASSIGNED DAYS OF THE WEEK

The following agencies have agreed to publish all documents on two assigned days of the week (Monday/Thursday or Tuesday/Friday). This is a voluntary program. (See OFR notice 41 FR 32914, August 6, 1976.)

| Monday | Tuesday | Wednesday | Thursday | Friday |
|---|---|---|---|---|
| DOT/COAST GUARD | USDA/ASCS | | DOT/COAST GUARD | USDA/ASCS |
| DOT/NHTSA | USDA/APHIS | | DOT/NHTSA | USDA/APHIS |
| DOT/FAA | USDA/FNS | | DOT/FAA | USDA/FNS |
| DOT/OHMO | USDA//FSQS | | DOT/OHMO | USDA/FSQS |
| DOT/OPSO | USDA/REA | | DOT/OPSO | USDA/REA |
| CSA | MSPB*/OPM* | | CSA | MSPB*/OPM* |
| | LABOR | | | LABOR |
| | HEW/FDA | | | HEW/FDA |

Documents normally scheduled for publication on a day that will be a Federal holiday will be published the next work day following the holiday.

Comments on this program are still invited. Comments should be submitted to the Day-of-the-Week Program Coordinator, Office of the Federal Register, National Archives and Records Service, General Services Administration, Washington, D.C. 20408.

***NOTE: As of January 1, 1979, the Merit Systems Protection Board (MSPB) and the Office of Personnel Management (OPM) will publish on the Tuesday/Friday schedule. (MSPB and OPM are successor agencies to the Civil Service Commission.)**

federal register

Area Code 202 Phone 523-5240

Published daily, Monday through Friday (no publication on Saturdays, Sundays, or on official Federal holidays), by the Office of the Federal Register, National Archives and Records Service, General Services Administration, Washington, D.C. 20408, under the Federal Register Act (49 Stat. 500, as amended; 44 U.S.C., Ch. 15) and the regulations of the Administrative Committee of the Federal Register (1 CFR Ch. I). Distribution is made only by the Superintendent of Documents, U.S. Government Printing Office, Washington, D.C. 20402.

The FEDERAL REGISTER provides a uniform system for making available to the public regulations and legal notices issued by Federal agencies. These include Presidential proclamations and Executive orders and Federal agency documents having general applicability and legal effect, documents required to be published by Act of Congress and other Federal agency documents of public interest. Documents are on file for public inspection in the Office of the Federal Register the day before they are published, unless earlier filing is requested by the issuing agency.

The FEDERAL REGISTER will be furnished by mail to subscribers, free of postage, for $5.00 per month or $50 per year, payable in advance. The charge for individual copies is 75 cents for each issue, or 75 cents for each group of pages as actually bound. Remit check or money order, made payable to the Superintendent of Documents, U.S. Government Printing Office, Washington, D.C. 20402.

There are no restrictions on the republication of material appearing in the FEDERAL REGISTER.

# INFORMATION AND ASSISTANCE

Questions and requests for specific information may be directed to the following numbers. General inquiries may be made by dialing **202-523-5240.**

**FEDERAL REGISTER,** Daily Issue:

| | |
|---|---|
| Subscription orders (GPO) | 202-783-3238 |
| Subscription problems (GPO) | 202-275-3054 |
| "Dial - a - Reg" (recorded summary of highlighted documents appearing in next day's issue). | |
| Washington, D.C. | 202-523-5022 |
| Chicago, Ill | 312-663-0884 |
| Los Angeles, Calif | 213-688-6694 |
| Scheduling of documents for publication. | 202-523-3187 |
| Photo copies of documents appearing in the Federal Register. | 523-5240 |
| Corrections | 523-5237 |
| Public Inspection Desk | 523-5215 |
| Finding Aids | 523-5227 |
| **Public Briefings: "How To Use the Federal Register."** | 523-5235 |
| **Code of Federal Regulations (CFR)** | 523-3419<br>523-3517 |
| Finding Aids | 523-5227 |

**PRESIDENTIAL PAPERS:**

| | |
|---|---|
| Executive Orders and Proclamations. | 523-5233 |
| Weekly Compilation of Presidential Documents. | 523-5235 |
| Public Papers of the Presidents | 523-5235 |
| Index | 523-5235 |

**PUBLIC LAWS:**

| | |
|---|---|
| Public Law numbers and dates | 523-5266<br>523-5282 |
| Slip Law orders (GPO) | 275-3030 |
| U.S. Statutes at Large | 523-5266<br>523-5282 |
| Index | 523-5266<br>523-5282 |
| **U.S. Government Manual** | 523-5230 |
| **Automation** | 523-3408 |
| **Special Projects** | 523-4534 |

## HIGHLIGHTS—Continued


**LABORATORIES THAT TEST THERMAL INSULATION MATERIALS**

Commerce/Sec'y announces criteria for and costs of accreditation; effective 2-20-79 (2 documents) (Part III of this issue) 3886

**OUTER CONTINENTAL SHELF**

Commerce/NOAA amends rules on consistency for exploration, development and production activities with approved State coastal management programs; effective 1-18-79 3705

**PRICE SUPPORTS ON 1978 CROPS**

USDA/CCC issues rules regarding loans and purchases on barley, wheat, oats, corn, rye, sorghum and soybeans; effective 1-18-79 (7 documents) 3670, 3673, 3680, 3685, 3691, 3692, 3697

**CIGARETTES**

FTC announces plans to initiate program for determination and publication of carbon monoxide content in smoke and considers technical improvements in method for determining nicotine content; comments by 2-20-79 3777

**PESTICIDES**

EPA proposes the establishment of a tolerance for residues of 6-benzyladenine on apples; comments by 2-20-79 3740

**TELEVISION BROADCAST SIGNALS**

FCC announces temporary policy concerning enforcement of horizontal and vertical blanking standards 3774

**TRUNKED RADIO SYSTEMS**

FCC proposes to adopt a new method for assigning radio frequencies in certain bands; comments by 2-7-79; reply comments by 2-22-79 3736

**FM QUADRAPHONIC BROADCASTING**

FCC issues further notice of inquiry to determine how option of reducing FM channel spacing would be affected by proposed standards and to evaluate proposed and alternative systems; comments by 4-16-79; reply comments by 5-16-79 3732

**PAYMENTS TO SHIPPERS AND INTERMEDIARIES**

CAB proposes policy statement that payments by direct carriers not be barred as rebates; comments by 3-20-79 3724

**IMPORTED COMMODITIES**

ITC solicits public views stemming from investigations into importation of certain swivel hooks, mounting brackets, and alternating pressure pads; comments by 2-7 and 2-20-79 (2 documents) 3789, 3790

**MEETINGS—**

Arms Control and Disarmament Agency: General Advisory Committee, 2-8 and 2-9-79 3746

Commerce/NOAA: Gulf of Mexico Fishery Management Council, Spiny Lobster Advisory Subpanel, 2-12 and 2-13-79 3746

EPA: Science Advisory Board's Executive Committee, 2-5 and 2-6-79 3770

HEW/ADAMHA: Advisory Committees, 2-1 through 2-3, 2-5 through 2-11, 2-13 through 2-17, 2-19 through 3-2-79 (4 documents) 3778-3780

CDC: National Institute for Occupational Safey and Health, 1-30-79 3784

National Institute of Education: Panel for the Review of Laboratory and Center Operations, 2-3 and 2-4-79 3784

Interior/BLM: Phoenix/Lower Gila Resource Areas Grazing Advisory Board, 3-8-79; Kingman Resource Area Grazing Advisory Board, 3-6-79 (2 documents) 3785, 3786

Justice: U.S. Circuit Judge Nominating Commission, Fourth Circuit Panel, 2-15 through 2-17-79, 2-26 through 2-28-79 ..... 3792
NRC: Advisory committee to study nuclear power plant construction during adjudication, 2-2-79 ..... 3794
DOT/CG: Ship Structure Subcommittee, 3-1-79 ..... 3806
Personal Flotation Devices, 2-1-79 ..... 3806
FAA: Radio Technical Commission for Aeronautics, Separation Study Review Group, 2-13 and 2-14-79 ..... 3807
FAA: Radio Technical Commission for Aeronautics, Special Committee 133, 2-6 through 2-8-79 ..... 3807

## AMENDED AND RESCHEDULED MEETING—

NFAH: Music Advisory Panel, Contemporary Ensembles Section, 1-25 through 1-28-79 ..... 3792

## CANCELLED MEETING—

USDA/Sec'y: Advisory Committee on Export Sales Reporting, 1-17-79 ..... 3746

## CHANGED MEETING—

EPA: Federal Insecticide, Fungicide, and Rodenticide Act Scientific Advisory Panel, 1-25 and 1-26-79 ..... 3770

## SEPARATE PARTS OF THIS ISSUE

Part II, CG ..... 3882
Part III, Commerce/Sec'y ..... 3886
Part IV, HUD ..... 3908
Part V, HUD ..... 3912
Part VI, DOE/ERA ..... 3928

# reminders

(The items in this list were editorially compiled as an aid to FEDERAL REGISTER users. Inclusion or exclusion from this list, has no legal significance. Since this list is intended as a reminder, it does not include effective dates that occur within 14 days of publication.)

## Rules Going Into Effect Today

CAB—Advertising disclosure of noncompliance with oversale rules; effective date postponed ..... 57243; 12-7-78
[Originally published at 43 FR 50164, 10-27-78]
EPA—Air quality implementation plans; various States:
California (3 documents) ..... 59063-59065; 12-19-78
Guam ..... 59066; 12-19-78
FTC—Rules of practice for adjudicative proceedings; discovery rules ... 56862; 12-4-78
HEW/FDA—Chloramphenical ophthalmic solution; deletion of chemical assay ..... 59057; 12-19-78

## List of Public Laws

NOTE: A complete listing of all public laws from the second session of the 95th Congress was published as Part II of the issue of December 4, 1978. (Price: 75 cents. Order by stock number 022-002-00960-4 from the Superintendent of Documents, Government Printing Office, Washington, D.C. 20402, Telephone 202-275-3030.)

The continuing listing will be resumed upon enactment of the first public law for the first session of the 96th Congress, which will convene on Monday, January 15, 1979.

# contents


AGRICULTURAL MARKETING SERVICE

Rules

Oranges (Navel) grown in Ariz. and Calif ..... 3369
Papayas grown in Hawaii ..... 3369

AGRICULTURE DEPARTMENT

*See also* Agricultural Marketing Service; Commodity Credit Corporation; Forest Service; Science and Education Administration.

Notices

Meetings:
Export Sales Reporting Advisory Committee ..... 3746

ALCOHOLIC, DRUG ABUSE, AND MENTAL HEALTH ADMINISTRATION

Notices

Meetings:
Advisory Committees; February (4 documents) ..... 3778-3780

ARMS CONTROL AND DISARMAMENT AGENCY

Notices

Meetings:
General Advisory Committee. 3746

ARTS AND HUMANITIES, NATIONAL FOUNDATION

Notices

Meetings:
Music Advisory Panel ..... 3792

CENTER FOR DISEASE CONTROL

*See* Disease Control Center.

CIVIL AERONAUTICS BOARD

Rules

Organization and functions:
Pricing and Domestic Aviation Bureau; correction ..... 3704

Proposed Rules

Policy statements:
Direct carriers, payment to shippers and intermediaries.. 3724

Notices

Hearings, etc..
Florida service case ..... 3746
Meetings; Sunshine Act (2 documents) ..... 3839

COAST GUARD

Proposed Rules

Safety zones, establishment:
Chesapeake Bay, Cove Point, Md ..... 3882

Notices

Flotation device research, personal ..... 3806
Meetings:
Ship Structure Committee ..... 3806

COMMERCE DEPARTMENT

*See also* National Oceanic and Atmospheric Administration; National Technical Information Service.

Notices

Laboratory Accreditation Program, National Voluntary:
Thermal insulation materials; testing laboratories accreditation; fees and charges ..... 3895
Thermal insulation materials; testing laboratories accreditation; criteria ..... 3886

COMMODITY CREDIT CORPORATION

Rules

Loan and purchase programs:
Barley ..... 3670
Corn ..... 3685
Oats ..... 3680
Rye ..... 3691
Sorghum ..... 3692
Soybean ..... 3697
Wheat ..... 3673

COMMODITY FUTURES TRADING COMMISSION

Rules

Commodity pool operators and trading advisors; written disclosure statements; correction ..... 3706

Notices

Meetings; Sunshine Act (5 documents) ..... 3839, 3840

DELAWARE RIVER BASIN COMMISSION

Notices

Comprehensive plan, water supply and sewage treatment plant projects; hearing ..... 3747

DISEASE CONTROL CENTER

Notices

Meetings:
Epidemiologic Study of Portsmouth Naval Shipyard ..... 3784

ECONOMIC REGULATORY ADMINISTRATION

Rules

Petroleum allocation and price rules and regulations:
Petroleum supply shortage; standby allocation and pricing ..... 3928

Proposed Rules

Powerplant and Industrial Fuel Use Act, implementation; hearings ..... 3721

Notices

Environmental statements; availability, etc..
Northern States Power Co. 500 kV International transmission line ..... 3748

EDUCATION OFFICE

Proposed Rules

Law-Related Education program; draft availability ..... 3732

ENERGY DEPARTMENT

*See* Economic Regulatory Administration; Federal Energy Regulatory Commission; Hearings and Appeals Office, Energy Department.

ENVIRONMENTAL PROTECTION AGENCY

Proposed Rules

Air pollution control; recommendation for alternative emission reduction options within State implementation plans ..... 3740
Air quality implementation plans; approval and promulgation; various States, etc..
Texas ..... 3739
Pesticide chemicals in or on raw agricultural commodities, tolerances and exemptions, etc..
6-Benzyladenine ..... 3740

Notices

Meetings:
FIFRA Scientific Advisory Panel; agenda change ..... 3770
Science Advisory Board ..... 3772
Pesticide, tolerances in animal feeds and human food:
Monsanto Agricultural Products Co ..... 3771
Rohm & Haas Co ..... 3771
3M Co. et al ..... 3771
Pesticide programs:
Triforine ..... 3772
Pesticide registration, cancellation, etc..
Mefluidide ..... 3773
Sodium salt of acifluorfen, etc ..... 3774
Pesticides, emergency exemption applications:
Benomyl ..... 3772
Water pollution control:
Safe drinking water; review of variances and exemptions, Mich., Minn., and Wisc ..... 3772

FEDERAL AVIATION ADMINISTRATION

Rules

Airworthiness directives:
Agusta ..... 3701
Hawker Siddeley ..... 3701
Piper ..... 3703
Transition area ..... 3704

Proposed Rules

Control zone ..... 3723

Notices

Meetings:
Aeronautics Radio Technical Commission (2 documents) 3807

FEDERAL BUREAU OF INVESTIGATION

Notices

Committees; establishment, renewals, terminations, etc.:
National Crime Information Center Advisory Policy Board ..... 3792

FEDERAL COMMUNICATIONS COMMISSION

Rules

Radio stations, table of assignments:
Michigan ..... 3707

Proposed Rules

Radio broadcasting:
FM quadraphonic broadcasting; inquiry ..... 3732
Radio services, special:
Trunked radio system, frequency assignment in 806-821 MHz and 851-866 MHz bands ..... 3736

Notices

Meetings; Sunshine Act ..... 3840
Television broadcast signals, technical standards; FCC policy ..... 3774

FEDERAL ENERGY REGULATORY COMMISSION

Proposed Rules

Natural gas curtailment ..... 3725

Notices

Hearings, etc..
Northern Natural Gas Co ..... 3749

FEDERAL HOME LOAN BANK BOARD

Notices

Savings and loan holding company regulatory program; impending closure of record ..... 3775

FEDERAL MARITIME COMMISSION

Notices

Freight forwarder licenses:
Mateus Shipping Corp. et al., correction ..... 3775
Meetings; Sunshine Act ..... 3840

FEDERAL MINE SAFETY AND HEALTH REVIEW COMMISSION

Notices

Meetings; Sunshine Act ..... 3840

FEDERAL RAILROAD ADMINISTRATION

Notices

Petitions for exemptions, etc.:
Great Southwest Railroad Co ..... 3807

FEDERAL RESERVE SYSTEM

Notices

Applications, etc..
Citicorp et al ..... 3775
St. Clair Bancorporation ..... 3776
United Oklahoma Bankshares, Inc ..... 3776

FEDERAL TRADE COMMISSION

Notices

Cigarette testing results; carbon monoxide, tar and nicotine content; inquiry ..... 3777

FOREST SERVICE

Notices

Environmental statements; availability, etc.:
Deschutes National Forest, Forest Plan, Oreg ..... 3745
Gifford Pinchot National Forest, Dry Creek I Precommercial Thinning Project, Wash ..... 3745
Olympic National Forest, Olympic Forest Plan, Wash ..... 3745

GENERAL ACCOUNTING OFFICE

Notices

Regulatory reports review; proposals, approvals, etc. (NRC).. 3777

HEALTH, EDUCATION, AND WELFARE DEPARTMENT

*See* Alcohol, Drug Abuse, and Mental Health Administration; Disease Control Center; Education Office; National Institute of Education.

HEARINGS AND APPEALS OFFICE, ENERGY DEPARTMENT

Notices

Applications for exception:
Decisions and orders (7 documents) ..... 3752, 3753, 3757, 3762, 3765, 3768

HOUSING AND URBAN DEVELOPMENT DEPARTMENT

Rules

Low-income housing:
Fair market rents and contract rent automatic annual adjustment factors (2 documents) ..... 3908, 3912

INTERIOR DEPARTMENT

*See also* Land Management Bureau.

Notices

Environmental statements; availability, etc..
Grand Canyon National Park, feral burro management and ecosystem restoration plan, Ariz ..... 3789

INTERNATIONAL TRADE COMMISSION

Notices

Import investigations:
Alternating pressure pads ..... 3790
Swivel hooks and mounting brackets ..... 3789

INTERSTATE COMMERCE COMMISSION

Rules

Railroad car service orders:
Freight cars; distribution ..... 3714
Hopper cars, return ..... 3716
Hopper cars, covered; distribution ..... 3718
Railroad car service orders; various companies:
Atchison, Topeka & Santa Fe Railway Co ..... 3713
Atlanta & West Point Railroad Co. et al ..... 3717
Brillion & Forest Junction Railroad Co ..... 3711
Chesapeake & Ohio Railway Co ..... 3716
Chicago, Milwaukee, St. Paul & Pacific Railroad Co ..... 3712
Chicago & Northwestern Transportation Co. (2 documents) ..... 3715
Erie Western Railway Co ..... 3716
Illinois Terminal Railroad Co ..... 3717
Indiana Interstate Railway Co., Inc ..... 3713
Missouri-Kansas-Texas Railroad Co ..... 3713
South Central Tennessee Railroad Co ..... 3712

Proposed Rules

Freedom of information, business information disclosure and policy statement on confidentiality of financial data; consolidation of proceedings .. 3739

Notices

Hearing assignments; correction ..... 3830
Motor carriers:
Permanent authority applications ..... 3810
Permanent authority applications; correction ..... 3830
Temporary authority applications ..... 3824
Temporary authority applications; correction (3 documents) ..... 3830
Transfer proceedings ..... 3831
Petitions, applications, finance matters (including temporary authorities), railroad abandonments, alternate route deviations, and intrastate applications ..... 3832
Petitions filing:
Pinto Trucking Service; Inc., airport service; extension of time ..... 3830
Railroad car service orders; various companies:
Southern Pacific Transportation Co ..... 3838
Rerouting of traffic:
Michigan Northern Railway Co. et al ..... 3830

JUSTICE DEPARTMENT

*See also* Federal Bureau of Investigations; Law Enforcement Assistance Administration.

Notices

Meetings:
Circuit Judge Nominating Commission, U.S ..... 3792

LAND MANAGEMENT BUREAU

Rules

Public land orders:
California ..... 3706

Notices

Applications, etc..
Nevada ..... 3786
New Mexico (8 documents) ..... 3785, 3787, 3788

Coal management:
Decker-Birney, South Rosebud and Coalwood Management Framework Plans ..... 3786

Meetings:
Kingman Resource Area Grazing Advisory Board ..... 3785
Phoenix/Lower Gila Resource Areas Grazing Advisory Board ..... 3786

Motor vehicles, off-road, etc., area closures:
Oregon ..... 3786

Survey plat filings:
Arizona ..... 3786

Wilderness area inventories:
New Mexico (2 documents) ..... 3785

Withdrawal and reservation of lands, proposed, etc..
Oregon ..... 3788

LAW ENFORCEMENT ASSISTANCE ADMINISTRATION

Notices

Grants solicitation, competitive research:
Arson and anti-arson; correction ..... 3792

MANAGEMENT AND BUDGET OFFICE

Notices

Implementation of Section 223(a)(3) of Pub. L. 95-507; invitation for public comment ... 3796

MATERIALS TRANSPORATION BUREAU

Rules

Cylinders, compressed gas; visual inspection procedures, record retention, etc ..... 3707

Notices

Applications; exemptions, renewals, etc. (2 documents) ..... 3807, 3809

NATIONAL CREDIT UNION ADMINISTRATION

Proposed Rules

Federal credit unions:
Nondiscrimination in lending ..... 3722

NATIONAL HIGHWAY TRAFFIC SAFETY ADMINISTRATION

Rules

Fuel economy standards, average; passenger automobile; exemption:
Excalibur Automobile Corp .... 3708
Rolls-Royce Motors Inc ..... 3710

Proposed Rules

Fuel economy standards, average; passenger automobiles; exemption:
Officine Alfieri Maserati S.p.A 3737

NATIONAL INSTITUTE OF EDUCATION

Notices

Meetings:
Laboratory and Center Operations Review Panel ..... 3784

NATIONAL MEDIATION BOARD

Notices

Meetings; Sunshine Act ..... 3840

NATIONAL OCEANIC AND ATMOSPHERIC ADMINISTRATION

Rules

Coastal zone management programs:
Consistency for OCS exploration, development and production activities ..... 3705

Notices

Marine mammal permit applications, etc..
Sovrybflot, Moscow, U.S.S.R.. 3746

Meetings:
Gulf of Mexico Fishery Management Council ..... 3746

NATIONAL TECHNICAL INFORMATION SERVICE

Notices

Inventions, Government-owned; availability for licensing ..... 3747

NATIONAL TRANSPORTATION SAFETY BOARD

Notices

Meetings; Sunshine Act ..... 3840

Safety recommendations and accident reports; availability, responses, etc ..... 3795

NUCLEAR REGULATORY COMMISSION

Proposed Rules

Production and utilization facilities, domestic licensing:
Codes and standards for power plants; inservice inspection methods ..... 3719

Notices

Applications, etc..
Commonwealth Edison Co ..... 3793
Florida Power Corp. et al ..... 3793

Low-level ionizing radiation; memorandum of understanding with EPA ..... 3793

Meetings:
Nuclear power plant construction during adjudication study ..... 3794

POSTAL SERVICE

Notices

Mail classification schedule:
Third class carrier route presort; temporary change ..... 3797

SCIENCE AND EDUCATION ADMINISTRATION

Proposed Rules

Poultry improvement plan; extension of time ..... 3719

SECURITIES AND EXCHANGE COMMISSION

Notices

Hearings, etc..
Eastern Utilities Associates .... 3804
Cahill Gordon & Reindel Retirement Plan ..... 3803
Indiana-Kentucky Electric Corp. et al ..... 3799
Louisiana Power & Light Co .. 3805
Members' Investment for Growth Fund, Ltd ..... 3802

Self-regulatory organizations; proposed rule change:
American Stock Exchange, Inc ..... 3797
Chicago Board Options Exchange, Inc ..... 3799
Midwest Stock Exchange, Inc., correction ..... 3806
Options Clearing Corp ..... 3802

TRANSPORTATION DEPARTMENT

*See* Coast Guard; Federal Aviation Administration; Federal Railroad Administration; Materials Transportation Bureau; National Highway Traffic Safety Administration.

# list of cfr parts affected in this issue

The following numerical guide is a list of the parts of each title of the Code of Federal Regulations affected by documents published in today's issue. A cumulative list of parts affected, covering the current month to date, follows beginning with the second issue of the month.

A Cumulative List of CFR Sections Affected is published separately at the end of each month. The guide lists the parts and sections affected by documents published since the revision date of each title.


**7 CFR**

907 ..... 3669
928 ..... 3669
1421 (7 documents) ..... 3670, 3673, 3680, 3685, 3691, 3692, 3697

**9 CFR**

PROPOSED RULES:
445 ..... 3719
447 ..... 3719

**10 CFR**

210 ..... 3936
211 ..... 3936
212 ..... 3942

PROPOSED RULES:
50 ..... 3719
500 ..... 3721
501 ..... 3721
502 ..... 3721
503 ..... 3721
505 ..... 3721

**12 CFR**

PROPOSED RULES:
701 ..... 3722

**14 CFR**

39 (3 documents) ..... 3701, 3703
71 ..... 3704
385 ..... 3704

PROPOSED RULES:
71li 3723
399 ..... 3723

**15 CFR**

930 ..... 3705

**17 CFR**

1 ..... 3706
4 ..... 3706

**18 CFR**

PROPOSED RULES:
281 ..... 3725

**24 CFR**

888 (2 documents) ..... 3908, 3912

**33 CFR**

PROPOSED RULES:
165 ..... 3882

**40 CFR**

PROPOSED RULES:
52 (2 documents) ..... 3739, 3740
180 ..... 3740

**43 CFR**

PUBLIC LAND ORDERS:
5656 ..... 3706

**45 CFR**

PROPOSED RULES:
Ch. I ..... 3732

**47 CFR**

73 ..... 3707

PROPOSED RULES:
73 ..... 3732
90 ..... 3736

**49 CFR**

171 ..... 3707
173 ..... 3707
531 (2 documents) ..... 3708, 3710
1033 (15 documents) ..... 3711-3718

PROPOSED RULES:
531 ..... 3737
1001 ..... 3739

# CUMULATIVE LIST OF CFR PARTS AFFECTED DURING JANUARY

**The following numerical guide is a list of parts of each title of the Code of Federal Regulations affected by documents published to date during January.**


**1 CFR**

Ch. I ..... 5
305 ..... 1357

**3 CFR**

MEMORANDUMS:

December 30, 1978 ..... 1075
January 4, 1979 ..... 1933

PROCLAMATIONS:

4547 (See Proc. 4631) ..... 1
4631 ..... 1
4632 ..... 1697
4633 ..... 2563

EXECUTIVE ORDERS:

November 12, 1838 (Revoked in part by PLO 5655) ..... 1980
8743 (Amended by EO 12107) ..... 1055
8744 (Amended by EO 12107) ..... 1055
9230 (Amended by EO 12107) ..... 1055
9384 (Revoked by EO 12113) ..... 1953
9712 (Amended by EO 12107) ..... 1055
9830 (Amended by EO 12107) ..... 1055
9932 (Amended by EO 12107) ..... 1055
9961 (Amended by EO 12107) ..... 1055
10000 (Amended by EO 12107) ..... 1055
10242 (Amended by EO 12107) ..... 1055
10422 (Amended by EO 12107) ..... 1055
10450 (Amended by EO 12107) ..... 1055
10459 (Amended by EO 12107) ..... 1055
10530 (Amended by EO 12107) ..... 1055
10540 (Amended by EO 12107) ..... 1055
10549 (Revoked by EO 12107) ..... 1055
10550 (Amended by EO 12107) ..... 1055
10552 (Amended by EO 12107) ..... 1055
10556 (Amended by EO 12107) ..... 1055
10561 (Revoked by EO 12107) ..... 1055
10577 (Amended by EO 12107) ..... 1055
10641 (Amended by EO 12107) ..... 1055
10647 (Amended by EO 12107) ..... 1055
10717 (Amended by EO 12107) ..... 1055
10763 (Amended by EO 12107) ..... 1055
10774 (Amended by EO 12107) ..... 1055
10804 (Amended by EO 12107) ..... 1055
10826 (Amended by EO 12107) ..... 1055
10880 (Amended by EO 12107) ..... 1055
10903 (Amended by EO 12107) ..... 1055
10927 (Amended by EO 12107) ..... 1055
10973 (Amended by EO 12107) ..... 1055
10982 (Amended by EO 12107) ..... 1055
11022 (Amended by EO 12106) ..... 1053
11103 (Amended by EO 12107) ..... 1055
11171 (Amended by EO 12107) ..... 1055
11183 (Amended by EO 12107) ..... 1055
11203 (Amended by EO 12107) ..... 1055
11219 (Amended by EO 12107) ..... 1055
11222 (Amended by EO 12107) ..... 1055
11228 (Amended by EO 12107) ..... 1055
11264 (Amended by EO 12107) ..... 1055
11315 (Amended by EO 12107) ..... 1055
11348 (Amended by EO 12107) ..... 1055
11355 (Amended by EO 12107) ..... 1055
11422 (Amended by EO 12107) ..... 1055
11434 (Amended by EO 12107) ..... 1055
11438 (Amended by EO 12107) ..... 1055
11451 (Amended by EO 12107) ..... 1055

**3 CFR—Continued**

11478 (Amended by EO 12106) ..... 1053
11480 (Amended by EO 12106) ..... 1053
11482 (Revoked by EO 12110) ..... 1069
11490 (Amended by EO 12107) ..... 1055
11491 (Amended by EO 12107) ..... 1055
11512 (Amended by EO 12107) ..... 1055
11521 (Amended by EO 12107) ..... 1055
11534 (Revoked by EO 12110) ..... 1069
11552 (Amended by EO 12107) ..... 1055
11561 (Amended by EO 12107) ..... 1055
11570 (Amended by EO 12107) ..... 1055
11579 (Amended by EO 12107) ..... 1055
11589 (Amended by EO 12107) ..... 1055
11603 (Amended by EO 12107) ..... 1055
11609 (Amended by EO 12107) ..... 1055
11636 (Amended by EO 12107) ..... 1055
11639 (Amended by EO 12107) ..... 1055
11648 (Amended by EO 12107) ..... 1055
11721 (Amended by EO 12107) ..... 1055
11744 (Amended by EO 12107) ..... 1055
11787 (Amended by EO 12107) ..... 1055
11817 (Amended by EO 12107) ..... 1055
11830 (Amended by EO 12106) ..... 1055
11849 (Revoked by EO 12110) ..... 1069
11890 (Amended by EO 12107) ..... 1055
11895 (Amended by EO 12107) ..... 1055
11899 (Amended by EO 12107) ..... 1055
11935 (Amended by EO 12107) ..... 1055
11938 (Amended by EO 12107) ..... 1055
11948 (Superseded by EO 12110) 1069
11955 (Amended by EO 12107) ..... 1055
11971 (Revoked by EO 12110) ..... 1069
11973 (Revoked by EO 12110) ..... 1069
11998 (Revoked by EO 12110) ..... 1069
12004 (Amended by EO 12107) ..... 1055
12008 (Amended by EO 12107) ..... 1055
12014 (Amended by EO 12107) ..... 1055
12015 (Amended by EO 12107) ..... 1055
12027 (Amended by EO 12107) ..... 1055
12043 (Amended by EO 12107) ..... 1055
12049 (Amended by EO 12107) ..... 1055
12067 (Amended by EO 12107) ..... 1055
12070 (Amended by EO 12107) ..... 1055
12076 (Amended by EO 12111) ..... 1071
12089 (Amended by EO 12107) ..... 1055
12105 (Amended by EO 12107) ..... 1055
12106 ..... 1053
12107 ..... 1055
12108 ..... 1065
12109 ..... 1067
12110 ..... 1069
12111 ..... 1071
12112 ..... 1073
12113 ..... 1955
12114 ..... 1957

**5 CFR**

Ch. I ..... 3440
210 ..... 3440
213 ..... 1359-1362, 1963, 2565
308 ..... 3446
315 ..... 3441
430 ..... 3447
432 ..... 3442
550 ..... 2565
752 ..... 3444
2400 ..... 5

**6 CFR**

705 ..... 1077
706 ..... 1346, 1963

**7 CFR**

2 ..... 2565
15 ..... 1362
210 ..... 1362
225 ..... 8
245 ..... 1363
354 ..... 1364
401 ..... 29, 749
402 ..... 1963
403 ..... 1964
404 ..... 1964
406 ..... 1965
408 ..... 1965
409 ..... 1966
410 ..... 1967
411 ..... 1967
412 ..... 1365
413 ..... 1968
414 ..... 1968
417 ..... 1969
722 ..... 2567
795 ..... 2567
907 ..... 1077, 2353, 3669
910 ..... 30, 1366, 2567
928 ..... 30, 3669
971 ..... 2165
1421 ..... 2353, 3454, 3456, 3459, 3461, 3463, 3465, 3670, 3673, 3680, 3685, 3691, 3692, 3697
1427 ..... 3466
1701 ..... 1366
1804 ..... 1701
1809 ..... 1701
1822 ..... 1701
1861 ..... 1702
1872 ..... 1702
1904 ..... 1701
1945 ..... 1702
1980 ..... 1720
2024 ..... 1721
2880 ..... 3253

PROPOSED RULES:

Ch. IX ..... 1750
210 ..... 1379
246 ..... 2114
989 ..... 47
1062 ..... 1741
1421 ..... 1116, 1380
1446 ..... 1380
1701 ..... 1381

**9 CFR**

11 ..... 1558
73 ..... 1368
79 ..... 1368
94 ..... 2568

PROPOSED RULES:

91 ..... 2600
92 ..... 1552
445 ..... 3719
447 ..... 3719

**10 CFR**

20 ... 2569
21 ... 2569
35 ... 1722
73 ... 2569
205 ... 3021
210 ... 3936
211 ... 3418, 3467, 3936
212 ... 3256, 3942
430 ... 1970
440 ... 31
515 ... 761
1004 ... 1908

PROPOSED RULES:

Ch. I ... 2158
50 ... 3719
140 ... 1751
211 ... 892
212 ... 892, 1888
213 ... 1896
430 ... 49, 2399
455 ... 1580
500 ... 3721
501 ... 3721
502 ... 3721
503 ... 3721
505 ... 3721
508 ... 1694
790 ... 1568

**12 CFR**

1 ... 762
226 ... 767, 3257
265 ... 1725
304 ... 3258
545 ... 3470

PROPOSED RULES:

215 ... 893
226 ... 1116
505 ... 2178
701 ... 60, 63, 895, 3722

**13 CFR**

121 ... 34, 1725
130 ... 1369

**14 CFR**

21 ... 2362
27 ... 2362
29 ... 2362
36 ... 3031
39 ... 36, 37, 1078-1082, 1726, 2363, 2367, 2377, 3032, 3701, 3703
47 ... 38, 1726
71 ... 39, 40, 300, 1085-1087, 1726, 3032, 3704
73 ... 1088
75 ... 40, 300
91 ... 2362
97 ... 41, 2378
241 ... 1970, 3471
250 ... 2165
385 ... 3704
1216 ... 1089

PROPOSED RULES:

1 ... 1322
27 ... 3250
29 ... 3250

**14 CFR—Continued**

PROPOSED RULES—Continued

39 ... 1120, 1741, 2399
43 ... 3250
47 ... 63
61 ... 3250
71 ... 68, 1120-1122, 1322, 3723
73 ... 68
91 ... 1322, 3250
105 ... 1322
121 ... 3250
127 ... 3250
133 ... 3250
135 ... 3250
208 ... 2179
221 ... 1381
239 ... 896
288 ... 2179
302 ... 1381
399 ... 1381, 2179, 3723

**15 CFR**

30 ... 1971
371 ... 43, 1093
373 ... 1095, 1971
374 ... 44
376 ... 1099
377 ... 44, 1973
930 ... 3705

PROPOSED RULES:

Subtitle A ... 896
931 ... 3230

**16 CFR**

13 ... 3033, 3259
456 ... 2569
600 ... 3259
1302 ... 792
1303 ... 792
1630 ... 2168

PROPOSED RULES:

1 ... 1753
13 ... 899, 2182, 2600
419 ... 69
450 ... 1123
455 ... 914
461 ... 2602, 3495
1608 ... 1981
1610 ... 1981
1611 ... 1981

**17 CFR**

1 ... 1918, 3706
4 ... 1918, 3706
200 ... 3473
240 ... 1727, 1973, 1974, 2144, 3033
249 ... 3033

PROPOSED RULES:

240 ... 1754, 1981
270 ... 3376

**18 CFR**

1 ... 2380
154 ... 1100
286 ... 2381

PROPOSED RULES:

281 ... 3052, 3725
708 ... 2956

**19 CFR**

159 ... 1372, 1728, 2570, 3473-3478

**20 CFR**

651 ... 1688
654 ... 1688

**21 CFR**

14 ... 1975, 2571
81 ... 45
436 ... 1374
455 ... 1374
520 ... 1375
546 ... 1976
601 ... 1544
610 ... 1544
1308 ... 2169

PROPOSED RULES:

20 ... 2932
145 ... 1983
175 ... 69
510 ... 1983
522 ... 1381, 3306
556 ... 1381

**22 CFR**

42 ... 1730

PROPOSED RULES:

211 ... 1123

**23 CFR**

637 ... 2170

PROPOSED RULES:

420 ... 2400
635 ... 69

**24 CFR**

10 ... 1606
200 ... 2383, 2384, 3035
203 ... 1336
300 ... 3035, 3036
886 ... 1731
888 ... 2571, 3908, 3912
891 ... 3036
1914 ... 792, 2572, 2574
1915 ... 794, 801, 815
1917 ... 841-870, 1976, 1977, 2184, 2185, 3037-3047, 3261-3273, 3479-3490

PROPOSED RULES:

805 ... 2502
865 ... 1600
1917 ... 1134-1177, 1382-1411, 1985, 3496-3512

**25 CFR**

251 ... 46

**26 CFR**

1 ... 870, 1102, 1104, 1376
5 ... 871, 1106
31 ... 1109
37 ... 1110
54 ... 1978
141 ... 1978

PROPOSED RULES:

1 ... 1178, 1180, 1412, 1985, 2602
7 ... 1985
31 ... 1181

27 CFR

PROPOSED RULES:

4 ..... 2603
5 ..... 2603
7 ..... 2603

28 CFR

0 ..... 3273
2 ..... 3404, 3405, 3407, 3408

PROPOSED RULES:

2 ..... 3306
511 ..... 2978
512 ..... 2978
513 ..... 2978
522 ..... 2978
524 ..... 2978
527 ..... 2978
540 ..... 2978
543 ..... 2978
544 ..... 2978
545 ..... 2978
546 ..... 2978
549 ..... 2978
550 ..... 2978
551 ..... 2978
552 ..... 2978
570 ..... 2978
571 ..... 2978
572 ..... 2978

29 CFR

2701 ..... 2575

PROPOSED RULES:

1202 ..... 1181
1206 ..... 1181
1601 ..... 3513
1910 ..... 2604
2200 ..... 1762
2201 ..... 1762

30 CFR

48 ..... 1979

PROPOSED RULES:

Ch. VII ..... 1355, 1989
49 ..... 1536
55 ..... 2604
56 ..... 2604
57 ..... 2604
250 ..... 3513
252 ..... 3524

31 CFR

316 ..... 3372
332 ..... 3364

PROPOSED RULES:

1 ..... 1414

32 CFR

166 ..... 3049
644 ..... 3168
2103 ..... 2384

33 CFR

117 ..... 1112, 2386

PROPOSED RULES:

110 ..... 2606
161 ..... 2401
165 ..... 3882

35 CFR

253 ..... 1731

36 CFR

1 ..... 3491
7 ..... 3491
21 ..... 2577

PROPOSED RULES:

219 ..... 2606
222 ..... 914
231 ..... 914

38 CFR

PROPOSED RULES:

21 ..... 1181

39 CFR

111 ..... 3050
224 ..... 2386

PROPOSED RULES:

111 ..... 3056
310 ..... 915, 1762
320 ..... 915, 1762
3001 ..... 2606

40 CFR

51 ..... 3274
60 ..... 2578, 3491
65 ..... 1377, 1731, 1732, 2387, 2388, 2579-2585, 3285-3287
86 ..... 2960
434 ..... 2586
1500 ..... 873
1501 ..... 873
1504 ..... 873
1506 ..... 874
1508 ..... 874

PROPOSED RULES:

51 ..... 2608
52 ..... 1189, 1989, 1990, 2614, 3739, 3740
65 ..... 1193-1199, 1415, 1416, 1762, 1764, 2402, 2615, 3057, 3527, 3528
81 ..... 2617
162 ..... 1991
180 ..... 1764, 3529, 3740
720 ..... 2242

41 CFR

Ch. 1 ..... 2388
Ch. 101 ..... 1378
9-1 ..... 2556
101-38 ..... 874
109-1 ..... 986
109-14 ..... 995
109-25 ..... 995
109-26 ..... 997
109-27 ..... 997
109-28 ..... 997
109-29 ..... 1002
109-30 ..... 1002
109-36 ..... 1002
109-38 ..... 1003
109-39 ..... 1016
109-42 ..... 1017
109-43 ..... 1018

41 CFR—Continued

109-44 ..... 1021
109-45 ..... 1022
109-46 ..... 1026
109-48 ..... 1026
109-50 ..... 1026
109-51 ..... 1029

PROPOSED RULES:

101-47 ..... 70, 3058

42 CFR

405 ..... 2592, 2593, 3288
460 ..... 2594

PROPOSED RULES:

405 ..... 2618
476 ..... 3058

43 CFR

PROPOSED RULES:

2740 ..... 2620
2910 ..... 2620
3800 ..... 2623

PUBLIC LAND ORDERS:

2720 ..... 1340
4100 ..... 2172
5655 ..... 1980
5656 ..... 3706

45 CFR

2012 ..... 2099

PROPOSED RULES:

Ch. I ..... 3732
116 ..... 3530
116a ..... 3530
116d ..... 3530
122a ..... 2403
158 ..... 3530
161b ..... 2403
161c ..... 2404
161e ..... 2404
161n ..... 2404
162 ..... 1994
183 ..... 2404
205 ..... 2404
206 ..... 2404
1067 ..... 1200

46 CFR

34 ..... 2391
76 ..... 2392
95 ..... 2392
162 ..... 2393
167 ..... 2394
193 ..... 2394
530 ..... 2595

PROPOSED RULES:

510 ..... 1418
531 ..... 1418
544 ..... 915

47 CFR

1 ..... 3290
13 ..... 1733
73 ..... 1733, 1737, 1738, 3412, 3707
81 ..... 3290
83 ..... 3290

47 CFR—Continued

PROPOSED RULES:

1 ..... 3307
15 ..... 924, 3656, 3660, 3661, 3663
63 ..... 1764
64 ..... 1764
73 ..... 1765, 3732
90 ..... 3736

48 CFR

PROPOSED RULES:

2 ..... 70
8 ..... 70
17 ..... 70

49 CFR

1 ..... 2395
171 ..... 3707
173 ..... 3707
178 ..... 1739
218 ..... 2174
531 ..... 3708, 3710
1033 ..... 874-879, 1739, 3711-3718
1041 ..... 3295

49 CFR—Continued

1047 ..... 3295
1056 ..... 879, 2595
1082 ..... 3295
1111 ..... 883, 2177
1201 ..... 3493
1249 ..... 1740
1253 ..... 2396

PROPOSED RULES:

Ch. II ..... 925
Ch. X ..... 1994, 3531
29 ..... 1765
127 ..... 1856
171 ..... 1879
172 ..... 1767, 1852
173 ..... 1767, 1852
174 ..... 1883
175 ..... 1883
176 ..... 1883
177 ..... 1886
178 ..... 1767
215 ..... 1419
531 ..... 3737
1001 ..... 3739

49 CFR—Continued

PROPOSED RULES—Continued

1100 ..... 2407
1201 ..... 1995
1207 ..... 2407
1240 ..... 2407

50 CFR

Ch. II ..... 1113
17 ..... 3636
18 ..... 2540, 2597
20 ..... 2597
32 ..... 2396
216 ..... 2547
260 ..... 3296
611 ..... 1115
651 ..... 885, 2397
671 ..... 1115

PROPOSED RULES:

20 ..... 2629
23 ..... 3384, 3385
26 ..... 1433
285 ..... 1201
662 ..... 1434

## FEDERAL REGISTER PAGES AND DATES—JANUARY

| *Pages* | *Date* |
|---|---|
| 1-748 | Jan. 2 |
| 749-1070 | 3 |
| 1071-1355 | 4 |
| 1357-1696 | 5 |
| 1697-1954 | 8 |
| 1955-2163 | 9 |
| 2165-2351 | 10 |
| 2353-2562 | 11 |
| 2563-3019 | 12 |
| 3021-3252 | 15 |
| 3253-3449 | 16 |
| 3451-3668 | 17 |
| 3669-3942 | 18 |

# rules and regulations

This section of the FEDERAL REGISTER contains regulatory documents having general applicability and legal effect most of which are keyed to and codified in the Code of Federal Regulations, which is published under 50 titles pursuant to 44 U.S.C. 1510.

The Code of Federal Regulations is sold by the Superintendent of Documents. Prices of new books are listed in the first FEDERAL REGISTER issue of each month.

[3410-02-M]

## Title 7—Agriculture

## CHAPTER IX—AGRICULTURAL MARKETING SERVICE (MARKETING AGREEMENTS AND ORDERS; FRUITS, VEGETABLES, NUTS), DEPARTMENT OF AGRICULTURE

[Navel Orange Reg. 449; Navel Orange Reg. 448, Amdt. 1]

## PART 907—NAVEL ORANGES GROWN IN ARIZONA AND DESIGNATED PART OF CALIFORNIA

### Limitation of Handling

AGENCY: Agricultural Marketing Service, USDA.

ACTION: Final rule.

SUMMARY: This action establishes the quantity of fresh California-Arizona navel oranges that may be shipped to market during the period January 19-25, 1979, and increases the quantity of such oranges that may be so shipped during the period January 12-18, 1979. Such action is needed to provide for orderly marketing of fresh navel oranges for the periods specified due to the marketing situation confronting the orange industry.

DATES: The regulation becomes effective January 19, 1979, and the amendment is effective for the period January 12-18, 1979.

FOR FURTHER INFORMATION CONTACT:

Charles R. Brader, (202) 447-6393.

SUPPLEMENTARY INFORMATION: *Findings.* Pursuant to the marketing agreement, as amended, and Order No. 907, as amended (7 CFR Part 907), regulating the handling of navel oranges grown in Arizona and designated part of California, effective under the Agricultural Marketing Agreement Act of 1937, as amended (7 U.S.C. 601-674), and upon the basis of the recommendations and information submitted by the Navel Orange Administrative Committee, established under this marketing order, and upon other information, it is found that the limitation of handling of navel oranges, as hereafter provided, will tend to effectuate the declared policy of the act by tending to establish and maintain such orderly marketing conditions for such oranges as will provide, in the interests of producers and consumers, an orderly flow of the supply thereof to market throughout the normal marketing season to avoid unreasonable fluctuations in supplies and prices, and is not for the purpose of maintaining prices to farmers above the level which it is declared to be the policy of Congress to establish under the act. This regulation has not been determined significant under the USDA criteria for implementing Executive Order 12044.

The committee met on January 12, 15, and 16, 1979, to consider supply and market conditions and other factors affecting the need for regulation, and recommended quantities of navel oranges deemed advisable to be handled during the specified weeks. The committee reports the demand for navel oranges is expected to continue active.

It is further found that it is impracticable and contrary to the public interest to give preliminary notice, engage in public rulemaking, and postpone the effective date until 30 days after publication in the FEDERAL REGISTER (5 U.S.C. 553), because of insufficient time between the date when information became available upon which this regulation and amendment are based and the effective date necessary to effectuate the declared policy of the act. Interested persons were given an opportunity to submit information and views on the regulation at an open meeting, and the amendment relieves restrictions on the handling of navel oranges. It is necessary to effectuate the declared purposes of the act to make these regulatory provisions effective as specified, and handlers have been apprised of such provisions and the effective time.

1. Navel Orange Regulation 449 is set forth below:

§ 907.749 Navel Orange Regulation 449.

*Order.* (a) The quantities of navel oranges grown in Arizona and California which may be handled during the period January 19, 1979, through Janaury 25, 1979, are established as follows:

(1) District 1: 650,000 cartons;
(2) District 2: 89,754 cartons;
(3) District 3: unlimited movement.

(b) As used in this section, "handled", "District 1", "District 2", "District 3", and "carton", mean the same as defined in the marketing order.

2. Paragraph (a) (1) and (2) in § 907.748 Navel Orange Regulation 448 (44 FR 2353), is hereby amended to read:

§ 907.748 Navel Orange Regulation 448.

(a) * * *
(1) District 1: 765,000 cartons;
(2) District 2: 135,000 cartons.

* * * * *

(Secs. 1-19, 48 Stat. 31, as amended; 7 U.S.C. 601-674)

Dated: January 17, 1979.

CHARLES R. BRADER,
*Acting Director, Fruit and Vegetable Division, Agricultural Marketing Service.*

[FR Doc. 79-2117 Filed 1-17-79; 11:34 am]

---

[3410-02-M]

[Papaya Regulation 9, Amendment 1]

## PART 928—PAPAYAS GROWN IN HAWAII

### Limitation of Handling

AGENCY: Agricultural Marketing Service, USDA.

ACTION: Amendment to final rule.

SUMMARY: This amendment relaxes the quality requirement applicable to export shipments of Hawaiian papayas during the period January 15 through April 30, 1979. Such action recognizes the current and prospective marketing situation for Hawaiian papayas and is consistent with the composition of the crop.

EFFECTIVE DATE: January 15, 1979.

FOR FURTHER INFORMATION CONTACT:

Charles R. Brader, 202-447-6393.

SUPPLEMENTARY INFORMATION: Pursuant to the marketing agreement and Order No. 928 (7 CFR Part 928) regulating the handling of papayas grown in Hawaii, effective under the applicable provisions of the Agricultural Marketing Agreement Act of 1937, as amended (7 U.S.C. 601-674), and upon the basis of the recommendations and information submitted by the Papaya Administrative Committee, established under this marketing order, and upon other information, it is found that this amendment will tend to effectuate the declared policy of the act. This amendment has not been determined significant under the USDA criteria for implementing Executive Order 12044.

The Papaya Administrative Committee reports that supply of papayas is less than anticipated due to wet weather and loss of fruit due to anthracnose. Demand is good and additional supplies are needed. The recommended amendment is consistent with the quality of much of the potential supply in the period specified. The amendment is designed to permit movement of available supplies of papayas consistent with the interests of producers and consumers.

It is hereby further found that it is impracticable and contrary to the public interest to give preliminary notice, engage in public rulemaking, and postpone the effective date of this amendment until 30 days after publication in the FEDERAL REGISTER (5 U.S.C. 553) in that the time intervening between the date when information upon which this amendment is based became available and the time when this amendment must become effective in order to effectuate the declared policy of the act is insufficient; and this amendment relieves restrictions on the handling of papayas grown in Hawaii.

In § 928.309 (Papaya Regulation 9; 44 FR 30) paragraph (b) is redesignated as paragraph (c) and a new paragraph (b) inserted reading as follows:

§ 928.309 Papaya Regulation 9.

(a) * * *

(1) * * *

(2) * * *

(b) Notwithstanding the provisions of paragraph (a)(2) of this section, any handler may during the period January 15 through April 30, 1979, handle papayas to any export destination which meet the requirements of the Hawaii No. 1 grade, except that allowable tolerances for defects may total 5 percent: *Provided,* That not more than 3 percent shall be for serious damage, not more than 1 percent for immature fruit, and not more than 1 percent for decay: *Provided further,* That such papayas shall individually weigh not less than 11 ounces each.

* * * * *

(Secs. 1-10, 48 Stat. 31, as amended; 7 U.S.C. 601-674)

Dated January 15, 1979, to become effective January 15, 1979.

CHARLES R. BRADER,
*Deputy Director, Fruit and Vegetable Division, Agricultural Marketing Service.*

[FR Doc 79-1873 Filed 1-17-79; 8:45 am]

[3410-05-M]

## CHAPTER XIV—COMMODITY CREDIT CORPORATION, DEPARTMENT OF AGRICULTURE

### SUBCHAPTER B—LOANS, PURCHASES, AND OTHER OPERATIONS

[CCC Grain Price Support Regulations, 1978 Crop Barley Supplement]

## PART 1421—GRAINS AND SIMILARLY HANDLED COMMODITIES

### Subpart—1978 Crop Barley Loan and Purchase Program

AGENCY: Commodity Credit Corporation, Department of Agriculture.

ACTION: Final rule.

SUMMARY: The purpose of this rule is to set forth the: (1) Final loan and purchase availability dates, (2) maturity dates, and (3) loan and purchase rates and premiums and discounts under which Commodity Credit Corporation (CCC) will extend price support on 1978 crop barley. This rule is needed in order to provide a price support program for barley. This rule will enable eligible barley producers to obtain loans and purchases on their eligible 1978 crop barley.

EFFECTIVE DATE: January 18, 1979.

ADDRESS: Price Support and Loan Division, ASCS, U.S. Department of Agriculture, 3732 South Building, P.O. Box 2415, Washington, D.C. 20013.

FOR FURTHER INFORMATION CONTACT:

Merle Strawderman, ASCS, (202) 447-7973.

SUPPLEMENTARY INFORMATION: A notice of proposed rulemaking was published in the FEDERAL REGISTER on December 21, 1977, 42 FR 56751 stating that the Department of Agriculture proposed to make determinations and issue regulations relative to a loan and purchase program for the 1978 crop of barley. Such determinations included determining loan and purchase rates and other related program provisions. Nineteen responses were received: 5 recommendations pertained to loan rates, and 14 dealt with target prices. It has been determined that the loan and purchase rates for 1978 crop barley on a national average will be $1.63 per bushel. The final availability date for purchases will be changed to March 31, 1979, the same as for loans

Producers who wish to secure loans can do so by contacting their local Agricultural Stabilization and Conservation Service Office or Agricultural Service Center.

FINAL RULE

Since storage can now be deducted, the General Regulations Governing Price Support for 1980 and Subsequent Crops, and any amendments thereto and the 1978 and Subsequent Crops Barley Loan and Purchase Regulations, and any amendments thereto in this Part 1421 are further supplemented for the 1978 crop of barley. Accordingly, the regulations in 7 CFR § 1421.72 through § 1421.76 and the title of the subpart are revised to read as provided below effective as to the 1978 crop of barley. The material previously appearing in these sections shall remain in full force and effect as to the crops to which it is applicable.

### Subpart—1978 Crop Barley Loan and Purchase Program

Sec.
1421.72 Purpose.
1421.73 Availability.
1421.74 Maturity of loans.
1421.75 Warehouse charges.
1421.76 Loans and purchase rates and discounts.

AUTHORITY: Secs. 4 and 5, 62 Stat. 1070, as amended (15 U.S.C. 714b and c); secs. 105A, 401, 63 Stat. 1051, as amended (7 U.S.C. 1444c, 1421).

§ 1421.72 Purpose.

This supplement contains additional program provisions which together with the provisions of the General Regulations Governing Price Support for the 1978 and Subsequent Crops, the 1978 and Subsequent Crops Barley Loan and Purchase Program regulations, and any amendments thereto, apply to loans on and purchase of the 1978 crop of barley.

§ 1421.73 Availability.

(a) *Loans.* Producers desiring to participate in the program through loans must request a loan on their 1978 crop of eligible barley on or before March 31, 1979.

(b) *Purchases.* A producer desiring to offer eligible 1978 crop barley not under loan for purchase must execute and deliver to the county ASCS office on or before March 31, 1979, a Purchase Agreement (Form CCC-614) in-

dicating the approximate quantity of 1978-crop barley they will sell to CCC.

§ 1421.74 Maturity of loans.

Loans mature on demand but not later than the last day of the ninth calendar month following the month the loan is disbursed.

§ 1421.75 Warehouse charges.

If storage is not provided for through loan maturity the county office shall deduct storage charges at the daily storage rate for the storing warehouse times the number of days from the date the commodity was received or date through which storage has been provided for to the maturity date.

§ 1421.76 Loan and purchase rates and discounts.

(a) *Basic loan and purchase rates.* Basic rates per bushel for loan and settlement purposes for barley grading U.S. No. 2 or better are as follows:

1978 CROP BARLEY LOAN AND PURCHASE PROGRAM SUPPLEMENT

*1978—Crop Barley Loan and Purchase Rates*

| *County* | *Rate per Bushel* |
|---|---|
| ALABAMA | |
| All Counties | $1.60 |
| ALASKA* | |
| Delta | 1.54 |
| Fairbanks | 1.53 |
| Glenallen | 1.63 |
| Homer | 1.59 |
| Kenai-Sold | 1.66 |
| Palmer | 1.72 |
| Talkeetna | 1.72 |
| Weighted avg. simple average of marketing area loan rates | 1.63 |
| ARIZONA | |
| All Counties | 1.80 |
| ARKANSAS | |
| All Counties | 1.60 |
| CALIFORNIA | |
| Alameda | 1.98 |
| Alpine | 1.81 |
| Amador | 1.94 |
| Butte | 1.89 |
| Calaveras | 1.94 |
| Colusa | 1.93 |
| Contra Costa | 1.95 |
| El Dorado | 1.93 |
| Fresno | 1.92 |
| Glenn | 1.90 |
| Humboldt | 1.78 |
| Imperial | 1.92 |
| Inyo | 1.80 |
| Kern | 1.93 |
| Kings | 1.91 |
| Lake | 1.88 |
| Lassen | 1.78 |
| Los Angeles | 1.98 |
| Madera | 1.94 |
| Marin | 1.95 |
| Mariposa | 1.92 |
| Mendocino | 1.82 |
| Merced | 1.94 |
| Modoc | 1.76 |
| Monterey | 1.90 |
| Napa | 1.93 |
| Orange | 1.98 |
| Placer | 1.91 |
| Plumas | 1.81 |
| Riverside | 1.93 |

*In Alaska, loan rates are for marketing areas.

1978 CROP BARLEY LOAN AND PURCHASE PROGRAM SUPPLEMENT—Continued

| *County* | *Rate per Bushel* |
|---|---|
| Sacramento | 1.98 |
| San Benito | 1.90 |
| San Bernardino | 1.94 |
| San Diego | 1.98 |
| San Francisco | 1.98 |
| San Joaquin | 1.98 |
| San Luis Obispo | 1.90 |
| San Mateo | 1.95 |
| Santa Barbara | 1.89 |
| Santa Clara | 1.94 |
| Santa Cruz | 1.91 |
| Shasta | 1.78 |
| Sierra | 1.80 |
| Siskiyou | 1.76 |
| Solano | 1.95 |
| Sonoma | 1.93 |
| Stanislaus | 1.96 |
| Sutter | 1.92 |
| Tehama | 1.89 |
| Tulare | 1.90 |
| Tuolumne | 1.92 |
| Ventura | 1.93 |
| Yolo | 1.95 |
| Yuba | 1.92 |
| Weighted avg. for State | 1.91 |
| COLORADO | |
| All Counties | 1.66 |
| CONNECTICUT | |
| All Counties | 1.60 |
| DELAWARE | |
| All Counties | 1.60 |
| FLORIDA | |
| All Counties | 1.61 |
| GEORGIA | |
| All Counties | 1.61 |
| IDAHO | |
| Ada | 1.65 |
| Adams | 1.65 |
| Bannock | 1.65 |
| Bear Lake | 1.62 |
| Benewah | 1.74 |
| Bingham | 1.64 |
| Blaine | 1.65 |
| Boise | 1.65 |
| Bonner | 1.70 |
| Bonneville | 1.62 |
| Boundary | 1.69 |
| Butte | 1.64 |
| Camas | 1.65 |
| Canyon | 1.65 |
| Caribou | 1.62 |
| Cassia | 1.64 |
| Clark | 1.61 |
| Clearwater | 1.73 |
| Custer | 1.65 |
| Elmore | 1.65 |
| Franklin | 1.66 |
| Fremont | 1.62 |
| Gem | 1.65 |
| Gooding | 1.65 |
| Idaho | 1.69 |
| Jefferson | 1.62 |
| Jerome | 1.65 |
| Kootenai | 1.74 |
| Latah | 1.74 |
| Lemhi | 1.61 |
| Lewis | 1.73 |
| Lincoln | 1.65 |
| Madison | 1.62 |
| Minidoka | 1.66 |
| Nez Perce | 1.74 |
| Oneida | 1.65 |
| Owyhee | 1.65 |
| Payette | 1.65 |
| Power | 1.65 |
| Shoshone | 1.62 |
| Teton | 1.62 |
| Twin Falls | 1.66 |
| Valley | 1.65 |
| Washington | 1.65 |
| Weighted avg. for State | 1.65 |
| ILLINOIS | |
| Alexander | 1.66 |
| Cook | 1.61 |
| Madison | 1.65 |
| Saint Clair | 1.65 |
| All Other Counties | 1.56 |
| Weighted avg. for State | 1.56 |

1978 CROP BARLEY LOAN AND PURCHASE PROGRAM SUPPLEMENT—Continued

| *County* | *Rate per Bushel* |
|---|---|
| INDIANA | |
| All Counties | 1.56 |
| IOWA | |
| Pottawattamie | 1.62 |
| All Other Counties | 1.58 |
| Weighted avg. for State | 1.58 |
| KANSAS | |
| Wyandotte | 1.63 |
| All Other Counties | 1.59 |
| KENTUCKY | |
| All Counties | 1.57 |
| LOUISIANA | |
| East Baton Rouge | 1.78 |
| Jefferson | 1.78 |
| Orleans | 1.78 |
| Saint Charles | 1.78 |
| West Baton Rouge | 1.78 |
| All Other Counties | 1.61 |
| Weighted avg. for State | 1.61 |
| MAINE | |
| All Counties | 1.60 |
| MARYLAND | |
| Baltimore | 1.78 |
| All Other Counties | 1.60 |
| Weighted avg. for State | 1.60 |
| MASSACHUSETTS | |
| All Counties | 1.60 |
| MICHIGAN | |
| All Counties | 1.52 |
| MINNESOTA | |
| Aitkin | 1.68 |
| Anoka | 1.71 |
| Becker | 1.59 |
| Beltrami | 1.61 |
| Benton | 1.68 |
| Big Stone | 1.63 |
| Blue Earth | 1.71 |
| Brown | 1.69 |
| Carlton | 1.72 |
| Carver | 1.72 |
| Cass | 1.64 |
| Chippewa | 1.68 |
| Chisago | 1.71 |
| Clay | 1.58 |
| Clearwater | 1.58 |
| Cottonwood | 1.68 |
| Crow Wing | 1.64 |
| Dakota | 1.72 |
| Dodge | 1.71 |
| Douglas | 1.63 |
| Faribault | 1.70 |
| Fillmore | 1.68 |
| Freeborn | 1.71 |
| Goodhue | 1.71 |
| Grant | 1.61 |
| Hennepin | 1.72 |
| Houston | 1.67 |
| Hubbard | 1.61 |
| Isanti | 1.70 |
| Itasca | 1.67 |
| Jackson | 1.67 |
| Kanabec | 1.69 |
| Kandiyohi | 1.68 |
| Kittson | 1.52 |
| Koochiching | 1.65 |
| Lac Qui Parle | 1.67 |
| Lake of the Woods | 1.60 |
| Le Sueur | 1.72 |
| Lincoln | 1.64 |
| Lyon | 1.67 |
| McLeod | 1.71 |
| Mahnomen | 1.57 |
| Marshall | 1.55 |
| Martin | 1.70 |
| Meeker | 1.69 |
| Mille Lacs | 1.69 |
| Morrison | 1.66 |
| Mower | 1.70 |
| Murray | 1.66 |
| Nicollet | 1.71 |
| Nobles | 1.64 |
| Norman | 1.58 |
| Olmsted | 1.71 |
| Otter Tail | 1.60 |
| Pennington | 1.56 |
| Pine | 1.72 |
| Pipestone | 1.63 |
| Polk | 1.56 |
| Pope | 1.66 |

1978 CROP BARLEY LOAN AND PURCHASE PROGRAM SUPPLEMENT—Continued

| County | Rate per Bushel |
|---|---|
| Ramsey | 1.72 |
| Red Lake | 1.56 |
| Redwood | 1.69 |
| Renville | 1.68 |
| Rice | 1.72 |
| Rock | 1.61 |
| Roseau | 1.54 |
| Saint Louis | 1.72 |
| Scott | 1.72 |
| Sherburne | 1.71 |
| Sibley | 1.71 |
| Stearns | 1.68 |
| Steele | 1.72 |
| Stevens | 1.63 |
| Swift | 1.67 |
| Todd | 1.63 |
| Traverse | 1.61 |
| Wabasha | 1.71 |
| Wadena | 1.62 |
| Waseca | 1.72 |
| Washington | 1.72 |
| Watonwan | 1.70 |
| Wilkin | 1.59 |
| Winona | 1.69 |
| Wright | 1.72 |
| Yellow Medicine | 1.66 |
| Weighted avg. for State | 1.58 |
| **MISSISSIPPI** | |
| All Counties | 1.60 |
| **MISSOURI** | |
| Buchanan | 1.62 |
| Clay | 1.62 |
| Jackson | 1.62 |
| Saint Louis | 1.64 |
| All Other Counties | 1.60 |
| Weighted avg. for State | 1.60 |
| **MONTANA** | |
| Beaverhead | 1.56 |
| Big Horn | 1.51 |
| Blaine | 1.47 |
| Broadwater | 1.59 |
| Carbon | 1.52 |
| Carter | 1.42 |
| Cascade | 1.55 |
| Chouteau | 1.51 |
| Custer | 1.44 |
| Daniels | 1.41 |
| Dawson | 1.44 |
| Deer Lodge | 1.62 |
| Fallon | 1.42 |
| Fergus | 1.51 |
| Flathead | 1.67 |
| Gallatin | 1.62 |
| Garfield | 1.46 |
| Glacier | 1.54 |
| Golden Valley | 1.52 |
| Granite | 1.60 |
| Hill | 1.50 |
| Jefferson | 1.62 |
| Judith Basin | 1.52 |
| Lake | 1.60 |
| Lewis and Clark | 1.53 |
| Liberty | 1.52 |
| Lincoln | 1.67 |
| McCone | 1.44 |
| Madison | 1.62 |
| Meagher | 1.56 |
| Mineral | 1.64 |
| Missoula | 1.64 |
| Musselshell | 1.51 |
| Park | 1.60 |
| Petroleum | 1.49 |
| Phillips | 1.44 |
| Pondera | 1.53 |
| Powder River | 1.44 |
| Powell | 1.62 |
| Prairie | 1.44 |
| Ravalli | 1.60 |
| Richland | 1.41 |
| Roosevelt | 1.41 |
| Rosebud | 1.46 |
| Sanders | 1.64 |
| Sheridan | 1.39 |
| Silver Bow | 1.62 |
| Stillwater | 1.52 |
| Sweet Grass | 1.55 |
| Teton | 1.53 |
| Toole | 1.53 |
| Treasure | 1.46 |
| Valley | 1.43 |
| Wheatland | 1.53 |
| Wibaux | 1.42 |
| Yellowstone | 1.51 |
| Weighted avg. for State | 1.52 |

1978 CROP BARLEY LOAN AND PURCHASE PROGRAM SUPPLEMENT—Continued

| County | Rate per Bushel |
|---|---|
| **NEBRASKA** | |
| Douglas | 1.63 |
| All Other Counties | 1.55 |
| Weighted avg. for State | 1.52 |
| **NEVADA** | |
| All Counties | 1.80 |
| **NEW HAMPSHIRE** | |
| All Counties | 1.60 |
| **NEW JERSEY** | |
| All Counties | 1.60 |
| **NEW MEXICO** | |
| All Counties | 1.70 |
| **NEW YORK** | |
| Albany | 1.78 |
| New York City | 1.78 |
| All Other Counties | 1.60 |
| Weighted avg. for State | 1.60 |
| **NORTH CAROLINA** | |
| All Counties | 1.61 |
| **NORTH DAKOTA** | |
| Adams | 1.42 |
| Barnes | 1.54 |
| Benson | 1.48 |
| Billings | 1.40 |
| Bottineau | 1.42 |
| Bowman | 1.40 |
| Burke | 1.40 |
| Burleigh | 1.46 |
| Cass | 1.57 |
| Cavalier | 1.48 |
| Dickey | 1.52 |
| Divide | 1.40 |
| Dunn | 1.40 |
| Eddy | 1.49 |
| Emmons | 1.44 |
| Foster | 1.50 |
| Golden Valley | 1.40 |
| Grand Forks | 1.54 |
| Grant | 1.41 |
| Griggs | 1.52 |
| Hettinger | 1.40 |
| Kidder | 1.48 |
| La Moure | 1.51 |
| Logan | 1.48 |
| McHenry | 1.44 |
| McIntosh | 1.49 |
| McKenzie | 1.43 |
| McLean | 1.44 |
| Mercer | 1.43 |
| Morton | 1.43 |
| Mountrail | 1.40 |
| Nelson | 1.51 |
| Oliver | 1.44 |
| Pembina | 1.51 |
| Pierce | 1.46 |
| Ramsey | 1.49 |
| Ransom | 1.54 |
| Renville | 1.41 |
| Richland | 1.57 |
| Rolette | 1.45 |
| Sargent | 1.56 |
| Sheridan | 1.45 |
| Sioux | 1.43 |
| Slope | 1.40 |
| Stark | 1.40 |
| Steele | 1.54 |
| Stutsman | 1.53 |
| Towner | 1.46 |
| Traill | 1.54 |
| Walsh | 1.52 |
| Ward | 1.42 |
| Wells | 1.48 |
| Williams | 1.40 |
| Weighted avg. for State | 1.50 |
| **OHIO** | |
| All Counties | 1.54 |
| **OKLAHOMA** | |
| All Counties | 1.61 |
| **OREGON** | |
| Baker | 1.72 |
| Benton | 1.77 |
| Clackamas | 1.81 |
| Clatsop | 1.87 |
| Columbia | 1.87 |
| Coos | 1.68 |
| Crook | 1.76 |
| Curry | 1.66 |

1978 CROP BARLEY LOAN AND PURCHASE PROGRAM SUPPLEMENT—Continued

| County | Rate per Bushel |
|---|---|
| Deschutes | 1.76 |
| Douglas | 1.70 |
| Gilliam | 1.81 |
| Grant | 1.76 |
| Harney | 1.63 |
| Hood River | 1.83 |
| Jackson | 1.69 |
| Jefferson | 1.79 |
| Josephine | 1.69 |
| Klamath | 1.69 |
| Lake | 1.68 |
| Lane | 1.76 |
| Lincoln | 1.76 |
| Linn | 1.78 |
| Malheur | 1.66 |
| Marion | 1.79 |
| Morrow | 1.80 |
| Multnomah | 1.87 |
| Polk | 1.79 |
| Sherman | 1.82 |
| Tillamook | 1.82 |
| Umatilla | 1.77 |
| Union | 1.76 |
| Wallowa | 1.72 |
| Wasco | 1.83 |
| Washington | 1.83 |
| Wheeler | 1.78 |
| Yamhill | 1.81 |
| Weighted avg. for State | 1.75 |
| **PENNSYLVANIA** | |
| Philadelphia | 1.78 |
| All Other Counties | 1.60 |
| Weighted avg. for State | 1.60 |
| **RHODE ISLAND** | |
| All Counties | 1.60 |
| **SOUTH CAROLINA** | |
| Charleston | 1.76 |
| All Other Counties | 1.61 |
| Weighted avg. for State | 1.61 |
| **SOUTH DAKOTA** | |
| Aurora | 1.52 |
| Beadle | 1.55 |
| Bennett | 1.44 |
| Bon Homme | 1.55 |
| Brookings | 1.60 |
| Brown | 1.54 |
| Brule | 1.50 |
| Buffalo | 1.52 |
| Butte | 1.37 |
| Campbell | 1.47 |
| Charles Mix | 1.53 |
| Clark | 1.56 |
| Clay | 1.57 |
| Codington | 1.59 |
| Corson | 1.44 |
| Custer | 1.42 |
| Davison | 1.52 |
| Day | 1.57 |
| Deuel | 1.62 |
| Dewey | 1.46 |
| Douglas | 1.53 |
| Edmunds | 1.51 |
| Fall River | 1.42 |
| Faulk | 1.53 |
| Grant | 1.52 |
| Gregory | 1.52 |
| Haakon | 1.44 |
| Hamlin | 1.59 |
| Hand | 1.52 |
| Hanson | 1.52 |
| Harding | 1.39 |
| Hughes | 1.50 |
| Hutchinson | 1.54 |
| Hyde | 1.52 |
| Jackson | 1.44 |
| Jerauld | 1.52 |
| Jones | 1.49 |
| Kingsbury | 1.59 |
| Lake | 1.58 |
| Lawrence | 1.37 |
| Lincoln | 1.57 |
| Lyman | 1.49 |
| McCook | 1.53 |
| McPherson | 1.51 |
| Marshall | 1.56 |
| Meade | 1.40 |
| Mellette | 1.48 |
| Miner | 1.54 |
| Minnehaha | 1.57 |
| Moody | 1.58 |
| Pennington | 1.42 |
| Perkins | 1.41 |

1978 CROP BARLEY LOAN AND PURCHASE PROGRAM SUPPLEMENT—Continued

| County | Rate per Bushel |
|---|---|
| Potter | 1.51 |
| Roberts | 1.60 |
| Sanborn | 1.52 |
| Shannon | 1.42 |
| Spink | 1.54 |
| Stanley | 1.49 |
| Sully | 1.51 |
| Todd | 1.48 |
| Tripp | 1.49 |
| Turner | 1.57 |
| Union | 1.58 |
| Walworth | 1.48 |
| Washabaugh | 1.44 |
| Yankton | 1.57 |
| Ziebach | 1.43 |
| Weighted avg. for State | 1.54 |
| TENNESSEE | |
| Shelby | 1.66 |
| All Other Counties | 1.60 |
| Weighted avg. for State | 1.60 |
| TEXAS | |
| Chambers | 1.80 |
| Galveston | 1.80 |
| Harris | 1.80 |
| Jefferson | 1.80 |
| Nueces | 1.80 |
| San Patrici | 1.80 |
| All Other Counties | 1.64 |
| Weighted avg. for State | 1.64 |
| UTAH | |
| All Counties | 1.70 |
| VERMONT | |
| All Counties | 1.60 |
| VIRGINIA | |
| Chesapeake (Norfolk) | 1.70 |
| All Other Counties | 1.60 |
| Weighted avg. for State | 1.60 |
| WASHINGTON | |
| Adams | 1.77 |
| Asotin | 1.77 |
| Benton | 1.79 |
| Chelan | 1.81 |
| Clallam | 1.67 |
| Clark | 1.87 |
| Columbia | 1.78 |
| Cowlitz | 1.87 |
| Douglas | 1.76 |
| Ferry | 1.72 |
| Franklin | 1.78 |
| Garfield | 1.78 |
| Grant | 1.77 |
| Grays Harbor | 1.76 |
| Island | 1.80 |
| Jefferson | 1.72 |
| King | 1.87 |
| Kitsap | 1.80 |
| Kittitas | 1.79 |
| Klickitat | 1.80 |
| Lewis | 1.81 |
| Lincoln | 1.76 |
| Mason | 1.74 |
| Okanogan | 1.75 |
| Pacific | 1.76 |
| Pend Oreille | 1.70 |
| Pierce | 1.87 |
| San Juan | 1.75 |
| Skagit | 1.75 |
| Skamania | 1.82 |
| Snohomish | 1.80 |
| Spokane | 1.74 |
| Stevens | 1.71 |
| Thurston | 1.81 |
| Wahkiakum | 1.84 |
| Walla Walla | 1.78 |
| Whatcom | 1.73 |
| Whitman | 1.76 |
| Yakima | 1.78 |
| Weighted avg. for State | 1.76 |
| WEST VIRGINIA | |
| All Counties | 1.60 |
| WISCONSIN | |
| Douglas | 1.67 |
| All Other Counties | 1.57 |
| Weighted avg. for State | 1.57 |
| WYOMING | |
| All Counties | 1.64 |

(b) *Schedule of Discounts for 1978—Crop Barley*

DISCOUNTS

(a) Grade discounts:

| | |
|---|---|
| U.S. No. 3 | −4 |
| U.S. No. 4 | −8 |
| U.S. Grade No. 5 | −20 |

(b) Special discounts:

| | |
|---|---|
| Garlicky | −10 |
| Weed control discount (where required by § 1421.24) | −10 |

(c) *Other.* Barley with quality factors exceeding limits shown in foregoing schedule or barley that (1) contains in excess of 14.5 percent moisture, (2) is weevily, (3) is musty, (4) sour, shall not be eligible for loan. In the event quantities of barley exceeding limits shown are delivered in satisfaction of loan obligations, such quantities will be discounted on the basis of the schedule of discounts as provided by the Kansas City Commodity Office for settlement purposes. Such discounts will be established not later than the time delivery of barley to CCC begins and will thereafter be adjusted from time to time as CCC determines appropriate to reflect changes in market conditions. Producers may obtain schedules of such factors and discounts at county ASCS offices approximately one month prior to the loan maturity date.

NOTE.—Discounts are cumulative except only one grade discount shall be applied.

Signed at Washington, D.C., on January 9, 1979.

STEWART N. SMITH,
*Acting Executive Vice President, Commodity Credit Corporation.*

[FR Doc. 79-1653 Filed 1-17-79; 8:45 am]

---

[3410-05-M]

[CCC Grain Price Support Regulations, 1978 Crop Wheat Supplement]

## PART 1421—GRAINS AND SIMILARLY HANDLED COMMODITIES

### Subpart—1978 Crop Wheat Loan and Purchase Program

AGENCY: Commodity Credit Corporation, Department of Agriculture.

ACTION: Final rule.

SUMMARY: The purpose of this rule is to set forth the: (1) Final loan and purchase availability dates, (2) maturity dates, and (3) loan and purchase rates and premiums and discounts under which Commodity Credit Corporation (CCC) will extend price support on 1978 crop wheat. This rule is needed in order to provide a price support program for wheat. This rule will enable eligible wheat producers to obtain loans and purchases on their eligible 1978 crop wheat.

EFFECTIVE DATE: January 18, 1979.

ADDRESS: Price Support and Loan Division, ASCS, U.S. Department of Agriculture, 3732 South Building, P.O. Box 2415, Washington, D. C. 20013.

FOR FURTHER INFORMATION CONTACT:

Merle Strawderman, ASCS, (202) 447-7973.

SUPPLEMENTARY INFORMATION: A notice of proposed rulemaking was published in the FEDERAL REGISTER on December 21, 1977, 42 FR 56751 stating that the Department of Agriculture proposed to make determinations and issue regulations relative to a loan and purchase program for the 1978 crop of wheat. Such determinations included determining loan and purchase rates and other related program provisions. Twelve recommendations were reviewed: six dealing with loan rates, and six pertaining to target prices. After considering applicable factors, it has been determined that the loan and purchase rates for 1978 crop wheat on a national average will be $2.35 per bushel.

Producers who wish to secure loans can do so by contacting their local Agricultural Stabilization and Conservation Service Office or Agricultural Service Center.

FINAL RULE

Since storage can now be deducted, the General Regulations Governing Price Support for 1978 and Subsequent Crops, and any amendments thereto and the 1978 and Subsequent Crops Wheat Loan and Purchase Regulations, and any amendments thereto in this Part 1421 are further supplemented for the 1978 crop of wheat. Accordingly, the regulations in 7 CFR § 1421.485 through § 1421.488 and the title of the subpart are revised to read as provided below effective as to the 1978 crop of wheat. The material previously appearing in these sections shall remain in full force and effect as to the crops to which it is applicable.

Subpart—1978 Crop Wheat Loan and Purchase Program

Sec.
1421.485 Availability.
1421.486 Maturity of loans.
1421.487 Ineligible classes.
1421.488 Warehouse charges.
1421.489 Loan and purchase rates premiums and discounts.

AUTHORITY: Secs. 4 and 5, 62 Stat. 1070, as amended (15 U.S.C. 714 and c); Secs. 107A, 401, 63 Stat. 1051, as amended (7 U.S.C. 1445b, 1421).

§ 1421.485 Availability.

(a) *Loans.* Producers desiring to participate in the program through loans must request a loan on their 1978 crop of eligible wheat on or before March 31, 1979.

(b) *Purchases.* A producer desiring to offer eligible 1978 crop wheat not under loan for purchase must execute and deliver to the county ASCS office on or before March 31, 1979, a Purchase Agreement (Form CCC-614) indicating the approximate quantity of 1978 crop wheat he will sell to CCC.

§ 1421.486 Maturity of loans.

Loans mature on demand but not later than the last day of the ninth calendar month following the month the loan is disbursed.

§ 1421.487 Ineligible classes.

Unclassed wheat shall not be eligible for loan or purchase.

§ 1421.488 Warehouse charges.

If storage is not provided through loan maturity, the county office shall deduct storage charges at the daily storage rate for the storing warehouse times the number of days from the date the commodity was received or date through which storage has been provided for to maturity.

§ 1421.489 Loan and purchase rates premiums and discounts.

(a) *Basic loan and purchase rates.* Basic rates per bushel for loan and settlement purposes for wheat grading U.S. No. 1 and are as follows:

1978 CROP WHEAT LOAN AND PURCHASE PROGRAM SUPPLEMENT

*1978—Crop Wheat Loan and Purchase Rates*

| *County* | *Rate per Bushel* |
|---|---|
| ALABAMA | |
| Mobile | $2.36 |
| All Other Counties | 2.17 |
| Weighted Avg. for State | 2.27 |
| ARIZONA | |
| All Counties | 2.27 |
| ARKANSAS | |
| All Counties | 2.18 |
| CALIFORNIA | |
| Alameda | 2.43 |
| Alpine | 2.25 |
| Amador | 2.38 |
| Butte | 2.32 |
| Calaveras | 2.38 |
| Colusa | 2.37 |
| Contra Costa | 2.38 |
| El Dorado | 2.37 |
| Fresno | 2.33 |
| Glenn | 2.31 |
| Humboldt | 2.20 |
| Imperial | 2.35 |
| Inyo | 2.31 |
| Kern | 2.38 |
| Kings | 2.35 |
| Lake | 2.31 |
| Lassen | 2.20 |
| Los Angeles | 2.43 |
| Madera | 2.36 |
| Marin | 2.36 |
| Mariposa | 2.36 |
| Mendocino | 2.25 |

1978 CROP WHEAT LOAN AND PURCHASE PROGRAM SUPPLEMENT—Continued

| *County* | *Rate per Bushel* |
|---|---|
| Merced | 2.39 |
| Modoc | 2.20 |
| Monterey | 2.33 |
| Napa | 2.37 |
| Orange | 2.43 |
| Placer | 2.37 |
| Plumas | 2.20 |
| Riverside | 2.35 |
| Sacramento | 2.43 |
| San Benito | 2.36 |
| San Bernardino | 2.44 |
| San Diego | 2.43 |
| San Francisco | 2.43 |
| San Joaquin | 2.43 |
| San Luis Obispo | 2.32 |
| San Mateo | 2.43 |
| Santa Barbara | 2.33 |
| Santa Clara | 2.37 |
| Santa Cruz | 2.38 |
| Shasta | 2.21 |
| Sierra | 2.22 |
| Siskiyou | 2.20 |
| Solano | 2.38 |
| Sonoma | 2.35 |
| Stanislaus | 2.40 |
| Sutter | 2.37 |
| Tehama | 2.27 |
| Tulare | 2.35 |
| Tuolumne | 2.36 |
| Ventura | 2.40 |
| Yolo | 2.38 |
| Yuba | 2.37 |
| Weighted Avg. for State | 2.46 |
| COLORADO | |
| Adams | 2.07 |
| Alamosa | 2.04 |
| Arapahoe | 2.07 |
| Archuleta | 2.01 |
| Baca | 2.11 |
| Bent | 2.07 |
| Boulder | 2.06 |
| Chaffee | 2.04 |
| Cheyenne | 2.08 |
| Conejos | 2.04 |
| Costilla | 2.04 |
| Crowley | 2.07 |
| Custer | 2.06 |
| Delta | 1.98 |
| Denver | 2.07 |
| Dolores | 1.98 |
| Douglas | 2.07 |
| Eagle | 2.01 |
| Elbert | 2.07 |
| El Paso | 2.07 |
| Fremont | 2.06 |
| Garfield | 2.01 |
| Grand | 2.04 |
| Huerfano | 2.08 |
| Jackson | 2.04 |
| Jefferson | 2.06 |
| Kiowa | 2.08 |
| Kit Carson | 2.08 |
| La Plata | 1.98 |
| Larimer | 2.07 |
| Las Animas | 2.10 |
| Lincoln | 2.07 |
| Logan | 2.07 |
| Mesa | 1.98 |
| Moffat | 2.04 |
| Montezuma | 1.98 |
| Montrose | 1.98 |
| Morgan | 2.07 |
| Otero | 2.07 |
| Ouray | 1.98 |
| Phillips | 2.07 |
| Pitkin | 1.98 |
| Prowers | 2.09 |
| Pueblo | 2.07 |
| Rio Blanco | 2.01 |
| Rio Grande | 2.04 |
| Routt | 2.04 |
| Saguache | 2.04 |
| San Miguel | 1.98 |
| Sedgwick | 2.07 |
| Summit | 2.01 |
| Teller | 2.06 |
| Washington | 2.07 |
| Weld | 2.07 |
| Yuma | 2.08 |

1978 CROP WHEAT LOAN AND PURCHASE PROGRAM SUPPLEMENT—Continued

| *County* | *Rate per Bushel* |
|---|---|
| Weighted Avg. for State | 2.17 |
| CONNECTICUT | |
| All Counties | 2.19 |
| DELAWARE | |
| All Counties | 2.22 |
| FLORIDA | |
| All Counties | 2.16 |
| GEORGIA | |
| All Counties | 2.16 |
| IDAHO | |
| Ada | 2.19 |
| Adams | 2.19 |
| Bannock | 2.17 |
| Bear Lake | 2.15 |
| Benewah | 2.30 |
| Bingham | 2.15 |
| Blaine | 2.15 |
| Boise | 2.19 |
| Bonner | 2.22 |
| Bonneville | 2.14 |
| Boundary | 2.20 |
| Butte | 2.14 |
| Camas | 2.16 |
| Canyon | 2.19 |
| Caribou | 2.16 |
| Cassia | 2.18 |
| Clark | 2.12 |
| Clearwater | 2.28 |
| Custer | 2.14 |
| Elmore | 2.18 |
| Franklin | 2.18 |
| Fremont | 2.13 |
| Gem | 2.19 |
| Gooding | 2.19 |
| Idaho | 2.27 |
| Jefferson | 2.14 |
| Jerome | 2.19 |
| Kootenai | 2.28 |
| Latah | 2.30 |
| Lemhi | 2.14 |
| Lewis | 2.29 |
| Lincoln | 2.18 |
| Madison | 2.14 |
| Minidoka | 2.18 |
| Nez Perce | 2.32 |
| Oneida | 2.18 |
| Owyhee | 2.18 |
| Payette | 2.19 |
| Power | 2.18 |
| Shoshone | 2.28 |
| Teton | 2.13 |
| Twin Falls | 2.19 |
| Valley | 2.18 |
| Washington | 2.19 |
| Weighted Avg. for State | 2.31 |
| ILLINOIS | |
| Adams | 2.20 |
| Alexander | 2.23 |
| Bond | 2.26 |
| Boone | 2.28 |
| Brown | 2.20 |
| Bureau | 2.26 |
| Calhoun | 2.27 |
| Carroll | 2.25 |
| Cass | 2.22 |
| Champaign | 2.26 |
| Christian | 2.24 |
| Clark | 2.22 |
| Clay | 2.22 |
| Clinton | 2.26 |
| Coles | 2.22 |
| Cook | 2.28 |
| Crawford | 2.21 |
| Cumberland | 2.22 |
| De Kalb | 2.28 |
| DeWitt | 2.22 |
| Douglas | 2.23 |
| DuPage | 2.28 |
| Edgar | 2.24 |
| Edwards | 2.22 |
| Effingham | 2.24 |
| Fayette | 2.25 |
| Ford | 2.26 |
| Franklin | 2.26 |
| Fulton | 2.24 |
| Gallatin | 2.19 |

1978 CROP WHEAT LOAN AND PURCHASE PROGRAM SUPPLEMENT—Continued

| County | Rate per Bushel |
|---|---|
| Greene | 2.26 |
| Grundy | 2.28 |
| Hamilton | 2.20 |
| Hancock | 2.20 |
| Hardin | 2.19 |
| Henderson | 2.22 |
| Henry | 2.25 |
| Iroquois | 2.28 |
| Jackson | 2.25 |
| Jasper | 2.21 |
| Jefferson | 2.26 |
| Jersey | 2.27 |
| Jo Daviess | 2.25 |
| Johnson | 2.23 |
| Kane | 2.28 |
| Kankakee | 2.28 |
| Kendall | 2.28 |
| Knox | 2.24 |
| Lake | 2.28 |
| LaSalle | 2.28 |
| Lawrence | 2.21 |
| Lee | 2.27 |
| Livingston | 2.27 |
| Logan | 2.22 |
| McDonough | 2.22 |
| McHenry | 2.28 |
| McLean | 2.24 |
| Macon | 2.22 |
| Macoupin | 2.26 |
| Madison | 2.27 |
| Marion | 2.26 |
| Marshall | 2.25 |
| Mason | 2.20 |
| Massac | 2.22 |
| Menard | 2.20 |
| Mercer | 2.24 |
| Monroe | 2.27 |
| Montgomery | 2.26 |
| Morgan | 2.24 |
| Moultrie | 2.23 |
| Ogle | 2.26 |
| Peoria | 2.24 |
| Perry | 2.26 |
| Piatt | 2.22 |
| Pike | 2.21 |
| Pope | 2.20 |
| Pulaski | 2.23 |
| Putnam | 2.25 |
| Randolph | 2.27 |
| Richland | 2.21 |
| Rock Island | 2.25 |
| Saint Clair | 2.27 |
| Saline | 2.20 |
| Sangamon | 2.24 |
| Schuyler | 2.20 |
| Scott | 2.22 |
| Shelby | 2.24 |
| Stark | 2.24 |
| Stephenson | 2.27 |
| Tazewell | 2.22 |
| Union | 2.23 |
| Vermilion | 2.27 |
| Wabash | 2.21 |
| Warren | 2.24 |
| Washington | 2.26 |
| Wayne | 2.22 |
| White | 2.19 |
| Whiteside | 2.26 |
| Will | 2.28 |
| Williamson | 2.24 |
| Winnebago | 2.27 |
| Woodford | 2.24 |
| Weighted Avg. for State | 2.34 |
| **INDIANA** | |
| Adams | 2.21 |
| Allen | 2.21 |
| Bartholomew | 2.21 |
| Benton | 2.26 |
| Blackford | 2.21 |
| Boone | 2.20 |
| Brown | 2.21 |
| Carroll | 2.24 |
| Cass | 2.24 |
| Clark | 2.26 |
| Clay | 2.22 |
| Clinton | 2.20 |
| Crawford | 2.26 |
| Daviess | 2.22 |
| Dearborn | 2.21 |

1978 CROP WHEAT LOAN AND PURCHASE PROGRAM SUPPLEMENT—Continued

| County | Rate per Bushel |
|---|---|
| Decatur | 2.21 |
| De Kalb | 2.21 |
| Delaware | 2.21 |
| Dubois | 2.23 |
| Elkhart | 2.23 |
| Fayette | 2.21 |
| Floyd | 2.26 |
| Fountain | 2.24 |
| Franklin | 2.21 |
| Fulton | 2.24 |
| Gibson | 2.21 |
| Grant | 2.20 |
| Greene | 2.22 |
| Hamilton | 2.21 |
| Hancock | 2.21 |
| Harrison | 2.26 |
| Hendricks | 2.20 |
| Henry | 2.21 |
| Howard | 2.20 |
| Huntington | 2.20 |
| Jackson | 2.22 |
| Jasper | 2.27 |
| Jay | 2.21 |
| Jefferson | 2.24 |
| Jennings | 2.22 |
| Johnson | 2.20 |
| Knox | 2.21 |
| Kosciusko | 2.24 |
| Lagrange | 2.20 |
| Lake | 2.28 |
| La Porte | 2.28 |
| Lawrence | 2.22 |
| Madison | 2.21 |
| Marion | 2.21 |
| Marshall | 2.24 |
| Martin | 2.22 |
| Miami | 2.20 |
| Monroe | 2.21 |
| Montgomery | 2.22 |
| Morgan | 2.20 |
| Newton | 2.27 |
| Noble | 2.21 |
| Ohio | 2.21 |
| Orange | 2.24 |
| Owen | 2.21 |
| Parke | 2.24 |
| Perry | 2.22 |
| Pike | 2.22 |
| Porter | 2.28 |
| Posey | 2.19 |
| Pulaski | 2.27 |
| Putnam | 2.20 |
| Randolph | 2.21 |
| Ripley | 2.21 |
| Rush | 2.21 |
| Saint Joseph | 2.26 |
| Scott | 2.24 |
| Shelby | 2.21 |
| Spencer | 2.22 |
| Starke | 2.27 |
| Steuben | 2.21 |
| Sullivan | 2.22 |
| Switzerland | 2.22 |
| Tippecanoe | 2.23 |
| Tipton | 2.20 |
| Union | 2.21 |
| Vanderburgh | 2.21 |
| Vermillion | 2.24 |
| Vigo | 2.23 |
| Wabash | 2.20 |
| Warren | 2.26 |
| Warrick | 2.22 |
| Washington | 2.24 |
| Wayne | 2.21 |
| Wells | 2.21 |
| White | 2.26 |
| Whitley | 2.20 |
| Weighted Avg. for State | 2.32 |
| **IOWA** | |
| Pottawattamie | 2.31 |
| All Other Counties | 2.20 |
| Weighted Avg. for State | 2.30 |
| **KANSAS** | |
| Allen | 2.26 |
| Anderson | 2.29 |
| Atchison | 2.31 |
| Barber | 2.15 |
| Barton | 2.15 |

1978 CROP WHEAT LOAN AND PURCHASE PROGRAM SUPPLEMENT—Continued

| County | Rate per Bushel |
|---|---|
| Bourbon | 2.27 |
| Brown | 2.29 |
| Butler | 2.19 |
| Chase | 2.22 |
| Chautauqua | 2.22 |
| Cherokee | 2.24 |
| Cheyenne | 2.08 |
| Clark | 2.12 |
| Clay | 2.20 |
| Cloud | 2.20 |
| Coffey | 2.27 |
| Comanche | 2.13 |
| Cowley | 2.19 |
| Crawford | 2.25 |
| Decatur | 2.12 |
| Dickinson | 2.19 |
| Doniphan | 2.29 |
| Douglas | 2.30 |
| Edwards | 2.15 |
| Elk | 2.22 |
| Ellis | 2.15 |
| Ellsworth | 2.18 |
| Finney | 2.12 |
| Ford | 2.13 |
| Franklin | 2.30 |
| Geary | 2.22 |
| Gove | 2.12 |
| Graham | 2.14 |
| Grant | 2.10 |
| Gray | 2.12 |
| Greeley | 2.08 |
| Greenwood | 2.22 |
| Hamilton | 2.09 |
| Harper | 2.17 |
| Harvey | 2.18 |
| Haskell | 2.11 |
| Hodgeman | 2.14 |
| Jackson | 2.28 |
| Jefferson | 2.30 |
| Jewell | 2.19 |
| Johnson | 2.31 |
| Kearny | 2.10 |
| Kingman | 2.18 |
| Kiowa | 2.15 |
| Labette | 2.24 |
| Lane | 2.12 |
| Leavenworth | 2.31 |
| Lincoln | 2.18 |
| Linn | 2.29 |
| Logan | 2.09 |
| Lyon | 2.24 |
| McPherson | 2.18 |
| Marion | 2.18 |
| Marshall | 2.24 |
| Meade | 2.12 |
| Miami | 2.30 |
| Mitchell | 2.18 |
| Montgomery | 2.24 |
| Morris | 2.22 |
| Morton | 2.11 |
| Nemaha | 2.26 |
| Neosho | 2.25 |
| Ness | 2.14 |
| Norton | 2.14 |
| Osage | 2.27 |
| Osborne | 2.18 |
| Ottawa | 2.19 |
| Pawnee | 2.15 |
| Phillips | 2.15 |
| Pottawatomie | 2.26 |
| Pratt | 2.15 |
| Rawlins | 2.10 |
| Reno | 2.18 |
| Republic | 2.20 |
| Rice | 2.18 |
| Riley | 2.24 |
| Rooks | 2.16 |
| Rush | 2.15 |
| Russell | 2.16 |
| Saline | 2.19 |
| Scott | 2.10 |
| Sedgwick | 2.18 |
| Seward | 2.11 |
| Shawnee | 2.28 |
| Sheridan | 2.12 |
| Sherman | 2.08 |
| Smith | 2.18 |
| Stafford | 2.15 |
| Stanton | 2.09 |

1978 CROP WHEAT LOAN AND PURCHASE PROGRAM SUPPLEMENT—Continued

| County | Rate per Bushel |
|---|---|
| Stevens | 2.11 |
| Sumner | 2.18 |
| Thomas | 2.10 |
| Trego | 2.14 |
| Wabaunsee | 2.25 |
| Wallace | 2.08 |
| Washington | 2.22 |
| Wichita | 2.09 |
| Wilson | 2.24 |
| Woodson | 2.25 |
| Wyandotte | 2.31 |
| Weighted Avg. for State | 2.26 |
| **KENTUCKY** | |
| Jefferson | 2.27 |
| All Other Counties | 2.19 |
| Weighted Avg. for State | 2.29 |
| **LOUISIANA** | |
| East Baton Rouge | 2.37 |
| Jefferson | 2.37 |
| Orleans | 2.37 |
| Saint Charles | 2.37 |
| West Baton Rouge | 2.37 |
| All Other Counties | 2.22 |
| Weighted Avg. for State | 2.32 |
| **MAINE** | |
| All Counties | 2.16 |
| **MARYLAND** | |
| Baltimore | 2.35 |
| All Other Counties | 2.22 |
| Weighted Avg. for State | 2.32 |
| **MASSACHUSETTS** | |
| All Counties | 2.18 |
| **MICHIGAN** | |
| Alcona | 2.11 |
| Alger | 2.12 |
| Allegan | 2.20 |
| Alpena | 2.08 |
| Antrim | 2.08 |
| Arenac | 2.12 |
| Baraga | 2.12 |
| Barry | 2.19 |
| Bay | 2.16 |
| Benzie | 2.11 |
| Berrien | 2.24 |
| Branch | 2.21 |
| Calhoun | 2.20 |
| Cass | 2.21 |
| Charlevoix | 2.07 |
| Cheboygan | 2.07 |
| Chippewa | 2.12 |
| Clare | 2.14 |
| Clinton | 2.17 |
| Crawford | 2.11 |
| Delta | 2.12 |
| Dickinson | 2.12 |
| Eaton | 2.19 |
| Emmet | 2.05 |
| Genesee | 2.19 |
| Gladwin | 2.14 |
| Gogebic | 2.12 |
| Grand Traverse | 2.11 |
| Gratiot | 2.17 |
| Hillsdale | 2.22 |
| Houghton | 2.12 |
| Huron | 2.18 |
| Ingham | 2.19 |
| Ionia | 2.17 |
| Iosco | 2.12 |
| Iron | 2.12 |
| Isabella | 2.16 |
| Jackson | 2.20 |
| Kalamazoo | 2.20 |
| Kalkaska | 2.11 |
| Kent | 2.17 |
| Keweenaw | 2.12 |
| Lake | 2.13 |
| Lapeer | 2.19 |
| Leelanau | 2.10 |
| Lenawee | 2.23 |
| Livingston | 2,20 |
| Luce | 2.12 |
| Mackinac | 2.12 |
| Macomb | 2.22 |
| Manistee | 2.12 |
| Marquette | 2.12 |
| Mason | 2.15 |

1978 CROP WHEAT LOAN AND PURCHASE PROGRAM SUPPLEMENT—Continued

| County | Rate per Bushel |
|---|---|
| Mecosta | 2.16 |
| Menominee | 2.12 |
| Midland | 2.16 |
| Missaukee | 2.11 |
| Monroe | 2.25 |
| Montcalm | 2.17 |
| Montmorency | 2.08 |
| Muskegon | 2.17 |
| Newago | 2.15 |
| Oakland | 2.22 |
| Oceana | 2.15 |
| Ogemaw | 2.12 |
| Ontonagon | 2.12 |
| Osceola | 2.13 |
| Oscoda | 2.11 |
| Otsego | 2.08 |
| Ottawa | 2.17 |
| Presque Isle | 2.07 |
| Roscommon | 2.11 |
| Saginaw | 2.19 |
| Saint Clair | 2.22 |
| Saint Joseph | 2.21 |
| Sanilac | 2.19 |
| Schoolcraft | 2.12 |
| Shiawassee | 2.19 |
| Tuscola | 2.19 |
| Van Buren | 2.20 |
| Washtenaw | 2.22 |
| Wayne | 2.22 |
| Wexford | 2.11 |
| Weighted Avg. for State | 2.29 |
| **MINNESOTA** | |
| Aitkin | 2.43 |
| Anoka | 2.43 |
| Becker | 2.33 |
| Beltrami | 2.36 |
| Benton | 2.42 |
| Big Stone | 2.34 |
| Blue Earth | 2.41 |
| Brown | 2.41 |
| Carlton | 2.43 |
| Carver | 2.43 |
| Cass | 2.39 |
| Chippewa | 2.37 |
| Chisago | 2.43 |
| Clay | 2.31 |
| Clearwater | 2.35 |
| Cottonwood | 2.38 |
| Crow Wing | 2.41 |
| Dakota | 2.43 |
| Dodge | 2.43 |
| Douglas | 2.38 |
| Faribault | 2.40 |
| Fillmore | 2.39 |
| Freeborn | 2.39 |
| Goodhue | 2.43 |
| Grant | 2.36 |
| Hennepin | 2.43 |
| Houston | 2.36 |
| Hubbard | 2.36 |
| Isanti | 2.43 |
| Itasca | 2.41 |
| Jackson | 2.37 |
| Kanabec | 2.42 |
| Kandiyohi | 2.41 |
| Kittson | 2.27 |
| Koochiching | 2.37 |
| Lac Qui Parle | 2.35 |
| Lake of the Woods | 2.31 |
| Le Sueur | 2.43 |
| Lincoln | 2.33 |
| Lyon | 2.36 |
| McLeod | 2.43 |
| Mahnomen | 2.33 |
| Marshall | 2.30 |
| Martin | 2.39 |
| Meeker | 2.43 |
| Mille Lacs | 2.42 |
| Morrison | 2.41 |
| Mower | 2.41 |
| Murray | 2.36 |
| Nicollet | 2.43 |
| Nobles | 2.35 |
| Norman | 2.31 |
| Olmsted | 2.41 |
| Otter Tail | 2.36 |
| Pennington | 2.32 |
| Pine | 2.42 |
| Pipestone | 2.33 |

1978 CROP WHEAT LOAN AND PURCHASE PROGRAM SUPPLEMENT—Continued

| County | Rate per Bushel |
|---|---|
| Polk | 2.32 |
| Pope | 2.39 |
| Ramsey | 2.43 |
| Red Lake | 2.32 |
| Redwood | 2.39 |
| Renville | 2.41 |
| Rice | 2.43 |
| Rock | 2.33 |
| Roseau | 2.28 |
| Saint Louis | 2.43 |
| Scott | 2.43 |
| Sherburne | 2.43 |
| Sibley | 2.43 |
| Stearns | 2.41 |
| Steele | 2.41 |
| Stevens | 2.37 |
| Swift | 2.37 |
| Todd | 2.39 |
| Traverse | 2.33 |
| Wabasha | 2.42 |
| Wadena | 2.37 |
| Waseca | 2.42 |
| Washington | 2.43 |
| Watonwan | 2.40 |
| Wilkin | 2.33 |
| Winona | 2.40 |
| Wright | 2.43 |
| Yellow Medicine | 2.37 |
| Weighted Avg. for State | 2.44 |
| **MISSISSIPPI** | |
| Harrison | 2.37 |
| Jackson | 2.37 |
| All Other Counties | 2.18 |
| Weighted Avg. for State | 2.28 |
| **MISSOURI** | |
| Adair | 2.17 |
| Andrew | 2.29 |
| Atchison | 2.24 |
| Audrain | 2.22 |
| Barry | 2.19 |
| Barton | 2.23 |
| Bates | 2.27 |
| Benton | 2.23 |
| Bollinger | 2.22 |
| Boone | 2.19 |
| Buchanan | 2.31 |
| Butler | 2.21 |
| Caldwell | 2.28 |
| Callaway | 2.22 |
| Camden | 2.20 |
| Cape Girardeau | 2.23 |
| Carroll | 2.20 |
| Carter | 2.19 |
| Cass | 2.29 |
| Cedar | 2.22 |
| Charlton | 2.23 |
| Christian | 2.16 |
| Clark | 2.18 |
| Clay | 2.29 |
| Clinton | 2.29 |
| Cole | 2.20 |
| Cooper | 2.20 |
| Crawford | 2.22 |
| Dade | 2.21 |
| Dallas | 2.18 |
| Daviess | 2.26 |
| De Kalb | 2.28 |
| Dent | 2.20 |
| Douglas | 2.15 |
| Dunklin | 2.22 |
| Franklin | 2.26 |
| Gasconade | 2.24 |
| Gentry | 2.25 |
| Greene | 2.18 |
| Grundy | 2.23 |
| Harrison | 2.26 |
| Henry | 2.26 |
| Hickory | 2.23 |
| Holt | 2.27 |
| Howard | 2.22 |
| Howell | 2.13 |
| Iron | 2.22 |
| Jackson | 2.31 |
| Jasper | 2.22 |
| Jefferson | 2.25 |
| Johnson | 2.27 |
| Knox | 2.17 |
| Laclede | 2.17 |

1978 CROP WHEAT LOAN AND PURCHASE PROGRAM SUPPLEMENT—Continued

| County | Rate per Bushel |
|---|---|
| Lafayette | 2.29 |
| Lawrence | 2.19 |
| Lewis | 2.19 |
| Lincoln | 2.26 |
| Linn | 2.23 |
| Livingston | 2.25 |
| McDonald | 2.19 |
| Macon | 2.20 |
| Madison | 2.22 |
| Maries | 2.22 |
| Marion | 2.21 |
| Mercer | 2.22 |
| Miller | 2.19 |
| Mississippi | 2.24 |
| Moniteau | 2.20 |
| Monroe | 2.21 |
| Montgomery | 2.24 |
| Morgan | 2.21 |
| New Madrid | 2.24 |
| Newton | 2.19 |
| Nodaway | 2.27 |
| Oregon | 2.17 |
| Osage | 2.21 |
| Ozark | 2.14 |
| Pemiscot | 2.22 |
| Perry | 2.23 |
| Pettis | 2.23 |
| Phelps | 2.20 |
| Pike | 2.24 |
| Platte | 2.29 |
| Polk | 2.21 |
| Pulaski | 2.18 |
| Putnam | 2.19 |
| Ralls | 2.22 |
| Randolph | 2.20 |
| Ray | 2.29 |
| Reynolds | 2.20 |
| Ripley | 2.19 |
| Saint Charles | 2.27 |
| Saint Clair | 2.24 |
| Saint Francois | 2.23 |
| Saint Genevieve | 2.24 |
| Saint Louis | 2.27 |
| Saline | 2.24 |
| Schuyler | 2.15 |
| Scotland | 2.15 |
| Scott | 2.24 |
| Shannon | 2.17 |
| Shelby | 2.20 |
| Stoddard | 2.23 |
| Stone | 2.19 |
| Sullivan | 2.20 |
| Taney | 2.16 |
| Texas | 2.16 |
| Vernon | 2.25 |
| Warren | 2.26 |
| Washington | 2.23 |
| Wayne | 2.21 |
| Webster | 2.17 |
| Worth | 2.25 |
| Wright | 2.17 |
| Weighted Avg. for State | 2.34 |
| **MONTANA** | |
| Beaverhead | 2.13 |
| Big Horn | 2.14 |
| Blaine | 2.15 |
| Broadwater | 2.19 |
| Carbon | 2.15 |
| Carter | 2.15 |
| Cascade | 2.18 |
| Chouteau | 2.18 |
| Custer | 2.14 |
| Daniels | 2.13 |
| Dawson | 2.15 |
| Deer Lodge | 2.20 |
| Fallon | 2.16 |
| Fergus | 2.17 |
| Flathead | 2.21 |
| Gallatin | 2.20 |
| Garfield | 2.13 |
| Glacier | 2.18 |
| Golden Valley | 2.17 |
| Granite | 2.20 |
| Hill | 2.16 |
| Jefferson | 2.20 |
| Judith Basin | 2.17 |
| Lake | 2.20 |
| Lewis and Clark | 2.18 |
| Liberty | 2.17 |

1978 CROP WHEAT LOAN AND PURCHASE PROGRAM SUPPLEMENT—Continued

| County | Rate per Bushel |
|---|---|
| Lincoln | 2.21 |
| McCone | 2.14 |
| Madison | 2.20 |
| Meagher | 2.18 |
| Mineral | 2.20 |
| Missoula | 2.20 |
| Musselshell | 2.15 |
| Park | 2.19 |
| Petroleum | 2.15 |
| Phillips | 2.14 |
| Pondera | 2.18 |
| Powder River | 2.14 |
| Powell | 2.20 |
| Prairie | 2.15 |
| Ravalli | 2.18 |
| Richland | 2.15 |
| Roosevelt | 2.14 |
| Rosebud | 2.13 |
| Sanders | 2.20 |
| Sheridan | 2.14 |
| Silver Bow | 2.20 |
| Stillwater | 2.17 |
| Sweet Grass | 2.18 |
| Teton | 2.18 |
| Toole | 2.17 |
| Treasure | 2.14 |
| Valley | 2.13 |
| Wheatland | 2.18 |
| Wibaux | 2.16 |
| Yellowstone | 2.15 |
| Weighted Avg. for State | 2.26 |
| **NEBRASKA** | |
| Adams | 2.18 |
| Antelope | 2.26 |
| Arthur | 2.09 |
| Banner | 2.06 |
| Blaine | 2.16 |
| Boone | 2.26 |
| Box Butte | 2.06 |
| Boyd | 2.23 |
| Brown | 2.16 |
| Buffalo | 2.19 |
| Burt | 2.31 |
| Butler | 2.28 |
| Cass | 2.30 |
| Cedar | 2.27 |
| Chase | 2.08 |
| Cherry | 2.12 |
| Cheyenne | 2.08 |
| Clay | 2.19 |
| Colfax | 2.28 |
| Cuming | 2.30 |
| Custer | 2.16 |
| Dakota | 2.30 |
| Dawes | 2.06 |
| Dawson | 2.18 |
| Deuel | 2.07 |
| Dixon | 2.27 |
| Dodge | 2.30 |
| Douglas | 2.31 |
| Dundy | 2.08 |
| Fillmore | 2.21 |
| Franklin | 2.16 |
| Frontier | 2.11 |
| Furnas | 2.14 |
| Gage | 2.24 |
| Garden | 2.07 |
| Garfield | 2.20 |
| Gosper | 2.14 |
| Grant | 2.09 |
| Greeley | 2.22 |
| Hall | 2.20 |
| Hamilton | 2.22 |
| Harlan | 2.15 |
| Hayes | 2.10 |
| Hitchcock | 2.10 |
| Holt | 2.23 |
| Hooker | 2.10 |
| Howard | 2.20 |
| Jefferson | 2.23 |
| Johnson | 2.24 |
| Kearney | 2.16 |
| Keith | 2.09 |
| Keya Paha | 2.18 |
| Kimball | 2.06 |
| Knox | 2.26 |
| Lancaster | 2.27 |
| Lincoln | 2.13 |
| Logan | 2.13 |

1978 CROP WHEAT LOAN AND PURCHASE PROGRAM SUPPLEMENT—Continued

| County | Rate per Bushel |
|---|---|
| Loup | 2.16 |
| McPherson | 2.12 |
| Madison | 2.26 |
| Merrick | 2.23 |
| Morrill | 2.06 |
| Nance | 2.24 |
| Nemaha | 2.24 |
| Nuckolls | 2.18 |
| Otoe | 2.27 |
| Pawnee | 2.26 |
| Perkins | 2.08 |
| Phelps | 2.15 |
| Pierce | 2.26 |
| Platte | 2.26 |
| Polk | 2.25 |
| Red Willow | 2.11 |
| Richardson | 2.27 |
| Rock | 2.19 |
| Saline | 2.23 |
| Sarpy | 2.31 |
| Saunders | 2.30 |
| Scotts Bluff | 2.06 |
| Seward | 2.26 |
| Sheridan | 2.07 |
| Sherman | 2.19 |
| Sioux | 2.04 |
| Stanton | 2.28 |
| Thayer | 2.21 |
| Thomas | 2.13 |
| Thurston | 2.30 |
| Valley | 2.19 |
| Washington | 2.31 |
| Wayne | 2.27 |
| Webster | 2.16 |
| Wheeler | 2.22 |
| York | 2.23 |
| Weighted Avg. for State | 2.24 |
| **NEVADA** | |
| All Counties | 2.19 |
| **NEW HAMPSHIRE** | |
| All Counties | 2.18 |
| **NEW JERSEY** | |
| All Counties | 2.22 |
| **NEW MEXICO** | |
| All Counties | 2.24 |
| **New York** | |
| Albany | 2.23 |
| New York City | 2.35 |
| All Other Counties | 2.20 |
| Weighted Avg. for State | 2.30 |
| **NORTH CAROLINA** | |
| All Counties | 2.16 |
| **NORTH DAKOTA** | |
| Adams | 2.15 |
| Barnes | 2.23 |
| Benson | 2.21 |
| Billings | 2.14 |
| Bottineau | 2.15 |
| Bowman | 2.15 |
| Burke | 2.13 |
| Burleigh | 2.19 |
| Cass | 2.30 |
| Cavalier | 2.22 |
| Dickey | 2.23 |
| Divide | 2.12 |
| Dunn | 2.15 |
| Eddy | 2.24 |
| Emmons | 2.22 |
| Foster | 2.25 |
| Golden Valley | 2.14 |
| Grand Forks | 2.29 |
| Grant | 2.17 |
| Griggs | 2.28 |
| Hettinger | 2.15 |
| Kidder | 2.22 |
| La Moure | 2.26 |
| Logan | 2.24 |
| McHenry | 2.16 |
| McIntosh | 2.24 |
| McKenzie | 2.13 |
| McLean | 2.15 |
| Mercer | 2.15 |
| Morton | 2.18 |
| Mountrail | 2.14 |
| Nelson | 2.27 |

1978 CROP WHEAT LOAN AND PURCHASE PROGRAM SUPPLEMENT—Continued

| County | Rate per Bushel |
|---|---|
| Oliver | 2.16 |
| Pembina | 2.26 |
| Pierce | 2.18 |
| Ramsey | 2.23 |
| Ransom | 2.31 |
| Renville | 2.15 |
| Richland | 2.32 |
| Rolette | 2.18 |
| Sargent | 2.31 |
| Sheridan | 2.18 |
| Sioux | 2.17 |
| Slope | 2.15 |
| Stark | 2.15 |
| Steele | 2.28 |
| Stutsman | 2.26 |
| Towner | 2.19 |
| Traill | 2.29 |
| Walsh | 2.28 |
| Ward | 2.14 |
| Wells | 2.22 |
| Williams | 2.13 |
| Weighted Avg. for State | 2.31 |
| **OHIO** | |
| Adams | 2.22 |
| Allen | 2.23 |
| Ashland | 2.26 |
| Ashtabula | 2.28 |
| Athens | 2.25 |
| Auglaize | 2.22 |
| Belmont | 2.26 |
| Brown | 2.22 |
| Butler | 2.22 |
| Carroll | 2.26 |
| Champaign | 2.22 |
| Clark | 2.22 |
| Clermont | 2.22 |
| Clinton | 2.22 |
| Columbiana | 2.27 |
| Coshocton | 2.26 |
| Crawford | 2.25 |
| Cuyahoga | 2.26 |
| Darke | 2.22 |
| Defiance | 2.22 |
| Delaware | 2.25 |
| Erie | 2.25 |
| Fairfield | 2.25 |
| Fayette | 2.22 |
| Franklin | 2.25 |
| Fulton | 2.24 |
| Gallia | 2.22 |
| Geauga | 2.28 |
| Greene | 2.22 |
| Guernsey | 2.26 |
| Hamilton | 2.22 |
| Hancock | 2.25 |
| Hardin | 2.25 |
| Harrison | 2.26 |
| Henry | 2.24 |
| Highland | 2.22 |
| Hocking | 2.25 |
| Holmes | 2.26 |
| Huron | 2.25 |
| Jackson | 2.22 |
| Jefferson | 2.26 |
| Knox | 2.26 |
| Lake | 2.28 |
| Lawrence | 2.22 |
| Licking | 2.26 |
| Logan | 2.22 |
| Lorain | 2.26 |
| Lucas | 2.25 |
| Madison | 2.22 |
| Mahoning | 2.28 |
| Marion | 2.25 |
| Medina | 2.26 |
| Meigs | 2.22 |
| Mercer | 2.22 |
| Miami | 2.22 |
| Monroe | 2.26 |
| Montgomery | 2.22 |
| Morgan | 2.26 |
| Morrow | 2.26 |
| Muskingum | 2.26 |
| Noble | 2.26 |
| Ottawa | 2.25 |
| Paulding | 2.22 |
| Perry | 2.25 |
| Pickaway | 2.25 |
| Pike | 2.22 |

1978 CROP WHEAT LOAN AND PURCHASE PROGRAM SUPPLEMENT—Continued

| County | Rate per Bushel |
|---|---|
| Portage | 2.26 |
| Preble | 2.22 |
| Putnam | 2.24 |
| Richland | 2.26 |
| Ross | 2.25 |
| Sandusky | 2.25 |
| Scioto | 2.22 |
| Seneca | 2.25 |
| Shelby | 2.22 |
| Stark | 2.26 |
| Summit | 2.26 |
| Trumbull | 2.28 |
| Tuscarawas | 2.26 |
| Union | 2.25 |
| Van Wert | 2.22 |
| Vinton | 2.25 |
| Warren | 2.22 |
| Washington | 2.26 |
| Wayne | 2.26 |
| Williams | 2.22 |
| Wood | 2.25 |
| Wyandot | 2.25 |
| Weighted Avg. for State | 2.34 |
| **OKLAHOMA** | |
| Adair | 2.25 |
| Alfalfa | 2.22 |
| Atoka | 2.27 |
| Beaver | 2.17 |
| Beckham | 2.26 |
| Blaine | 2.26 |
| Bryan | 2.27 |
| Caddo | 2.27 |
| Canadian | 2.27 |
| Carter | 2.27 |
| Cherokee | 2.25 |
| Choctaw | 2.27 |
| Cimarron | 2.17 |
| Cleveland | 2.27 |
| Coal | 2.27 |
| Comanche | 2.27 |
| Cotton | 2.27 |
| Craig | 2.24 |
| Creek | 2.26 |
| Custer | 2.26 |
| Delaware | 2.25 |
| Dewey | 2.25 |
| Ellis | 2.20 |
| Garfield | 2.24 |
| Garvin | 2.27 |
| Grady | 2.27 |
| Grant | 2.22 |
| Greer | 2.27 |
| Harmon | 2.27 |
| Harper | 2.17 |
| Haskell | 2.27 |
| Hughes | 2.27 |
| Jackson | 2.27 |
| Jefferson | 2.27 |
| Johnston | 2.27 |
| Kay | 2.23 |
| Kingfisher | 2.26 |
| Kiowa | 2.27 |
| Latimer | 2.27 |
| Le Flore | 2.27 |
| Lincoln | 2.27 |
| Logan | 2.26 |
| Love | 2.27 |
| McClain | 2.27 |
| McCurtain | 2.27 |
| McIntosh | 2.27 |
| Major | 2.24 |
| Marshall | 2.27 |
| Mayes | 2.25 |
| Murray | 2.27 |
| Muskogee | 2.27 |
| Noble | 2.24 |
| Nowata | 2.24 |
| Okfuskee | 2.27 |
| Oklahoma | 2.27 |
| Okmulgee | 2.27 |
| Osage | 2.24 |
| Ottawa | 2.24 |
| Pawnee | 2.24 |
| Payne | 2.26 |
| Pittsburg | 2.27 |
| Pontotoc | 2.27 |
| Pottawatomie | 2.27 |
| Pushmataha | 2.27 |
| Roger Mills | 2.24 |

1978 CROP WHEAT LOAN AND PURCHASE PROGRAM SUPPLEMENT—Continued

| County | Rate per Bushel |
|---|---|
| Rogers | 2.25 |
| Seminole | 2.27 |
| Sequoyah | 2.27 |
| Stephens | 2.27 |
| Texas | 2.17 |
| Tillman | 2.27 |
| Tulsa | 2.25 |
| Wagoner | 2.25 |
| Washington | 2.24 |
| Washita | 2.26 |
| Woods | 2.22 |
| Woodward | 2.22 |
| Weighted Avg. for State | 2.34 |
| **OREGON** | |
| Baker | 2.30 |
| Benton | 2.36 |
| Clackamas | 2.43 |
| Clatsop | 2.60 |
| Columbia | 2.50 |
| Coos | 2.10 |
| Crook | 2.34 |
| Curry | 2.15 |
| Deschutes | 2.34 |
| Douglas | 2.20 |
| Gilliam | 2.39 |
| Grant | 2.34 |
| Harney | 2.20 |
| Hood River | 2.45 |
| Jackson | 2.20 |
| Jefferson | 2.37 |
| Josephine | 2.20 |
| Klamath | 2.28 |
| Lake | 2.25 |
| Lane | 2.34 |
| Lincoln | 2.26 |
| Linn | 2.37 |
| Malheur | 2.20 |
| Marion | 2.41 |
| Morrow | 2.37 |
| Multnomah | 2.50 |
| Polk | 2.39 |
| Sherman | 2.39 |
| Tillamook | 2.43 |
| Umatilla | 2.37 |
| Union | 2.32 |
| Wallowa | 2.30 |
| Wasco | 2.41 |
| Washington | 2.43 |
| Wheeler | 2.36 |
| Yamhill | 2.41 |
| Weighted Avg. for State | 2.47 |
| **PENNSYLVANIA** | |
| Philadelphia | 2.35 |
| All Other Counties | 2.20 |
| Weighted Avg. for State | 2.30 |
| **RHODE ISLAND** | |
| All Counties | 2.10 |
| **SOUTH CAROLINA** | |
| Charleston | 2.35 |
| All Other Counties | 2.16 |
| Weighted Avg. for State | 2.26 |
| **SOUTH DAKOTA** | |
| Aurora | 2.28 |
| Beadle | 2.27 |
| Bennett | 2.16 |
| Bon Homme | 2.29 |
| Brookings | 2.31 |
| Brown | 2.27 |
| Brule | 2.25 |
| Buffalo | 2.25 |
| Butte | 2.13 |
| Campbell | 2.20 |
| Charles Mix | 2.25 |
| Clark | 2.27 |
| Clay | 2.31 |
| Codington | 2.31 |
| Corson | 2.17 |
| Custer | 2.07 |
| Davison | 2.31 |
| Day | 2.31 |
| Deuel | 2.34 |
| Dewey | 2.17 |
| Douglas | 2.27 |
| Edmunds | 2.24 |
| Fall River | 2.05 |
| Faulk | 2.26 |

1978 CROP WHEAT LOAN AND PURCHASE PROGRAM SUPPLEMENT—Continued

| County | Rate per Bushel |
|---|---|
| Grant | 2.34 |
| Gregory | 2.22 |
| Haakon | 2.20 |
| Hamlin | 2.30 |
| Hand | 2.27 |
| Hanson | 2.28 |
| Harding | 2.14 |
| Hughes | 2.23 |
| Hutchinson | 2.30 |
| Hyde | 2.25 |
| Jackson | 2.19 |
| Jerauld | 2.28 |
| Jones | 2.21 |
| Kingsbury | 2.28 |
| Lake | 2.30 |
| Lawrence | 2.13 |
| Lincoln | 2.33 |
| Lyman | 2.22 |
| McCook | 2.31 |
| McPherson | 2.24 |
| Marshall | 2.31 |
| Meade | 2.14 |
| Mellette | 2.20 |
| Miner | 2.29 |
| Minnehaha | 2.32 |
| Moody | 2.32 |
| Pennington | 2.14 |
| Perkins | 2.14 |
| Potter | 2.22 |
| Roberts | 2.33 |
| Sanborn | 2.28 |
| Shannon | 2.12 |
| Spink | 2.27 |
| Stanley | 2.21 |
| Sully | 2.22 |
| Todd | 2.17 |
| Tripp | 2.20 |
| Turner | 2.32 |
| Union | 2.31 |
| Walworth | 2.22 |
| Washabaugh | 2.19 |
| Yankton | 2.29 |
| Ziebach | 2.15 |
| Weighted Avg. for State | 2.33 |
| TENNESSEE | |
| Shelby | 2.28 |
| All Other Counties | 2.17 |
| Weighted Avg. for State | 2.27 |
| TEXAS | |
| Anderson | 2.39 |
| Andrews | 2.25 |
| Archer | 2.30 |
| Armstrong | 2.25 |
| Atascosa | 2.39 |
| Bailey | 2.25 |
| Bandera | 2.35 |
| Bastrop | 2.39 |
| Baylor | 2.29 |
| Bee | 2.47 |
| Bell | 2.39 |
| Bexar | 2.39 |
| Blanco | 2.37 |
| Borden | 2.25 |
| Bosque | 2.36 |
| Bowie | 2.32 |
| Brazos | 2.44 |
| Briscoe | 2.25 |
| Brown | 2.33 |
| Burleson | 2.44 |
| Burnet | 2.37 |
| Caldwell | 2.39 |
| Calhoun | 2.43 |
| Callahan | 2.29 |
| Carson | 2.25 |
| Castro | 2.25 |
| Chambers | 2.49 |
| Cherokee | 2.41 |
| Childress | 2.27 |
| Clay | 2.31 |
| Cochran | 2.25 |
| Coke | 2.26 |
| Coleman | 2.30 |
| Collin | 2.34 |
| Collingsworth | 2.25 |
| Comal | 2.39 |
| Comanche | 2.34 |
| Concho | 2.31 |
| Cooke | 2.32 |

1978 CROP WHEAT LOAN AND PURCHASE PROGRAM SUPPLEMENT—Continued

| County | Rate per Bushel |
|---|---|
| Coryell | 2.38 |
| Cottle | 2.25 |
| Crosby | 2.25 |
| Culberson | 2.25 |
| Dallam | 2.22 |
| Dallas | 2.36 |
| Dawson | 2.25 |
| Deaf Smith | 2.25 |
| Delta | 2.35 |
| Denton | 2.34 |
| DeWitt | 2.41 |
| Dickens | 2.25 |
| Dimmit | 2.33 |
| Donley | 2.25 |
| Eastland | 2.29 |
| Edwards | 2.29 |
| Ellis | 2.36 |
| El Paso | 2.25 |
| Erath | 2.34 |
| Falls | 2.38 |
| Fannin | 2.32 |
| Fisher | 2.26 |
| Floyd | 2.25 |
| Foard | 2.27 |
| Frio | 2.37 |
| Gaines | 2.25 |
| Galveston | 2.49 |
| Garza | 2.25 |
| Gillespie | 2.33 |
| Glasscock | 2.25 |
| Goliad | 2.43 |
| Gonzales | 2.41 |
| Gray | 2.25 |
| Grayson | 2.32 |
| Grimes | 2.44 |
| Guadalupe | 2.39 |
| Hale | 2.25 |
| Hall | 2.25 |
| Hamilton | 2.36 |
| Hansford | 2.22 |
| Hardeman | 2.27 |
| Harris | 2.49 |
| Hartley | 2.22 |
| Haskell | 2.27 |
| Hays | 2.39 |
| Hemphill | 2.22 |
| Henderson | 2.37 |
| Hill | 2.36 |
| Hockley | 2.25 |
| Hood | 2.33 |
| Houston | 2.41 |
| Howard | 2.25 |
| Hudspeth | 2.25 |
| Hunt | 2.35 |
| Hutchinson | 2.22 |
| Irion | 2.27 |
| Jack | 2.31 |
| Jackson | 2.39 |
| Jeff Davis | 2.25 |
| Jefferson | 2.45 |
| Johnson | 2.35 |
| Jones | 2.27 |
| Karnes | 2.43 |
| Kaufman | 2.37 |
| Kendall | 2.37 |
| Kent | 2.25 |
| Kerr | 2.33 |
| Kimble | 2.31 |
| King | 2.25 |
| Kinney | 2.29 |
| Knox | 2.27 |
| Lamar | 2.32 |
| Lamb | 2.25 |
| Lampasas | 2.38 |
| Limestone | 2.38 |
| Lipscomb | 2.22 |
| Live Oak | 2.45 |
| Llano | 2.35 |
| Loving | 2.25 |
| Lubbock | 2.25 |
| Lynn | 2.25 |
| McCulloch | 2.33 |
| McLennan | 2.38 |
| Martin | 2.25 |
| Mason | 2.33 |
| Maverick | 2.29 |
| Medina | 2.35 |
| Menard | 2.31 |
| Midland | 2.25 |

1978 CROP WHEAT LOAN AND PURCHASE PROGRAM SUPPLEMENT—Continued

| County | Rate per Bushel |
|---|---|
| Milam | 2.42 |
| Mills | 2.34 |
| Mitchell | 2.26 |
| Montague | 2.31 |
| Moore | 2.22 |
| Motley | 2.25 |
| Navarro | 2.37 |
| Nolan | 2.26 |
| Nueces | 2.49 |
| Ochiltree | 2.22 |
| Oldham | 2.25 |
| Palo Pinto | 2.31 |
| Parker | 2.33 |
| Parmer | 2.25 |
| Pecos | 2.25 |
| Potter | 2.25 |
| Presidio | 2.25 |
| Randall | 2.25 |
| Real | 2.31 |
| Red River | 2.32 |
| Reeves | 2.25 |
| Refugio | 2.46 |
| Roberts | 2.22 |
| Robertson | 2.41 |
| Rockwall | 2.35 |
| Runnels | 2.29 |
| San Patricio | 2.49 |
| San Saba | 2.34 |
| Schleicher | 2.27 |
| Scurry | 2.26 |
| Shackelford | 2.29 |
| Sherman | 2.22 |
| Somervell | 2.33 |
| Stephens | 2.30 |
| Sterling | 2.26 |
| Stonewall | 2.25 |
| Sutton | 2.27 |
| Swisher | 2.25 |
| Tarrant | 2.36 |
| Taylor | 2.27 |
| Terry | 2.25 |
| Throckmorton | 2.29 |
| Tom Green | 2.28 |
| Travis | 2.39 |
| Uvalde | 2.32 |
| Van Zandt | 2.37 |
| Victoria | 2.43 |
| Waller | 2.44 |
| Ward | 2.25 |
| Wharton | 2.44 |
| Wheeler | 2.25 |
| Wichita | 2.29 |
| Wilbarger | 2.29 |
| Williamson | 2.39 |
| Wilson | 2.41 |
| Wise | 2.32 |
| Yoakum | 2.25 |
| Young | 2.29 |
| Zavala | 2.33 |
| Weighted Avg. for State | 2.37 |
| UTAH | |
| All Counties | 2.19 |
| VERMONT | |
| All Counties | 2.18 |
| VIRGINIA | |
| Chesapeake (Norfolk) | 2.35 |
| All Other Counties | 2.20 |
| Weighted Avg. for State | 2.30 |
| WASHINGTON | |
| Adams | 2.35 |
| Asotin | 2.34 |
| Benton | 2.37 |
| Chelan | 2.37 |
| Clallam | 2.29 |
| Clark | 2.50 |
| Columbia | 2.36 |
| Cowlitz | 2.50 |
| Douglas | 2.35 |
| Ferry | 2.27 |
| Franklin | 2.37 |
| Garfield | 2.36 |
| Grant | 2.35 |
| Grays Harbor | 2.42 |
| Island | 2.31 |
| Jefferson | 2.31 |
| King | 2.50 |
| Kitsap | 2.32 |

1978 CROP WHEAT LOAN AND PURCHASE PROGRAM SUPPLEMENT—Continued

| County | Rate per Bushel |
|---|---|
| Kittitas | 2.39 |
| Klickitat | 2.41 |
| Lewis | 2.45 |
| Lincoln | 2.33 |
| Mason | 2.39 |
| Okanogan | 2.33 |
| Pacific | 2.42 |
| Pend Oreille | 2.22 |
| Pierce | 2.50 |
| San Juan | 2.31 |
| Skagit | 2.39 |
| Skamania | 2.45 |
| Snohomish | 2.44 |
| Spokane | 2.32 |
| Stevens | 2.27 |
| Thurston | 2.44 |
| Wahkiakum | 2.44 |
| Walla Walla | 2.37 |
| Whatcom | 2.36 |
| Whitman | 2.35 |
| Yakima | 2.37 |
| Weighted Avg. for State | 2.45 |
| WEST VIRGINIA | |
| All Counties | 2.21 |
| WISCONSIN | |
| Douglas | 2.38 |
| All Other Counties | 2.16 |
| Weighted Avg. for State | 2.26 |
| WYOMING | |
| All Counties | 2.08 |

(b) Schedule of Premiums and Discounts for 1978—Crop Wheat

| | Cents per Bushel |
|---|---|
| 1. *Class Premiums and Discounts:* | |
| (i) Premiums: Hard Amber Durum, No. 3 or better | +7½ |
| (ii) Discounts: | |
| Durum | −10 |
| Mixed wheat (mixes of classes other than contrasting classes | −3 |
| Mixed wheat (mixtures of contrasting classes) | −10 |
| (iii) Unclassed wheat which includes Red Durum | (1) |
| 2. *Grade Discounts:* | |
| (i) Grade Discounts: | |
| No. 2 | −2 |
| No. 3 | −4 |
| No. 4 | −6 |
| No. 5 | −9 |
| (ii) Special Grade Discounts: | |
| Smut: | |
| Light Smutty | −3 |
| Smutty | −9 |
| Garlic: | |
| Light Garlicky | −10 |
| Garlicky | −20 |
| 3. Weed Control discount (where required by § 1421.24 | −15 |

[1] Unclassed wheat which includes Red Durum is ineligible for loan.

4. *Grade Discounts Sample—on factors of test weight and total damage.*

SAMPLE ON ACCOUNT OF TEST WEIGHT

| Hard Red Spring | | All other classes | |
|---|---|---|---|
| Test weight | Cents per bushel | Weight | Cents per bushel |
| 49 | −13 | 50 | −13 |
| 48 | −17 | 49 | −17 |
| 47 | −21 | 48 | −21 |
| 46 | −25 | 47 | −25 |
| 45 | −29 | 46 | −29 |
| 44 | −35 | 45 | −33 |
| 43 | −41 | 44 | −39 |

SAMPLE ON ACCOUNT OF TEST WEIGHT—Continued

| Hard Red Spring | | All other classes | |
|---|---|---|---|
| Test weight | Cents per bushel | Weight | Cents per bushel |
| 42 | −47 | 43 | −45 |
| 41 | −53 | 42 | −51 |
| 40 | −59 | 41 | −57 |
| | | 40 | −63 |

SAMPLE ON ACCOUNT OF TOTAL DAMAGED KERNELS

| Percent—total damaged kernels: | Cents per bushel |
|---|---|
| 15.1 to 16 | −10 |
| 16.1 to 17 | −12 |
| 17.1 to 18 | −14 |
| 18.1 to 19 | −16 |
| 19.1 to 20 | −18 |
| 20.1 to 21 | −20 |
| 21.1 to 22 | −22 |
| 22.1 to 23 | −24 |
| 23.1 to 24 | −26 |
| 24.1 to 25 | −28 |
| 25.1 to 26 | −30 |
| 26.1 to 27 | −32 |
| 27.1 to 28 | −34 |
| 28.1 to 29 | −36 |
| 29.1 to 30 | −38 |
| Each percent over 30 | −3 |

5. *Premiums for Protein Content*

*Applicable to wheat grading No. 5 or better of the classes Hard Red Winter and Hard Red Spring*

| Percent Protein. | Cents/Bu. |
|---|---|
| Hard Red Winter: | |
| 10.50-10.99 | 0 |
| 11.00-11.49 | ½ |
| 11.50-11.99 | 1 |
| 12.00-12.49 | 2 |
| 12.50-12.99 | 3 |
| 13.00-13.49 | 4½ |
| 13.50-13.99 | 6 |
| 14.00-14.49 | 8 |
| 14.50-14.99 | 10 |
| 15.00 & over | 12 |
| Hard Red Spring: | |
| 11.50-11.99 | 0 |
| 12.00-12.49 | 1 |
| 12.50-12.99 | 2 |
| 13.00-13.49 | 4 |
| 13.50-13.99 | 6 |
| 14.00-14.49 | 9 |
| 14.50-14.99 | 12 |
| 15.00-15.49 | 16 |
| 15.50-15.99 | 20 |
| 16.00-16.49 | 25 |
| 16.50-16.99 | 30 |
| 17.00 & over | 36 |

(c) *Other.* Wheat with quality factors exceeding limits shown in foregoing schedule on wheat that (1) contains in excess of 13.5 percent moisture, (2) is weevily, (3) is musty, (4) sour, and heating shall not be eligible for loan. In the event quantities of wheat exceeding limits shown are delivered in satisfaction of loan obligations, such quantities will be discounted on the basis of the schedule of premiums and discounts as provided by the Kansas City Commodity Office for settlement purposes. Such discounts will be established not later than the time delivery of wheat to CCC begin and will thereafter be adjusted from time to time as COC determines appropriate to reflect changes in market conditions. Producers may obtain schedules of such factors and discounts at county ASCS office approximately one month prior to the loan maturity date.

NOTE:—Premiums and discounts are cumulative except only one grade discount shall be applied.

Signed at Washington, D.C. on January 9, 1979.

STEWART N. SMITH,
*Acting Executive Vice President,*
*Commodity Credit Corporation.*

[FR Doc. 79-1652 Filed 1-17-79; 8:45 am]

---

[3410-05-M]

[CCC Grain Price Support Regulations, 1977 Crop Oat Supplement]

## PART 1421—GRAINS AND SIMILARLY HANDLED COMMODITIES

### Subpart—1978 Crop Oats Loan and Purchase Program

AGENCY: Commodity Credit Corporation, Department of Agriculture.

ACTION: Final rule.

SUMMARY: The purpose of this rule is to set forth the: (1) Final loan and purchase availability dates, (2) maturity dates, and (3) loan and purchase rates and premiums and discounts under which Commodity Credit Corporation (CCC) will extend price support on 1978 crop oats. This rule is needed in order to provide a price support program for oats. This rule will enable eligible oat producers to obtain loans and purchases on their eligible 1978 crop oats.

EFFECTIVE DATE: January 18, 1979.

ADDRESS: Price Support and Loan Division, ASCS, U.S. Department of Agriculture, 3732 South Building, P.O. Box 2415, Washington, D.C. 20013.

FOR FURTHER INFORMATION CONTACT:

Merle Strawderman, ASCS, (202) 447-7973.

SUPPLEMENTARY INFORMATION: A notice of proposed rulemaking was published in the FEDERAL REGISTER on December 21, 1977, 42 FR 56751 stating that the Department of Agriculture proposed to make determinations and issue regulations relative to a loan and purchase program for the 1978 crop of feed grains, including oats. Such determinations included deter-

mining loan and purchase rates and other related program provisions. No recommendations were received concerning the loan and purchase program for oats. After considering applicable factors, it has been determined that the loan and purchase rates for 1978 crop oats on a national average will be $1.03 per bushel.

Producers who wish to secure loans can do so by contacting their local Agricultural Stabilization and Conservation Service Office or Agricultural Service Center.

FINAL RULE

Since warehouse storage charges can now be deducted. The General Regulations Governing Price Support for 1978 and Subsequent Crops, and any amendments thereto and the 1978 and Subsequent Crops Oats Loan and Purchase Regulations, and any amendments thereto in this Part 1421 are further supplemented for the 1978 crop of oats. Accordingly, the regulations in 7 CFR § 1421.270 through § 1421.273 and the title of the subpart are revised to read as provided below effective as to the 1978 crop of oats. The material previously appearing in these sections shall remain in full force and effect as to the crops to which it is applicable.

**Subpart—1978 Crop Oats Loan and Purchase Program**

Sec.
1421.270 Purpose.
1421.271 Availability.
1421.272 Maturity of loans.
1421.273 Warehouse charges.
1421.274 Loans and purchase rates and premiums and discounts.

AUTHORITY: Secs. 4 and 5, 62 Stat. 1070, as amended (15 U.S.C. 714b and c); Secs. 105A, 401, 63 Stat. 1051, as amended (7 U.S.C. 1444c, 1421).

§ 1421.270 Purpose.

This supplement contains additional program provisions which together with the provisions of the General Regulations Governing Price Support for the 1976 and Subsequent Crops, the 1970 and Subsequent Crops Oats Loan and Purchase Program regulations, and any amendments thereto, apply to loans on and purchase of the 1978 crop of oats.

§ 1421.271 Availability.

(a) *Loans.* Producers desiring to participate in the program through loans must request a loan on their 1978 crop of eligible oats on or before March 31, 1979.

(b) *Purchases.* A producer desiring to offer eligible 1978 crop oats not under loan for purchase must execute and deliver to the county ASCS office on or before March 31, 1979, a Purchase Agreement (Form CCC-614) indicating the approximate quantity of 1978-crop oats they will sell to CCC.

§ 1421.272 Maturity of loans.

Loans mature on demand but not later than the last day of the ninth calendar month following the month the loan is disbursed.

§ 1421.273 Warehouse charges.

If storage is not provided for through loan maturity the county office shall deduct storage charges at the daily storage rate for the storing warehouse times the number of days from the date the commodity was received or date through which storage has been provided for to the maturity date.

§ 1421.274 Loan and puchase rates and premiums and discounts.

(a) *Basic loan and purchase rates (counties).* Basic county rates (marketing area in the case of Alaska) for loan and settlement purposes for oats grading U.S. No. 3, containing moisture not in excess of 14 percent moisture are as follows:

1978 CROP OATS LOAN AND PURCHASE PROGRAM SUPPLEMENT

| *County* | *Rate per bushel* |
|---|---|
| ALABAMA | |
| All Counties | $1.13 |
| Alaska* | |
| Delta | 1.01 |
| Fairbanks | 1.00 |
| Glenallen | 1.07 |
| Homer | 1.04 |
| Kenai-Soldontna | 1.09 |
| Palmer | 1.13 |
| Talkeetna | 1.13 |
| Weighted Avg. for State | 1.07 |
| ARIZONA | |
| All Counties | 1.22 |
| ARKANSAS | |
| All Counties | 1.11 |
| CALIFORNIA | |
| All Counties | 1.22 |
| COLORADO | |
| All Counties | 1.12 |
| CONNECTICUT | |
| All Counties | 1.12 |
| DELAWARE | |
| All Counties | 1.12 |
| FLORIDA | |
| All Counties | 1.16 |
| GEORGIA | |
| All Counties | 1.13 |
| IDAHO | |
| All Counties | 1.12 |
| ILLINOIS | |
| Adams | 1.06 |
| Alexander | 1.09 |
| Bond | 1.07 |
| Boone | 1.06 |
| Brown | 1.06 |
| Bureau | 1.06 |
| Calhoun | 1.07 |
| Carroll | 1.06 |
| Cass | 1.06 |
| Champaign | 1.06 |
| Christian | 1.06 |
| Clark | 1.07 |

*In Alaska, loan rates are for Marketing Areas.

1978 CROP OATS LOAN AND PURCHASE PROGRAM SUPPLEMENT—Continued

| *County* | *Rate per bushel* |
|---|---|
| Clay | 1.08 |
| Clinton | 1.08 |
| Coles | 1.06 |
| Cook | 1.08 |
| Crawford | 1.08 |
| Cumberland | 1.07 |
| De Kalb | 1.06 |
| De Witt | 1.06 |
| Douglas | 1.06 |
| Du Page | 1.06 |
| Edgar | 1.06 |
| Edwards | 1.09 |
| Effingham | 1.07 |
| Fayette | 1.07 |
| Ford | 1.06 |
| Franklin | 1.09 |
| Fulton | 1.06 |
| Gallatin | 1.10 |
| Greene | 1.07 |
| Grundy | 1.06 |
| Hamilton | 1.09 |
| Hancock | 1.06 |
| Hardin | 1.10 |
| Henderson | 1.06 |
| Henry | 1.06 |
| Iroquois | 1.06 |
| Jackson | 1.09 |
| Jasper | 1.08 |
| Jefferson | 1.09 |
| Jersey | 1.07 |
| Jo Daviess | 1.06 |
| Johnson | 1.09 |
| Kane | 1.06 |
| Kankakee | 1.06 |
| Kendall | 1.06 |
| Knox | 1.06 |
| Lake | 1.07 |
| La Salle | 1.06 |
| Lawrence | 1.09 |
| Lee | 1.06 |
| Livingston | 1.06 |
| Logan | 1.06 |
| McDonough | 1.06 |
| McHenry | 1.06 |
| McLean | 1.06 |
| Macon | 1.06 |
| Macoupin | 1.07 |
| Madison | 1.08 |
| Marion | 1.08 |
| Marshall | 1.06 |
| Mason | 1.06 |
| Massac | 1.09 |
| Menard | 1.06 |
| Mercer | 1.06 |
| Monroe | 1.09 |
| Montgomery | 1.07 |
| Morgan | 1.06 |
| Moultrie | 1.06 |
| Ogle | 1.06 |
| Peoria | 1.06 |
| Perry | 1.09 |
| Piatt | 1.06 |
| Pike | 1.06 |
| Pope | 1.10 |
| Pulaski | 1.09 |
| Putnam | 1.06 |
| Randolph | 1.09 |
| Richland | 1.08 |
| Rock Island | 1.06 |
| Saint Clair | 1.09 |
| Saline | 1.10 |
| Sangamon | 1.06 |
| Schuyler | 1.06 |
| Scott | 1.06 |
| Shelby | 1.06 |
| Stark | 1.06 |
| Stephenson | 1.06 |
| Tazewell | 1.06 |
| Union | 1.09 |
| Vermilion | 1.06 |
| Wabash | 1.09 |
| Warren | 1.06 |
| Washington | 1.09 |
| Wayne | 1.09 |
| White | 1.09 |
| Whiteside | 1.06 |
| Will | 1.07 |
| Williamson | 1.09 |

1978 CROP OATS LOAN AND PURCHASE PROGRAM SUPPLEMENT—Continued

| County | Rate per bushel |
|---|---|
| Winnebago | 1.06 |
| Woodford | 1.06 |
| Weighted avg. for State | 1.06 |
| **INDIANA** | |
| Adams | 1.12 |
| Allen | 1.12 |
| Bartholomew | 1.12 |
| Benton | 1.10 |
| Blackford | 1.11 |
| Boone | 1.11 |
| Brown | 1.13 |
| Carroll | 1.11 |
| Cass | 1.11 |
| Clark | 1.13 |
| Clay | 1.11 |
| Clinton | 1.11 |
| Crawford | 1.13 |
| Daviess | 1.13 |
| Dearborn | 1.14 |
| Decatur | 1.12 |
| De Kalb | 1.12 |
| Delaware | 1.11 |
| Dubois | 1.13 |
| Elkhart | 1.12 |
| Fayette | 1.11 |
| Floyd | 1.13 |
| Fountain | 1.10 |
| Franklin | 1.13 |
| Fulton | 1.11 |
| Gibson | 1.13 |
| Grant | 1.11 |
| Greene | 1.13 |
| Hamilton | 1.11 |
| Hancock | 1.11 |
| Harrison | 1.13 |
| Hendricks | 1.11 |
| Henry | 1.11 |
| Howard | 1.11 |
| Huntington | 1.11 |
| Jackson | 1.13 |
| Jasper | 1.10 |
| Jay | 1.12 |
| Jefferson | 1.14 |
| Jennings | 1.14 |
| Johnson | 1.11 |
| Knox | 1.13 |
| Kosciusko | 1.11 |
| Lagrange | 1.12 |
| Lake | 1.11 |
| La Porte | 1.12 |
| Lawrence | 1.13 |
| Madison | 1.11 |
| Marion | 1.11 |
| Marshall | 1.11 |
| Martin | 1.13 |
| Miami | 1.11 |
| Monroe | 1.13 |
| Montgomery | 1.11 |
| Morgan | 1.11 |
| Newton | 1.10 |
| Noble | 1.11 |
| Ohio | 1.14 |
| Orange | 1.13 |
| Owen | 1.11 |
| Parke | 1.10 |
| Perry | 1.13 |
| Pike | 1.13 |
| Porter | 1.11 |
| Posey | 1.13 |
| Pulaski | 1.11 |
| Putnam | 1.11 |
| Randolph | 1.12 |
| Ripley | 1.14 |
| Rush | 1.11 |
| Saint Joseph | 1.12 |
| Scott | 1.14 |
| Shelby | 1.11 |
| Spencer | 1.13 |
| Starke | 1.11 |
| Steuben | 1.12 |
| Sullivan | 1.12 |
| Switzerland | 1.14 |
| Tippecanoe | 1.11 |
| Tipton | 1.11 |
| Union | 1.12 |
| Vanderburgh | 1.13 |
| Vermillion | 1.10 |
| Vigo | 1.11 |

1978 CROP OATS LOAN AND PURCHASE PROGRAM SUPPLEMENT—Continued

| County | Rate per bushel |
|---|---|
| Wabash | 1.11 |
| Warren | 1.10 |
| Warrick | 1.13 |
| Washington | 1.13 |
| Wayne | 1.12 |
| Wells | 1.11 |
| White | 1.11 |
| Whitley | 1.11 |
| Weighted avg. for State | 1.11 |
| **IOWA** | |
| Adair | 1.04 |
| Adams | 1.04 |
| Allamakee | 1.01 |
| Appanoose | 1.04 |
| Audubon | 1.02 |
| Benton | 1.04 |
| Black Hawk | 1.03 |
| Boone | 1.02 |
| Bremer | 1.02 |
| Buchanan | 1.03 |
| Buena Vista | 1.02 |
| Bulter | 1.02 |
| Calhoun | 1.02 |
| Carroll | 1.02 |
| Cass | 1.04 |
| Cedar | 1.04 |
| Cerro Gordo | 1.01 |
| Cherokee | 1.02 |
| Chickawaw | 1.02 |
| Clarke | 1.04 |
| Clay | 1.01 |
| Clayton | 1.02 |
| Clinton | 1.04 |
| Crawford | 1.01 |
| Dallas | 1.02 |
| Davis | 1.05 |
| Decatur | 1.04 |
| Delaware | 1.03 |
| Des Moines | 1.04 |
| Dickinson | 1.00 |
| Dubuque | 1.03 |
| Emmet | 1.00 |
| Fayette | 1.02 |
| Floyd | 1.01 |
| Franklin | 1.02 |
| Fremont | 1.04 |
| Greene | 1.02 |
| Grundy | 1.02 |
| Guthrie | 1.02 |
| Hamilton | 1.02 |
| Hancock | 1.01 |
| Hardin | 1.02 |
| Harrison | 1.02 |
| Henry | 1.04 |
| Howard | 1.01 |
| Humboldt | 1.02 |
| Ida | 1.01 |
| Iowa | 1.04 |
| Jackson | 1.04 |
| Jasper | 1.02 |
| Jefferson | 1.04 |
| Johnson | 1.04 |
| Jones | 1.04 |
| Keokuk | 1.04 |
| Kossuth | 1.00 |
| Lee | 1.04 |
| Linn | 1.04 |
| Louisa | 1.04 |
| Lucas | 1.04 |
| Lyon | .99 |
| Madison | 1.04 |
| Mahaska | 1.04 |
| Marion | 1.04 |
| Marshall | 1.02 |
| Mills | 1.04 |
| Mitchell | 1.00 |
| Monona | 1.01 |
| Mónroe | 1.04 |
| Montgomery | 1.04 |
| Muscatine | 1.04 |
| O'Brien | 1.01 |
| Osceola | .99 |
| Page | 1.04 |
| Palo Alto | 1.02 |
| Plymouth | 1.00 |
| Pocahontas | 1.02 |
| Polk | 1.02 |
| Pottawattamie | 1.05 |
| Poweshiek | 1.02 |

1978 CROP OATS LOAN AND PURCHASE PROGRAM SUPPLEMENT—Continued

| County | Rate per bushel |
|---|---|
| Ringgold | 1.04 |
| Sac | 1.02 |
| Scott | 1.04 |
| Shelby | 1.02 |
| Sioux | 1.00 |
| Story | 1.02 |
| Tama | 1.02 |
| Taylor | 1.04 |
| Union | 1.04 |
| Van Buren | 1.04 |
| Wapello | 1.04 |
| Warren | 1.04 |
| Washington | 1.04 |
| Wayne | 1.04 |
| Webster | 1.02 |
| Winnebago | 1.00 |
| Winneshiek | 1.01 |
| Woodbury | 1.00 |
| Worth | 1.00 |
| Wright | 1.02 |
| Weighted avg. for State | 1.02 |
| **KANSAS** | |
| All Counties | 1.08 |
| **KENTUCKY** | |
| All Counties | 1.13 |
| **LOUISIANA** | |
| All Counties | 1.13 |
| **MAINE** | |
| All Counties | 1.12 |
| **MARYLAND** | |
| All Counties | 1.13 |
| **MASSACHUSETTS** | |
| All Counties | 1.12 |
| **MICHIGAN** | |
| Alcona | 1.07 |
| Alger | 1.08 |
| Allegan | 1.09 |
| Alpena | 1.07 |
| Antrim | 1.08 |
| Arenac | 1.07 |
| Baraga | 1.07 |
| Barry | 1.09 |
| Bay | 1.07 |
| Benzie | 1.08 |
| Berrien | 1.10 |
| Branch | 1.10 |
| Calhoun | 1.09 |
| Cass | 1.10 |
| Charlevoix | 1.08 |
| Cheboyan | 1.08 |
| Chippewa | 1.08 |
| Clare | 1.08 |
| Clinton | 1.08 |
| Crawford | 1.07 |
| Delta | 1.07 |
| Dickinson | 1.07 |
| Eaton | 1.08 |
| Emmet | 1.08 |
| Genesee | 1.07 |
| Gladwin | 1.07 |
| Gogebic | 1.07 |
| Grand Traverse | 1.08 |
| Gratiot | 1.08 |
| Hillsdale | 1.10 |
| Houghton | 1.07 |
| Huron | 1.07 |
| Ingham | 1.08 |
| Ionia | 1.08 |
| Iosco | 1.07 |
| Iron | 1.07 |
| Isabella | 1.08 |
| Jackson | 1.09 |
| Kalamazoo | 1.09 |
| Kalkaska | 1.08 |
| Kent | 1.09 |
| Keweenaw | 1.07 |
| Lake | 1.09 |
| Lapeer | 1.07 |
| Leelanau | 1.08 |
| Lenawee | 1.10 |
| Livingston | 1.08 |
| Luce | 1.08 |
| Mackinac | 1.08 |
| Macomb | 1.08 |
| Manistee | 1.09 |

1978 CROP OATS LOAN AND PURCHASE PROGRAM SUPPLEMENT—Continued

| County | Rate per bushel |
|---|---|
| Marquette | 1.07 |
| Mason | 1.09 |
| Mecosta | 1.08 |
| Menominee | 1.07 |
| Midland | 1.07 |
| Missaukee | 1.08 |
| Monroe | 1.10 |
| Montcalm | 1.08 |
| Montmorency | 1.07 |
| Muskegon | 1.09 |
| Newwaygo | 1.09 |
| Oakland | 1.08 |
| Oceana | 1.09 |
| Ogemaw | 1.07 |
| Ontonagon | 1.07 |
| Osceola | 1.08 |
| Oscoda | 1.07 |
| Otsego | 1.08 |
| Ottawa | 1.09 |
| Presque Isle | 1.07 |
| Roscommon | 1.07 |
| Saginaw | 1.07 |
| Saint Clair | 1.08 |
| Saint Joseph | 1.10 |
| Sanilac | 1.07 |
| Schoolcraft | 1.08 |
| Shiawassee | 1.07 |
| Tuscola | 1.07 |
| Van Buren | 1.09 |
| Washtenaw | 1.09 |
| Wayne | 1.09 |
| Wexford | 1.09 |
| Weighted avg. for State | 1.07 |
| MINNESOTA | |
| Aitkin | .99 |
| Anoka | 1.01 |
| Becker | .95 |
| Beltrami | .95 |
| Benton | .99 |
| Big Stone | .96 |
| Blue Earth | .99 |
| Brown | .98 |
| Carlton | 1.01 |
| Carver | 1.00 |
| Cass | .97 |
| Chippewa | .97 |
| Chisago | 1.01 |
| Clay | .94 |
| Clearwater | .95 |
| Cook | 1.01 |
| Cottonwood | .98 |
| Crow Wing | .98 |
| Dakota | 1.00 |
| Dodge | .99 |
| Douglas | .97 |
| Faribault | .99 |
| Fillmore | 1.00 |
| Freeborn | 1.00 |
| Goodhue | .99 |
| Grant | .96 |
| Hennepin | 1.01 |
| Houston | 1.00 |
| Hubbard | .96 |
| Isanti | 1.00 |
| Itasca | .99 |
| Jackson | .98 |
| Kanabec | 1.00 |
| Kandiyohi | .98 |
| Kittson | .92 |
| Koochiching | .96 |
| Lac Qui Parle | .97 |
| Lake | 1.01 |
| Lake of the Woods | .94 |
| Le Sueur | .99 |
| Lincoln | .97 |
| Lyon | .97 |
| McLeod | .99 |
| Mahnomen | .94 |
| Marshall | .93 |
| Martin | .98 |
| Meeker | .99 |
| Mille Lacs | .99 |
| Morrison | .98 |
| Mower | .99 |
| Murray | .97 |
| Nicollet | .99 |
| Nobles | .97 |
| Norman | .93 |

1978 CROP OATS LOAN AND PURCHASE PROGRAM SUPPLEMENT—Continued

| County | Rate per bushel |
|---|---|
| Olmsted | .99 |
| Otter Tail | .96 |
| Pennington | .93 |
| Pine | 1.00 |
| Pipestone | .97 |
| Polk | .93 |
| Pope | .97 |
| Ramsey | 1.01 |
| Red Lake | .93 |
| Redwood | .98 |
| Renville | .98 |
| Rice | .99 |
| Rock | .97 |
| Roseau | .93 |
| Saint Louis | 1.01 |
| Scott | 1.00 |
| Sherburne | 1.00 |
| Sibley | .99 |
| Stearns | .98 |
| Steele | .99 |
| Stevens | .96 |
| Swift | .97 |
| Todd | .97 |
| Traverse | .95 |
| Wabasha | .99 |
| Wadena | .97 |
| Waseca | .99 |
| Washington | 1.01 |
| Watonwan | .98 |
| Wilkin | .95 |
| Winona | 1.00 |
| Wright | 1.00 |
| Yellow Medicine | .97 |
| Weighted avg. for State | .97 |
| MISSISSIPPI | |
| All Counties | 1.13 |
| MISSOURI | |
| All Counties | 1.09 |
| MONTANA | |
| Beaverhead | 1.08 |
| Big Horn | 1.01 |
| Blaine | .98 |
| Broadwater | 1.04 |
| Carbon | 1.03 |
| Carter | .97 |
| Cascade | 1.03 |
| Chouteau | 1.00 |
| Custer | .97 |
| Daniels | .95 |
| Dawson | .94 |
| Deer Lodge | 1.06 |
| Fallon | .95 |
| Fergus | 1.00 |
| Flathead | 1.06 |
| Gallatin | 1.05 |
| Garfield | .97 |
| Glacier | 1.03 |
| Golden Valley | 1.02 |
| Granite | 1.07 |
| Hill | .99 |
| Jefferson | 1.05 |
| Judith Basin | 1.01 |
| Lake | 1.07 |
| Lewis and Clark | 1.05 |
| Liberty | 1.00 |
| Lincoln | 1.08 |
| McCone | .95 |
| Madison | 1.06 |
| Meagher | 1.03 |
| Mineral | 1.08 |
| Missoula | 1.07 |
| Musselshell | 1.01 |
| Park | 1.05 |
| Petroleum | .98 |
| Phillips | .97 |
| Pondera | 1.02 |
| Powder River | .99 |
| Powell | 1.06 |
| Prairie | .96 |
| Ravalli | 1.07 |
| Richland | .94 |
| Roosevelt | .94 |
| Rosebud | .99 |
| Sanders | 1.08 |
| Sheridan | .94 |
| Silver Bow | 1.06 |
| Stillwater | 1.03 |

1978 CROP OATS LOAN AND PURCHASE PROGRAM SUPPLEMENT—Continued

| County | Rate per bushel |
|---|---|
| Sweet Grass | 1.04 |
| Teton | 1.02 |
| Toole | 1.01 |
| Treasure | 1.00 |
| Valley | .96 |
| Wheatland | 1.03 |
| Wibaux | .94 |
| Yellowstone | 1.02 |
| Weighted avg. for State | .98 |
| NEBRASKA | |
| Adams | 1.04 |
| Antelope | 1.01 |
| Arthur | 1.02 |
| Banner | 1.02 |
| Blaine | 1.01 |
| Boone | 1.02 |
| Box Butte | 1.01 |
| Boyd | .99 |
| Brown | 1.00 |
| Buffalo | 1.03 |
| Burt | 1.03 |
| Butler | 1.04 |
| Cass | 1.05 |
| Cedar | 1.01 |
| Chase | 1.05 |
| Cherry | 1.00 |
| Cheyenne | 1.03 |
| Clay | 1.04 |
| Colfax | 1.03 |
| Cuming | 1.03 |
| Custer | 1.02 |
| Dakota | 1.03 |
| Dawes | 1.01 |
| Dawson | 1.03 |
| Deuel | 1.03 |
| Dixon | 1.02 |
| Dodge | 1.04 |
| Douglas | 1.05 |
| Dundy | 1.06 |
| Fillmore | 1.04 |
| Franklin | 1.05 |
| Frontier | 1.04 |
| Furnas | 1.05 |
| Gage | 1.06 |
| Garden | 1.02 |
| Garfield | 1.01 |
| Gosper | 1.04 |
| Grant | 1.01 |
| Greeley | 1.02 |
| Hall | 1.03 |
| Hamilton | 1.03 |
| Harlan | 1.05 |
| Hayes | 1.05 |
| Hitchcock | 1.06 |
| Holt | 1.00 |
| Hooker | 1.01 |
| Howard | 1.02 |
| Jefferson | 1.05 |
| Johnson | 1.06 |
| Kearney | 1.04 |
| Keith | 1.03 |
| Keya Paha | .99 |
| Kimball | 1.03 |
| Knox | 1.00 |
| Lancaster | 1.05 |
| Lincoln | 1.03 |
| Logan | 1.02 |
| Loup | 1.01 |
| McPherson | 1.02 |
| Madison | 1.02 |
| Merrick | 1.02 |
| Morrill | 1.02 |
| Nance | 1.02 |
| Nemaha | 1.06 |
| Nuckolls | 1.05 |
| Otoe | 1.05 |
| Pawnee | 1.06 |
| Perkins | 1.04 |
| Phelps | 1.04 |
| Pierce | 1.01 |
| Platte | 1.02 |
| Polk | 1.03 |
| Red Willow | 1.05 |
| Richardson | 1.06 |
| Rock | 1.00 |
| Saline | 1.05 |
| Sarpy | 1.05 |
| Saunders | 1.05 |

1978 CROP OATS LOAN AND PURCHASE PROGRAM SUPPLEMENT—Continued

| County | Rate per bushel |
|---|---|
| Scotts Bluff | 1.02 |
| Seward | 1.04 |
| Sheridan | 1.01 |
| Sherman | 1.02 |
| Sioux | 1.01 |
| Stanton | 1.02 |
| Thayer | 1.05 |
| Thomas | 1.01 |
| Thurston | 1.03 |
| Valley | 1.02 |
| Washington | 1.04 |
| Wayne | 1.02 |
| Webster | 1.05 |
| Wheeler | 1.01 |
| York | 1.03 |
| Weighted avg. for State | 1.02 |
| NEVADA | |
| All Counties | 1.22 |
| NEW HAMPSHIRE | |
| All Counties | 1.12 |
| NEW JERSEY | |
| All Counties | 1.13 |
| NEW MEXICO | |
| All Counties | 1.20 |
| NEW YORK | |
| All Counties | 1.17 |
| NORTH CAROLINA | |
| All Counties | 1.13 |
| NORTH DAKOTA | |
| Adams | .91 |
| Barnes | .92 |
| Benson | .90 |
| Billings | .89 |
| Bottineau | .88 |
| Bowman | .93 |
| Burke | .89 |
| Burleigh | .90 |
| Cass | .93 |
| Cavalier | .91 |
| Dickey | .92 |
| Divide | .91 |
| Dunn | .89 |
| Eddy | .91 |
| Emmons | .91 |
| Foster | .91 |
| Golden Valley | .91 |
| Grand Forks | .92 |
| Grant | .90 |
| Griggs | .91 |
| Hettinger | .90 |
| Kidder | .91 |
| La Moure | .92 |
| Logan | .91 |
| McHenry | .88 |
| McIntosh | .91 |
| McKenzie | .91 |
| McLean | .88 |
| Mercer | .88 |
| Morton | .89 |
| Mountrail | .89 |
| Nelson | .91 |
| Oliver | .89 |
| Pembina | .92 |
| Pierce | .89 |
| Ramsey | .91 |
| Ransom | .93 |
| Renville | .88 |
| Richland | .94 |
| Rolette | .89 |
| Sargent | .93 |
| Sheridan | .89 |
| Sioux | .90 |
| Slope | .92 |
| Stark | .88 |
| Steele | .92 |
| Stutsman | .92 |
| Towner | .90 |
| Traill | .92 |
| Walsh | .92 |
| Ward | .88 |
| Wells | .90 |
| Williams | .91 |
| Weighted avg. for State | .90 |

1978 CROP OATS LOAN AND PURCHASE PROGRAM SUPPLEMENT—Continued

| County | Rate per bushel |
|---|---|
| OHIO | |
| Adams | 1.14 |
| Allen | 1.12 |
| Ashland | 1.13 |
| Ashtabula | 1.15 |
| Athens | 1.15 |
| Auglaize | 1.12 |
| Belmont | 1.16 |
| Brown | 1.14 |
| Butler | 1.12 |
| Carroll | 1.15 |
| Champaign | 1.13 |
| Clark | 1.13 |
| Clermont | 1.14 |
| Clinton | 1.14 |
| Columbiana | 1.15 |
| Coshocton | 1.14 |
| Crawford | 1.13 |
| Cuyahoga | 1.14 |
| Darke | 1.11 |
| Defiance | 1.11 |
| Delaware | 1.13 |
| Erie | 1.13 |
| Fairfield | 1.13 |
| Fayette | 1.13 |
| Franklin | 1.13 |
| Fulton | 1.12 |
| Gallia | 1.15 |
| Geauga | 1.14 |
| Greene | 1.13 |
| Guernsey | 1.15 |
| Hamilton | 1.13 |
| Hancock | 1.12 |
| Hardin | 1.12 |
| Harrison | 1.15 |
| Henry | 1.12 |
| Highland | 1.14 |
| Hocking | 1.14 |
| Holmes | 1.14 |
| Huron | 1.13 |
| Jackson | 1.14 |
| Jefferson | 1.16 |
| Knox | 1.13 |
| Lake | 1.14 |
| Lawrence | 1.14 |
| Licking | 1.13 |
| Logan | 1.13 |
| Lorain | 1.14 |
| Lucas | 1.12 |
| Madison | 1.13 |
| Mahoning | 1.15 |
| Marion | 1.13 |
| Medina | 1.14 |
| Meigs | 1.15 |
| Mercer | 1.10 |
| Miami | 1.12 |
| Monroe | 1.16 |
| Montgomery | 1.12 |
| Morgan | 1.15 |
| Morrow | 1.13 |
| Muskingum | 1.14 |
| Noble | 1.15 |
| Ottawa | 1.13 |
| Paulding | 1.11 |
| Perry | 1.14 |
| Pickaway | 1.13 |
| Pike | 1.14 |
| Portage | 1.14 |
| Preble | 1.11 |
| Putnam | 1.12 |
| Richland | 1.13 |
| Ross | 1.14 |
| Sandusky | 1.13 |
| Scioto | 1.14 |
| Seneca | 1.13 |
| Shelby | 1.12 |
| Stark | 1.14 |
| Summit | 1.14 |
| Trumbull | 1.15 |
| Tuscarawas | 1.14 |
| Union | 1.13 |
| Van Wert | 1.11 |
| Vinton | 1.14 |
| Warren | 1.13 |
| Washington | 1.16 |
| Wayne | 1.14 |
| Williams | 1.12 |
| Wood | 1.12 |
| Wyandot | 1.13 |
| Weighted avg. for State | 1.13 |

1978 CROP OATS LOAN AND PURCHASE PROGRAM SUPPLEMENT—Continued

| County | Rate per bushel |
|---|---|
| OKLAHOMA | |
| All Counties | 1.14 |
| OREGON | |
| All Countries | 1.18 |
| PENNSYLVANIA | |
| All Counties | 1.17 |
| RHODE ISLAND | |
| All Counties | 1.12 |
| SOUTH CAROLINA | |
| All Counties | 1.13 |
| SOUTH DAKOTA | |
| Aurora | .95 |
| Beadle | .95 |
| Bennett | .96 |
| Bon Homme | .98 |
| Brookings | .96 |
| Brown | .93 |
| Brule | .95 |
| Buffalo | .95 |
| Butte | .94 |
| Campbell | .92 |
| Charles Mix | .96 |
| Clark | .94 |
| Clay | 1.00 |
| Codington | .95 |
| Corson | .92 |
| Custer | .97 |
| Davison | .95 |
| Day | .94 |
| Deuel | .96 |
| Dewey | .94 |
| Douglas | .96 |
| Edmunds | .93 |
| Fall River | .97 |
| Faulk | .94 |
| Grant | .96 |
| Gregory | .96 |
| Haakon | .95 |
| Hamlin | .95 |
| Hand | .95 |
| Hanson | .95 |
| Harding | .93 |
| Hughes | .95 |
| Hutchinson | .97 |
| Hyde | .95 |
| Jackson | .95 |
| Jerauld | .95 |
| Jones | .95 |
| Kingsbury | .95 |
| Lake | .95 |
| Lawrence | .94 |
| Lincoln | .98 |
| Lyman | .95 |
| McCook | .96 |
| McPherson | .92 |
| Marshall | .93 |
| Meade | .94 |
| Mellette | .96 |
| Miner | .95 |
| Minnehaha | .97 |
| Moody | .96 |
| Pennington | .95 |
| Perkins | .92 |
| Potter | .94 |
| Roberts | .94 |
| Sanborn | .95 |
| Shannon | .97 |
| Spink | .94 |
| Stanley | .95 |
| Suly | .95 |
| Todd | .96 |
| Tripp | .96 |
| Turner | .98 |
| Union | 1.00 |
| Walworth | .94 |
| Washabaugh | .96 |
| Yankton | .99 |
| Ziebach | .94 |
| Weighted avg. for State | .96 |
| TENNESSEE | |
| All Counties | 1.13 |
| TEXAS | |
| All Counties | 1.18 |

1978 CROP OATS LOAN AND PURCHASE PROGRAM SUPPLEMENT—Continued

| County | Rate per bushel |
|---|---|
| UTAH | |
| All Counties | 1.20 |
| VERMONT | |
| All Counties | 1.12 |
| VIRGINIA | |
| All Counties | 1.13 |
| WASHINGTON | |
| All Counties | 1.14 |
| WEST VIRGINIA | |
| All Counties | 1.15 |
| WISCONSIN | |
| Adams | 1.04 |
| Ashland | 1.04 |
| Barron | 1.02 |
| Bayfield | 1.03 |
| Brown | 1.03 |
| Buffalo | 1.01 |
| Burnett | 1.01 |
| Calumet | 1.03 |
| Chippewa | 1.03 |
| Clark | 1.03 |
| Columbia | 1.03 |
| Crawford | 1.04 |
| Dane | 1.05 |
| Dodge | 1.04 |
| Door | 1.03 |
| Douglas | 1.01 |
| Dunn | 1.02 |
| Eau Claire | 1.02 |
| Florence | 1.05 |
| Fond du Lac | 1.03 |
| Forest | 1.05 |
| Grant | 1.04 |
| Green | 1.05 |
| Green Lake | 1.04 |
| Iowa | 1.05 |
| Iron | 1.05 |
| Jackson | 1.03 |
| Jefferson | 1.05 |
| Juneau | 1.04 |
| Kenosha | 1.06 |
| Kewaunee | 1.03 |
| LaCrosse | 1.02 |
| Lafayette | 1.05 |
| Langlade | 1.04 |
| Lincoln | 1.04 |
| Manitowac | 1.03 |
| Marathon | 1.04 |
| Marinette | 1.05 |
| Marquette | 1.04 |
| Menominee | 1.04 |
| Milwaukee | 1.06 |
| Monroe | 1.03 |
| Oconto | 1.04 |
| Oneida | 1.05 |
| Outagamie | 1.03 |
| Ozaukee | 1.05 |
| Pepin | 1.01 |
| Pierce | 1.01 |
| Polk | 1.01 |
| Portage | 1.04 |
| Price | 1.04 |
| Racine | 1.06 |
| Richland | 1.03 |
| Rock | 1.05 |
| Rusk | 1.03 |
| Saint Croix | 1.01 |
| Sauk | 1.05 |
| Sawyer | 1.03 |
| Shawano | 1.04 |
| Sheboygan | 1.04 |
| Taylor | 1.04 |
| Trempealeau | 1.02 |
| Vernon | 1.02 |
| Vilas | 1.05 |
| Walworth | 1.05 |
| Washburn | 1.02 |
| Washington | 1.05 |
| Waukesha | 1.06 |
| Waupaca | 1.04 |
| Waushara | 1.04 |
| Winnebago | 1.03 |
| Wood | 1.04 |
| Weighted avg. for State | 1.03 |

1978 CROP OATS LOAN AND PURCHASE PROGRAM SUPPLEMENT—Continued

| County | Rate per bushel |
|---|---|
| WYOMING | |
| All Counties | 1.10 |

(b) *Premiums and discounts:* The basic loan and purchase rates shall be adjusted as applicable by premiums and discounts as follows:

| | Cents per bushel |
|---|---|
| Premiums:[1] | |
| Grade U.S. No. 1 | +2 |
| Grade U.S. No. 2 | +1 |
| Test weight: | |
| Heavy | +1 |
| Extra heavy | +2 |
| Discounts: | |
| Grade U.S. No. 4 on the factor of test weight only but otherwise U.S. No. 3 or better | −3 |
| Grade U.S. No. 4 because of being "badly stained or materially weathered" | −7 |
| Garlicky | −3 |
| Weed control discount (where required by § 1421.24) | −10 |

[1]Premiums shall not be applicable to badly stained or materially weathered oats.

(c) *Other.* Oats with quality factors exceeding limits shown in forgoing schedule or oats that (1) contain in excess of 14 percent moisture, (2) is weevily, (3) is musty, (4) sour, shall not be eligible for loan. In the event quantities of oats exceeding limits shown are delivered in satisfaction of loan obligations, such quantities will be discounted on the basis of the schedule of discounts as provided by the Kansas City Commodity Office for settlement purposes. Such discounts will be established not later than the time delivery of oats to CCC begins and will thereafter be adjusted from time to time as CCC determines appropriate to reflect changes in market conditions.

Producers may obtain schedules of such factors and discounts at county ASCS offices approximately one month prior to the loan maturity date.

Signed at Washington, D.C., on January 9, 1979.

STEWART N. SMITH
*Acting Executive Vice President, Commodity Credit Corporation.*

[FR Doc. 79-1651 Filed 1-17-79; 8:45 am]

---

[3410-05-M]

[CCC Grain Price Support Regulations, 1978 Crop Corn Supplement]

## PART 1421—GRAINS AND SIMILARLY HANDLED COMMODITIES

### Subpart—1978 Crop Corn Loan and Purchase Program

AGENCY: Commodity Credit Corporation, Department of Agriculture.

ACTION: Final rule.

SUMMARY: The purpose of this rule is to set forth the: (1) Final loan and purchase availability dates, (2) maturity dates, and (3) loan and purchase rates and premiums and discounts under which Commodity Credit Corporation (CCC) will extend price support on 1978 crop corn. This rule is needed in order to provide a price support program for corn. This rule will enable eligible corn producers to obtain loans and purchases on their eligible 1978 crop corn.

EFFECTIVE DATE: January 18, 1979.

ADDRESS: Price Support and Loan Division, ASCS, U.S. Department of Agriculture, 3732 South Building, P.O. Box 2415, Washington, D.C. 20013.

FOR FURTHER INFORMATION CONTACT:

Merle Strawderman, ASCS, (202) 447-7973.

SUPPLEMENTARY INFORMATION: A notice of proposed rulemaking was published in the FEDERAL REGISTER on December 21, 1977, 42 FR 56751 stating that the Department of Agriculture proposed to make determinations and issue regulations relative to a loan and purchase program for the 1978 crop of feed grains including corn. Such determinations included determining loan and purchase rates and other related program provisions. Forty-one responses were received: 23 recommendations pertained to loan rates, and 18 dealt with target prices. It has been determined that loan and purchase rates for 1978-crop corn on a national average will be $2.00 per bushel. The final availability date for purchases will be changed to May 31, 1979, the same as for loans.

Producers who wish to secure loans can do so by contacting their local Agricultural Stabilization and Conservation Service Office or Agricultural Service Center.

FINAL RULE

Since storage can now be deducted, The General Regulations Governing Price Support for 1978 and Subsequent Crops, and any amendments thereto and the 1978 and Subsequent Crops Corn Loan and Purchase Regulations, and any amendments thereto in this Part 1421 are further supple-

mented for the 1978 crop of corn. Accordingly, the regulations in 7 CFR § 1421.111 through § 1421.113 and the title of the subpart are revised to read as provided below, effective as to the 1978 crop of corn. The material previously appearing in these sections shall remain in full force and effect as to the crops to which it is applicable.

### Subpart—1978 Crop Corn Loan and Purchase Program

Sec.
1421.111 Availability.
1421.112 Maturity of loans.
1421.113 Warehouse charges.
1421.114 Loans and purchase rates, premiums and discounts.

AUTHORITY: Secs. 4 and 5, 62 Stat. 1070, as amended (15 U.S.C. 714b and c); secs. 105A, 401, 63 Stat. 1051, as amended (7 U.S.C. 1444 c, 1421).

### § 1421.111 Availability.

(a) *Loans.* Producers desiring to participate in the program through loans must request a loan on their 1978 crop of eligible corn on or before May 31, 1979.

(b) *Purchase.* A producer desiring to offer eligible 1978 crop corn not under loan for purchase must execute and deliver to the county ASCS office on or before May 31, 1979, a Purchase Agreement (Form CCC-614) indicating the approximate quantity of 1978 crop corn they will sell to CCC.

### § 1421.112 Maturity of loans.

Loans mature on demand but not later than the last day of the ninth calendar month following the month the loan is disbursed.

### § 1421.113 Warehouse charges.

If storage is not provided for through loan maturity the county office shall deduct storage charges at the daily storage rate for the storing warehouse times the number of days from the date the commodity was received or date through which storage has been provided for to the maturity date.

### § 1421.114 Loans and purchase rates, premiums and discounts.

County basic loan and purchase rates for corn and the schedule of premiums and discounts are contained in this section. Farm stored loans will be made at the basic rate for the county where the corn is stored, adjusted only for the weed control discount where applicable. The rate for warehouse stored loans shall be the basic rate for the county where the corn is stored, adjusted by the premiums and discounts prescribed in paragraph (b) of this section. Notwithstanding § 1421.22(c), settlement for corn delivered from other than approved warehouse storage, shall be based (1) on the basic rate for the county in which the producer's customary delivery point is located, and (2) on the quality and quantity of the corn delivered as shown on the warehouse receipts and accompanying documents issued by an approved warehouse to which delivery is made, or if applicable, the quality and quantity delivered as shown on a form prescribed by CCC for this purpose.

(a) *Basic county rates.* Basic county rates for corn grading No. 2 and containing from 15.1 through 15.5 percent moisture are as follows:

1978 CROP CORN LOAN AND PURCHASE PROGRAM SUPPLEMENT

| *County* | *Rate per Bushel* |
|---|---|
| ALABAMA | |
| All Counties | $2.14 |
| ARIZONA | |
| All Counties | 2.20 |
| ARKANSAS | |
| All Counties | 2.11 |
| CALIFORNIA | |
| All Counties | 2.20 |
| COLORADO | |
| Baca | 2.03 |
| Cheyenne | 2.02 |
| Kiowa | 2.02 |
| Kit Carson | 2.02 |
| Lincoln | 2.05 |
| Logan | 2.04 |
| Phillips | 2.02 |
| Prowers | 2.02 |
| Sedgwick | 2.02 |
| Washington | 2.04 |
| Yuma | 2.01 |
| All Other Counties | 2.06 |
| Weighted Avg. for State | 2.03 |
| CONNECTICUT | |
| All Counties | 2.23 |
| DELAWARE | |
| All Counties | 2.17 |
| FLORIDA | |
| All Counties | 2.15 |
| GEORGIA | |
| All Counties | 2.15 |
| IDAHO | |
| All Counties | 2.17 |
| ILLINOIS | |
| Adams | 2.04 |
| Alexander | 2.08 |
| Bond | 2.06 |
| Boone | 2.04 |
| Brown | 2.05 |
| Bureau | 2.04 |
| Calhoun | 2.06 |
| Carroll | 2.02 |
| Cass | 2.05 |
| Champaign | 2.03 |
| Christian | 2.05 |
| Clark | 2.03 |
| Clay | 2.04 |
| Clinton | 2.07 |
| Coles | 2.03 |
| Cook | 2.08 |
| Crawford | 2.03 |
| Cumberland | 2.03 |
| De Kalb | 2.04 |
| De Witt | 2.03 |
| Douglas | 2.03 |
| Du Page | 2.07 |
| Edgar | 2.03 |
| Edwards | 2.05 |
| Effingham | 2.04 |
| Fayette | 2.05 |
| Ford | 2.04 |
| Franklin | 2.06 |
| Fulton | 2.05 |
| Gallatin | 2.06 |

1978 CROP CORN LOAN AND PURCHASE PROGRAM SUPPLEMENT—Continued

| *County* | *Rate per Bushel* |
|---|---|
| Greene | 2.06 |
| Grundy | 2.05 |
| Hamilton | 2.05 |
| Hancock | 2.04 |
| Hardin | 2.07 |
| Henderson | 2.04 |
| Henry | 2.04 |
| Iroquois | 2.04 |
| Jackson | 2.07 |
| Jasper | 2.03 |
| Jefferson | 2.07 |
| Jersey | 2.06 |
| Jo Daviess | 2.01 |
| Johnson | 2.07 |
| Kane | 2.06 |
| Kankakee | 2.05 |
| Kendall | 2.05 |
| Knox | 2.05 |
| Lake | 2.07 |
| La Salle | 2.04 |
| Lawrence | 2.04 |
| Lee | 2.04 |
| Livingston | 2.04 |
| Logan | 2.04 |
| McDonough | 2.05 |
| McHenry | 2.06 |
| McLean | 2.03 |
| Macon | 2.04 |
| Macoupin | 2.06 |
| Madison | 2.08 |
| Marion | 2.05 |
| Marshall | 2.04 |
| Mason | 2.05 |
| Massac | 2.08 |
| Menard | 2.04 |
| Mercer | 2.03 |
| Monroe | 2.09 |
| Montgomery | 2.05 |
| Morgan | 2.05 |
| Moultrie | 2.03 |
| Ogle | 2.03 |
| Peoria | 2.05 |
| Perry | 2.08 |
| Piatt | 2.03 |
| Pike | 2.05 |
| Pope | 2.07 |
| Pulaski | 2.08 |
| Putnam | 2.04 |
| Randolph | 2.08 |
| Richland | 2.04 |
| Rock Island | 2.03 |
| St. Clair | 2.09 |
| Saline | 2.06 |
| Sangamon | 2.04 |
| Schuyler | 2.05 |
| Scott | 2.05 |
| Shelby | 2.04 |
| Stark | 2.05 |
| Stephenson | 2.01 |
| Tazewell | 2.04 |
| Union | 2.07 |
| Vermilion | 2.03 |
| Wabash | 2.05 |
| Warren | 2.05 |
| Washington | 2.09 |
| Wayne | 2.05 |
| White | 2.05 |
| Whiteside | 2.03 |
| Will | 2.07 |
| Williamson | 2.06 |
| Winnebago | 2.02 |
| Woodford | 2.04 |
| Weighted Avg. for State | 2.04 |
| INDIANA | |
| Adams | 2.02 |
| Allen | 2.02 |
| Bartholomew | 2.03 |
| Benton | 2.04 |
| Blackford | 2.01 |
| Boone | 1.99 |
| Brown | 2.03 |
| Carroll | 2.02 |
| Cass | 2.04 |
| Clark | 2.06 |
| Clay | 2.01 |
| Clinton | 2.00 |
| Crawford | 2.06 |
| Daviess | 2.05 |

1978 CROP CORN LOAN AND PURCHASE PROGRAM SUPPLEMENT—Continued

| County | Rate per Bushel |
|---|---|
| Dearborn | 2.06 |
| Decatur | 2.03 |
| De Kalb | 2.02 |
| Delaware | 2.00 |
| Dubois | 2.05 |
| Elkhart | 2.04 |
| Fayette | 2.02 |
| Floyd | 2.06 |
| Fountain | 2.01 |
| Franklin | 2.05 |
| Fulton | 2.04 |
| Gibson | 2.06 |
| Grant | 2.01 |
| Greene | 2.03 |
| Hamilton | 1.99 |
| Harrison | 2.06 |
| Hancock | 2.00 |
| Hendricks | 2.00 |
| Henry | 2.00 |
| Howard | 2.02 |
| Huntington | 2.01 |
| Jackson | 2.05 |
| Jasper | 2.05 |
| Jay | 2.02 |
| Jefferson | 2.06 |
| Jennings | 2.05 |
| Johnson | 2.01 |
| Knox | 2.05 |
| Kosciusko | 2.04 |
| LaGrange | 2.02 |
| Lake | 2.07 |
| La Porte | 2.07 |
| Lawrence | 2.05 |
| Madison | 1.99 |
| Marion | 2.00 |
| Marshall | 2.05 |
| Martin | 2.05 |
| Miami | 2.02 |
| Monroe | 2.03 |
| Montgomery | 2.01 |
| Morgan | 2.01 |
| Newton | 2.05 |
| Noble | 2.02 |
| Ohio | 2.06 |
| Orange | 2.05 |
| Owen | 2.01 |
| Parke | 2.01 |
| Perry | 2.06 |
| Pike | 2.05 |
| Porter | 2.07 |
| Posey | 2.06 |
| Pulaski | 2.05 |
| Putnam | 2.00 |
| Randolph | 2.01 |
| Ripley | 2.05 |
| Rush | 2.01 |
| St. Joseph | 2.05 |
| Scott | 2.06 |
| Shelby | 2.01 |
| Spencer | 2.06 |
| Starke | 2.05 |
| Steuben | 2.02 |
| Sullivan | 2.03 |
| Switzerland | 2.06 |
| Tippecanoe | 2.02 |
| Tipton | 2.00 |
| Union | 2.03 |
| Vanderburgh | 2.06 |
| Vermilion | 2.02 |
| Vigo | 2.02 |
| Wabash | 2.02 |
| Warren | 2.02 |
| Warrick | 2.06 |
| Washington | 2.06 |
| Wayne | 2.01 |
| Wells | 2.01 |
| White | 2.04 |
| Whitley | 2.02 |
| Weighted Avg. for State | 2.03 |
| **IOWA** | |
| Adair | 1.97 |
| Adams | 2.00 |
| Allamakee | 1.95 |
| Appanoose | 2.00 |
| Audubon | 1.97 |
| Benton | 1.98 |
| Black Hawk | 1.98 |
| Boone | 1.96 |

1978 CROP CORN LOAN AND PURCHASE PROGRAM SUPPLEMENT—Continued

| County | Rate per Bushel |
|---|---|
| Bremer | 1.97 |
| Buchanan | 1.98 |
| Buena Vista | 1.93 |
| Butler | 1.96 |
| Calhoun | 1.94 |
| Carroll | 1.97 |
| Cass | 1.98 |
| Cedar | 2.01 |
| Cerro Gordo | 1.95 |
| Cherokee | 1.93 |
| Chickasaw | 1.96 |
| Clarke | 1.99 |
| Clay | 1.91 |
| Clayton | 1.97 |
| Clinton | 2.01 |
| Crawford | 1.98 |
| Dallas | 1.96 |
| Davis | 2.01 |
| Decatur | 2.01 |
| Delaware | 1.98 |
| Des Moines | 2.01 |
| Dickinson | 1.89 |
| Dubuque | 1.99 |
| Emmet | 1.89 |
| Fayette | 1.97 |
| Floyd | 1.96 |
| Franklin | 1.95 |
| Fremont | 2.01 |
| Greene | 1.95 |
| Grundy | 1.97 |
| Guthrie | 1.96 |
| Hamilton | 1.95 |
| Hancock | 1.94 |
| Hardin | 1.97 |
| Harrison | 1.99 |
| Henry | 2.01 |
| Howard | 1.94 |
| Humboldt | 1.92 |
| Ida | 1.95 |
| Iowa | 1.99 |
| Jackson | 2.00 |
| Jasper | 1.98 |
| Jefferson | 2.00 |
| Johnson | 2.00 |
| Jones | 1.99 |
| Keokuk | 2.00 |
| Kossuth | 1.91 |
| Lee | 2.01 |
| Linn | 1.98 |
| Louisa | 2.01 |
| Lucas | 1.99 |
| Lyon | 1.90 |
| Madison | 1.97 |
| Mahaska | 1.99 |
| Marion | 1.98 |
| Marshall | 1.98 |
| Mills | 2.00 |
| Mitchell | 1.94 |
| Monona | 1.98 |
| Monroe | 1.99 |
| Montgomery | 2.00 |
| Muscatine | 2.01 |
| O'Brien | 1.92 |
| Osceola | 1.90 |
| Page | 2.02 |
| Palo Alto | 1.90 |
| Plymouth | 1.94 |
| Pocahontas | 1.93 |
| Polk | 1.97 |
| Pottawattamie | 2.00 |
| Poweshiek | 1.98 |
| Ringgold | 2.02 |
| Sac | 1.95 |
| Scott | 2.01 |
| Shelby | 1.99 |
| Sioux | 1.92 |
| Story | 1.98 |
| Tama | 1.98 |
| Taylor | 2.02 |
| Union | 2.00 |
| Van Buren | 2.01 |
| Wapello | 2.00 |
| Warren | 1.98 |
| Washington | 2.00 |
| Wayne | 2.00 |
| Webster | 1.94 |
| Winnebago | 1.93 |
| Winneshiek | 1.95 |
| Woodbury | 1.96 |

1978 CROP CORN LOAN AND PURCHASE PROGRAM SUPPLEMENT—Continued

| County | Rate per Bushel |
|---|---|
| Worth | 1.94 |
| Wright | 1.94 |
| Weighted Avg. for State | 1.97 |
| **KANSAS** | |
| Allen | 2.05 |
| Anderson | 2.06 |
| Atchison | 2.07 |
| Barber | 1.99 |
| Barton | 1.97 |
| Bourbon | 2.07 |
| Brown | 2.05 |
| Butler | 2.01 |
| Chase | 2.01 |
| Chautauqua | 2.01 |
| Cherokee | 2.07 |
| Cheyenne | 1.95 |
| Clark | 1.99 |
| Clay | 1.99 |
| Cloud | 1.99 |
| Coffey | 2.04 |
| Comanche | 1.99 |
| Cowley | 2.00 |
| Crawford | 2.07 |
| Decatur | 1.97 |
| Dickinson | 1.99 |
| Doniphan | 2.05 |
| Douglas | 2.07 |
| Edwards | 1.98 |
| Elk | 2.01 |
| Ellis | 1.97 |
| Ellsworth | 1.98 |
| Finney | 1.98 |
| Ford | 1.99 |
| Franklin | 2.06 |
| Geary | 2.01 |
| Gove | 1.96 |
| Graham | 1.96 |
| Grant | 1.99 |
| Gray | 1.99 |
| Greeley | 1.97 |
| Greenwood | 2.02 |
| Hamilton | 1.98 |
| Harper | 1.99 |
| Harvey | 1.99 |
| Haskell | 1.99 |
| Hodgeman | 1.98 |
| Jackson | 2.05 |
| Jefferson | 2.07 |
| Jewell | 1.98 |
| Johnson | 2.08 |
| Kearny | 1.98 |
| Kingman | 1.99 |
| Kiowa | 1.98 |
| Labette | 2.03 |
| Lane | 1.97 |
| Leavenworth | 2.08 |
| Lincoln | 1.98 |
| Linn | 2.07 |
| Logan | 1.96 |
| Lyon | 2.03 |
| McPherson | 1.99 |
| Marion | 1.99 |
| Marshall | 2.03 |
| Meade | 2.00 |
| Miami | 2.07 |
| Mitchell | 1.98 |
| Montgomery | 2.02 |
| Morris | 2.01 |
| Morton | 2.00 |
| Nemaha | 2.04 |
| Neosho | 2.05 |
| Ness | 1.97 |
| Norton | 1.98 |
| Osage | 2.04 |
| Osborne | 1.97 |
| Ottawa | 1.99 |
| Pawnee | 1.98 |
| Phillips | 1.98 |
| Pottawatomie | 2.04 |
| Pratt | 1.98 |
| Rawlins | 1.96 |
| Reno | 1.98 |
| Republic | 2.00 |
| Rice | 1.98 |
| Riley | 2.03 |
| Rooks | 1.97 |
| Rush | 1.97 |
| Russell | 1.97 |

1978 CROP CORN LOAN AND PURCHASE PROGRAM SUPPLEMENT—Continued

| County | Rate per Bushel |
|---|---|
| Saline | 1.99 |
| Scott | 1.97 |
| Sedgwick | 2.00 |
| Seward | 2.00 |
| Shawnee | 2.05 |
| Sheridan | 1.96 |
| Sherman | 1.96 |
| Smith | 1.98 |
| Stafford | 1.98 |
| Stanton | 1.99 |
| Stevens | 2.00 |
| Sumner | 2.00 |
| Thomas | 1.96 |
| Trego | 1.96 |
| Wabaunsee | 2.03 |
| Wallace | 1.96 |
| Washington | 2.02 |
| Wichita | 1.97 |
| Wilson | 2.03 |
| Woodson | 2.04 |
| Wyandotte | 2.08 |
| Weighted Avg. for State | 1.99 |
| KENTUCKY | |
| Ballard | 2.08 |
| Boone | 2.07 |
| Bracken | 2.09 |
| Breckinridge | 2.08 |
| Bullitt | 2.09 |
| Campbell | 2.07 |
| Carroll | 2.08 |
| Crittenden | 2.08 |
| Daviess | 2.08 |
| Gallatin | 2.08 |
| Hancock | 2.08 |
| Henderson | 2.08 |
| Jefferson | 2.08 |
| Kenton | 2.07 |
| Lewis | 2.09 |
| Livingston | 2.08 |
| McCracken | 2.08 |
| Mason | 2.09 |
| Meade | 2.08 |
| Oldham | 2.08 |
| Trimble | 2.08 |
| Union | 2.08 |
| All Other Counties | 2.10 |
| Weighted Avg. for State | 2.09 |
| LOUISIANA | |
| All Counties | 2.13 |
| MAINE | |
| All Counties | 2.23 |
| MARYLAND | |
| All Counties | 2.17 |
| MASSACHUSETTS | |
| All Counties | 2.23 |
| MICHIGAN | |
| Alcona | 2.00 |
| Alger | 1.98 |
| Allegan | 2.00 |
| Alpena | 2.00 |
| Antrim | 2.00 |
| Arenac | 1.99 |
| Baraga | 1.98 |
| Barry | 1.99 |
| Bay | 1.98 |
| Benzie | 2.00 |
| Berrien | 2.05 |
| Branch | 2.02 |
| Calhoun | 2.00 |
| Cass | 2.03 |
| Charlevoix | 2.00 |
| Cheboygan | 2.00 |
| Chippewa | 1.98 |
| Clare | 1.98 |
| Clinton | 1.99 |
| Crawford | 2.00 |
| Delta | 1.98 |
| Dickinson | 1.98 |
| Eaton | 2.00 |
| Emmet | 2.00 |
| Genesee | 2.00 |
| Gladwin | 1.98 |
| Gogebic | 1.98 |
| Grand Traverse | 2.00 |
| Gratiot | 1.97 |

1978 CROP CORN LOAN AND PURCHASE PROGRAM SUPPLEMENT—Continued

| County | Rate per Bushel |
|---|---|
| Hillsdale | 2.03 |
| Houghton | 1.98 |
| Huron | 1.98 |
| Ingham | 2.00 |
| Ionia | 1.99 |
| Iosco | 1.99 |
| Iron | 1.98 |
| Isabella | 1.97 |
| Jackson | 2.01 |
| Kalamazoo | 2.01 |
| Kalkaska | 2.00 |
| Kent | 1.98 |
| Keweenaw | 1.98 |
| Lake | 1.99 |
| Lapeer | 2.00 |
| Leelanau | 2.00 |
| Lenawee | 2.04 |
| Livingston | 2.01 |
| Luce | 1.98 |
| Mackinac | 1.98 |
| Macomb | 2.01 |
| Manistee | 1.99 |
| Marquette | 1.98 |
| Mason | 1.99 |
| Mecosta | 1.97 |
| Menominee | 1.98 |
| Midland | 1.97 |
| Missaukee | 1.99 |
| Monroe | 2.05 |
| Montcalm | 1.97 |
| Montmorency | 2.00 |
| Muskegon | 1.99 |
| Newaygo | 1.98 |
| Oakland | 2.01 |
| Oceana | 1.99 |
| Ogemaw | 1.99 |
| Ontonagon | 1.98 |
| Osceola | 1.98 |
| Oscoda | 2.00 |
| Otsego | 2.00 |
| Ottawa | 1.99 |
| Presque Isle | 2.00 |
| Roscommon | 1.99 |
| Saginaw | 1.97 |
| St. Clair | 2.00 |
| St. Joseph | 2.02 |
| Sanilac | 1.98 |
| Schoolcraft | 1.98 |
| Shiawassee | 1.99 |
| Tuscola | 1.97 |
| Van Buren | 2.01 |
| Washtenaw | 2.02 |
| Wayne | 2.03 |
| Wexford | 1.99 |
| Weighted Avg. for State | 2.00 |
| MINNESOTA | |
| Aitkin | 1.91 |
| Anoka | 1.91 |
| Becker | 1.89 |
| Beltrami | 1.89 |
| Benton | 1.91 |
| Big Stone | 1.86 |
| Blue Earth | 1.90 |
| Brown | 1.89 |
| Carlton | 1.91 |
| Carver | 1.91 |
| Cass | 1.89 |
| Chippewa | 1.89 |
| Chisago | 1.91 |
| Clay | 1.89 |
| Clearwater | 1.89 |
| Cook | 1.91 |
| Cottonwood | 1.87 |
| Crow Wing | 1.90 |
| Dakota | 1.91 |
| Dodge | 1.91 |
| Douglas | 1.90 |
| Faribault | 1.89 |
| Fillmore | 1.93 |
| Freeborn | 1.90 |
| Goodhue | 1.91 |
| Grant | 1.89 |
| Hennepin | 1.91 |
| Houston | 1.93 |
| Hubbard | 1.89 |
| Isanti | 1.91 |
| Itasca | 1.91 |
| Jackson | 1.88 |

1978 CROP CORN LOAN AND PURCHASE PROGRAM SUPPLEMENT—Continued

| County | Rate per Bushel |
|---|---|
| Knabec | 1.91 |
| Kandiyohi | 1.90 |
| Kittson | 1.89 |
| Koochiching | 1.91 |
| Lac Qui Parle | 1.86 |
| Lake | 1.91 |
| Lake of the Woods | 1.89 |
| Le Sueur | 1.91 |
| Lincoln | 1.85 |
| Lyon | 1.86 |
| McLeod | 1.91 |
| Mahnomen | 1.89 |
| Marshall | 1.89 |
| Martin | 1.88 |
| Meeker | 1.91 |
| Mille Lacs | 1.91 |
| Morrison | 1.90 |
| Mower | 1.92 |
| Murray | 1.87 |
| Nicollet | 1.90 |
| Nobles | 1.88 |
| Norman | 1.89 |
| Olmsted | 1.92 |
| Otter Tail | 1.89 |
| Pennington | 1.89 |
| Pine | 1.91 |
| Pipestone | 1.87 |
| Polk | 1.89 |
| Pope | 1.89 |
| Ramsey | 1.91 |
| Red Lake | 1.89 |
| Redwood | 1.88 |
| Renville | 1.90 |
| Rice | 1.91 |
| Rock | 1.88 |
| Roseau | 1.89 |
| St. Louis | 1.91 |
| Scott | 1.91 |
| Sherburne | 1.91 |
| Sibley | 1.91 |
| Stearns | 1.90 |
| Steele | 1.90 |
| Stevens | 1.88 |
| Swift | 1.88 |
| Todd | 1.90 |
| Traverse | 1.86 |
| Wabasha | 1.91 |
| Wadena | 1.90 |
| Waseca | 1.90 |
| Washington | 1.91 |
| Watonwan | 1.88 |
| Wilkin | 1.88 |
| Winona | 1.92 |
| Wright | 1.91 |
| Yellow Medicine | 1.87 |
| Weighted Avg. for State | 1.90 |
| MISSISSIPPI | |
| All Counties | 2.13 |
| MISSOURI | |
| Adair | 2.03 |
| Andrew | 2.07 |
| Atchison | 2.04 |
| Audrain | 2.05 |
| Barry | 2.10 |
| Barton | 2.06 |
| Bates | 2.07 |
| Benton | 2.05 |
| Bollinger | 2.07 |
| Boone | 2.04 |
| Buchanan | 2.08 |
| Butler | 2.08 |
| Caldwell | 2.08 |
| Callaway | 2.05 |
| Camden | 2.06 |
| Cape Girardeau | 2.07 |
| Carroll | 2.07 |
| Carter | 2.08 |
| Cass | 2.08 |
| Cedar | 2.07 |
| Chariton | 2.06 |
| Christian | 2.10 |
| Clark | 2.02 |
| Clay | 2.08 |
| Clinton | 2.08 |
| Cole | 2.05 |
| Cooper | 2.03 |
| Crawford | 2.07 |
| Dade | 2.07 |

1978 CROP CORN LOAN AND PURCHASE PROGRAM SUPPLEMENT—Continued

| County | Rate per Bushel |
|---|---|
| Dallas | 2.08 |
| Daviess | 2.06 |
| De Kalb | 2.06 |
| Dent | 2.08 |
| Douglas | 2.12 |
| Dunklin | 2.08 |
| Franklin | 2.07 |
| Gasconade | 2.05 |
| Gentry | 2.04 |
| Greene | 2.08 |
| Grundy | 2.05 |
| Harrison | 2.04 |
| Henry | 2.06 |
| Hickory | 2.06 |
| Holt | 2.05 |
| Howard | 2.04 |
| Howell | 2.12 |
| Iron | 2.07 |
| Jackson | 2.08 |
| Jasper | 2.07 |
| Jefferson | 2.08 |
| Johnson | 2.08 |
| Knox | 2.03 |
| Laclede | 2.08 |
| Lafayette | 2.08 |
| Lawrence | 2.08 |
| Lewis | 2.03 |
| Lincoln | 2.06 |
| Linn | 2.05 |
| Livingston | 2.07 |
| McDonald | 2.09 |
| Macon | 2.04 |
| Madison | 2.07 |
| Maries | 2.06 |
| Marion | 2.03 |
| Mercer | 2.03 |
| Miller | 2.06 |
| Mississippi | 2.08 |
| Moniteau | 2.05 |
| Monroe | 2.04 |
| Montgomery | 2.05 |
| Morgan | 2.05 |
| New Madrid | 2.08 |
| Newton | 2.08 |
| Nodaway | 2.05 |
| Oregon | 2.10 |
| Osage | 2.05 |
| Ozark | 2.12 |
| Pemiscot | 2.08 |
| Perry | 2.07 |
| Pettis | 2.04 |
| Phelps | 2.08 |
| Pike | 2.05 |
| Platte | 2.08 |
| Polk | 2.08 |
| Pulaski | 2.08 |
| Putnam | 2.02 |
| Ralls | 2.04 |
| Randolph | 2.04 |
| Ray | 2.08 |
| Reynolds | 2.08 |
| Ripley | 2.08 |
| St. Charles | 2.06 |
| St. Clair | 2.06 |
| St. Francois | 2.07 |
| Ste. Genevieve | 2.07 |
| St. Louis | 2.08 |
| Saline | 2.06 |
| Schuyler | 2.03 |
| Scotland | 2.02 |
| Scott | 2.08 |
| Shannon | 2.10 |
| Shelby | 2.03 |
| Stoddard | 2.08 |
| Stone | 2.10 |
| Sullivan | 2.04 |
| Taney | 2.12 |
| Texas | 2.10 |
| Vernon | 2.06 |
| Warren | 2.06 |
| Washington | 2.07 |
| Wayne | 2.08 |
| Webster | 2.10 |
| Worth | 2.04 |
| Wright | 2.10 |
| Weighted Avg. for state | 2.06 |
| **MONTANA** | |
| All Counties | 2.08 |

1978 CROP CORN LOAN AND PURCHASE PROGRAM SUPPLEMENT—Continued

| County | Rate per Bushel |
|---|---|
| **NEBRASKA** | |
| Adams | 1.96 |
| Antelope | 1.96 |
| Arthur | 1.96 |
| Banner | 2.01 |
| Blaine | 1.92 |
| Boone | 1.96 |
| Box Butte | 1.99 |
| Boyd | 1.93 |
| Brown | 1.92 |
| Buffalo | 1.93 |
| Burt | 2.00 |
| Butler | 1.99 |
| Cass | 2.00 |
| Cedar | 1.94 |
| Chase | 1.95 |
| Cherry | 1.94 |
| Cheyenne | 1.99 |
| Clay | 1.98 |
| Colfax | 1.99 |
| Cuming | 1.98 |
| Custer | 1.92 |
| Dakota | 1.94 |
| Dawes | 1.99 |
| Dawson | 1.92 |
| Deuel | 1.99 |
| Dixon | 1.94 |
| Dodge | 1.99 |
| Douglas | 2.01 |
| Dundy | 1.94 |
| Fillmore | 1.99 |
| Franklin | 1.96 |
| Frontier | 1.94 |
| Furnas | 1.95 |
| Gage | 2.02 |
| Garden | 1.97 |
| Garfield | 1.93 |
| Gosper | 1.94 |
| Grant | 1.96 |
| Greeley | 1.95 |
| Hall | 1.95 |
| Hamilton | 1.95 |
| Harlan | 1.96 |
| Hayes | 1.94 |
| Hitchcock | 1.94 |
| Holt | 1.93 |
| Hooker | 1.94 |
| Howard | 1.95 |
| Jefferson | 2.01 |
| Johnson | 2.02 |
| Kearney | 1.95 |
| Keith | 1.97 |
| Keya Paha | 1.92 |
| Kimball | 2.01 |
| Knox | 1.94 |
| Lancaster | 2.00 |
| Lincoln | 1.94 |
| Logan | 1.93 |
| Loup | 1.92 |
| McPherson | 1.94 |
| Madison | 1.96 |
| Merrick | 1.95 |
| Morrill | 2.01 |
| Nance | 1.96 |
| Nemaha | 2.02 |
| Nuckolls | 1.98 |
| Otoe | 2.01 |
| Pawnee | 2.03 |
| Perkins | 1.96 |
| Phelps | 1.95 |
| Pierce | 1.96 |
| Platte | 1.97 |
| Polk | 1.97 |
| Red Willow | 1.94 |
| Richardson | 2.04 |
| Rock | 1.92 |
| Saline | 2.00 |
| Sarpy | 1.99 |
| Saunders | 1.99 |
| Scotts Bluff | 2.01 |
| Seward | 1.99 |
| Sheridan | 1.97 |
| Sherman | 1.93 |
| Sioux | 2.01 |
| Stanton | 1.98 |
| Thayer | 1.99 |
| Thomas | 1.93 |
| Thurston | 1.98 |
| Valley | 1.93 |

1978 CROP CORN LOAN AND PURCHASE PROGRAM SUPPLEMENT—Continued

| County | Rate per Bushel |
|---|---|
| Washington | 2.01 |
| Wayne | 1.96 |
| Webster | 1.96 |
| Wheeler | 1.95 |
| York | 1.97 |
| Weighted Avg. for State | 1.96 |
| **NEVADA** | |
| All Counties | 2.21 |
| **NEW HAMPSHIRE** | |
| All Counties | 2.23 |
| **NEW JERSEY** | |
| All Counties | 2.19 |
| **NEW MEXICO** | |
| Curry | 2.10 |
| Hardin | 2.10 |
| Lea | 2.10 |
| Quay | 2.10 |
| Roosevelt | 2.10 |
| Union | 2.10 |
| All Other Counties | 2.17 |
| Weighted Avg. for State | 2.11 |
| **NEW YORK** | |
| All Counties | 2.18 |
| **NORTH CAROLINA** | |
| All Counties | 2.16 |
| **NORTH DAKOTA** | |
| All Counties | 1.92 |
| **OHIO** | |
| Adams | 2.07 |
| Allen | 2.04 |
| Ashland | 2.07 |
| Ashtabula | 2.14 |
| Athens | 2.10 |
| Auglaize | 2.03 |
| Belmont | 2.12 |
| Brown | 2.07 |
| Butler | 2.04 |
| Carroll | 2.11 |
| Champaign | 2.03 |
| Clark | 2.03 |
| Clermont | 2.06 |
| Clinton | 2.05 |
| Columbiana | 2.14 |
| Coshocton | 2.08 |
| Crawford | 2.05 |
| Cuyahoga | 2.10 |
| Darke | 2.02 |
| Defiance | 2.03 |
| Delaware | 2.04 |
| Erie | 2.06 |
| Fairfield | 2.06 |
| Fayette | 2.04 |
| Franklin | 2.03 |
| Fulton | 2.05 |
| Gallia | 2.08 |
| Geauga | 2.12 |
| Greene | 2.03 |
| Guernsey | 2.10 |
| Hamilton | 2.05 |
| Hancock | 2.05 |
| Hardin | 2.04 |
| Harrison | 2.12 |
| Henry | 2.05 |
| Highland | 2.05 |
| Hocking | 2.07 |
| Holmes | 2.08 |
| Huron | 2.06 |
| Jackson | 2.07 |
| Jefferson | 2.13 |
| Knox | 2.05 |
| Lake | 2.12 |
| Lawrence | 2.08 |
| Licking | 2.05 |
| Logan | 2.04 |
| Lorain | 2.07 |
| Lucas | 2.07 |
| Madison | 2.03 |
| Mahoning | 2.14 |
| Marion | 2.05 |
| Medina | 2.09 |
| Meigs | 2.09 |
| Mercer | 2.02 |
| Miami | 2.03 |
| Monroe | 2.13 |

1978 CROP CORN LOAN AND PURCHASE PROGRAM SUPPLEMENT—Continued

| County | Rate per Bushel |
|---|---|
| Montgomery | 2.03 |
| Morgan | 2.10 |
| Morrow | 2.05 |
| Muskingum | 2.08 |
| Noble | 2.11 |
| Ottawa | 2.07 |
| Paulding | 2.03 |
| Perry | 2.08 |
| Pickaway | 2.04 |
| Pike | 2.06 |
| Portage | 2.12 |
| Preble | 2.03 |
| Putnam | 2.04 |
| Richland | 2.05 |
| Ross | 2.05 |
| Sandusky | 2.05 |
| Scioto | 2.07 |
| Seneca | 2.05 |
| Shelby | 2.03 |
| Stark | 2.11 |
| Summit | 2.10 |
| Trumbull | 2.14 |
| Tuscarawas | 2.10 |
| Union | 2.04 |
| Van Wert | 2.03 |
| Vinton | 2.07 |
| Warren | 2.05 |
| Washington | 2.12 |
| Wayne | 2.09 |
| Williams | 2.04 |
| Wood | 2.05 |
| Wyandot | 2.05 |
| Weighted Avg. for State | 2.05 |
| **OKLAHOMA** | |
| Beaver | 2.05 |
| Beckham | 2.09 |
| Cimarron | 2.04 |
| Ellis | 2.07 |
| Harmon | 2.09 |
| Harper | 2.05 |
| Roger Mills | 2.09 |
| Texas | 2.04 |
| All Other Counties | 2.11 |
| Weighted Avg. for State | 2.05 |
| **OREGON** | |
| All Counties | 2.17 |
| **PENNSYLVANIA** | |
| All Counties | 2.18 |
| **RHODE ISLAND** | |
| All Counties | 2.23 |
| **SOUTH CAROLINA** | |
| All Counties | 2.16 |
| **SOUTH DAKOTA** | |
| Aurora | 1.85 |
| Beadle | 1.85 |
| Bennett | 1.92 |
| Bon Homme | 1.89 |
| Brookings | 1.85 |
| Brown | 1.85 |
| Brule | 1.85 |
| Buffalo | 1.85 |
| Butte | 1.91 |
| Campbell | 1.87 |
| Charles Mix | 1.87 |
| Clark | 1.85 |
| Clay | 1.92 |
| Codington | 1.85 |
| Corson | 1.89 |
| Custer | 1.95 |
| Davison | 1.86 |
| Day | 1.85 |
| Deuel | 1.85 |
| Dewey | 1.89 |
| Douglas | 1.86 |
| Edmunds | 1.86 |
| Fall River | 1.98 |
| Faulk | 1.86 |
| Grant | 1.85 |
| Gregory | 1.87 |
| Haakon | 1.89 |
| Hamlin | 1.85 |
| Hand | 1.85 |
| Hanson | 1.86 |
| Harding | 1.91 |
| Hughes | 1.87 |

1978 CROP CORN LOAN AND PURCHASE PROGRAM SUPPLEMENT—Continued

| County | Rate per Bushel |
|---|---|
| Hutchinson | 1.88 |
| Hyde | 1.86 |
| Jackson | 1.90 |
| Jerauld | 1.85 |
| Jones | 1.89 |
| Kingsbury | 1.85 |
| Lake | 1.87 |
| Lawrence | 1.91 |
| Lincoln | 1.90 |
| Lyman | 1.87 |
| McCook | 1.87 |
| McPherson | 1.86 |
| Marshall | 1.85 |
| Meade | 1.90 |
| Mellette | 1.89 |
| Miner | 1.86 |
| Minnehaha | 1.88 |
| Moody | 1.87 |
| Pennington | 1.92 |
| Perkins | 1.89 |
| Potter | 1.88 |
| Roberts | 1.85 |
| Sanborn | 1.86 |
| Shannon | 1.95 |
| Spink | 1.85 |
| Stanley | 1.89 |
| Sully | 1.87 |
| Todd | 1.90 |
| Tripp | 1.88 |
| Turner | 1.89 |
| Union | 1.92 |
| Walworth | 1.87 |
| Washabaugh | 1.90 |
| Yankton | 1.90 |
| Ziebach | 1.90 |
| Weighted Avg. for State | 1.88 |
| **TENNESSEE** | |
| All Counties | 2.12 |
| **TEXAS** | |
| Armstrong | 2.06 |
| Bailey | 2.06 |
| Briscoe | 2.06 |
| Carson | 2.06 |
| Castro | 2.06 |
| Childress | 2.07 |
| Cochran | 2.08 |
| Collingsworth | 2.07 |
| Cottle | 2.08 |
| Crosby | 2.08 |
| Dallam | 2.06 |
| Deaf Smith | 2.06 |
| Dickens | 2.08 |
| Donley | 2.07 |
| Floyd | 2.06 |
| Gray | 2.06 |
| Hale | 2.06 |
| Hall | 2.07 |
| Hansford | 2.06 |
| Hartley | 2.06 |
| Hemphill | 2.06 |
| Hockley | 2.08 |
| Hutchinson | 2.06 |
| King | 2.08 |
| Lamb | 2.06 |
| Lipscomb | 2.06 |
| Lubbock | 2.08 |
| Moore | 2.06 |
| Motley | 2.08 |
| Ochiltree | 2.06 |
| Oldham | 2.06 |
| Parmer | 2.06 |
| Potter | 2.06 |
| Randall | 2.06 |
| Roberts | 2.06 |
| Sherman | 2.06 |
| Swisher | 2.06 |
| Wheeler | 2.07 |
| All Other Counties | 2.13 |
| Weighted Avg. for State | 2.07 |
| **UTAH** | |
| All Counties | 2.20 |
| **VERMONT** | |
| All Counties | 2.23 |
| **VIRGINIA** | |
| All Counties | 2.17 |

1978 CROP CORN LOAN AND PURCHASE PROGRAM SUPPLEMENT—Continued

| County | Rate per Bushel |
|---|---|
| **WASHINGTON** | |
| All Counties | 2.15 |
| **WEST VIRGINIA** | |
| All Counties | 2.16 |
| **WISCONSIN** | |
| Adams | 1.96 |
| Ashland | 1.96 |
| Barron | 1.94 |
| Bayfield | 1.93 |
| Brown | 1.98 |
| Buffalo | 1.93 |
| Burnett | 1.92 |
| Calumet | 1.98 |
| Chippewa | 1.94 |
| Clark | 1.96 |
| Columbia | 2.00 |
| Crawford | 1.96 |
| Dane | 2.02 |
| Dodge | 2.02 |
| Door | 1.99 |
| Douglas | 1.91 |
| Dunn | 1.94 |
| Eau Claire | 1.94 |
| Florence | 1.98 |
| Fond du Lac | 2.00 |
| Forest | 1.98 |
| Grant | 1.98 |
| Green | 2.02 |
| Green Lake | 2.00 |
| Iowa | 2.02 |
| Iron | 1.97 |
| Jackson | 1.94 |
| Jefferson | 2.03 |
| Juneau | 1.96 |
| Kenosha | 2.05 |
| Kewaunee | 1.99 |
| La Crosse | 1.93 |
| Lafayette | 2.01 |
| Langlade | 1.98 |
| Lincoln | 1.97 |
| Manitowoc | 1.99 |
| Marathon | 1.97 |
| Marinette | 1.98 |
| Marquiette | 1.98 |
| Menominee | 1.98 |
| Milwaukee | 2.03 |
| Monroe | 1.94 |
| Oconto | 1.98 |
| Oneida | 1.98 |
| Outagamie | 1.97 |
| Ozaukee | 2.01 |
| Pepin | 1.93 |
| Pierce | 1.93 |
| Polk | 1.92 |
| Portage | 1.97 |
| Price | 1.96 |
| Racine | 2.05 |
| Richland | 1.99 |
| Rock | 2.03 |
| Rusk | 1.95 |
| St. Croix | 1.93 |
| Sauk | 1.99 |
| Sawyer | 1.95 |
| Shawano | 1.98 |
| Sheboygan | 1.99 |
| Taylor | 1.96 |
| Trempealeau | 1.93 |
| Vernon | 1.94 |
| Vilas | 1.98 |
| Walworth | 2.04 |
| Washburn | 1.94 |
| Washington | 2.02 |
| Waukesha | 2.03 |
| Waupaca | 1.98 |
| Waushara | 1.98 |
| Winnebago | 1.98 |
| Wood | 1.96 |
| Weighted Avg. for State | 1.99 |
| **WYOMING** | |
| All Counties | 2.08 |

(b) *Premiums and discounts.* The basic loan and purchase rates shall be adjusted as applicable by premiums and discounts as follows:

| Premiums | Cents per bushel |
|---|---|
| (i) Moisture (percent): | |
| 14.6 through 15.0 | +1 |
| 14.5 or less | +2 |
| (ii) Broken corn and foreign material (percent): | |
| 2.0 or less | +2 |

Premiums do not apply to sample grade corn.

| Discounts | Cents per bushel |
|---|---|
| (i) Class—mixed corn | −2 |
| (ii) Test weight per bushel, pounds: | |
| 53.0 through 53.9 | −1 |
| 52.0 through 52.9 | −2 |
| 51.0 through 51.9 | −4 |
| 50.0 through 50.9 | −6 |
| 49.0 through 49.9 | −9 |
| (iii) Total damage (percent): | |
| 5.1 through 6.0 | −1 |
| 6.1 through 7.0 | −2 |
| (iv) Heat damage (percent): | |
| .21 through .50 | −1 |
| (v) Broken corn and foreign material (percent): | |
| 3.1 through 4.0 | −2 |
| (vi) Weed control laws: | |
| Where required by § 1421.15 | −10 |

(c) *Other.* Corn with quality factors exceeding limits shown in foregoing schedule or corn that (1) contains in excess of 15.5 percent moisture, (2) is weevily, (3) is musty, (4) is sour, shall not be eligible for loan. In the event quantities of corn exceeding limits shown are delivered in satisfaction of loan obligations, such quantities will be discounted on the basis of the schedule of discounts as provided by the Kansas City Commodity Office for settlement purposes. Such discounts will be established not later than the time delivery of corn to CCC begins and will thereafter be adjusted from time to time as CCC determines appropriate to reflect changes in market conditions. Producers may obtain schedules of such factors and discounts at county ASCS offices approximately one month prior to the loan maturity date.

Signed at Washington, D.C., on January 9, 1979.

STEWART N. SMITH,
*Acting Executive Vice President, Commodity Credit Corporation.*

[FR Doc. 79-1648 Filed 1-17-79; 8:45 am]

---

[3410-05-M]

[CCC Grain Price Support Regulations, 1978 Crop Rye Supplement]

## PART 1421—GRAINS AND SIMILARLY HANDLED COMMODITIES

### Subpart—1978 Crop Rye Loan and Purchase Program

AGENCY: Commodity Credit Corporation, Department of Agriculture.

ACTION: Final rule.

SUMMARY: The purpose of this rule is to set forth the: (1) Final loan and purchase availability dates, (2) maturity dates, and (3) loan and purchase rates and premiums and discounts under which the Commodity Credit Corporation (CCC) will extend price support on 1978-crop rye. This rule is needed in order to provide a price support program for rye. This rule will enable eligible rye producers to obtain loans and purchases on their eligible 1978-crop rye.

EFFECTIVE DATE: January 18, 1979.

ADDRESS: Price Support and Loan Division, ASCS, U.S. Department of Agriculture, 3732 South Building, P.O. Box 2415, Washington, D. C. 20013.

FOR FURTHER INFORMATION CONTACT:

Merle Strawderman, ASCS, (202) 447-7973.

SUPPLEMENTARY INFORMATION: A notice of proposed rulemaking was published in the FEDERAL REGISTER on December 21, 1977, 42 FR 56751 stating that the Department of Agriculture proposed to make determinations and issue regulations relative to a loan and purchase program for the 1978 crop of feed grains including rye. Such determinations included determining loan and purchase rates and other related program provisions. No recommendations were received concerning the loan and purchase program for rye. After considering applicable factors, it has been determined that the loan and purchase rates for 1978 crop rye on a national average will be $1.70 per bushel.

Producers who wish to secure loans can do so by contacting their local Agricultural Stabilization and Conservation Service Office or Agricultural Service Center.

FINAL RULE

Since storage can now be deducted, the General Regulations Governing Price Support for 1978 and Subsequent Crops, and any amendments thereto and the 1978 and Subsequent Crops Rye Loan and Purchase Regulations, and any amendments thereto in this Part 1421 are further supplemented for the 1978 crop of rye. Accordingly, the regulations in 7 CFR's 1421.350 and the title of the subpart are revised to read as provided below effective as the 1978 crop of rye. The material previously appearing in these sections shall remain in full force and effect as to the crops to which it is applicable.

Subpart—1978 Crop Rye Loan and Purchase Program

Sec.
1421.350 Purpose.
1421.351 Availability.
1421.352 Maturity of loans.
1421.353 Warehouse charges.
1421.354 Loans and purchase rates, premiums and discounts.

AUTHORITY: Secs. 4 and 5, 62 Stat. 100, as amended (15 U.S.C. 714b and c); Secs. 105 A, 401, 63 Stat. 1051, as amended (7 U.S.C. 1444 c, 1421).

§ 1421.350 Purpose.

This supplement contains additional program provisions which together with the provisions of the General Regulations Governing Price Support for the 1978 and Subsequent Crops, the 1978 and Subsequent Crops Rye Loan and Purchase Program regulations, and any amendments thereto, apply to loans on and purchase of the 1978 crop of rye.

§ 1421.351 Availability.

(a) *Loans.* Producers desiring to participate in the program through loans must request a loan on their 1978 crop of eligible rye on or before March 31, 1979.

(b) *Purchases.* A producer desiring to offer eligible 1978 crop rye not under loan for purchase must execute and deliver to the county ASCS office on or before March 31, 1979, a Purchase Agreement (Form CCC-614) indicating the approximate quantity of 1978 crop rye they will sell to CCC.

§ 1421.352 Maturity of loans.

Loans mature on demand but not later than the last day of the ninth calendar month following the month the loan is disbursed.

§ 1421.353 Warehouse charges.

If storage is not provided for through loan maturity the county office shall deduct storage charges at the daily storage rate for the storage warehouse times the number of days from the date the commodity was received or date through which storage has been provided for to the maturity date.

§ 1421.354 Loan and purchase rates, premiums, and discounts.

(a) *Basic loan and purchase rates.* Basic county rates per bushel for loan and settlement purposes for rye are established for rye grading U.S. No. 2 or better, or U.S. No. 3 on the factor of test weight only and are as follows:

1978 CROP RYE LOAN AND PURCHASE PROGRAM SUPPLEMENT

*1978 Crop Rye Loan and Purchase Rates*

| County | Rate per Bushel |
|---|---|
| ALABAMA | |
| All Counties | $1.80 |
| ARIZONA | |
| All Counties | 1.77 |

1978 CROP RYE LOAN AND PURCHASE PROGRAM SUPPLEMENT—Continued

| County | Rate per Bushel |
|---|---|
| ARKANSAS | |
| All Counties | 1.74 |
| CALIFORNIA | |
| Alameda | 1.94 |
| Los Angeles | 1.94 |
| Sacramento | 1.94 |
| San Diego | 1.94 |
| San Francisco | 1.94 |
| San Joaquin | 1.94 |
| All Other Counties | 1.81 |
| Weighted Avg. for State | 1.81 |
| COLORADO | |
| All Counties | 1.63 |
| CONNECTICUT | |
| All Counties | 1.78 |
| DELAWARE | |
| All Counties | 1.83 |
| FLORIDA | |
| All Counties | 1.87 |
| GEORGIA | |
| All Counties | 1.87 |
| IDAHO | |
| All Counties | 1.72 |
| ILLINOIS | |
| Cook | 1.81 |
| St. Clair | 1.81 |
| All Other Counties | 1.75 |
| Weighted Avg. for State | 1.75 |
| INDIANA | |
| All Counties | 1.73 |
| IOWA | |
| Pottawattamie | 1.72 |
| Woodbury | 1.72 |
| All Other Counties | 1.68 |
| Weighted Avg. for State | 1.68 |
| KANSAS | |
| Wyandotte | 1.72 |
| All Other Counties | 1.62 |
| Weighted Avg. for State | 1.62 |
| KENTUCKY | |
| All Counties | 1.80 |
| LOUISIANA | |
| East Baton Rouge | 1.96 |
| Jefferson | 1.96 |
| Orleans | 1.96 |
| St. Charles | 1.96 |
| West Baton Rouge | 1.96 |
| All Other Counties | 1.77 |
| Weighted Avg. for State | 1.77 |
| MAINE | |
| All Counties | 1.78 |
| MARYLAND | |
| Baltimore | 1.94 |
| All Other Counties | 1.83 |
| Weighted Avg. for State | 1.83 |
| MASSACHUSETTS | |
| All Counties | 1.78 |
| MICHIGAN | |
| All Counties | 1.65 |
| MINNESOTA | |
| Hennepin | 1.74 |
| St. Louis | 1.74 |
| All Other Counties | 1.68 |
| Weighted Avg. for State | 1.68 |
| MISSISSIPPI | |
| All Counties | 1.82 |
| MISSOURI | |
| St. Louis | 1.85 |
| All Other Counties | 1.72 |
| Weighted Avg. for State | 1.72 |
| MONTANA | |
| All Counties | 1.53 |
| NEBRASKA | |
| All Counties | 1.62 |
| NEVADA | |
| All Counties | 1.67 |

1978 CROP RYE LOAN AND PURCHASE PROGRAM SUPPLEMENT—Continued

| County | Rate per Bushel |
|---|---|
| NEW HAMPSHIRE | |
| All Counties | 1.78 |
| NEW JERSEY | |
| All Counties | 1.80 |
| NEW MEXICO | |
| All Counties | 1.67 |
| NEW YORK | |
| Albany | 1.94 |
| New York City | 1.94 |
| All Other Counties | 1.78 |
| Weighted Avg. for State | 1.78 |
| NORTH CAROLINA | |
| All Counties | 1.87 |
| NORTH DAKOTA | |
| All Counties | 1.58 |
| OHIO | |
| All Counties | 1.73 |
| OKLAHOMA | |
| All Counties | 1.70 |
| OREGON | |
| Clatsop | 1.95 |
| Multnomah | 1.95 |
| All Other Counties | 1.82 |
| Weighted Avg. for State | 1.82 |
| PENNSYLVANIA | |
| Philadelphia | 1.94 |
| All Other Counties | 1.78 |
| Weighted Avg. for State | 1.78 |
| RHODE ISLAND | |
| All Counties | 1.78 |
| SOUTH CAROLINA | |
| Charleston | 1.94 |
| All Other Counties | 1.85 |
| Weighted Avg. for State | 1.85 |
| SOUTH DAKOTA | |
| All Counties | 1.62 |
| TENNESSEE | |
| Shelby | 1.87 |
| All Other Counties | 1.82 |
| Weighted Avg. for State | 1.82 |
| TEXAS | |
| Galveston | 1.96 |
| Harris | 1.96 |
| Jefferson | 1.96 |
| Nueces | 1.96 |
| San Patricio | 1.96 |
| All Other Counties | 1.75 |
| Weighted Avg. for State | 1.75 |
| UTAH | |
| All Counties | 1.62 |
| VERMONT | |
| All Counties | 1.78 |
| VIRGINIA | |
| Chesapeake (Norfolk) | 1.94 |
| All Other Counties | 1.83 |
| Weighted Avg. for State | 1.83 |
| WASHINGTON | |
| Clark | 1.95 |
| Cowlitz | 1.95 |
| King | 1.95 |
| Pierce | 1.95 |
| All Other Counties | 1.82 |
| Weighted Avg. for State | 1.82 |
| WEST VIRGINIA | |
| All Counties | 1.80 |
| WISCONSIN | |
| Douglas | 1.74 |
| Milwaukee | 1.82 |
| All Other Counties | 1.73 |
| Weighted Avg. for State | 1.73 |
| WYOMING | |
| All Counties | 1.62 |

(b) Schedule of Premiums and Discounts for 1978—Crop Rye:

1. *Premiums:* Rye, grading U.S. No. 1, +2

2. *Discounts:*

a. Rye, grading U.S. No. 3 on account of test weight, −2.

b. Rye, grading U.S. No. 3 on account of "thin" rye: 15.1-17.0% thins, −3; 17.1-19.0% thins, −5; 19.1-21.0% thins, −7; 21.1-23.0% thins, −9; 23.1-25.0% thins, −11.

c. Rye, grading U.S. No. 3 for factors other than test weight or % of thins, −5.

d. Weed control discount (where required by § 1421.24), −10.

(c) *Other.* Rye with quality factors exceeding limits shown in foregoing schedule or rye that (1) contains in excess of 14 percent moisture, (2) is weevily, (3) is musty, (4) sour, shall not be eligible for loan. In the event quantities of rye exceeding limits shown are delivered in satisfaction of loan obligations, such quantities will be discounted on the basis of the schedule of discounts as provided by the Kansas City Commodity Office for settlement purposes. Such discounts will be established not later than the time delivery of rye to CCC begins and will thereafter be adjusted from time to time as CCC determines appropriate to reflect changes in market conditions. Producers may obtain schedules of such factors and discounts at county ASCS offices approximately one month prior to the loan maturity date.

Signed at Washington, D.C., on January 9, 1979.

STEWART N. SMITH,
*Acting Executive Vice President, Commodity Credit Corporation.*

[FR Doc. 79-1646 Filed 1-17-79; 8:45 a.m.]

---

[3410-05-M]

[CCC Grain Price Support Regulations, 1978 Crop Sorghum Supplement]

## PART 1421—GRAINS AND SIMILARLY HANDLED COMMODITIES

### Subpart—1978 Crop Sorghum Loan and Purchase Program

AGENCY: Commodity Credit Corporation, Department of Agriculture.

ACTION: Final rule.

SUMMARY: The purpose of this rule is to set forth the: (1) Final loan and purchase availability dates, (2) maturity dates, and (3) loan and purchase rates and premiums and discounts under which Commodity Credit Corporation (CCC) will extend price support on 1978 crop sorghum. This rule is needed in order to provide a price support program for sorghum. This rule will enable eligible sorghum producers to obtain loans and purchases on their eligible 1978 crop sorghum.

EFFECTIVE DATE: January 18, 1979.

ADDRESS: Price Support and Loan Division, ASCS, U.S. Department of Agriculture, 3732 South Building, P.O. Box 2415, Washington, D.C. 20013.

FOR FURTHER INFORMATION CONTACT:

Merle Strawderman, ASCS, (202) 447-7973.

SUPPLEMENTARY INFORMATION: A notice of proposed rulemaking was published in the FEDERAL REGISTER on December 21, 1977, 42 FR 56751 stating that the Department of Agriculture proposed to make determinations and issue regulations relative to a loan and purchase program for the 1978 crop of feed grains including sorghum. Such determinations included determining loan and purchase rates and other related program provisions. Twelve recommendations were received: 6 dealing with loan rates, and 6 pertaining to target prices. After considering applicable factors, it has been determined that the loan and purchase rates for 1978 crop sorghum a national average will be $3.39 per hundredweight.

Producers who wish to secure loans can do so by contacting their local Agricultural Stabilization and Conservation Service Office or Agricultural Service Center.

FINAL RULE

The General Regulations Governing Price Support for 1978 and Subsequent Crops, and any amendments thereto and the 1978 and Subsequent Crops Sorghum Loan and Purchase Regulations, and any amendments thereto in this Part 1421 are further supplemented for the 1978 and subsequent crops of sorghum. Accordingly, the regulations in 7 CFR § 1421.235 through 1421.237 and the title of the subpart are revised to read as provided below, effective as to the 1978 crop of sorghum. The material previously appearing in these sections shall remain in full force and effect as to the crops to which it is applicable.

**Subpart—1978 Crop Sorghum Loan and Purchase Program**

Sec.
1421.235 Availability.
1421.236 Maturity of loans.
1421.237 Warehouse charges.
1421.238 Loans and purchase rates and discounts.

AUTHORITY: Secs. 4 and 5, 62 Stat. 1070, as amended (15 U.S.C. 714b and c); Secs. 105A, 401, 63 Stat. 1051, as amended (7 U.S.C. 1444c, 1421).

§ 1421.235 Availability.

(a) *Loans.* Producers desiring to participate in the program through loans must request a loan on their 1978 crop of eligible sorghum on or before May 31, 1979.

(b) *Purchases.* A producer desiring to offer eligible 1978 crop sorghum not under loan for purchase must execute and deliver to the county ASCS office on or before May 31, 1979, a Purchase Agreement (Form CCC-614) indicating the approximate quantity of 1978 crop sorghum he will sell to CCC.

§ 1421.236 Maturity of loans.

Loans mature on demand but not later than the last day of the ninth calendar month following the month the loan is disbursed.

§ 1421.237 Warehouse charges.

If storage is not provided for through loan maturity, the county office shall deduct storage charges at the daily storage rate for the storing warehouse times the number of days from the date the commodity was received or date through which storage has been provided for to the maturity date.

§ 1421.238 Loans and purchase rates and discounts.

(a) *Basic rates (counties).* Basic county rates for loan and settlement purposes for sorghum grading U.S. No. 2 or better are established as follows:

1978 CROP SORGHUM LOAN AND PURCHASE PROGRAM SUPPLEMENT

*1978 Crop Sorghum Loan and Purchase*

Basic County Loan and Purchase Rates for Sorghum No. 2 or Better

| *County* | *Rate per Cwt.* |
|---|---|
| ALABAMA | |
| All Counties | $3.37 |
| ARIZONA | |
| Apache | 3.36 |
| Cochise | 3.58 |
| Coconino | 3.36 |
| Gila | 3.36 |
| Graham | 3.40 |
| Greenlee | 3.36 |
| Maricopa | 3.72 |
| Mohave | 3.84 |
| Navajo | 3.36 |
| Pima | 3.64 |
| Pinal | 3.72 |
| Santa Cruz | 3.61 |
| Yavapai | 3.36 |
| Yuma | 3.77 |
| Weighted Avg. for State | 3.59 |
| ARKANSAS | |
| Arkansas | 3.47 |
| Ashley | 3.43 |
| Baxter | 3.35 |
| Benton | 3.28 |
| Boone | 3.31 |
| Bradley | 3.41 |
| Calhoun | 3.40 |
| Carroll | 3.28 |
| Chicot | 3.43 |
| Clark | 3.36 |
| Clay | 3.49 |
| Cleburne | 3.42 |
| Cleveland | 3.43 |
| Columbia | 3.39 |
| Conway | 3.38 |
| Craighead | 3.50 |
| Crawford | 3.33 |
| Crittenden | 3.51 |
| Cross | 3.50 |
| Dallas | 3.39 |
| Desha | 3.45 |
| Drew | 3.43 |
| Faulkner | 3.41 |
| Franklin | 3.33 |
| Fulton | 3.40 |
| Garland | 3.35 |

1978 CROP SORGHUM LOAN AND PURCHASE PROGRAM SUPPLEMENT—Continued

| *County* | *Rate per Cwt.* |
|---|---|
| ARKANSAS—Continued | |
| Grant | 3.38 |
| Greene | 3.49 |
| Hempstead | 3.37 |
| Hot Spring | 3.36 |
| Howard | 3.34 |
| Independence | 3.42 |
| Izard | 3.38 |
| Jackson | 3.47 |
| Jefferson | 3.43 |
| Johnson | 3.33 |
| Lafayette | 3.39 |
| Lawrence | 3.47 |
| Lee | 3.50 |
| Lincoln | 3.44 |
| Little River | 3.36 |
| Logan | 3.33 |
| Lonoke | 3.45 |
| Madison | 3.29 |
| Marion | 3.32 |
| Miller | 3.38 |
| Mississippi | 3.51 |
| Monroe | 3.49 |
| Montgomery | 3.33 |
| Nevada | 3.37 |
| Newton | 3.32 |
| Quachita | 3.38 |
| Perry | 3.36 |
| Phillips | 3.50 |
| Pike | 3.35 |
| Poinsett | 3.50 |
| Polk | 3.33 |
| Pope | 3.35 |
| Prairie | 3.47 |
| Pulaski | 3.43 |
| Randolph | 3.46 |
| St. Francis | 3.50 |
| Saline | 3.37 |
| Scott | 3.33 |
| Searcy | 3.34 |
| Sebastian | 3.33 |
| Sevier | 3.34 |
| Sharp | 3.42 |
| Stone | 3.38 |
| Union | 3.39 |
| Van Buren | 3.39 |
| Washington | 3.29 |
| White | 3.45 |
| Woodruff | 3.48 |
| Yell | 3.35 |
| Weighted Avg. for State | 3.46 |
| CALIFORNIA | |
| Alameda | 3.86 |
| Amador | 3.85 |
| Butte | 3.75 |
| Calaveras | 3.85 |
| Colusa | 3.79 |
| Contra Costa | 3.86 |
| El Dorado | 3.84 |
| Fresno | 3.78 |
| Glenn | 3.76 |
| Humboldt | 3.50 |
| Imperial | 3.81 |
| Inyo | 3.57 |
| Kern | 3.82 |
| Kings | 3.77 |
| Lake | 3.69 |
| Lassen | 3.54 |
| Los Angeles | 3.86 |
| Madera | 3.81 |
| Marin | 3.82 |
| Mariposa | 3.81 |
| Mendocino | 3.61 |
| Merced | 3.82 |
| Modoc | 3.53 |
| Monterey | 3.73 |
| Napa | 3.80 |
| Orange | 3.86 |
| Placer | 3.79 |
| Plumas | 3.61 |
| Riverside | 3.81 |
| Sacramento | 3.86 |
| San Benito | 3.79 |
| San Bernardino | 3.84 |
| San Diego | 3.86 |
| San Francisco | 3.86 |
| San Joaquin | 3.86 |
| San Luis Obispo | 3.70 |
| San Mateo | 3.85 |

1978 CROP SORGHUM LOAN AND PURCHASE PROGRAM SUPPLEMENT—Continued

CALIFORNIA—Continued

| County | Rate per Cwt. |
|---|---|
| Santa Barbara | 3.73 |
| Santa Clara | 3.86 |
| Santa Cruz | 3.78 |
| Shasta | 3.56 |
| Sierra | 3.63 |
| Siskiyou | 3.52 |
| Solano | 3.85 |
| Sonoma | 3.81 |
| Stanislaus | 3.86 |
| Sutter | 3.79 |
| Tehama | 3.74 |
| Tulare | 3.76 |
| Tuolumne | 3.81 |
| Ventura | 3.83 |
| Yolo | 3.79 |
| Yuba | 3.78 |
| Weighted Avg. for State | 3.80 |
| COLORADO | |
| Baca | 3.33 |
| All Other | 3.28 |
| Weighted Avg. for State | 3.28 |
| DELAWARE | |
| All Counties | 3.42 |
| FLORIDA | |
| All Counties | 3.37 |
| GEORGIA | |
| All Counties | 3.42 |
| IDAHO | |
| All Counties | 3.15 |
| ILLINOIS | |
| Alexander | 3.42 |
| Bond | 3.34 |
| Calhoun | 3.30 |
| Clay | 3.34 |
| Clinton | 3.36 |
| Edwards | 3.36 |
| Franklin | 3.37 |
| Gallatin | 3.36 |
| Hamilton | 3.38 |
| Hardin | 3.39 |
| Jackson | 3.39 |
| Jefferson | 3.36 |
| Jersey | 3.30 |
| Johnson | 3.40 |
| Lawrence | 3.32 |
| Madison | 3.36 |
| Marion | 3.35 |
| Massac | 3.41 |
| Monroe | 3.36 |
| Perry | 3.37 |
| Pope | 3.40 |
| Pulaski | 3.42 |
| Randolph | 3.37 |
| Richland | 3.33 |
| Saint Clair | 3.36 |
| Saline | 3.38 |
| Union | 3.41 |
| Wabash | 3.33 |
| Washington | 3.36 |
| Wayne | 3.36 |
| White | 3.36 |
| Williamson | 3.39 |
| All Other Counties | 3.24 |
| Weighted Avg. for State | 3.34 |
| INDIANA | |
| All Counties | 3.29 |
| IOWA | |
| Adair | 3.27 |
| Adams | 3.26 |
| Appanoose | 3.23 |
| Audubon | 3.25 |
| Calhoun | 3.20 |
| Carroll | 3.24 |
| Cass | 3.28 |
| Clarke | 3.24 |
| Crawford | 3.25 |
| Decatur | 3.25 |
| Fremont | 3.28 |
| Greene | 3.21 |
| Guthrie | 3.24 |
| Harrison | 3.27 |
| Ida | 3.22 |
| Lucas | 3.23 |
| Madison | 3.25 |
| Marion | 3.20 |
| Mills | 3.28 |
| Monona | 3.26 |

1978 CROP SORGHUM LOAN AND PURCHASE PROGRAM SUPPLEMENT—Continued

IOWA—Continued

| County | Rate per Cwt. |
|---|---|
| Monroe | 3.21 |
| Montgomery | 3.28 |
| Page | 3.28 |
| Pottawattamie | 3.28 |
| Ringgold | 3.27 |
| Sac | 3.22 |
| Shelby | 3.26 |
| Taylor | 3.27 |
| Union | 3.25 |
| Warren | 3.23 |
| Wayne | 3.24 |
| Woodbury | 3.24 |
| All Other Counties | 3.16 |
| Weighted Avg. for State | 3.22 |
| KANSAS | |
| Allen | 3.36 |
| Anderson | 3.37 |
| Atchison | 3.40 |
| Barber | 3.26 |
| Barton | 3.22 |
| Bourbon | 3.37 |
| Brown | 3.37 |
| Butler | 3.27 |
| Chase | 3.32 |
| Chautauqua | 3.31 |
| Cherokee | 3.35 |
| Cheyenne | 3.19 |
| Clark | 3.26 |
| Clay | 3.28 |
| Cloud | 3.27 |
| Coffey | 3.34 |
| Comanche | 3.26 |
| Cowley | 3.27 |
| Crawford | 3.36 |
| Decatur | 3.21 |
| Dickinson | 3.27 |
| Doniphan | 3.36 |
| Douglas | 3.38 |
| Edwards | 3.22 |
| Elk | 3.31 |
| Ellis | 3.22 |
| Ellsworth | 3.24 |
| Finney | 3.23 |
| Ford | 3.26 |
| Franklin | 3.39 |
| Geary | 3.31 |
| Gove | 3.22 |
| Graham | 3.22 |
| Grant | 3.23 |
| Gray | 3.25 |
| Greeley | 3.19 |
| Greenwood | 3.32 |
| Hamilton | 3.21 |
| Harper | 3.26 |
| Harvey | 3.26 |
| Haskell | 3.24 |
| Hodgemen | 3.24 |
| Jackson | 3.38 |
| Jefferson | 3.39 |
| Jewell | 3.25 |
| Johnson | 3.39 |
| Kearny | 3.21 |
| Kingman | 3.25 |
| Kiowa | 3.24 |
| Labette | 3.35 |
| Lane | 3.20 |
| Leavenworth | 3.40 |
| Lincoln | 3.25 |
| Linn | 3.39 |
| Logan | 3.20 |
| Lyon | 3.33 |
| McPherson | 3.26 |
| Marion | 3.27 |
| Marshall | 3.32 |
| Meade | 3.25 |
| Miami | 3.39 |
| Mitchell | 3.25 |
| Montgomery | 3.35 |
| Morris | 3.31 |
| Morton | 3.25 |
| Nemaha | 3.34 |
| Neosho | 3.36 |
| Ness | 3.21 |
| Norton | 3.22 |
| Osage | 3.35 |
| Osborne | 3.24 |
| Ottawa | 3.26 |
| Pawnee | 3.22 |
| Phillips | 3.23 |
| Pottawatomie | 3.34 |
| Pratt | 3.24 |

1978 CROP SORGHUM LOAN AND PURCHASE PROGRAM SUPPLEMENT—Continued

KANSAS—Continued

| County | Rate per Cwt. |
|---|---|
| Rawlins | 3.20 |
| Reno | 3.24 |
| Republic | 3.27 |
| Rice | 3.24 |
| Riley | 3.32 |
| Rooks | 3.24 |
| Rush | 3.22 |
| Russell | 3.22 |
| Saline | 3.26 |
| Scott | 3.20 |
| Sedgwick | 3.26 |
| Seward | 3.25 |
| Shawnee | 3.37 |
| Sheridan | 3.22 |
| Sherman | 3.19 |
| Smith | 3.24 |
| Stafford | 3.22 |
| Stanton | 3.23 |
| Stevens | 3.25 |
| Sumner | 3.26 |
| Thomas | 3.20 |
| Trego | 3.22 |
| Wabaunsee | 3.34 |
| Wallace | 3.19 |
| Washington | 3.28 |
| Wichita | 3.20 |
| Wilson | 3.35 |
| Woodson | 3.34 |
| Wyandotte | 3.40 |
| Weighted Avg. for State | 3.28 |
| KENTUCKY | |
| All Counties | 3.37 |
| LOUISIANA | |
| All Counties | 3.39 |
| MARYLAND | |
| All Counties | 3.42 |
| MICHIGAN | |
| All Counties | 3.24 |
| MINNESOTA | |
| All Counties | 3.19 |
| MISSISSIPPI | |
| All Counties | 3.37 |
| MISSOURI | |
| Adair | 3.23 |
| Andrew | 3.36 |
| Atchison | 3.28 |
| Audrain | 3.28 |
| Barry | 3.26 |
| Barton | 3.30 |
| Bates | 3.36 |
| Benton | 3.30 |
| Bollinger | 3.39 |
| Boone | 3.27 |
| Buchanan | 3.38 |
| Butler | 3.45 |
| Caldwell | 3.38 |
| Callaway | 3.26 |
| Camden | 3.29 |
| Cape Girardeau | 3.40 |
| Carroll | 3.37 |
| Carter | 3.39 |
| Cass | 3.38 |
| Cedar | 3.29 |
| Chariton | 3.33 |
| Christian | 3.27 |
| Clark | 3.18 |
| Clay | 3.40 |
| Clinton | 3.39 |
| Cole | 3.26 |
| Cooper | 3.30 |
| Crawford | 3.29 |
| Dade | 3.26 |
| Dallas | 3.29 |
| Daviess | 3.33 |
| De Kalb | 3.33 |
| Dent | 3.32 |
| Douglas | 3.32 |
| Dunklin | 3.48 |
| Franklin | 3.32 |
| Gasconade | 3.27 |
| Gentry | 3.29 |
| Greene | 3.26 |
| Grundy | 3.32 |
| Harrison | 3.26 |
| Henry | 3.34 |
| Hickory | 3.30 |
| Holt | 3.31 |
| Howard | 3.30 |

1978 CROP SORGHUM LOAN AND PURCHASE PROGRAM SUPPLEMENT—Continued

MISSOURI—Continued

| County | Rate per Cwt. |
|---|---|
| Howell | 3.35 |
| Iron | 3.38 |
| Jackson | 3.40 |
| Jasper | 3.29 |
| Jefferson | 3.36 |
| Johnson | 3.36 |
| Knox | 3.22 |
| Laclede | 3.29 |
| Lafayette | 3.38 |
| Lawrence | 3.26 |
| Lewis | 3.20 |
| Lincoln | 3.30 |
| Linn | 3.30 |
| Livingston | 3.36 |
| McDonald | 3.26 |
| Macon | 3.27 |
| Madison | 3.39 |
| Maries | 3.27 |
| Marion | 3.22 |
| Mercer | 3.28 |
| Miller | 3.28 |
| Mississippi | 3.41 |
| Moniteau | 3.26 |
| Monroe | 3.27 |
| Montgomery | 3.29 |
| Morgan | 3.30 |
| New Madrid | 3.44 |
| Newton | 3.26 |
| Nodaway | 3.31 |
| Oregon | 3.38 |
| Osage | 3.27 |
| Ozark | 3.33 |
| Pemiscot | 3.49 |
| Perry | 3.38 |
| Pettis | 3.30 |
| Phelps | 3.27 |
| Pike | 3.27 |
| Platte | 3.40 |
| Polk | 3.27 |
| Pulaski | 3.27 |
| Putnam | 3.26 |
| Ralls | 3.23 |
| Randolph | 3.28 |
| Ray | 3.40 |
| Reynolds | 3.34 |
| Ripley | 3.44 |
| Saint Charles | 3.32 |
| Saint Clair | 3.32 |
| Saint Francois | 3.36 |
| Sainte Genevieve | 3.37 |
| Saint Louis | 3.36 |
| Saline | 3.34 |
| Schuyler | 3.20 |
| Scotland | 3.18 |
| Scott | 3.40 |
| Shannon | 3.34 |
| Shelby | 3.24 |
| Stoddard | 3.42 |
| Stone | 3.27 |
| Sullivan | 3.26 |
| Taney | 3.29 |
| Texas | 3.29 |
| Vernon | 3.33 |
| Warren | 3.31 |
| Washington | 3.35 |
| Wayne | 3.42 |
| Webster | 3.26 |
| Worth | 3.29 |
| Wright | 3.28 |
| Weighted Avg. for State | 3.35 |

NEBRASKA

| County | Rate per Cwt. |
|---|---|
| Antelope | 3.24 |
| Burt | 3.27 |
| Butler | 3.27 |
| Cass | 3.28 |
| Colfax | 3.26 |
| Cuming | 3.26 |
| Dodge | 3.27 |
| Douglas | 3.28 |
| Gage | 3.28 |
| Hall | 3.23 |
| Hamilton | 3.24 |
| Jefferson | 3.25 |
| Johnson | 3.28 |
| Lancaster | 3.27 |
| Madison | 3.25 |
| Merrick | 3.23 |
| Nemaha | 3.29 |
| Otoe | 3.27 |
| Pawnee | 3.29 |
| Pierce | 3.25 |

1978 CROP SORGHUM LOAN AND PURCHASE PROGRAM SUPPLEMENT—Continued

NEBRASKA—Continued

| County | Rate per Cwt. |
|---|---|
| Platte | 3.25 |
| Polk | 3.25 |
| Richardson | 3.31 |
| Saline | 3.27 |
| Sarpy | 3.28 |
| Saunders | 3.27 |
| Seward | 3.27 |
| Stanton | 3.26 |
| Thayer | 3.23 |
| Thurston | 3.26 |
| Washington | 3.28 |
| York | 3.26 |
| All Other Counties | 3.21 |
| Weighted Avg. for State | 3.25 |

NEVADA

| County | Rate per Cwt. |
|---|---|
| All Counties | 3.31 |

NEW MEXICO

| County | Rate per Cwt. |
|---|---|
| Chaves | 3.35 |
| Curry | 3.37 |
| De Baca | 3.34 |
| Guadalupe | 3.34 |
| Harding | 3.36 |
| Hidalgo | 3.40 |
| Lea | 3.37 |
| Luna | 3.40 |
| Quay | 3.37 |
| Roosevelt | 3.37 |
| Union | 3.33 |
| All Other Counties | 3.32 |
| Weighted Avg. for State | 3.37 |

NORTH CAROLINA

| County | Rate per Cwt. |
|---|---|
| All Counties | 3.42 |

NORTH DAKOTA

| County | Rate per Cwt. |
|---|---|
| All Counties | 3.14 |

OHIO

| County | Rate per Cwt. |
|---|---|
| All Counties | 3.29 |

OKLAHOMA

| County | Rate per Cwt. |
|---|---|
| Adair | 3.41 |
| Alfalfa | 3.38 |
| Atoka | 3.49 |
| Beaver | 3.34 |
| Beckham | 3.43 |
| Blaine | 3.44 |
| Bryan | 3.49 |
| Caddo | 3.48 |
| Canadian | 3.47 |
| Carter | 3.49 |
| Cherokee | 3.40 |
| Choctaw | 3.49 |
| Cimarron | 3.34 |
| Cleveland | 3.49 |
| Coal | 3.49 |
| Comanche | 3.48 |
| Cotton | 3.48 |
| Craig | 3.39 |
| Creek | 3.47 |
| Custer | 3.44 |
| Delaware | 3.41 |
| Dewey | 3.39 |
| Ellis | 3.38 |
| Garfield | 3.41 |
| Garvin | 3.49 |
| Grady | 3.49 |
| Grant | 3.38 |
| Greer | 3.44 |
| Harmon | 3.43 |
| Harper | 3.34 |
| Haskell | 3.47 |
| Hughes | 3.48 |
| Jackson | 3.44 |
| Jefferson | 3.49 |
| Johnston | 3.49 |
| Kay | 3.38 |
| Kingfisher | 3.44 |
| Kiowa | 3.47 |
| Latimer | 3.48 |
| Le Flore | 3.47 |
| Lincoln | 3.48 |
| Logan | 3.45 |
| Love | 3.49 |
| McClain | 3.49 |
| McCurtain | 3.47 |
| McIntosh | 3.47 |
| Major | 3.39 |
| Marshall | 3.50 |
| Mayes | 3.41 |
| Murray | 3.49 |
| Muskogee | 3.47 |

1978 CROP SORGHUM LOAN AND PURCHASE PROGRAM SUPPLEMENT—Continued

OKLAHOMA—Continued

| County | Rate per Cwt. |
|---|---|
| Noble | 3.42 |
| Nowata | 3.39 |
| Okfuskee | 3.47 |
| Oklahoma | 3.48 |
| Okmulgee | 3.47 |
| Osage | 3.40 |
| Ottawa | 3.39 |
| Pawnee | 3.43 |
| Payne | 3.45 |
| Pittsburg | 3.48 |
| Pontotoc | 3.49 |
| Pottawatomie | 3.48 |
| Pushmataha | 3.49 |
| Roger Mills | 3.39 |
| Rogers | 3.41 |
| Seminole | 3.48 |
| Sequoyah | 3.46 |
| Stephens | 3.49 |
| Texas | 3.34 |
| Tillman | 3.44 |
| Tulsa | 3.46 |
| Wagoner | 3.45 |
| Washington | 3.38 |
| Washita | 3.46 |
| Woods | 3.38 |
| Woodward | 3.36 |
| Weighted Avg. for State | 3.40 |

OREGON

| County | Rate per Cwt. |
|---|---|
| All Counties | 3.30 |

PENNSYLVANIA

| County | Rate per Cwt. |
|---|---|
| All Counties | 3.42 |

SOUTH CAROLINA

| County | Rate per Cwt. |
|---|---|
| All Counties | 3.42 |

SOUTH DAKOTA

| County | Rate per Cwt. |
|---|---|
| Bon Homme | 3.23 |
| Clay | 3.25 |
| Hutchinson | 3.22 |
| Lincoln | 3.24 |
| Turner | 3.22 |
| Union | 3.25 |
| Yankton | 3.25 |
| All Other Counties | 3.21 |
| Weighted Avg. for State | 3.21 |

TENNESSEE

| County | Rate per Cwt. |
|---|---|
| Shelby | 3.49 |
| All Other Counties | 3.37 |

TEXAS

| County | Rate per Cwt. |
|---|---|
| Anderson | 3.56 |
| Andrews | 3.35 |
| Angelina | 3.61 |
| Aransas | 3.69 |
| Archer | 3.45 |
| Armstrong | 3.38 |
| Atascosa | 3.61 |
| Austin | 3.66 |
| Bailey | 3.37 |
| Bandera | 3.57 |
| Bastrop | 3.56 |
| Baylor | 3.45 |
| Bee | 3.68 |
| Bell | 3.53 |
| Bexar | 3.56 |
| Blanco | 3.57 |
| Borden | 3.37 |
| Bosque | 3.49 |
| Bowie | 3.46 |
| Brazoria | 3.69 |
| Brazos | 3.60 |
| Brewster | 3.28 |
| Briscoe | 3.39 |
| Brooks | 3.67 |
| Brown | 3.47 |
| Burleson | 3.58 |
| Burnet | 3.56 |
| Caldwell | 3.57 |
| Calhoun | 3.65 |
| Callahan | 3.45 |
| Cameron | 3.73 |
| Camp | 3.47 |
| Carson | 3.38 |
| Cass | 3.46 |
| Castro | 3.37 |
| Chambers | 3.73 |
| Cherokee | 3.53 |
| Childress | 3.43 |
| Clay | 3.47 |
| Cochran | 3.37 |
| Coke | 3.43 |

1978 CROP SORGHUM LOAN AND PURCHASE PROGRAM SUPPLEMENT—Continued

TEXAS—Continued

| County | Rate per Cwt. |
|---|---|
| Coleman | 3.46 |
| Collin | 3.49 |
| Collingsworth | 3.42 |
| Colorado | 3.63 |
| Comal | 3.56 |
| Comanche | 3.49 |
| Concho | 3.47 |
| Cooke | 3.49 |
| Coryell | 3.50 |
| Cottle | 3.43 |
| Crane | 3.35 |
| Crockett | 3.33 |
| Crosby | 3.40 |
| Culberson | 3.28 |
| Dallam | 3.33 |
| Dallas | 3.49 |
| Dawson | 3.37 |
| Deaf Smith | 3.37 |
| Delta | 3.48 |
| Denton | 3.49 |
| DeWitt | 3.62 |
| Dickens | 3.43 |
| Dimmit | 3.50 |
| Donley | 3.38 |
| Duval | 3.64 |
| Eastland | 3.48 |
| Ector | 3.34 |
| Edwards | 3.47 |
| Ellis | 3.49 |
| El Paso | 3.28 |
| Erath | 3.49 |
| Falls | 3.55 |
| Fannin | 3.49 |
| Fayette | 3.58 |
| Fisher | 3.43 |
| Floyd | 3.39 |
| Foard | 3.43 |
| Fort Bend | 3.69 |
| Franklin | 3.47 |
| Freestone | 3.54 |
| Frio | 3.52 |
| Gaines | 3.37 |
| Galveston | 3.73 |
| Garza | 3.39 |
| Gillespsie | 3.55 |
| Glasscock | 3.37 |
| Goliad | 3.68 |
| Gonzales | 3.58 |
| Gray | 3.38 |
| Grayson | 3.50 |
| Gregg | 3.46 |
| Grimes | 3.65 |
| Guadalupe | 3.56 |
| Hale | 3.37 |
| Hall | 3.41 |
| Hamilton | 3.49 |
| Hansford | 3.33 |
| Hardeman | 3.43 |
| Hardin | 3.73 |
| Harris | 3.73 |
| Harrison | 3.47 |
| Hartley | 3.33 |
| Haskell | 3.45 |
| Hays | 3.56 |
| Hemphill | 3.36 |
| Henderson | 3.52 |
| Hidalgo | 3.70 |
| Hill | 3.50 |
| Hockley | 3.37 |
| Hood | 3.49 |
| Hopkins | 3.48 |
| Houston | 3.61 |
| Howard | 3.37 |
| Hudspeth | 3.29 |
| Hunt | 3.49 |
| Hutchinson | 3.33 |
| Irion | 3.39 |
| Jack | 3.49 |
| Jackson | 3.61 |
| Jasper | 3.63 |
| Jeff Davis | 3.29 |
| Jefferson | 3.73 |
| Jim Hogg | 3.64 |
| Jim Wells | 3.70 |
| Johnson | 3.49 |
| Jones | 3.45 |
| Karnes | 3.66 |
| Kaufman | 3.49 |
| Kendall | 3.57 |
| Kenedy | 3.67 |
| Kent | 3.43 |
| Kerr | 3.56 |

1978 CROP SORGHUM LOAN AND PURCHASE PROGRAM SUPPLEMENT—Continued

TEXAS—Continued

| County | Rate per Cwt. |
|---|---|
| Kimble | 3.51 |
| King | 3.43 |
| Kinney | 3.49 |
| Kleberg | 3.70 |
| Knox | 3.45 |
| Lamar | 3.48 |
| Lamb | 3.37 |
| Lampasas | 3.51 |
| La Salle | 3.53 |
| Lavaca | 3.59 |
| Lee | 3.58 |
| Leon | 3.56 |
| Liberty | 3.69 |
| Limestone | 3.54 |
| Lipscomb | 3.33 |
| Live Oak | 3.66 |
| Llano | 3.53 |
| Loving | 3.34 |
| Lubbock | 3.37 |
| Lynn | 3.37 |
| McCulloch | 3.47 |
| McLennan | 3.53 |
| McMullen | 3.57 |
| Madison | 3.60 |
| Marion | 3.47 |
| Martin | 3.37 |
| Mason | 3.51 |
| Matagorda | 3.67 |
| Maverick | 3.43 |
| Medina | 3.55 |
| Menard | 3.47 |
| Midland | 3.36 |
| Milam | 3.57 |
| Mills | 3.49 |
| Mitchell | 3.40 |
| Montague | 3.49 |
| Montgomery | 3.70 |
| Moore | 3.33 |
| Morris | 3.47 |
| Motley | 3.41 |
| Nacogdoches | 3.54 |
| Navarro | 3.53 |
| Newton | 3.63 |
| Nolan | 3.43 |
| Nueces | 3.73 |
| Ochiltree | 3.33 |
| Oldham | 3.37 |
| Orange | 3.69 |
| Palo Pinto | 3.49 |
| Panola | 3.53 |
| Parker | 3.49 |
| Parmer | 3.37 |
| Pecos | 3.33 |
| Polk | 3.66 |
| Potter | 3.37 |
| Presidio | 3.28 |
| Rains | 3.48 |
| Randall | 3.37 |
| Reagan | 3.36 |
| Real | 3.54 |
| Red River | 3.47 |
| Reeves | 3.35 |
| Refugio | 3.70 |
| Roberts | 3.34 |
| Robertson | 3.56 |
| Rockwall | 3.49 |
| Runnels | 3.44 |
| Rusk | 3.50 |
| Sabine | 3.58 |
| San Augustine | 3.58 |
| San Jacinto | 3.64 |
| San Patricio | 3.73 |
| San Saba | 3.48 |
| Schleicher | 3.40 |
| Scurry | 3.40 |
| Shackelford | 3.46 |
| Shelby | 3.54 |
| Sherman | 3.32 |
| Smith | 3.50 |
| Somervell | 3.49 |
| Starr | 3.66 |
| Stephens | 3.48 |
| Sterling | 3.39 |
| Stonewall | 3.45 |
| Sutton | 3.45 |
| Swisher | 3.37 |
| Tarrant | 3.49 |
| Taylor | 3.45 |
| Terrell | 3.33 |
| Terry | 3.37 |
| Throckmorton | 3.46 |
| Titus | 3.47 |

1978 CROP SORGHUM LOAN AND PURCHASE PROGRAM SUPPLEMENT—Continued

TEXAS—Continued

| County | Rate per Cwt. |
|---|---|
| Tom Green | 3.43 |
| Travis | 3.56 |
| Trinity | 3.62 |
| Tyler | 3.63 |
| Upshur | 3.47 |
| Upton | 3.34 |
| Uvalde | 3.54 |
| Val Verde | 3.44 |
| Van Zandt | 3.48 |
| Victoria | 3.65 |
| Walker | 3.65 |
| Waller | 3.67 |
| Ward | 3.35 |
| Washington | 3.66 |
| Webb | 3.51 |
| Wharton | 3.65 |
| Wheeler | 3.39 |
| Wichita | 3.44 |
| Wilbarger | 3.44 |
| Willacy | 3.72 |
| Williamson | 3.56 |
| Wilson | 3.61 |
| Winkler | 3.34 |
| Wise | 3.49 |
| Wood | 3.48 |
| Yoakum | 3.37 |
| Young | 3.48 |
| Zapata | 3.63 |
| Zavala | 3.48 |
| Weighted Avg. for State | 3.51 |
| **UTAH** | |
| All Counties | 3.28 |
| **VIRGINIA** | |
| All Counties | 3.42 |
| **WASHINGTON** | |
| All Counties | 3.30 |
| **WISCONSIN** | |
| All Counties | 3.19 |
| **WYOMING** | |
| All Counties | 3.20 |

(b) *Discounts.* The basic loan and purchase rates shall be adjusted as applicable by discounts as follows:

| | Cents per bushel |
|---|---|
| 1. Discounts apply per hundredweight-test, weight, in pounds: | |
| (i) 52.9 to 52.0 | −1 |
| (ii) 51.9 to 51.0 | −2 |
| 2. Total damaged kernels, percent: | |
| (i) 5.1 to 6.0 | −2 |
| (ii) 6.1 to 7.0 | −4 |
| (iii) 7.1 to 8.0 | −6 |
| (iv) 8.1 to 9.0 | −8 |
| (v) 9.1 to 10.0 | −10 |
| (vi) 10.1 to 11.0 | −12 |
| (vii) 11.1 to 12.0 | −14 |
| (viii) 12.1 to 13.0 | −16 |
| (ix) 13.1 to 14.0 | −18 |
| (x) 14.1 to 15.0 | −20 |
| 3. Heat damaged kernels, percent: | |
| (i) 0.51 to 1.00 | −2 |
| (ii) 1.01 to 2.00 | −6 |
| (iii) 2.01 to 3.00 | −10 |
| 4. Broken kernels, foreign material and other grains, percent: | |
| (i) 8.1 to 9.0 | −2 |
| (ii) 9.1 to 10.0 | −4 |
| (iii) 10.1 to 11.0 | −6 |
| (iv) 11.1 to 12.0 | −8 |
| (v) 12.1 to 13.0 | −10 |
| (vi) 13.1 to 14.0 | −12 |
| (vii) 14.1 to 15.0 | −14 |
| 5. Weed control law (where required by law § 421.24) | −15 |

(c) *Other.* Sorghum with quality factors exceeding limits shown in foregoing schedule or sorghum that (1) contains in excess of 14 percent moisture, (2) is weevily, (3) is musty, (4) sour, shall not be eligible for loan. In the event quantities of sorghum exceeding

limits shown are delivered in satisfaction of loan obligations, such quantities will be discounted on the basis of the schedule of discounts as provided by the Kansas City Commodity Office for settlement purposes. Such discounts will be established not later than the time delivery of sorghum to CCC begins and will thereafter be adjusted from time to time as CCC determines appropriate to reflect changes in market conditions. Producers may obtain schedules of such factors and discounts at county ASCS offices approximately one month prior to the loan maturity date.

Signed at Washington, D.C., on January 9, 1979.

STEWART N. SMITH,
*Acting Executive Vice President, Commodity Credit Corporation.*

[FR Doc. 79-1645 Filed 1-17-79; 8:45 am]

---

[3410-05-M]

[CCC Grain Price Support Regulations, 1978 Crop Soybean Supplement]

## PART 1421—GRAINS AND SIMILARLY HANDLED COMMODITIES

### Subpart—1978 Crop Soybean Loan and Purchase Program

AGENCY: Commodity Credit Corporation, Department of Agriculture.

ACTION: Final rule.

SUMMARY: The purpose of this rule is to set forth the: (1) Final loan and purchase availability dates, (2) maturity dates, and (3) loan and purchase rates and premiums and discounts under which Commodity Credit Corporation (CCC) will extend price support on 1978-crop soybeans. This rule is needed in order to provide a price support program for soybeans. This rule will enable eligible soybean producers to obtain loans and purchases on their eligible 1978-crop soybeans.

EFFECTIVE DATE: January 18, 1979.

ADDRESS: Price Support and Loan Division, ASCS, U.S. Department of Agriculture, 3732 South Building, P.O. Box 2415, Washington, D.C. 20013.

FOR FURTHER INFORMATION CONTACT:

Merle Strawderman, ASCS, (202) 447-7973.

SUPPLEMENTARY INFORMATION: A notice of proposed rulemaking was published in the FEDERAL REGISTER on December 21, 1977, 42 FR 56751, stating that the Department of Agriculture proposed to make determinations and issue regulations relative to a loan and purchase program for the 1978 crop of feed grains including soybeans. Such determinations included determining loan and purchase rates and other related program provisions. Forty-one responses were received: 23 recommendations pertained to loan rates, and 18 dealt with target prices. It has been determined that loan and purchase rates for 1978 crop soybeans on a national average will be $4.50 per bushel. The final availability date for purchases will be changed to May 31, 1979, the same as for loans.

Producers who wish to secure loans can do so by contacting their local Agricultural Stabilization and Conservation Service Office or Agricultural Service Center.

FINAL RULE

The General Regulations Governing Price Support for 1978 and Subsequent Crops, and any amendments thereto and the 1978 and Subsequent Crops Soybean Loan and Purchase Regulations, and any amendments thereto in this Part 1421 are further supplemented for the 1978 crop of soybeans. Accordingly, the regulations in 7 CFR § 1421.390 through § 1421.392 and the title of the subpart are revised to read as provided below, effective as to the 1978 crop of soybeans. The material previously appearing in these sections shall remain in full force and effect as to the crops to which it is applicable.

Subpart—1978 Crop Soybean Loan and Purchase Program

Sec.
1421.390 Availability.
1421.391 Maturity of loans.
1421.392 Warehouse charges.
1421.393 Loans and purchase rates, premiums and discounts.

AUTHORITY: Secs. 4 and 5, 62 Stat. 1070, as amended (15 U.S.C. 714b and c); secs. 201, 401, 63 Stat. 1051, as amended (7 U.S.C. 1446, 1421).

§ 1421.390 Availability.

(a) *Loans.* Producers desiring to participate in the program through loans must request a loan on their 1978 crop of eligible soybeans on or before May 31, 1979.

(b) *Purchasers.* A producer desiring to offer eligible 1978 crop soybeans not under loan for purchase must execute and deliver to the county ASCS office on or before May 31, 1979, a Purchase Agreement (Form CCC-614) indicating the approximate quantity of 1978 crop soybeans he will sell to CCC.

§ 1421.391 Maturity of loans.

Loans mature on demand but not later than the last day of the ninth calendar month following the month the loan is disbursed.

§ 1421.392 Warehouse charges.

If storage is not provided for through loan maturity, the county office shall deduct storage charges at the daily storage rate for the storing warehouse times the number of days from the date the commodity was received or date through which storage has been provided for to the maturity date.

§ 1421.393 Loans and purchase rates, premiums and discounts.

County basic loan and purchase rates for soybeans and the schedule of premiums and discounts are contained in this section. Farm stored loans will be made at the basic rate for the county where the soybeans are stored, adjusted only for the weed control discount where applicable. The rate for warehouse stored loans shall be the basic rate for the county where the soybeans are stored, adjusted by the premiums and discounts prescribed in paragraph (b) and (c) of this section. Notwithstanding § 1421.22(c), settlement for soybeans delivered from other than approved warehouse storage, shall be based (1) on the basic rate for the county in which the producer's customary delivery point is located, and (2) on the quality and quantity of the soybeans delivered as shown on the warehouse receipts and accompanying documents issued by an approved warehouse to which delivery is made, or if applicable, the quality and quantity delivered as shown on a form prescribed by CCC for this purpose.

(a) *Basic county rates.* Basic county rates for the classes Green or Yellow Soybeans containing 12.8 to 13 percent moisture and grading not lower than U.S. No. 2 on the factors of test weight, splits, and heat damage and U.S. No.1 on all other factors are as follows:

1978 CROP SOYBEAN LOAN AND PURCHASE PROGRAM SUPPLEMENT

*1978 Crop Soybeans*

| County | Rate per bushel |
|---|---|
| ALABAMA | |
| All Counties | $4.47 |
| ARIZONA | |
| All Counties | 4.36 |
| ARKANSAS | |
| Arkansas | 4.54 |
| Ashley | 4.53 |
| Baxter | 4.49 |
| Benton | 4.43 |
| Boone | 4.46 |
| Bradley | 4.53 |
| Calhoun | 4.51 |
| Carroll | 4.45 |
| Chicot | 4.53 |
| Clark | 4.49 |
| Clay | 4.53 |
| Cleburne | 4.50 |
| Cleveland | 4.53 |
| Columbia | 4.49 |
| Conway | 4.50 |
| Craighead | 4.52 |

1978 CROP SOYBEAN LOAN AND PURCHASE PROGRAM SUPPLEMENT—Continued

| County | Rate per bushel |
|---|---|
| Crawford | 4.46 |
| Crittenden | 4.54 |
| Cross | 4.54 |
| Dallas | 4.51 |
| Desha | 4.53 |
| Drew | 4.53 |
| Faulkner | 4.51 |
| Franklin | 4.47 |
| Fulton | 4.50 |
| Garland | 4.49 |
| Grant | 4.51 |
| Greene | 4.53 |
| Hempstead | 4.46 |
| Hot Spring | 4.50 |
| Howard | 4.45 |
| Independence | 4.50 |
| Izard | 4.50 |
| Jackson | 4.52 |
| Jefferson | 4.52 |
| Johnson | 4.48 |
| Lafayette | 4.46 |
| Lawrence | 4.52 |
| Lee | 4.54 |
| Lincoln | 4.53 |
| Little River | 4.46 |
| Logan | 4.47 |
| Lonoke | 4.53 |
| Madison | 4.45 |
| Marion | 4.48 |
| Miller | 4.46 |
| Mississippi | 4.54 |
| Monroe | 4.54 |
| Montgomery | 4.46 |
| Nevada | 4.48 |
| Newton | 4.46 |
| Ouachita | 4.50 |
| Perry | 4.50 |
| Phillips | 4.54 |
| Pike | 4.46 |
| Poinsett | 4.52 |
| Polk | 4.46 |
| Pope | 4.49 |
| Prairie | 4.54 |
| Pulaski | 4.51 |
| Randolph | 4.52 |
| St. Francis | 4.54 |
| Saline | 4.50 |
| Scott | 4.46 |
| Searcy | 4.48 |
| Sebastian | 4.46 |
| Sevier | 4.45 |
| Sharp | 4.52 |
| Stone | 4.50 |
| Union | 4.51 |
| Van Buren | 4.49 |
| Washington | 4.44 |
| White | 4.51 |
| Woodruff | 4.54 |
| Yell | 4.48 |
| **CALIFORNIA** | |
| All Counties | 4.36 |
| **COLORADO** | |
| All Counties | 4.49 |
| **DELAWARE** | |
| All Counties | 4.47 |
| **FLORIDA** | |
| All Counties | 4.47 |
| **GEORGIA** | |
| All Counties | 4.47 |
| **ILLINOIS** | |
| Adams | 4.55 |
| Alexander | 4.55 |
| Bond | 4.57 |
| Boone | 4.54 |
| Brown | 4.56 |
| Bureau | 4.54 |
| Calhoun | 4.55 |
| Carroll | 4.52 |
| Cass | 4.57 |
| Champaign | 4.58 |
| Christian | 4.58 |
| Clark | 4.57 |
| Clay | 4.56 |
| Clinton | 4.55 |
| Coles | 4.57 |

1978 CROP SOYBEAN LOAN AND PURCHASE PROGRAM SUPPLEMENT—Continued

| County | Rate per bushel |
|---|---|
| Cook | 4.58 |
| Crawford | 4.56 |
| Cumberland | 4.57 |
| De Kalb | 4.56 |
| De Witt | 4.58 |
| Douglas | 4.57 |
| Du Page | 4.58 |
| Edgar | 4.57 |
| Edwards | 4.51 |
| Effingham | 4.57 |
| Fayette | 4.57 |
| Ford | 4.58 |
| Franklin | 4.51 |
| Fulton | 4.56 |
| Gallatin | 4.50 |
| Greene | 4.56 |
| Grundy | 4.58 |
| Hamilton | 4.51 |
| Hancock | 4.55 |
| Hardin | 4.50 |
| Henderson | 4.54 |
| Henry | 4.54 |
| Iroquois | 4.58 |
| Jackson | 4.55 |
| Jasper | 4.57 |
| Jefferson | 4.52 |
| Jersey | 4.55 |
| Jo Daviess | 4.52 |
| Johnson | 4.53 |
| Kane | 4.57 |
| Kankakee | 4.58 |
| Kendall | 4.57 |
| Knox | 4.56 |
| Lake | 4.57 |
| LaSalle | 4.56 |
| Lawrence | 4.54 |
| Lee | 4.54 |
| Livingston | 4.58 |
| Logan | 4.58 |
| McDonough | 4.56 |
| McHenry | 4.55 |
| McLean | 4.58 |
| Macon | 4.58 |
| Macoupin | 4.57 |
| Madison | 4.56 |
| Marion | 4.56 |
| Marshall | 4.58 |
| Mason | 4.57 |
| Massac | 4.49 |
| Menard | 4.57 |
| Mercer | 4.53 |
| Monroe | 4.55 |
| Montgomery | 4.57 |
| Morgan | 4.57 |
| Moultrie | 4.57 |
| Ogle | 4.54 |
| Peoria | 4.57 |
| Perry | 4.54 |
| Piatt | 4.58 |
| Pike | 4.55 |
| Pope | 4.50 |
| Pulaski | 4.53 |
| Putnam | 4.54 |
| Randolph | 4.55 |
| Richland | 4.55 |
| Rock Island | 4.52 |
| St. Clair | 4.55 |
| Saline | 4.55 |
| Sangamon | 4.58 |
| Schuyler | 4.56 |
| Scott | 4.57 |
| Shelby | 4.57 |
| Stark | 4.57 |
| Stephenson | 4.52 |
| Tazewell | 4.58 |
| Union | 4.55 |
| Vermilion | 4.58 |
| Wabash | 4.51 |
| Warren | 4.56 |
| Washington | 4.55 |
| Wayne | 4.52 |
| White | 4.50 |
| Whiteside | 4.52 |
| Will | 4.58 |
| Williamson | 4.53 |
| Winnebago | 4.53 |
| Woodford | 4.58 |

1978 CROP SOYBEAN LOAN AND PURCHASE PROGRAM SUPPLEMENT—Continued

| County | Rate per bushel |
|---|---|
| **INDIANA** | |
| Adams | 4.52 |
| Allen | 4.52 |
| Bartholomew | 4.52 |
| Benton | 4.57 |
| Blackford | 4.52 |
| Boone | 4.53 |
| Brown | 4.52 |
| Carroll | 4.53 |
| Cass | 4.53 |
| Clark | 4.52 |
| Clay | 4.54 |
| Clinton | 4.53 |
| Crawford | 4.53 |
| Daviess | 4.52 |
| Dearborn | 4.52 |
| Decatur | 4.52 |
| De Kalb | 4.52 |
| Delaware | 4.52 |
| Dubois | 4.52 |
| Elkhart | 4.52 |
| Fayette | 4.52 |
| Floyd | 4.52 |
| Fountain | 4.57 |
| Franklin | 4.52 |
| Fulton | 4.53 |
| Gibson | 4.52 |
| Grant | 4.52 |
| Greene | 4.53 |
| Hamilton | 4.53 |
| Hancock | 4.52 |
| Harrison | 4.53 |
| Hendricks | 4.52 |
| Henry | 4.52 |
| Howard | 4.53 |
| Huntington | 4.52 |
| Jackson | 4.52 |
| Jasper | 4.56 |
| Jay | 4.52 |
| Jefferson | 4.52 |
| Jennings | 4.52 |
| Johnson | 4.52 |
| Knox | 4.52 |
| Kosciusko | 4.52 |
| Lagrange | 4.52 |
| Lake | 4.56 |
| La Porte | 4.55 |
| Lawrence | 4.52 |
| Madison | 4.52 |
| Marion | 4.53 |
| Marshall | 4.53 |
| Martin | 4.52 |
| Miami | 4.53 |
| Monroe | 4.52 |
| Montgomery | 4.54 |
| Morgan | 4.52 |
| Newton | 4.57 |
| Noble | 4.52 |
| Ohio | 4.52 |
| Orange | 4.52 |
| Owen | 4.53 |
| Parke | 4.55 |
| Perry | 4.53 |
| Pike | 4.52 |
| Porter | 4.57 |
| Posey | 4.53 |
| Pulaski | 4.55 |
| Putnam | 4.54 |
| Randolph | 4.52 |
| Ripley | 4.52 |
| Rush | 4.52 |
| St. Joseph | 4.53 |
| Scott | 4.52 |
| Shelby | 4.52 |
| Spencer | 4.53 |
| Starke | 4.55 |
| Steuben | 4.52 |
| Sullivan | 4.54 |
| Switzerland | 4.52 |
| Tippecanoe | 4.55 |
| Tipton | 4.53 |
| Union | 4.52 |
| Vanderburgh | 4.53 |
| Vermillion | 4.57 |
| Vigo | 4.56 |
| Wabash | 4.52 |
| Warren | 4.57 |
| Warrick | 4.53 |
| Washington | 4.52 |

1978 CROP SOYBEAN LOAN AND PURCHASE PROGRAM SUPPLEMENT—Continued

| County | Rate per bushel |
|---|---|
| Wayne | 4.52 |
| Wells | 4.52 |
| White | 4.55 |
| Whitley | 4.52 |
| **IOWA** | |
| Adair | 4.46 |
| Adams | 4.46 |
| Allamakee | 4.47 |
| Appanoose | 4.49 |
| Audubon | 4.45 |
| Benton | 4.50 |
| Black Hawk | 4.47 |
| Boone | 4.47 |
| Bremer | 4.46 |
| Buchanan | 4.48 |
| Buena Vista | 4.45 |
| Butler | 4.46 |
| Calhoun | 4.45 |
| Carroll | 4.45 |
| Cass | 4.46 |
| Cedar | 4.51 |
| Cerro Gordo | 4.46 |
| Cherokee | 4.45 |
| Chickasaw | 4.46 |
| Clarke | 4.48 |
| Clay | 4.45 |
| Clayton | 4.48 |
| Clinton | 4.52 |
| Crawford | 4.45 |
| Dallas | 4.47 |
| Davis | 4.51 |
| Decatur | 4.48 |
| Delaware | 4.48 |
| Des Moines | 4.54 |
| Dickinson | 4.45 |
| Dubuque | 4.49 |
| Emmet | 4.45 |
| Fayette | 4.47 |
| Floyd | 4.45 |
| Franklin | 4.47 |
| Fremont | 4.45 |
| Greene | 4.45 |
| Grundy | 4.48 |
| Guthrie | 4.45 |
| Hamilton | 4.47 |
| Hancock | 4.46 |
| Hardin | 4.48 |
| Harrison | 4.44 |
| Henry | 4.53 |
| Howard | 4.46 |
| Humboldt | 4.46 |
| Ida | 4.45 |
| Iowa | 4.50 |
| Jackson | 4.52 |
| Jasper | 4.49 |
| Jefferson | 4.52 |
| Johnson | 4.50 |
| Jones | 4.51 |
| Keokuk | 4.52 |
| Kossuth | 4.46 |
| Lee | 4.54 |
| Linn | 4.50 |
| Louisa | 4.53 |
| Lucas | 4.49 |
| Lyon | 4.44 |
| Madison | 4.47 |
| Mahaska | 4.51 |
| Marion | 4.49 |
| Marshall | 4.49 |
| Mills | 4.45 |
| Mitchell | 4.45 |
| Monona | 4.44 |
| Monroe | 4.49 |
| Montgomery | 4.45 |
| Muscatine | 4.52 |
| O'Brien | 4.45 |
| Osceola | 4.45 |
| Page | 4.45 |
| Palo Alto | 4.45 |
| Plymouth | 4.44 |
| Pocahontas | 4.45 |
| Polk | 4.48 |
| Pottawattamie | 4.45 |
| Poweshiek | 4.50 |
| Ringgold | 4.47 |
| Sac | 4.45 |
| Scott | 4.52 |
| Shelby | 4.45 |

1978 CROP SOYBEAN LOAN AND PURCHASE PROGRAM SUPPLEMENT—Continued

| County | Rate per bushel |
|---|---|
| Sioux | 4.44 |
| Story | 4.48 |
| Tama | 4.50 |
| Taylor | 4.46 |
| Union | 4.47 |
| Van Buren | 4.53 |
| Wapello | 4.51 |
| Warren | 4.48 |
| Washington | 4.53 |
| Wayne | 4.49 |
| Webster | 4.47 |
| Winnebago | 4.46 |
| Winneshiek | 4.47 |
| Woodbury | 4.44 |
| Worth | 4.46 |
| Wright | 4.46 |
| **KANSAS** | |
| All Counties | 4.43 |
| **KENTUCKY** | |
| All Counties | 4.51 |
| **LOUISIANA** | |
| All Counties | 4.51 |
| **MARYLAND** | |
| All Counties | 4.47 |
| **MICHIGAN** | |
| Allegan | 4.44 |
| Arenac | 4.44 |
| Barry | 4.44 |
| Bay | 4.44 |
| Berrien | 4.49 |
| Branch | 4.48 |
| Calhoun | 4.46 |
| Cass | 4.49 |
| Clinton | 4.44 |
| Eaton | 4.45 |
| Genesee | 4.44 |
| Gladwin | 4.44 |
| Gratiot | 4.44 |
| Hillsdale | 4.49 |
| Huron | 4.44 |
| Ingham | 4.45 |
| Ionia | 4.44 |
| Isabella | 4.44 |
| Jackson | 4.47 |
| Kalamazoo | 4.46 |
| Lapeer | 4.44 |
| Lenawee | 4.49 |
| Livingston | 4.45 |
| Macomb | 4.45 |
| Midland | 4.44 |
| Monroe | 4.50 |
| Montcalm | 4.44 |
| Oakland | 4.45 |
| Saginaw | 4.44 |
| Saint Clair | 4.44 |
| St. Joseph | 4.48 |
| Sanilac | 4.44 |
| Shiawassee | 4.44 |
| Tuscola | 4.44 |
| Van Buren | 4.46 |
| Washtenaw | 4.47 |
| Wayne | 4.47 |
| All Other Counties | 4.43 |
| **MINNESOTA** | |
| Aitkin | 4.38 |
| Anoka | 4.45 |
| Becker | 4.39 |
| Beltrami | 4.38 |
| Benton | 4.42 |
| Big Stone | 4.42 |
| Blue Earth | 4.47 |
| Brown | 4.46 |
| Carlton | 4.39 |
| Carver | 4.47 |
| Cass | 4.38 |
| Chippewa | 4.44 |
| Chisago | 4.42 |
| Clay | 4.39 |
| Clearwater | 4.38 |
| Cottonwood | 4.43 |
| Crow Wing | 4.38 |
| Dakota | 4.47 |
| Dodge | 4.45 |
| Douglas | 4.41 |
| Faribault | 4.46 |

1978 CROP SOYBEAN LOAN AND PURCHASE PROGRAM SUPPLEMENT—Continued

| County | Rate per bushel |
|---|---|
| Fillmore | 4.45 |
| Freeborn | 4.46 |
| Goodhue | 4.45 |
| Grant | 4.41 |
| Hennepin | 4.47 |
| Houston | 4.45 |
| Hubbard | 4.39 |
| Isanti | 4.42 |
| Itasca | 4.38 |
| Jackson | 4.43 |
| Kanabec | 4.40 |
| Kandiyohi | 4.43 |
| Kittson | 4.36 |
| Koochiching | 4.38 |
| Lac Qui Parle | 4.44 |
| Lake of the Woods | 4.37 |
| Le Sueur | 4.47 |
| Lincoln | 4.41 |
| Lyon | 4.42 |
| McLeod | 4.46 |
| Mahnomen | 4.38 |
| Marshall | 4.36 |
| Martin | 4.45 |
| Meeker | 4.44 |
| Mille Lacs | 4.40 |
| Morrison | 4.40 |
| Mower | 4.45 |
| Murray | 4.42 |
| Nicollet | 4.47 |
| Nobles | 4.43 |
| Norman | 4.38 |
| Olmsted | 4.45 |
| Otter Tail | 4.39 |
| Pennington | 4.37 |
| Pine | 4.40 |
| Pipestone | 4.41 |
| Polk | 4.37 |
| Pope | 4.42 |
| Ramsey | 4.47 |
| Red Lake | 4.37 |
| Redwood | 4.43 |
| Renville | 4.44 |
| Rice | 4.46 |
| Rock | 4.42 |
| Roseau | 4.36 |
| Scott | 4.47 |
| Sherburne | 4.45 |
| Sibley | 4.47 |
| Stearns | 4.42 |
| Steele | 4.46 |
| Stevens | 4.42 |
| Swift | 4.42 |
| Todd | 4.40 |
| Traverse | 4.41 |
| Wabasha | 4.45 |
| Wadena | 4.39 |
| Waseca | 4.46 |
| Washington | 4.45 |
| Watonwan | 4.46 |
| Wilkin | 4.39 |
| Winona | 4.45 |
| Wright | 4.45 |
| Yellow Medicine | 4.45 |
| **MISSISSIPPI** | |
| All Counties | 4.53 |
| **MISSOURI** | |
| Adair | 4.50 |
| Andrew | 4.46 |
| Atchison | 4.46 |
| Audrain | 4.52 |
| Barry | 4.45 |
| Barton | 4.45 |
| Bates | 4.45 |
| Benton | 4.46 |
| Bollinger | 4.54 |
| Boone | 4.49 |
| Buchanan | 4.46 |
| Butler | 4.52 |
| Caldwell | 4.46 |
| Callaway | 4.49 |
| Camden | 4.47 |
| Cape Girardeau | 4.54 |
| Carroll | 4.48 |
| Carter | 4.50 |
| Cass | 4.45 |
| Cedar | 4.44 |
| Chariton | 4.49 |
| Christian | 4.46 |

1978 CROP SOYBEAN LOAN AND PURCHASE PROGRAM SUPPLEMENT—Continued

| County | Rate per bushel |
|---|---|
| Clark | 4.54 |
| Clay | 4.46 |
| Clinton | 4.46 |
| Cole | 4.48 |
| Cooper | 4.48 |
| Crawford | 4.50 |
| Dade | 4.45 |
| Dallas | 4.46 |
| Daviess | 4.46 |
| De Kalb | 4.46 |
| Dent | 4.50 |
| Douglas | 4.46 |
| Dunklin | 4.54 |
| Franklin | 4.52 |
| Gasconade | 4.50 |
| Gentry | 4.46 |
| Greene | 4.46 |
| Grundy | 4.48 |
| Harrison | 4.46 |
| Henry | 4.45 |
| Hickory | 4.46 |
| Holt | 4.46 |
| Howard | 4.48 |
| Howell | 4.48 |
| Iron | 4.52 |
| Jackson | 4.45 |
| Jasper | 4.45 |
| Jefferson | 4.54 |
| Johnson | 4.45 |
| Knox | 4.52 |
| Laclede | 4.46 |
| Lafayette | 4.45 |
| Lawrence | 4.45 |
| Lewis | 4.54 |
| Lincoln | 4.53 |
| Linn | 4.49 |
| Livingston | 4.48 |
| McDonald | 4.45 |
| Macon | 4.50 |
| Madison | 4.52 |
| Maries | 4.48 |
| Marion | 4.54 |
| Mercer | 4.48 |
| Miller | 4.47 |
| Mississippi | 4.54 |
| Moniteau | 4.48 |
| Monroe | 4.52 |
| Montgomery | 4.50 |
| Morgan | 4.47 |
| New Madrid | 4.54 |
| Newton | 4.45 |
| Nodaway | 4.46 |
| Oregon | 4.50 |
| Osage | 4.48 |
| Ozark | 4.47 |
| Pemiscot | 4.54 |
| Perry | 4.54 |
| Pettis | 4.47 |
| Phelps | 4.48 |
| Pike | 4.54 |
| Platte | 4.46 |
| Polk | 4.46 |
| Pulaski | 4.47 |
| Putnam | 4.49 |
| Ralls | 4.54 |
| Randolph | 4.50 |
| Ray | 4.46 |
| Reynolds | 4.50 |
| Ripley | 4.50 |
| Saint Charles | 4.53 |
| Saint Clair | 4.45 |
| Saint Francois | 4.52 |
| Sainte Genevieve | 4.54 |
| Saint Louis | 4.54 |
| Saline | 4.47 |
| Schuyler | 4.50 |
| Scotland | 4.52 |
| Scott | 4.54 |
| Shannon | 4.50 |
| Shelby | 4.52 |
| Stoddard | 4.54 |
| Stone | 4.46 |
| Sullivan | 4.49 |
| Taney | 4.46 |
| Texas | 4.48 |
| Vernon | 4.44 |
| Warren | 4.51 |
| Washington | 4.52 |
| Wayne | 4.52 |

1978 CROP SOYBEAN LOAN AND PURCHASE PROGRAM SUPPLEMENT—Continued

| County | Rate per bushel |
|---|---|
| Webster | 4.46 |
| Worth | 4.46 |
| Wright | 4.46 |
| MONTANA | |
| All Counties | 4.36 |
| NEBRASKA | |
| All Counties | 4.41 |
| NEW JERSEY | |
| All Counties | 4.45 |
| NEW MEXICO | |
| All Counties | 4.36 |
| NEW YORK | |
| All Counties | 4.37 |
| NORTH CAROLINA | |
| All Counties | 4.47 |
| NORTH DAKOTA | |
| All Counties | 4.36 |
| OHIO | |
| Adams | 4.52 |
| Allen | 4.53 |
| Ashland | 4.52 |
| Ashtabula | 4.50 |
| Athens | 4.52 |
| Auglaize | 4.53 |
| Belmont | 4.52 |
| Brown | 4.52 |
| Butler | 4.52 |
| Carroll | 4.50 |
| Champaign | 4.52 |
| Clark | 4.51 |
| Clermont | 4.52 |
| Clinton | 4.52 |
| Columbiana | 4.50 |
| Coshocton | 4.50 |
| Crawford | 4.52 |
| Cuyahoga | 4.50 |
| Darke | 4.51 |
| Defiance | 4.52 |
| Delaware | 4.51 |
| Erie | 4.52 |
| Fairfield | 4.52 |
| Fayette | 4.52 |
| Franklin | 4.51 |
| Fulton | 4.54 |
| Gallia | 4.52 |
| Geauga | 4.50 |
| Greene | 4.51 |
| Guernsey | 4.52 |
| Hamilton | 4.52 |
| Hancock | 4.53 |
| Hardin | 4.54 |
| Harrison | 4.50 |
| Henry | 4.54 |
| Highland | 4.52 |
| Hocking | 4.52 |
| Holmes | 4.50 |
| Huron | 4.52 |
| Jackson | 4.52 |
| Jefferson | 4.50 |
| Knox | 4.50 |
| Lake | 4.50 |
| Lawrence | 4.52 |
| Licking | 4.50 |
| Logan | 4.53 |
| Lorain | 4.52 |
| Lucas | 4.55 |
| Madison | 4.51 |
| Mahoning | 4.50 |
| Marion | 4.53 |
| Medina | 4.52 |
| Meigs | 4.52 |
| Mercer | 4.52 |
| Miami | 4.51 |
| Monroe | 4.52 |
| Montgomery | 4.51 |
| Morgan | 4.52 |
| Morrow | 4.52 |
| Muskingum | 4.52 |
| Noble | 4.52 |
| Ottawa | 4.53 |
| Paulding | 4.52 |
| Perry | 4.52 |
| Pickaway | 4.52 |
| Pike | 4.52 |

1978 CROP SOYBEAN LOAN AND PURCHASE PROGRAM SUPPLEMENT—Continued

| County | Rate per bushel |
|---|---|
| Portage | 4.50 |
| Preble | 4.51 |
| Putnam | 4.53 |
| Richland | 4.52 |
| Ross | 4.52 |
| Sandusky | 4.53 |
| Scioto | 4.52 |
| Seneca | 4.53 |
| Shelby | 4.52 |
| Stark | 4.50 |
| Summit | 4.50 |
| Trumbull | 4.50 |
| Tuscarawas | 4.50 |
| Union | 4.51 |
| Van Wert | 4.52 |
| Vinton | 4.52 |
| Warren | 4.52 |
| Washington | 4.52 |
| Wayne | 4.50 |
| Williams | 4.52 |
| Wood | 4.54 |
| Wyandot | 4.53 |
| OKLAHOMA | |
| All Counties | 4.39 |
| PENNSYLVANIA | |
| All Counties | 4.43 |
| SOUTH CAROLINA | |
| All Counties | 4.47 |
| SOUTH DAKOTA | |
| All Counties | 4.39 |
| TENNESSEE | |
| All Counties | 4.47 |
| TEXAS | |
| All Counties | 4.39 |
| VERMONT | |
| All Counties | 4.36 |
| VIRGINIA | |
| All Counties | 4.47 |
| WEST VIRGINIA | |
| All Counties | 4.45 |
| WISCONSIN | |
| All Counties | 4.43 |

(b) *Premiums and discounts.* The basic loan and purchase rates shall be adjusted as applicable by premiums and discounts as follows (all footnotes at end of paragraph):

| | Cents per bushel |
|---|---|
| 1. Premiums—Moisture (percent): | |
| 12.2 or less | +7.5 |
| 12.3 through 12.7 | +3.5 |
| 2. Discounts: | |
| (a) Class: | |
| Black | −25 |
| Brown | −25 |
| Mixed | −25 |
| (b) Mositure: | |
| 13.1 through 13.5 | −3.5 |
| 13.6 through 14.0 | −7.0 |
| (c) Test weight per bushel (pounds): | |
| 53.9 to 53.0 | −0.5 |
| 52.9 to 52.0 | −1.0 |
| 51.9 to 51.0 | −1.5 |
| 50.9 to 50.0 | −2.0 |
| 49.9 to 49.0 | −2.5 |
| (d) Splits: | |
| 20.1 to 25.0 | −0.25 |
| 25.1 to 30.0 | −0.50 |
| 30.1 to 35.0 | −0.75 |
| 35.1 to 40.0 | −1.00 |
| (e) Damaged kernels: | |
| (1) Heat damage (percent): | |
| 0.6 to 1.0 | −1.0 |
| 1.1 to 1.5 | −2.0 |
| 1.6 to 2.0 | −3.0 |
| 2.1 to 2.5 | −4.0 |
| 2.6 to 3.0 | −5.0 |

| | Cents per bushel |
|---|---|
| (2) Total damage: | |
| 2.1 to 3.0 | −1.0 |
| 3.1 to 4.0 | −2.0 |
| 4.1 to 5.0 | −3.0 |
| 5.1 to 6.0 | −5.0 |
| 6.1 to 7.0 | −7.0 |
| 7.1 to 8.0 | −9.0 |
| (f) Black, brown, and/or bicolored soybeans in yellow or green soybeans: | |
| 1.1 to 2.0 | −0.5 |
| 2.1 to 5.0 | −1.5 |
| 5.1 to 10.0 | −3.5 |
| (g) Special factors: | |
| (1) Materially weathered | −5.0 |
| (2) Stained | −2.0 |
| (3) Purple mottled | −2.0 |
| (4) Weed control laws (where required by § 1421.25 | −10 |

(c) *Other.* Soybeans with quality factors exceeding limits shown in foregoing schedules or soybeans that (1) contain in excess of 14 percent moisture, (2) is weevily, (3) is musty, (4) sour, shall not be eligible for loan. In the event quantities of soybeans exceeding limits shown are delivered in satisfaction of loan obligations, such quantities will be discounted on the basis of the schedule of discounts as provided by the Kansas City Commodity Office for settlement purposes. Such discounts will be established not later than the time delivery of soybeans to CCC begins and will thereafter be adjusted from time to time as CCC determines appropriate to reflect changes in market conditions. Procedures may obtain schedules of such factors and discounts at county ASCS offices approximately one month prior to the loan maturity date.

Signed at Washington, D.C., on January 9, 1979.

STEWART N. SMITH,
*Acting Executive Vice President, Commodity Credit Corporation.*

[FR Doc. 79—1644 Filed 1-17-79; 8:45 am]

[4910-13-M]

## Title 14—Aeronautics and Space

## CHAPTER I—FEDERAL AVIATION ADMINISTRATION, DEPARTMENT OF TRANSPORTATION

[Docket No. 17939; Amdt. 39-3396]

## PART 39—AIRWORTHINESS DIRECTIVES

### Agusta Model A109 and A109A Helicopters

AGENCY: Federal Aviation Administration (FAA), DOT.

ACTION: Final rule.

SUMMARY: This amendment adopts a new airworthiness directive (AD) that would require inspections and replacement of the tail rotor drive shaft hanger bearing support bracket on Costruzioni Aeronautiche Giovanni Agusta Model A109 and A109A helicopters. The AD is needed because the affected bracket is subject to cracking which could result in the failure of the tail rotor.

DATES: Effective February 19, 1979. Compliance schedule—As prescribed in body of AD.

ADDRESSES: The applicable service bulletin may be obtained from: Costruzioni Aeronautiche Giovanni Agusta, Cascina Costa (Gallarate), Italy. A copy of the service bulletin is contained in the Rules Docket, Rm. 916, 800 Independence Avenue, S.W., Washington, D.C. 20591.

FOR FURTHER INFORMATION CONTACT:

D. C. Jacobsen, Chief, Aircraft Certification Staff, AEU-100, Europe, Africa, and Middle East Region, Federal Aviation Administration, c/o American Embassy, Brussels, Belgium, telephone 513.38.30. Chris Christie, AFS-110, Engineering & Mfg. Div., FAA, telephone 202-426-8374.

SUPPLEMENTARY INFORMATION: A proposal to amend Part 39 of the Federal Aviation Regulations to include an airworthiness directive requiring inspections and replacement of the tail rotor drive shaft hanger bearing support bracket on certain Costruzioni Aeronautiche Giovanni Agusta Model A109 and A109A helicopters was published in the FEDERAL REGISTER at 43 FR 24850; June 8, 1978.

The proposal was prompted by an FAA determination that the tail rotor drive shaft hanger bearing support bracket, P/N 109-0370-02-1, on Agusta Models A-109 and A-109A helicopters is subject to cracking which could result in failure of the tail rotor.

Interested persons have been afforded an opportunity to participate in the making of the amendment. One comment was received, and disagreed with the necessity for issuing an airworthiness directive on the basis that none of the affected helicopters was on the U.S. Registry, and that voluntary compliance would be shown for all other affected helicopters. However, voluntary compliance with a manufacturer's service bulletin does not relieve the FAA from taking Airworthiness Directive action as appropriate.

The amendment therefore is adopted as proposed with the exception of minor clarifying changes.

ADOPTION OF THE AMENDMENT

Accordingly, pursuant to the authority delegated to me by the Administrator; § 39.13 of Part 39 of the Federal Aviation Regulations (14 CFR 39.13) is amended by adding the following new airworthiness directive:

COSTRUZIONI AERONAUTICHE GIOVANNI AGUSTA. Applies to Model A109 and A109A helicopters, serial numbers 7109 and below, certificated in all categories, incorporating tail rotor drive shaft hanger bearing support bracket P/N 109-0370-02-1.

Compliance is required as indicated, unless already accomplished.

To prevent a possible tail rotor failure, accomplish the following:

(a) Within the next 10 hours time in service after the effective date of this AD, and thereafter following the last flight of each day in which the helicopter is operated, inspect the tail rotor drive shaft hanger bearing support bracket, P/N 109-0370-02-1, for cracks in accordance with Part I of the "Accomplishment" paragraph of Agusta Bollettino Tecnico No. 109-2, dated April 14, 1976, including Rev. A dated May 11, 1976, or an FAA-approved equivalent. (Hereinafter referred to as Service Bulletin.)

(b) If a crack is found during an inspection required by this AD, before further flight, except as provided in paragraph (d) of this AD, replace the affected bracket with—

(1) A serviceable bracket of the same part number, and continue to inspect in accordance with paragraph (a) of this AD after the last flight of each day in which the helicopter is operated; or,

(2) A new support bracket, P/N 109-0370-12-1, in accordance with Part II of the "Accomplishment" paragraph of the Service Bulletin.

(c) Within the next 100 hours time in service after the effective date of this AD, replace support bracket, P/N 109-0370-02-1 with a new bracket, P/N 109-0370-12-1, in accordance with Part II of the "Accomplishment" paragraph of the Service Bulletin. The repetitive inspections required by paragraphs (a) and (b)(1) of this AD may be discontinued upon the installation of a support bracket, P/N 109-0370-12-1, in accordance with this AD.

(d) Helicopters may be flown in accordance with FAR's 21.197 and 21.199 to a base where the required work can be performed.

This amendment becomes effective February 19, 1979.

(Secs. 313(a), 601, and 603, Federal Aviation Act of 1958, as amended, (49 U.S.C. 1354(a), 1421, and 1423); Sec. 6(c), Department of Transportation Act (49 U.S.C. 1655(c)); 14 CFR 11.89.)

Issued in Washington, D.C., on January 8, 1979.

J. A. FERRARESE,
*Acting Director, Flight Standards Service.*

[FR Doc. 79-1729 Filed 1-17-79; 8:45 am]

[4910-13-M]

[Docket No. 17526; Amdt. 39-3399]

## PART 39—AIRWORTHINESS DIRECTIVES

### Hawker Siddeley Aviation, Ltd. (British Aerospace) Model DH-104 Dove Airplanes

AGENCY: Federal Aviation Administration (FAA), DOT.

ACTION: Final rule.

SUMMARY: This amendment adopts a new airworthiness directive (AD) which requires repetitive inspections of the center section main spar top boom and replacement of the boom as necessary on Hawker Siddeley Aviation, Limited Model DH-104 "Dove" airplanes. The AD is needed to detect cracks in the lugs at each end of the boom which could result in separation of the wing in flight.

DATES: Effective February 19, 1979. Compliance schedule—as prescribed in body of AD.

ADDRESSES: The applicable technical news sheet may be obtained from: Hawker Siddeley Aviation, Limited, Hatfield Hertfordshire, England, Product Support Department. Telephone: Hatfield 62345. A copy of the technical news sheet is contained in the Rules Docket, Room 916, 800 Independence Avenue, S.W., Washington, D.C. 20591.

FOR FURTHER INFORMATION CONTACT:

D. C. Jacobsen, Chief, Aircraft Certification Staff, AEU-100, Europe, Africa and Middle East Region, Federal Aviation Administration, c/o American Embassy, Brussels, Belgium, Telephone: 513.38.30. Chris Christie, FAA, Eng. & Mfg. Div., AFS-110, Washington, D.C. Telephone: 202-426-8374.

SUPPLEMENTARY INFORMATION: A proposal to amend Part 39 of the Federal Aviation Regulations to include an airworthiness directive requiring repetitive inspection and replacement as necessary of the center lug of the three lugs located at each end of the center section main spar top boom on Hawker Siddeley Aviation, Limited Model DH-104 Dove airplanes was published in the FEDERAL REGISTER at 43 FR 974. The proposal was prompted by reports of cracks in the center section main spar boom which affect the structural integrity of the wing to fuselage attachment and could result in separation of the wing in flight on Hawker Siddeley Limited Model DH-114 Heron airplanes. The cracks are believed to be caused by stress corrosion and an airworthiness directive (AD 76-16-03), Amendment 39-2689, has been issued to correct this problem. Since the corresponding lug arrangement on the DH-104 Dove airplane is almost identical in configuration and of the same material as the Heron, it is likely that similar cracking exists or will develop on these airplanes.

Interested persons have been afforded an opportunity to participate in the making of the amendment. No objections were received. However, upon further review the FAA has determined that certain clarifications are needed (1) to define more explicitly the meaning of a serviceable used boom that can be used as a replacement; (2) to point out that in paragraph (b) the inspection in accordance with Appendix 2 requires use of the dye penetrant method as well as the ultrasonic method; (3) to eliminate an ambiguity in the repetitive inspection schedule set forth in paragraph (b)(1); and (4) to define more accurately the cracking covered by paragraph (d) to make clear that that paragraph applies to cracking which is other than literally horizontal. In addition, the applicability statement has been corrected to show that this AD does not apply to those airplanes which have been modified in accordance with STC SA1747WE. Other minor editorial changes have also been made.

In addition, the FAA has determined that it is necessary to revise the repetitive inspection schedule for replacement booms to be more consistent with the inspection schedules for those booms which are currently in service and to point out that replacement of the boom is required when cracking is found which runs from the bolt hole in an inboard direction only.

Accordingly, with the exception of paragraph (e), the amendment is adopted as proposed with the clarifications noted above. Revised paragraph (e) is also adopted and since a situation exists that requires the immediate adoption of this regulation, it is found that notice and public procedure thereon are impracticable.

ADOPTION OF THE AMENDMENT

Accordingly, pursuant to the authority delegated to me by the Administrator, § 39.13 of Part 39 of the Federal Aviation Regulations (14 CFR 39.13) is amended by adding the following new airworthiness directive:

HAWKER SIDDELEY AVIATION, LIMITED (British Aerospace). Applies to DH-104 "Dove" airplanes, all series, certificated in all categories, except those airplanes modified in accordance with STC SA1747WE.

Compliance required as indicated.

To prevent possible failure of the wing to fuselage attachment and loss of wing in flight, accomplish the following:

(a) Within the next 100 hours time in service after the effective date of this AD, unless already accomplished, remove the port and starboard wing root fairings and inspect the upper three lugs at each end of the center section main spar top boom, P/N 4FS.135 A/1, for cracks using an ultrasonic method of inspection in accordance with Appendix 1 of Hawker Siddeley Aviation, Ltd., Technical New Sheet TNS 237, dated September 9, 1976, (hereinafter referred to as the Technical News Sheet) or an FAA-approved equivalent.

NOTE.—This inspection can be conducted with the wing installed.

(b) If no cracks are found during the inspection required by paragraph (a) of this AD, repeat the inspection at intervals not to exceed 1200 flight hours or 2 calendar years, whichever occurs sooner, until the wings are removed for compliance with AD 72-16-07 at which time the area must be further inspected using the ultrasonic and dye penetrant methods in accordance with appendix 2 of the Technical News Sheet or an FAA-approved equivalent. Thereafter, if no cracking is found, continue to inspect the area as follows:

(1) In accordance with the method specified in paragraph (a) of this AD at an interval not to exceed 3 calendar years from each time the area is inspected in conjunction with the wing removal required by AD 72-16-07; and

(2) In accordance with the ultrasonic and dye penetrant methods specified in appendix 2 of the Technical News Sheet or an FAA-approved equivalent at each time the wings are removed for compliance with AD 72-16-07.

(c) If any cracks are found during any inspection required by this AD to be performed in accordance with the method specified in paragraph (a) of this AD, further inspect by ultrasonic and dye penetrant methods in accordance with Appendix 2 of the Technical News Sheet or an FAA-approved equivalent with the wing removed.

(d) If, during any inspection required by this AD, cracking of the lugs is found which is confined to only one of the lugs per side of the aircraft and exists only from the bolt hole towards the outboard end of the lug, the center section carry through boom may remain on the aircraft and continued flight is permitted provided the wing is removed at intervals not to exceed 300 flight hours, or 3 months, whichever is sooner, and the cracked lug is inspected for crack propagation and the remaining two lugs are inspected for cracking, all in accordance with Appendix 2 of the Technical News Sheet or an FAA-approved equivalent, until the boom is replaced with a new boom of the same part number or a used boom of the same part number determined after inspection in accordance with Appendix 2 of the Technical News Sheet to be crack-free.

(e) If, during any inspection required by this AD, cracking is found in more than one lug per side of the aircraft or the cracking of any one lug extends to both sides (inboard and outboard) of the bolt hole or runs from the bolt hole in an inboard direction only, before further flight, replace the carry through boom with a new boom of the same part number or a used boom of the same part number determined after inspection in accordance with Appendix 2 of the Technical News Sheet to be crack-free. Replacement booms must continue to be inspected in accordance with the following schedule:

(1) For used replacement booms, within 3 years from replacement, inspect the lug area in accordance with Appendix 1 of the Technical News Sheet or an FAA-approved equivalent except if any wing removal is required by AD-72-16-07 during that period, inspect in accordance with Appendix 2 of the Technical News Sheet or an FAA-approved equivalent concurrently with that wing removal. Thereafter inspect in accordance with the schedule and inspection methods specified in paragraphs (b)(1) and (b)(2) of this AD.

(2) For new replacement booms, inspect the lug area in accordance with Appendix 2

of the Technical News Sheet or an FAA-approved equivalent with the wing removed prior to accumulating 6 years in service and thereafter in accordance with the schedule and inspection methods specified in paragraphs (b)(1) and (b)(2) of this AD. However, if the first inspection required after replacement is not performed in conjunction with a wing removal required by AD 72-16-07, within the next 3 years after that inspection, inspect in accordance with Appendix 1 of the Technical News Sheet or an FAA-approved equivalent except if any wing removal is required by AD 72-16-07 during that period inspect in accordance with Appendix 2 of the Technical News Sheet or an FAA-approved equivalent concurrently with that wing removal and thereafter inspect in accordance with the schedule and inspection methods specified in paragraphs (b)(1) and (b)(2) of this AD.

This amendment becomes effective February 19, 1979.

(Secs. 313(a), 601, and 603 Federal Aviation Act of 1958, as amended, (49 U.S.C. 1354(a), 1421, and 1423); Sec. 6(c), Department of Transportation Act (49 U.S.C. 1655(c)); 14 CFR 11.89).

Issued in Washington, D.C. on January 10, 1979.

J. A. FERRARESE,
*Acting Director,*
*Flight Standards Service.*

[FR Doc. 79-1731 Filed 1-17-79; 8:45 am]

---

[4910-13-M]

[Docket No. 79-SO-2; Amendment 39-3394]

## PART 39—AIRWORTHINESS DIRECTIVES

### Piper Models PA-28-161, PA-28R-201, and PA-28R-201T Series Airplanes

AGENCY: Federal Aviation Administration (FAA), DOT.

ACTION: Final rule.

SUMMARY: This amendment adopts an airworthiness directive which requires checking the fuel gascolator for proper installation on certain Piper PA-28-161, PA-28R-201, and PA-28R-201T airplanes. This amendment requires corrective action if a gascolator is found installed with the ports reversed. This amendment is necessary to insure that the fuel system is not contaminated and that the proper fuel flow is maintained to the engine.

DATES: Effective date: January 29, 1979. Compliance is required within the next 25 hours time in service after the effective date of this AD.

ADDRESSES: Piper Service Bulletin 612 may be obtained from Piper Aircraft Corporation, 820 East Bald Eagle Street, Lockhaven, Pennsylvania 17745. Copies of Piper Service Bulletin 612 are maintained in the AD Docket File and may be examined in Room 275, Federal Aviation Administration, Southern Region, 3400 Whipple Street, East Point, Georgia.

FOR FURTHER INFORMATION CONTACT:

Gil Carter, ASO-214, Propulsion Section, Engineering and Manufacturing Branch, Southern Region, P.O. Box 20636, Atlanta, Georgia 30320, telephone (404) 763-7435.

SUPPLEMENTARY INFORMATION: There have been reports of improperly installed fuel gascolators which could result in fuel contamination, interrupted fuel flow, and engine power loss. Since this condition is likely to exist or develop in other airplanes of the same type design, this amendment is issued to insure that the fuel gascolator is installed properly.

Since a situation exists that requires immediate adoption of this regulation, it is found that notice and public procedure hereon are impracticable, and good cause exists for making this amendment effective in less than 30 days.

ADOPTION OF THE AMENDMENT

Accordingly, pursuant to the authority delegated to me by the Administrator, § 39.13 of the Federal Aviation Regulations (14 CFR 39.13) is amended by adding the following new Airworthiness Directive:

PIPER AIRCRAFT CORPORATION: Applies to Model PA-28-161, serial numbers 28-7816002 through 28-7816553, 28-7816554, 28-7816556 through 28-7816564, 28-7816566 through 28-7816597, 28-7816599 through 28-7816607, 28-7816609 through 28-7816634, 28-7816636 through 28-7816643; Model PA-28R-201T, serial numbers 28R-7803002 through 28R-7803294, 28R-7803296 through 28R-7803308, 28R-7803310, 28R-7803311, 28R-7803315, 28R-7803317 through 28R-7803321, 28R-7803323 through 28R-7803325; and Model PA-28R-201, serial numbers 28R-7837002 through 28R-7837232, 28R-7837234, 28R-7837236, 28R-7837238 through 28R-7837241, 28R-7837243 through 28R-7837245, 28R-7837248 through 28R-7837250, 28R-7837253 through 28R-7837257, 28R-7837260, 28R-7837262 through 28R-7837264, 28R-7837266 through 28R-7837270, 28R-7837272 through 28R-7837275, airplanes certificated in all categories.

Compliance is required within the next 25 hours time in service after the effective date of this AD unless already accomplished.

To prevent possible fuel flow interruption, accomplish the following:

(a) Remove the top cowl or open the top left cowl as appropriate.

(b) Remove the lower cowl attaching hardware on left side only and pull lower cowl outward to gain visual access to the fuel gascolator assembly.

(c) Check the gascolator installation to determine if the gascolator is installed with the ports oriented as shown in the accompanying figure.

(d) If the gascolator is installed in accordance with the accompanying figure, secure the cowling and make the appropriate maintenance record entry.

(e) If the gascolator is not installed in accordance with the accompanying figure, have the following accomplished by a person autholzed by FAR 43.3:

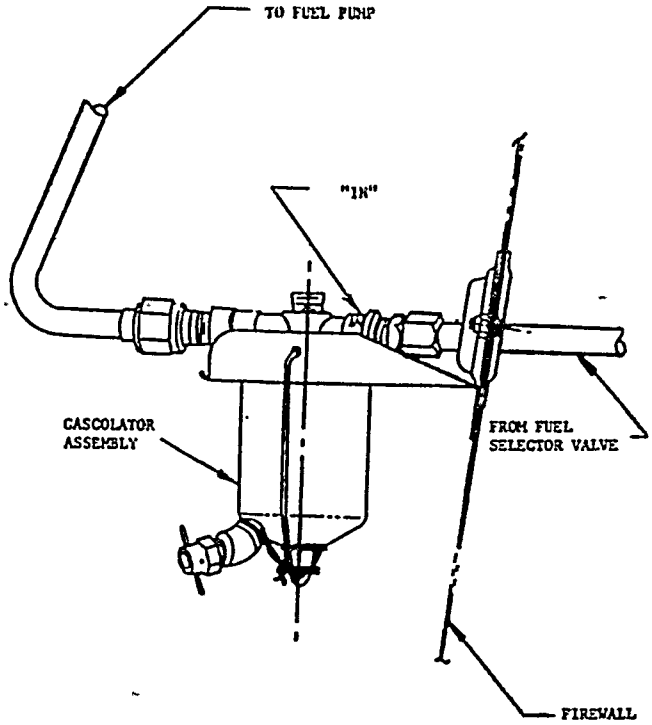

(1) Remove lower cowling.

(2) Place the fuel selector valve in the "OFF" position.

(3) Cut safety wire on the gascolator bowl bail. Remove the filter bowl, gasket and screen from the gascolator. Clean any deposits that may be on the screen and/or the bowl.

(4) Carefully spread the bail wire where it enters the housing until the bail can be removed.

(5) Supporting the fittings in the gascolator housing with an open end wrench, remove the inlet and outlet "B" nuts. It will facilitate the removal and re-installation of the gascolator assembly if the fuel line is loosened at the electric fuel pump inlet.

(6) On the PA-28-161 only, disconnect the primer line directly on top of the gascolator housing.

(7) Remove the gascolator assembly from the attaching bracket and turn 180°, positioning as shown in the accompanying figure.

(8) If the line assembly does not reach the inlet fitting, remove the forward left hand upholstery panel and inspect for, and correct, improper bends.

*Caution:* Pulling the line into position with the "B" nut may cause damage to the flare.

(9) Re-assemble the gascolator assembly and tighten all fuel line connections.

(10) Turn on the aircraft power and the fuel boost pump and check for any fuel leaks. Correct any discrepancies found.

(11) Reinstall the cowling.

(12) Make the appropriate maintenance record entry.

(f) An alternate method of compliance may be approved by the Chief, Engineering and Manufacturing Branch, Federal Aviation Administration, Southern Region.

The checks in this AD may be accomplished by the pilot and appropriate maintenance record entries made in accordance with FAR 91.173. Installation correction must be accomplished by a person authorized by FAR 43.3.

NOTE.—Piper Service Bulletin 612 dated October 25, 1978, also pertains to this subject.

(Secs. 313(a), 601, and 603, Federal Aviation Act of 1958, as amended (49 U.S.C. 1354(a), 1421, and 1423; Sec. 6(c), Department of Transportation Act (49 U.S.C. 1655(c)); 14 CFR 11.89).)

Issued in East Point, Georgia, on January 8, 1979.

GEORGE R. LA CAILLE,
*Acting Director,*
*Southern Region.*

[FR Doc. 79-1733 Filed 1-17-79; 8:45 am]

[4910-13-M]

[Airspace Docket No. 77-EA-90]

## PART 71—DESIGNATION OF FEDERAL AIRWAYS, AREA LOW ROUTES, CONTROLLED AIRSPACE, AND REPORTING POINTS

### Designation of Transition Area: Suffolk, Va.

AGENCY: Federal Aviation Administration (FAA), DOT.

ACTION: Final rule.

SUMMARY: This rule will designate a Suffolk, Va., Transition Area, over Suffolk Municipal Airport, Suffolk, Va. This designation will provide protection to aircraft executing the new instrument approach which has been developed for the airport. An instrument approach procedure requires the designation of controlled airspace to protect instrument aircraft utilizing the instrument approach.

EFFECTIVE DATE: 0901 G.M.T. March 22, 1979.

FOR FURTHER INFORMATION CONTACT:

Frank Trent, Airspace and Procedures Branch, AEA-530, Air Traffic Division, Federal Aviation Administration, Federal Building, J.F.K. International Airport, Jamaica, New York 11430, Telephone (212) 995-3391.

SUPPLEMENTARY INFORMATION: On page 64130 of the FEDERAL REGISTER for December 22, 1977, the FAA published an NPRM giving interested parties time in which to submit comments. No objections have been received.

ADOPTION OF THE AMENDMENT

Accordingly, pursuant to the authority delegated to me by the Administrator, Subpart G of Part 71 of the Federal Aviation Regulations (14 CFR Part 71) is amended, effective 0901 G.M.T. March 22, 1979, as published.

(Section 307(a), and 313(a), Federal Aviation Act of 1958 (49 U.S.C. 1348(a) and 1354(c)); Sec. 6(c) of the Department of Transportation Act (49 U.S.C. 1655(c)); and 14 CFR 11.69.)

Issued in Jamaica, New York, on December 28, 1978.

E. J. CARDINALI,
*Acting Director,*
*Eastern Region.*

1. Amend § 71.181 of Part 71 of the Federal Aviation Regulations so as to designate a Suffolk, Va. 700-foot Floor transition area as follows:

SUFFOLK, VA.

That airspace extending upward from 700 feet above the surface within a 6.5-mile radius of the center, (36° 40' 53" N., 76° 36' 11" W.,) of Suffolk Municipal Airport, Suffolk, Va.; within 3 miles each side of a 249° bearing from the Suffolk RBN (36° 40' 49" N., 76° 36' 28" W.) extending from the 6.5-mile radius area to 8.5 miles west of the RBN.

[FR Doc. 79-1730 Filed 1-17-79; 8:45 am]

[6320-01-M]

## CHAPTER II—CIVIL AERONAUTICS BOARD

[Amdt. No. 77]

## PART 385—DELEGATIONS AND REVIEW OF ACTION UNDER DELEGATION; NONHEARING MATTERS

### Creation of Bureau of Pricing and Domestic Aviation; Correction

AGENCY: Civil Aeronautics Board.

ACTION: Correction in Final Rule.

SUMMARY: This is a correction of an error in the Board's delegation of authority reflecting the consolidation of the Bureau of Operating Rights and the Bureau of Fares and Rates into a new bureau, the Bureau of Pricing and Domestic Aviation.

DATES: Effective: December 14, 1978. Adopted: December 14, 1978.

FOR FURTHER INFORMATION CONTACT:

Mark Schwimmer, Office of the General Counsel, Civil Aeronautics Board, 1825 Connecticut Avenue, Washington, D.C. 20428. 202-673-5442.

SUPPLEMENTARY INFORMATION: Several new paragraphs were added to 14 CFR 385.16 by OR-141, 44 FR 59831, December 22, 1978. The opening sentence of new paragraph (k)(3) of § 385.16 should read:

§ 385.16 Delegation to the Associate Director, Pricing, Bureau of Pricing and Domestic Aviation.

* * * * *

(k) * * *

(3) Issue orders approving, disapproving, or approving subject to conditions, IATA agreements relating to fare and rate matters, with respect to the following:

Dated: January 15, 1979.

PHYLLIS T. KAYLOR,
*Secretary.*

[FR Doc. 79-1874 Filed 1-17-79; 8:45 am]

---

[3510-08-M]

## Title 15—Commerce and Foreign Trade

## CHAPTER IX—NATIONAL OCEANIC AND ATMOSPHERIC ADMINISTRATION, DEPARTMENT OF COMMERCE

## PART 930—FEDERAL CONSISTENCY WITH APPROVED COASTAL ZONE MANAGEMENT PROGRAMS

### Consistency for Outer Continental Shelf (OCS) Exploration, Development and Production Activities

AGENCY: National Oceanic and Atmospheric Administration.

ACTION: Amendments to rules.

SUMMARY: This rule amends existing regulations on consistency for Outer Continental Shelf (OCS) exploration, development, and production activities with approved State coastal management programs. These amendments are necessary to make these regulations conform with subsequently enacted law (Section 504 of the Outer Continental Shelf Lands Act Amendments of 1978—Pub. L. 95-372), and to resolve a procedural difference between these regulations and Department of the Interior regulations pertaining to the same general subject matter.

EFFECTIVE DATE: January 18, 1979.

FOR FURTHER INFORMATION CONTACT:

James P. Lawless, Assistant General Counsel, (202) 634-4239, or John O'Donnell, Office of Coastal Zone Management, (202) 634-4243, NOAA, Page Building 1, 2001 Wisconsin Avenue, N.W., Washington, D.C. 20235.

SUPPLEMENTARY INFORMATION: In volume 43 of the FEDERAL REGISTER of Monday, March 13, 1978, beginning at page 10510, the National Oceanic and Atmospheric Administration (NOAA) published final regulations for the Office of Coastal Zone Management (OCZM) pertaining to the Federal consistency provisions of the Coastal Zone Management Act of 1972, as amended (CZMA, sections 307(c)(1), 307(c)(2, 307(c)(3) (A) and (B) and 307(d)). Subpart E of these regulations, beginning at page 10526, addresses section 307(c)(3)(B) of the CZMA. This provision requires each activity described in detail in any plan submitted to the Secretary of the Interior for the exploration or development of, or production from, any area leased under the Outer Continental Shelf Lands Act to be conducted in a manner consistent with approved state coastal zone management programs.

In more detail—and prior to amendment—section 307(c)(3)(B) required that any person submitting such a plan must attach to it a certification that each activity described in detail in the plan complied with the state program and would be conducted in a manner consistent with it. The section went on to say, among other things, that the state coastal zone management agency had to decide at the earliest practicable time, whether it concurred with or objected to the certification and so notify the Secretaries of Interior and Commerce. Subsection (ii) of the provision said, in effect, that unless the state agency gave this notification within six months of that agency's receipt of copy of the certification, its concurrence was "conclusively presumed." These matters are treated in 15 CFR 930.70 and 930.78 of the March 13, 1978, regulations.

Section 504 of the 1978 amendments to the Outer Continental Shelf Lands Act amended subsection (ii) of section 307(c)(3)(B). Section 504 added the requirement that any state agency in receipt of the required consistency certification that had not submitted the required notification of concurrence or objection to the Secretary of Commerce, the appropriate federal agency and the person submitting the OCS plan within three months following receipt of the certification must submit to them a written statement "describing the status of review and the basis for further delay in issuing a final decision." Section 504 went on to provide that, if the state agency did not submit such a written statement, then its concurrence with the certification would be "conclusively presumed." Accordingly, it becomes necessary to amend the implementing regulations to reflect these amendments of the law.

On another subject, conflict has been found in terminology between the Department of the Interior regulations pertaining to the submission of OCS plans and the NOAA consistency regulations pertaining to this same subject. The DOI regulations (30 CFR 250.34) require the submission of such plans to the "USGS Area Supervisor." The NOAA regulations require any person submitting any OCS plan to the Secretary of the Interior to furnish the state agency a copy of the OCS plan. The procedural conflict is eliminated by directing any person submitting an OCS plan to furnish the necessary number of copies of a plan to the USGS Area Supervisor who in turn will distribute them to the appropriate parties. This change will provide one contact for the submission of OCS plans.

Also, to clarify the DOI contact for submission of plans, it has been agreed between DOI and NOAA that the NOAA regulations will be amended to substitute "USGS Area Supervisor" for "Secretary of the Interior" wherever the latter appears in the NOAA regulations.

Since the first amendment to the regulations described above is required by law, and since the second is not of a substantive nature, NOAA hereby finds for good cause, in accordance with 5 U.S.C. 553 (b) and (d), that notice of public procedures on such regulatory amendments is unnecessary and that a 30-day delay prior to the effective date of the amendments is unnecessary.

In consideration of the foregoing:

1. Delete so much of subparagraph (ii) under *Comment* as begins with "Concurrence" and ends with "subparagraph (A)" and substitute the following:

§ 930.70 Objectives [Amended]

* * * * * *

(ii) Concurrence by such state with such certification is conclusively presumed as provided for in subparagraph (A), except if such state fails to concur with or object to such certification within three months after receipt of its copy of such certification and supporting information, such state shall provide the Secretary, the appropriate federal agency, and such person with a written statement describing the status of review and the basis for further delay in issuing a final decision, and if such statement is not so provided, concurrence by such state with such certification shall be conclusively presumed; * * *

* * * * * *

2. *15 CFR 930.79 (Amended).* Delete the entire section and substitute the following:

§ 930.79 State agency concurrence or objection.

(a) At the earliest practicable time, the State agency shall notify the person, the USGS Area Supervisor, and the Assistant Administrator of its

concurrence with or objection to the consistency certification. State agencies should restrict the period of public notice, receipt of comments, hearing proceedings and final decision-making to the minimum time necessary to inform the public, obtain sufficient comment, and develop a reasonable decision on the matter. If the State agency has not issued a decision within three months following commencement of State agency review, it shall notify the person, the USGS Area Supervisor, and the Assistant Administrator of the status of review and the basis for further delay in issuing a final decision. Notice shall be in written form and postmarked no later than three months following the State agency's receipt of the certification and supporting information. Concurrence by the State agency shall be conclusively presumed if the notification required by this subparagraph is not provided.

(b) Concurrence by the State agency shall be conclusively presumed in the absence of a State agency objection to the consistency certification within six months following commencement of State agency review.

(c) If the State agency objects to one or more of the Federal license or permit activities described in detail in the OCS plan, it must provide a separate discussion for each objection in accordance with the directives within § 930.64 (b) and (d). The objection shall also include a statement informing the person of a right of appeal to the Secretary on the grounds described in Subpart H.

(*Comment:* Except for the requirements for State agencies to take certain actions within three months and to inform the USGS Area Supervisor of consistency decisions, the provisions in this section are comparable to those described in §§ 930.63-930.64).

3. The following sections in Subpart E of 15 CFR Part 930 are amended by the deletion of the phrase "Secretary of the Interior" wherever it appears and the substitution of the phrase "USGS Area Supervisor":

a. 930.71
b. 930.72
c. 930.73
d. 930.76
e. 930.79(a), as amended
f. 930.83
g. 930.86(c)
h. 930.86(d)

4. 15 CFR 930.76(b) is revised to read as follows:

§ 930.76 Submission of an OCS plan and consistency certification [Amended]

* * * * *

When satisfied that the proposed activities meet the Federal consistency requirements of this Subpart, provide the USGS Area Supervisor with a consistency certification, attached to the OCS plan, and the USGS Area Supervisor shall furnish the State agency a copy of the OCS plan (excluding proprietary information) and consistency certification.

* * * * *

Dated: January 10, 1979.

ROBERT L. CARNAHAN,
*Acting Assistant Administrator for Administration.*

[FR Doc. 79-1871 Filed 1-17-79; 8:45 am]

---

[1505-01-M]

## Title 17—Commodity and Securities Exchanges

## CHAPTER I—COMMODITY FUTURES TRADING COMMISSION

## PART 1—GENERAL REGULATIONS UNDER THE COMMODITY EXCHANGE ACT

## PART 4—COMMODITY POOL OPERATORS AND COMMODITY TRADING ADVISORS

### Commodity Pool Operators and Commodity Trading Advisors; Final Rules

*Correction*

In FR Doc. 79-638, appearing at page 1918, in the issue for Monday, January 8, 1978, make the following changes:

1. On page 1925, second column, in § 4.21 (a), third line, the comma following the word "Act" should be removed.

2. On page 1925, third column, in § 4.21 (a)(4)(i)(C), fifth line, "hundreth" should be corrected to read "hundredth".

3. On page 1926, first column, in § 4.21 (a)(4)(ii), fourteenth and seventeenth lines, the dashes between "of" and "percent" and "only" and "months" are intended to represent blanks.

4. On page 1926, third column, in § 4.22 (a) in the fifth line, "operate" should be corrected to read "operates".

5. On page 1927, in the second column, in § 4.22 (d) sixth line, "advisor(s)" should be corrected to read "advisor(s))".

6. On page 1928, third column, in § 4.31 (c) sixth line, "amended" should be corrected to read "amendment".

[4310-84-M]

## Title 43—Public Lands: Interior

## CHAPTER II—BUREAU OF LAND MANAGEMENT: DEPARTMENT OF THE INTERIOR

### APPENDIX—PUBLIC LAND ORDERS

[Public Land Order 5656; CA-1560]

### CALIFORNIA

### Partial Revocation of Public Land Order No. 5043

AGENCY: Bureau of Land Management (Interior).

ACTION: Final rule.

SUMMARY: This order partially revokes a public land order which withdrew and reserved lands for use of the Department of the Navy as a parachute test facility. The lands remain withdrawn by Executive Order of March 10, 1924, establishing Public Water Reserve No. 90; E.O. No. 5498 of November 25, 1930, reserving lands for the Salton Sea National Wildlife Refuge; and the order of October 19, 1920, of the Secretary of the Interior, withdrawing lands for reclamation purposes, so far as such order affects any of the lands described below.

EFFECTIVE DATE: January 18, 1979.

FOR FURTHER INFORMATION CONTACT:

Louis B. Bellesi, 202-343-8731.

By virtue of the authority contained in section 204 of the Act of October 21, 1976, 90 Stat. 2751; 43 U.S.C. 1714, it is ordered as follows:

1. Public Land Order No. 5043 of April 14, 1971, which withdrew and reserved public lands for the Department of the Navy as a parachute test facility is hereby revoked so far as it affects the following described lands:

SAN BERNARDINO MERIDIAN

T. 10 S., R. 11 E.,
Secs. 14, 18, 20, 22, 24, 26, 28, 32, 34, 36.
T. 10 S., R. 12 E.,
Secs. 18, 20, 30, and 32.
T. 11 S., R. 12 E.,
Secs. 6, 8, 18, 19, 20, 29, and 30;
Sec. 32, N½.

The area described aggregates approximately 13,810 acres in Imperial County.

2. All the lands described remain in existing withdrawals and under water.

GUY R. MARTIN,
*Assistant Secretary of the Interior, Land and Water Resources.*

JANUARY 12, 1979.

[FR Doc. 79-1734 Filed 1-17-79; 8:45 am]

[6712-01-M]

## Title 47—Telecommunication

## CHAPTER I—FEDERAL COMMUNICATIONS COMMISSION

[Docket No. 21291; RM-2711]

## PART 73—RADIO BROADCAST SERVICES

### FM Broadcast Station in St. Ignace, Mich., Changes Made in Table of Assignments

AGENCY: Federal Communications Commission.

ACTION: Report and order.

SUMMARY: Action taken herein substitutes a Class C FM channel for a Class A channel at St. Ignace, Michigan, in response to a petition filed by Mighty-Mac Broadcasting Company. The Class C channel could permit establishment of a station which would provide a first and second FM as well as a first and second nighttime aural service to the area.

EFFECTIVE DATE: February 19, 1979.

ADDRESS: Federal Communications Commission, Washington, D.C. 20554.

FOR FURTHER INFORMATION CONTACT:

Mildred B. Nesterak, Broadcast Bureau (202) 632-7792.

SUPPLEMENTARY INFORMATION:

Adopted: January 4, 1979.

Released: January 12, 1979.

In the Matter of Amendment of § 73.202(b), Table of Assignments, FM Broadcast Stations. (St. Ignace, Michigan.)

By the Chief, Broadcast Bureau:

1. The Commission has under consideration its Notice of Proposed Rule Making, adopted June 16, 1977, 42 FR 32813, inviting comments on a proposal to substitute Class C FM Channel 275 for Channel 272A at St. Ignace, Michigan. The proceeding was instituted on the basis of a petition filed by Mighty-Mac Broadcasting Company ("petitioner"), licensee of daytime-only AM Station WIDG, St. Ignace, Michigan. There were no oppositions to the proposal.

2. St. Ignace (pop. 2,892), seat of Mackinac County (pop. 9,600),[1] is located at the southeastern tip of Michigan's "Upper Peninsula," between Lakes Michigan and Huron, and is approximately 64 kilometers (40 miles) southwest of the Canadian border. It is served locally by daytime-only AM Station WIDG, licensed to petitioner. Channel 272A is assigned to St. Ignace, but is presently unoccupied and unapplied for.

3. Petitioner asserts that the area's principal business is tourism, with a heavy influx of tourists into the county during the summer and fall, increasing the population well beyond that estimated by the Census. The area around St. Ignace is classified as rural by the Census Bureau.

4. Channel 275 could be assigned to St. Ignace, Michigan, in conformity with the minimum distance separation requirements. One community, Onaway (pop. 1,262), would be precluded as a result of the proposed assignment. However, petitioner has indicated that an alternative Class A channel is available for assignment should the need arise.

5. Petitioner's engineering analysis, using Roanoke Rapids 9 F.C.C. 2d 672 (1967), and Anamosa and Iowa City, Iowa, 46 F.C.C. 2d 520 (1974), criteria indicates that, if Channel 275 were assigned and Channel 272A were deleted, an FM station operating with 39 kilowatts and antenna height of 70 meters (230 feet), as contemplated by petitioner, would provide a first and second FM and aural nighttime service to 83 persons in a 67 square kilometer (26 square miles) area and 373 persons in a 215 square kilometer (83 square miles) area, respectively.

6. In the Notice we pointed out that in 1966, Channel 272A was assigned to St. Ignace at the request of the petitioner. Although petitioner at that time stated its intent to apply for the channel, it later realized construction of a Class A facility could not be cost-justified. In this proceeding petitioner claims that a wide coverage Class C assignment would be able to obtain enough revenue to make it financially viable. Because of our concern as to whether petitioner would be financially able to construct a station with the proposed facilities, and whether funds exist to sustain construction costs, we requested petitioner to provide a realistic and convincing showing of its commitment, indicating both intent and ability to promptly provide FM service, if authorized. Petitioner has furnished adequate information which persuades us that it is financially able to construct and operate a station if it is ultimately authorized to do so.

7. The proposed Channel 275 assignment would provide for an FM station which could render first and second FM service as well as first and second nighttime aural service to the area. In this light, and since it has been shown that there is an alternate channel available for assignment to the community of Onaway, which is located in the precluded area, we believe the public interest would be served by the proposed assignment.

8. The Canadian Government has given its concurrence to the proposed assignment of Channel 275 to St. Ignace, Michigan.

9. Authority for the action taken herein is contained in Sections 4(i), 5(d)(1), 303 (g) and (r) and 307(b) of the Communications Act of 1934, as amended, and Section 0.281 of the Commission's Rules.

10. In view of the foregoing, IT IS ORDERED, That effective February 19, 1979, § 73.202(b) of the Commission's Rules, the FM Table of Assignments, as regards St. Ignace, Michigan, IS AMENDED as follows:

| City | Channel No. |
|---|---|
| St. Ignace, Michigan | 275 |

11. *It is further ordered*, That this proceeding is terminated.

(Secs. 4, 303, 307, 48 Stat., as amended, 1066, 1082, 1083; 47 U.S.C. 154, 303, 307.)

FEDERAL COMMUNICATIONS COMMISSION,
WALLACE E. JOHNSON,
*Chief, Broadcast Bureau.*

[FR Doc. 79-1771 Filed 1-17-79; 8:45 am]

[1] Population figures are taken from the 1970 U.S. Census.

[4910-60-M]

## Title 49—Transportation

## CHAPTER I—RESEARCH AND SPECIAL PROGRAMS ADMINISTRATION MATERIALS TRANSPORTATION BUREAU, DEPARTMENT OF TRANSPORTATION

## PART 171—GENERAL INFORMATION, REGULATIONS, AND DEFINITIONS

## PART 173—SHIPPERS—GENERAL REQUIREMENTS FOR SHIPMENTS AND PACKAGINGS

[Docket No. HM-22; Amdt. Nos. 171-43, 173-126]

### Matter Incorporated by Reference

AGENCY: Materials Transportation Bureau, Research and Special Programs Administration, DOT.

ACTION: Final rule.

SUMMARY: The purpose of these amendments to §§ 171.7(d)(3)(ii) and 173.34(e)(10) of the Hazardous Materials Regulations is to permit the use of the updated edition of the Compressed Gas Association's (CGA) Pamphlet C-6 for visual inspection of compressed gas cylinders. In addition, these amendments correct an inconsistency existing between §§ 173.34(e)(5) and 173.34(e)(10). The intended effect of these amendments is to improve proce-

dures in the visual inspection of compressed gas cylinders and to clarify the time requirements for retention of cylinder reinspection and retest records.

EFFECTIVE DATE: Upon publication in the FEDERAL REGISTER.

FOR FURTHER INFORMATION CONTACT:

Douglas A. Crockett, Standards Division, Office of Hazardous Materials Regulation, Materials Transportation Bureau, 2100 Second Street S.W., Washington, D.C. 20590; 202/426-2075.

SUPPLEMENTARY INFORMATION: On January 9, 1978, the Materials Transportation Bureau (MTB) published a notice of proposed rulemaking, Docket HM-22, Notice 78-1 (43 FR 1369). The proposals contained in Notice 78-1 were based on petitions for rulemaking submitted by the CGA. One petition requested an update to § 171.7(d)(3)(ii), which incorporates by reference CGA Pamphlet C-6 setting out the standards for visual inspection of compressed gas cylinders, from the referenced 1968 edition to the 1975 edition. The CGA periodically reviews its standards and publishes revisions when clarification, improvement, or additions are necessary. The revisions made by CGA in the 1975 pamphlet were coordinated with the MTB and it was mutually agreed that each of the changes was necessary. The notice proposed to update the reference from the 1968 edition of the pamphlet to the 1975 edition.

The CGA also petitioned to amend § 173.34(e)(10) to eliminate an inconsistency between that paragraph and paragraph (e)(5) with respect to the length of time cylinder reinspection and retest records are to be retained. Currently, § 173.34(e)(10) requires inspection results to be kept as a permanent record, while paragraph (e)(5) requires the owner or his authorized agent to keep the records until expiration of the retest period or until the cylinder is reinspected or retested, whichever occurs first. The notice proposed to amend § 173.34(e)(10) to refer to the retesting requirements of paragraph (e)(5).

One commenter objected to the proposed amendment to § 171.7(d)(3)(ii) on the grounds that paragraph 5.3.9.2 of CGA Pamphlet C-6 contains a visual inspection procedure for high pressure cylinders which the commenter considers inadequate and unsafe. The commenter was advised that the objectionable paragraph in Pamphlet C-6 is not applicable to § 173.24(e)(10), the paragraph in which the pamphlet is referenced and, therefore, the objection is not germane to the proposed rulemaking. The commenter subsequently withdrew his objection. Other comments submitted were in support of the proposals.

In consideration of the foregoing, Parts 171 and 173 of Title 49, Code of Federal Regulations, are amended as follows:

1. In § 171.7 paragraph (d)(3)(ii) is amended by changing "1968" to read "1975."

2. In § 173.34 paragraph (e)(10) is amended by revising the fourth sentence to read as follows:

§ 173.34 Qualification, maintenance and use of cylinders.

* * * * *

(e) * * *

(10) * * * Inspections shall be made only by competent persons and the results shall be recorded on a suitable data sheet, the completed copies which shall be kept in accordance with the requirements of paragraph (e)(5) of this section. * * *

AUTHORITY: (49 U.S.C. 1803, 1804, 1806, 1808; 49 CFR 1.53(e).)

NOTE.—The Materials Transportation Bureau has determined that this final amendment will not have a major economic impact under the terms of Executive Order 12044 and DOT implementing procedures (43 FR 9582). A regulatory evaluation is available for review in the docket.

Issued in Washington, D.C. on January 5, 1979.

L. D. SANTMAN,
*Director, Materials, Transportation Bureau.*

[FR Doc. 79-1482 Filed 1-17-79; 8:45 am]

---

[4910-59-M]

## CHAPTER V—NATIONAL HIGHWAY TRAFFIC SAFETY ADMINISTRATION, DEPARTMENT OF TRANSPORTATION

[Docket No. LVM 77-05; Notice 3]

## PART 531—PASSENGER AUTOMOBILE AVERAGE FUEL ECONOMY STANDARDS

### Exemption From Average Fuel Economy Standards

AGENCY: National Highway Traffic Safety Administration, Department of Transportation.

ACTION: Final decision to grant exemption from average fuel economy standards.

SUMMARY: This notice exempting Excalibur Automobile Corp. (Excalibur) from the generally applicable average fuel economy standard of 18.0 miles per gallon (mpg) for 1978 model year passenger automobiles and establishing an alternative standard is issued in response to a petition by Excalibur. The alternative standard is 11.5 mpg.

DATE: The exemption and alternative standard apply in the 1978 model year.

FOR FURTHER INFORMATION CONTACT:

Douglas Pritchard, Office of Automotive Fuel Economy Standards, National Highway Traffic Safety Administration, Washington, D.C. 20590 (202-755-9384).

SUPPLEMENTARY INFORMATION: The National Highway Traffic Safety Administration (NHTSA) is exempting Excalibur from the generally applicable passenger automobile average fuel economy standard for the 1978 model year and establishing an alternative standard.

This exemption is issued under the authority of section 502(c) of Title V of the Act. Section 502(c) provides that a manufacturer of passenger automobiles that manufactures fewer than 10,000 vehicles annually may be exempted from the generally applicable average fuel economy standard if that generally applicable standard is greater than the low volume manufacturer's maximum feasible average fuel economy and if the NHTSA establishes an alternative standard applicable to that manufacturer at the manufacturer's maximum feasible average fuel economy. In determining the manufacturer's maximum feasible average fuel economy, section 502(e) of the Act requires the NHTSA to consider:

(1) Technological feasibility;

(2) Economic practicability;

(3) The effect of other Federal motor vehicle standards on fuel economy; and

(4) The need of the Nation to conserve energy.

This final rule was preceded by a notice announcing the receipt of a petition for exemption from the 1978 standard (43 FR 19311; May 4, 1978) and a proposed decision to grant an exemption to Excalibur for the 1978 model year (43 FR 33268; July 31, 1978).

No comments were submitted in response to the notice of receipt of the petition.

Three comments were submitted in response to the proposed decision. One of these comments was submitted by a private citizen, who supported the proposed exemption, because he believed that Excalibur produced an excellent product. The other two comments, both of which opposed the proposed exemption, were submitted by public interest groups. The objections centered primarily on the suggestion that the proposed exemption for Excalibur was contrary to the Congressional

intent, that the agency had erroneously determined Excalibur's maximum feasible average fuel economy level, and that even if Excalibur's maximum feasible average fuel economy level had correctly been determined, the agency should use its discretion to deny the requested exemption.

With regard to the first point, both commenters stated that granting an exemption to Excalibur would be contrary to the general Congressional intent to improving fuel economy. Congress, however, specifically included a provision whereby low volume manufacturers could be exempted from the generally applicable standard if that generally applicable standard were greater than the low volume manufacturer's maximum feasible average fuel economy and the agency establishes an alternative standard for the low volume manufacturer at its maximum feasible average fuel economy level. The inclusion of this provision strongly suggests that Congress intended that, in some circumstances, low volume manufacturers would be exempted from the generally applicable standard.

One commenter went on to argue that Congress had intended that the low volume exemptions only be available to manufacturers of moderately priced cars, and not to manufacturers of very expensive cars. In this commenter's view, the manufacturer of very expensive cars can pass on any civil penalties to its customers in the form of a price increase, and both manufacturer and customer could consider this as "conscience money".

No legislative history supporting this contention regarding Congressional intent is cited by the commenter or known to this agency. Congress did give the agency discretionary authority to grant or deny petitions. However, Congress did not direct the agency to use the discretion to deny exemption petitions by manufacturers of high-priced automobiles or to use it in any other particular manner.

This commenter went on to urge that there is no incentive for these low volume manufacturers to improve fuel economy, because an exemption can be expected. However, any exemption is required to be accompanied by an alternative standard set at that manufacturer's maximum feasible average fuel economy level. This will ensure that these manufacturers must improve their fuel economy, or pay a civil penalty.

Both public interest groups asserted that NHTSA had incorrectly determined Excalibur's maximum feasible average fuel economy. One commenter pointed out that had Excalibur adopted the Corvette engine in 1975, its automobiles would have better fuel economy for the 1978 model year. This point is true, but, as the notice of receipt of Excalibur's petition pointed out, the decision not to use the Corvette engine was made because of technical problems relating to the placement of the catalyst and the costs of certifying that vehicle. This decision was not clearly unreasonable when made, and was made before the passage of any fuel economy standards by Congress. Accordingly, the determination of maximum feasible average fuel economy for Excalibur was made assuming that Excalibur was using the engine currently in its vehicles, instead of another engine it might have installed in those vehicles. It should be emphasized that the time for selecting a different engine and improving the fuel economy of 1978 Excaliburs has passed.

Both of these commenters asserted that the agency erred in suggesting that the Nation's need to conserve energy would be negligibly affected by granting this exemption. However, neither of these commenters questioned the agency estimate that Excalibur's 1978 automobiles achieving an average fuel economy of 11.5 mpg rather than 18.0 mpg would result in the consumption of an additional 2.5 barrels of fuel per day. Since the United States currently consumes about 5 million barrels of fuel in passenger automobiles each day, the additional fuel consumed by Excalibur achieving an average fuel economy of 11.5 mpg represents .00005 percent of daily passenger car fuel consumption. The agency again concludes that this amount is insignificant. In any event, NHTSA again points out that no excess fuel is used if Excalibur's standard is set at its maximum feasible level instead of some higher level.

Both commenters urged that even if Excalibur's excess use of fuel is minor, the excess use by all low volume manufacturers would not be minor. The additional fuel consumption by all low volume manufacturers who have petitioned for exemption the 1978 model year achieving their maximum feasible average fuel economy levels rather than the generally applicable standard of 18.0 mpg will amount to about 64 barrels of fuel per day. This total represents about .0013 percent of daily passenger car fuel use, and is still small enough for this agency to conclude that it is an insignificant amount. More important, setting standards above these manufacturer's maximum feasible levels would not result in additional fuel savings.

The final reason suggested by the commenters for denying Excalibur's petition for exemption was that the agency should exercise its discretion to deny the petition on the grounds that it is contrary to the general goal of energy conservation and that an exemption would erode public support for the fuel economy program. This agency believes that the language in section 502(c) specifying that the agency may exempt low volume manufacturers indicates that Congress intended this agency to apply a test of whether granting an exemption would be generally consistent with the purposes of the Act. The main purpose of the Act is conserving energy. Establishing standards above the maximum feasible average fuel economy for Excalibur would not conserve any energy, since the alternative standard is based on the premise that it is not possible for Excalibur to achieve better fuel economy than its maximum feasible level.

As to the comments stating that an exemption for Excalibur would endanger public support for the program, this agency does not agree that requiring very small manufacturers like Excalibur to comply with standards set at their maximum feasible level instead of the maximum feasible level for larger manufacturers will necessarily erode public support for the program. Instead, the agency believes that the process of exempting the very small manufacturers will be viewed as equitably adjusting the generally applicable fuel economy standards to the lesser capabilities of these manufacturers.

For these reasons the agency had determined that the maximum feasible average fuel economy for Excalibur in the 1978 model year is 11.5 mpg. Therefore, this agency is exempting Excalibur from the generally applicable standard of 18.0 mpg for the 1978 model year and is establishing an alternative standard for Excalibur at 11.5 mpg for the 1978 model year.

Accordingly, 49 CFR Part 531 is amended by adding § 531.5(b)(5), to read as set forth below.

§ 531.5 Fuel economy standards.

* * * * *

(b) The following manufacturers shall comply with the standards indicated below for the specified model years:

(1) * * *
(2) * * *
(3) * * *
(4) [Reserved]
(5) Excalibur Automobile Corp.

AVERAGE FUEL ECONOMY STANDARD

*Model year* 1978, *Miles per gallon* 11.5.

The program official and attorney principally responsible for the development of this decision are Douglas Pritchard and Stephen Kratzke, respectively.

(Sec. 9, Pub. L. 89-670, 80 Stat. 931 (49 U.S.C. 1657); sec. 301, Pub. L. 94-163, 89

Stat. 901 (15 U.S.C. 2002); delegation of authority at 41 FR 25015, June 22, 1976.)

Issued on January 11, 1979.

JOAN CLAYBROOK,
*Administrator.*

[FR Doc. 79-1807 Filed 1-17-79 8:45 am]

---

[4910-59-M]

[Docket No. LVM 77-02; Notice 3]

## PART 531—PASSENGER AUTOMOBILE AVERAGE FUEL ECONOMY STANDARDS

### Exemption from Average Fuel Economy Standards

AGENCY: National Highway Traffic Safety Administration, Department of Transportation.

ACTION: Final decision to grant exemption from average fuel economy standards.

SUMMARY: This notice exempting Rolls-Royce Motors Inc. (Rolls-Royce) from the generally applicable average fuel economy standard of 18.0 miles per gallon (mpg) for 1978 model year passenger automobiles and establishing an alternative standard is issued in response to a petition by Rolls-Royce. The alternative standard is 10.7 mpg.

DATE: The exemption and alternative standard apply in the 1978 model year.

FOR FURTHER INFORMATION CONTACT:

Douglas Pritchard, Office of Automotive Fuel Economy Standards, National Highway Traffic Safety Administration, Washington, D.C. 20590 (202-755-9384).

SUPPLEMENTARY INFORMATION: The National Traffic Safety Administration (NHTSA) is exempting Rolls-Royce from the generally applicable passenger automobile average fuel economy standard for the 1978 model year and establishing an alternative standard.

This exemption is issued under the authority of section 502(c) of Title V of the Act. Section 502(c) provides that a manufacturer of passenger automobiles that manufactures fewer than 10,000 vehicles annually may be exempted from the generally applicable average fuel economy standard if that generally applicable standard is greater than the low volume manufacturer's maximum feasible average fuel economy and if the NHTSA establishes an alternative standard applicable to that manufacturer at the manufacturer's maximum feasible average fuel economy. In determining the manufacturer's maximum feasible average fuel economy, section 502(e) of the Act requires the NHTSA to consider:

(1) Technological feasibility;
(2) Economic practicability;
(3) The effect of other Federal motor vehicle standards on fuel economy; and
(4) The need of the Nation to conserve energy.

This final rule was preceded by a notice announcing the receipt of a petition for exemption from the 1978 standard (42 FR 64171; December 22, 1977) and a proposed decision to grant an exemption to Rolls-Royce for the 1978 model year (43 FR 30081; July 13, 1978). Only one comment on the notice of receipt was submitted. That commenter urged that Rolls-Royce be exempted "in the name of common sense".

Eleven comments were received in response to the proposed decision, all of which opposed the proposed exemption. These comments raised three main points: Congress never intended that Rolls-Royce receive an exemption; the agency had incorrectly determined the maximum feasible average fuel economy for Rolls-Royce; and even if Rolls-Royce were eligible and had a maximum feasible average fuel economy of less than the generally applicable standard of 18.0 miles per gallon (mpg), NHTSA should use its discretion to deny the Rolls-Royce petition.

With respect to the first point, several commenters stated that it was unfair for some manufacturers to be forced to comply with a standard of 18 mpg, while others were exempted from that requirement. Congress determined, however, through section 502(c) of the Act, to authorize this agency to exempt low volume manufacturers from the generally applicable standard and establish a standard for those manufacturers at the level of their maximum feasible average fuel economy. Congress took this action in recognition of a variety of factors, including the limited engineering staff and financial resources of these manufacturers. Low volume manufacturers can be exempted from the generally applicable standards only if they cannot comply with those standards, and if alternative standards are set.

Other commenters said that the agency should require fuel economy improvements by all manufacturers, not permit certain manufacturers to ignore the generally applicable fuel economy standards. The agency is requiring all exempted manufacturers to comply with an alternative standard set at their maximum feasible average fuel economy. A requirement that these manufacturers achieve some higher fuel economy level would not save any additional fuel, since the alternative standard is based on the premise that it is not possible for a manufacturer to achieve a higher fuel economy level. Hence, exempting low volume manufacturers from the generally applicable standards and establishing an alternative standard at their maximum feasible level does not result in any additional use of fuel.

In this vein, one other commenter suggested that Congress had intended that the low volume exemptions only be available to manufacturers of moderately priced cars, and not to manufacturers of very expensive cars. In this commenter's view, the manufacturer of very expensive cars can pass on any civil penalties to its customers in the form of a price increase. Given the price of these cars, this commenter concluded that the increase would not cause any noticeable decrease in sales, while an exemption would only serve to keep prices down for the purchasers of these expensive vehicles.

No legislative history supporting this contention regarding Congressional intent is cited by the commenter or known to this agency. Congress did give the agency discretionary authority to grant or deny petitions. However, Congress did not direct the agency to use that discretion to deny exemption petitions by manufacturers of high-priced automobiles or to use it in any other particular manner.

Other comments suggested that it was unfair to grant exemptions only to foreign companies, while requiring all domestic companies to comply with the generally applicable standard. Both domestic and foreign low volume manufacturers are eligible for exemptions. Indeed, the first two low volume manufacturers to receive exemptions were domestic manufacturers, Avanti and Checker.

The second major objection raised by the commenters concerned this agency's determination of the maximum feasible average fuel economy for Rolls-Royce. No commenters suggested that the consideration of technological feasibility or the effect of other Federal motor vehicle standards on fuel economy had been in error. In this connection, it should be emphasized that the time for improving the fuel economy of 1978 Rolls-Royces has passed. However, several commenters stated that this agency had not properly considered the economic practicability or the need of the Nation to conserve energy.

One commenter argued that this agency had not considered the ability of Rolls-Royce to pay the civil penalty which would be assessed if Rolls-Royce failed to comply with the higher generally applicable standard. The agency agrees that it has confined itself under section 502(c) to an analysis of the financial capabilities of the petitioner to improve fuel economy by

using smaller engines, lighter components, and the like, and does not consider the ability to absorb any potential civil penalties.

The reason for so limiting the analysis of economic practicability in setting alternative standards for individual manufacturers is that the agency believes that Congress intended the maximum feasible concept to result in an alternative set at the highest average fuel economy level a manufacturer could reasonably be expected to achieve in a given model year. If the ability to pay any civil penalty is considered as a part of economic practicability for an individual manufacturer, the resulting standard would be higher than the highest fuel economy level the manufacturer could achieve in that model year, and thus would impose an unavoidable civil penalty. This would not conserve any additional fuel since it would not cause that manufacturer to achieve higher fuel economy and would not apply to other manufacturers whose fuel economy could exceed the fuel economy of that manufacturer. Accordingly, the agency does not believe that Congress intended the ability to pay a civil penalty to be a part of economic practicability under these circumstances.

Other commenters suggested that NHTSA's determination that the need of the Nation to conserve energy would be negligibly affected by granting this exemption was erroneous. For instance, one commenter stated that it was unfair to consider exempting Rolls-Royce because of the insignificant amount of fuel involved, and compared this to a proposal allowing Cadillac drivers to drive at whatever speed they chose while requiring drivers of all other cars to observe posted speed limits, because of the small number of Cadillacs on the road. Congress has already decided the issue of fairness by authorizing the exemptions of low volume manufacturers. Further, the Act specifically directs the agency to consider the need of the nation to conserve energy, and when that need is negligibly affected by a given fuel economy, the agency must give weight to that fact.

None of these comments questioned the agency estimate that Rolls-Royce 1978 automobiles achieving an average fuel economy level of 10.7 mpg rather than 18.0 mpg would result in the consumption of an additional 30.4 barrels of fuel per day. Since the United States currently uses about 5 million barrels of fuel in passenger automobiles each day, the additional fuel consumed by Rolls-Royce represents .00061 percent of daily fuel consumption. The agency concludes that an amount this small is insignificant.

The final reason suggested by the commenters for denying an exemption for Rolls-Royce was that the agency should exercise its discretion to deny the exemption request on the grounds that it is contrary to the goal of energy conservation and will erode public support for the fuel economy program. This agency believes that the language in section 502(c) specifying that this agency may exempt low volume manufacturers indicates that Congress intended this agency to apply a test of whether granting an exemption would be generally consistent with the purposes of the Act. The main purpose of the Act is conserving energy. Establishing standards above the maximum feasible average fuel economy levels for Rolls-Royce would not conserve any additional energy, since the alternative standard is based on the premise that it is not possible for the company to achieve better fuel economy than the maximum feasible level.

As to the comments stating that exemptions would endanger public support for the fuel economy program, this agency does not agree that requiring very small manufacturers like Rolls-Royce to comply with standards set at their maximum feasible level instead of the maximum feasible level for larger manufacturers will necessarily erode public support for the program. Instead, the agency believes that the processs of exempting the very small manufacturers will be viewed as equitably adjusting the generally applicable fuel economy standards to the lesser capabilities of these manufacturers.

For the above reasons, the agency has determined that the maximum feasible average fuel economy for Rolls-Royce in the 1978 model year is 10.7 mpg. Therefore, the agency is exempting Rolls-Royce from the generally applicable standard of 18.0 mpg for the 1978 model year and establishing an alternative standard for Rolls-Royce at 10.7 mpg for the 1978 model year.

Accordingly, 49 CFR Part 531 is amended by § 531.5(b)(2) to read as set forth below.

§ 531.5 Fuel economy standards.

* * * * *

(b) The following manufacturers shall comply with the standards indicated below for the specified model years:

* * * * *

(2) Rolls-Royce Motors Inc.

AVERAGE FUEL ECONOMY STANDARD

*Model year*, 1978.
*Miles per gallon*, 10.7.

The program official and attorney principally responsibile for the development of this decision are Douglas Pritchard and Stephen Kratzke, respectively.

AUTHORITY: Sec. 9, Pub. L. 89-670, 80 Stat. 931 (49 U.S.C. 1657); sec. 301, Pub. L. 94-163, 89 Stat. 901 (15 U.S.C. 2002); delegation of authority at 49 FR 25015, June 22, 1976.

Issued on JANUARY 11, 1979.

JOAN CLAYBROOK,
*Administrator.*

(FR Doc. 79-1808 Filed 1-17-79; 8:45 am)

---

[7035-01-M]

## CHAPTER X—INTERSTATE COMMERCE COMMISSION

### SUBCHAPTER A—GENERAL RULES AND REGULATIONS

[Service Order No. 1327, Amdt. No. 1]

## PART 1033—CAR SERVICE

### Brillion & Forest Junction Railroad Co. Authorized To Operate Over Tracks Abandoned by Chicago & North Western Transportation Co.

AGENCY: Interstate Commerce Commission.

ACTION: Emergency Order, Amendment No. 1 to Service Order No. 1327.

SUMMARY: The Chicago & North Western Transportation Co. (CNW), in Docket AB-1 Sub. No. 52, has been authorized to abandon its line between Rosemer, Wisconsin, and Forest Junction, Wisconsin. A new railroad, the Brillion and Forest Junction, has been formed by a group of shippers located in Brillion, Wisconsin, to acquire and operate that portion of the line abandoned by the CNW between Brillion and Forest Junction. Service Order No. 1327 authorizes the Brillion and Forest Junction to operate that portion of the line in order to provide uninterrupted rail service to shippers located at Brillion. Service Order No. 1327 is printed in full in Volume 43 of the FEDERAL REGISTER at page 22212. Amendment No. 1 extends the order for six months.

DATES: Effective 11:59 p.m., January 15, 1979. Expires 11:59 p.m., July 15, 1979.

FOR FURTHER INFORMATION CONTACT:

Charles C. Robinson, Chief, Utilization and Distribution Branch, Interstate Commerce Commission, Washington, D.C., 20423, Telephone (202) 275-7840, Telex 89-2742.

Decided: January 10, 1979.

Upon further consideration of Service Order No. 1327 (43 FR 22212), and good cause appearing therefor:

*It is ordered,* that § 1033.1327 *Brillion & Forest Junction Railroad Co. authorized to operate over tracks abandoned by Chicago & North Western Transportation Co.*

Service Order No. 1327 is amended by substituting the following paragraph (f) for paragraph (f) thereof:

(f) *Expiration date.* The provisions of this order shall expire at 11:59 p.m., July 15, 1979, unless otherwise modified, changed or suspended by order of this Commission.

*Effective date.* This amendment shall become effective at 11:59 p.m., January 15, 1979.

(49 U.S.C. (10304-10305 and 11121-11126).)

This amendment shall be served upon the Association of American Railroads, Car Service Division, as agent of all railroads subscribing to the car service and car hire agreement under the terms of that agreement, and upon the American Short Line Railroad Association. Notice of this amendment shall be given to the general public by depositing a copy in the Office of the Secretary of the Commission at Washington, D.C., and by filing a copy with the Director, Office of the Federal Register.

H. G. HOMME, JR.,
*Secretary.*

[FR Doc. 79-1831 Filed 1-17-79; 8:45 am]

---

[7035-01-M]

[Service Order No. 1339, Amdt. No. 1]

## PART 1033—CAR SERVICE

### Chicago, Milwaukee, St. Paul & Pacific Railroad Co. Authorized To Operate Over Tracks of Union Pacific Railroad Co.

AGENCY: Interstate Commerce Commission.

ACTION: Emergency Order, Amendment No. 1 to Service Order No. 1339.

SUMMARY: Due to deteriorated track conditions between Maytown, Washington, and Helsing Junction, Washington, the Chicago, Milwaukee, St. Paul and Pacific Railroad Company is unable to continue service over that line. Service Order No. 1339 authorizes that railroad to operate over tracks of the Union Pacific Railroad Company between Blakeslee Junction Interlocker, Washington, and Helsing Junction, Washington. The Order is printed in full in Volume 43 of the FEDERAL REGISTER at page 43719. Amendment No. 1 extends the order until July 15, 1979.

DATES: Effective 11:59 p.m., January 15, 1979. Expires 11:59 p.m., July 15, 1979.

FOR FURTHER INFORMATION CONTACT:

C. C. Robinson, Chief, Utilization and Distribution Branch, Interstate Commerce Commission, Washington, D.C., 20423, Telephone (202) 275-7840, Telex 89-2742.

Decided: January 10, 1979.

Upon further consideration of Service Order No. 1339 (43 FR 43719), and good cause appearing therefor:

*It is ordered,* that § 1033.1339 *Chicago, Milwaukee, St. Paul and Pacific Railroad Company authorized to operate over tracks of Union Pacific Railroad Company,* Service Order No. 1339 is amended by substituting the following paragraph (e) for paragraph (e) thereof:

(e) *Expiration date.* The provisions of this order shall expire at 11:59 p.m., July 15, 1979, unless otherwise modified, changed or suspended by order of this Commission.

*Effective date.* This amendment shall become effective at 11:59 p.m., January 15, 1979.

(49 U.S.C. (10304-10305 and 11121-11126).)

This amendment shall be served upon the Association of American Railroads, Car Service Division, as agent of all railroads subscribing to the car service and car hire agreement under the terms of that agreement, and upon the American Short Line Railroad Association. Notice of this amendment shall be given to the general public by depositing a copy in the Office of the Secretary of the Commission, at Washington, D.C., and by filing a copy with the Director, Office of the Federal Register.

By the Commission, Railroad Service Board, members Joel E. Burns, Robert S. Turkington and John R. Michael.

H. G. HOMME, Jr.,
*Secretary.*

[FR Doc. 79-1815 Filed 1-17-79; 8:45 am]

---

[7035-01-M]

[Service Order No. 1331, Amdt. No. 1]

## PART 1033—CAR SERVICE

### South Central Tennessee Railroad Co. Authorized To Operate Over Tracks Abandoned by Louisville & Nashville Railroad Co.

AGENCY: Interstate Commerce Commission.

ACTION: Emergency Order, Amendment No. 1 to Service Order No. 1331.

SUMMARY: The Louisville and Nashville Railroad Company (LN), in Docket AB-2 (Sub-No. 5), has been authorized to abandon its line between Colesburg, Tennessee, and Hohenwald, Tennessee. A new railroad, the South Central Tennessee Railroad Company, has been formed to acquire and operate this line. Service Order No. 1331 authorizes the South Central Tennessee Railroad Company to operate that portion of the line in order to provide uninterrupted rail service to shippers located on this line. The order is printed in full in Volume 43 of the FEDERAL REGISTER at page 29126. Amendment No. 1 extends the order for six months.

DATES: Effective 11:59 p.m., January 15, 1979. Expires 11:59 p.m., July 15, 1979.

FOR FURTHER INFORMATION CONTACT:

Charles C. Robinson, Chief, Utilization and Distribution Branch, Interstate Commerce Commission, Washington, D.C., 20423, Telephone (202) 275-7840, Telex 89-2742.

Decided: January 10 1979.

Upon further consideration of Service Order No. 1331 (43 FR 29126), and good cause appearing therefor:

*It is ordered,* That § 1033.1331 *South Central Tennessee Railroad Company authorized to operate over tracks abandoned by Louisville and Nashville Railroad Company*

Service order No. 1331 is amended by substituting the following paragraph (f) for paragraph (f) thereof:

(f) *Expiration date.* The provisions of this order shall expire at 11:59 p.m., July 15, 1979, unless otherwise modified, changed or suspended by order of this Commission.

*Effective date.* This amendment shall become effective at 11:59 p.m., January 15, 1979.

(49 U.S.C. (10304-10305 and 11121-11126).)

This amendment shall be served upon the Association of American Railroads, Car Service Division, as agent of all railroads subscribing to the car service and car hire agreement under the terms of that agreement, and upon the American Short Line Railroad Association. Notice of this amendment shall be given to the general public by depositing a copy in the Office of the Secretary of the Commission, at Washington, D.C., and by filing a copy with the Director, Office of the Federal Register.

By the Commission, Railroad Service Board, members Joel E. Burns,

Robert S. Turkington and John R. Michael.

H. G. HOMME, Jr.,
*Secretary.*

[FR Doc. 79-1830 Filed 1-17-79; 8:45 am]

---

[7035-01-M]

[Service Order No. 1325, Amdt. No. 2]

## PART 1033—CAR SERVICE

### The Atchison, Topeka and Santa Fe Railway Co. Authorized To Operate Unit-Grain Train Comprised of 60 Cars

AGENCY: Interstate Commerce Commission.

ACTION: Emergency Order (Amendment No. 2 to Service Order No. 1325).

SUMMARY: There is a severe shortage of both covered hopper cars and locomotives on the Atchison, Topeka and Santa Fe Railroad (ATSF) for transporting shipments of grain and related commodities. Service Order No. 1325 authorizes the ATSF to waive certain tariff requirements requiring the shipment of 75 carloads of grain in a single train and to apply in lieu thereof a minimum weight of 5,700 net tons per shipment in not to exceed 60 cars from ATSF origins in rate zone F and west to California destinations. The reduced train size will enable the ATSF to make a more equitable distribution of its covered hopper cars and to secure more efficient utilization of its locomotives. Service Order No. 1325 is published in full in volume 43 of the FEDERAL REGISTER at page 19396. Amendment No. 2 extends the order until May 15, 1979.

DATES: Effective 11:59 p.m., January 15, 1979. Expires 11:59 p.m., May 15, 1979.

FOR FURTHER INFORMATION CONTACT:

C. C. Robinson, Chief, Utilization and Distribution Branch, Interstate Commerce Commission, Washington, D.C. 20423. Telephone (202) 275-7840. Telex 89-2742.

Decided: January 10, 1979.

Upon further consideration of Service Order No. 1325 (43 FR 19396 and 39103), and good cause appearing therefor:

*It is ordered,* That § 1033.1325 *The Atchison, Topeka and Santa Fe Railway Company authorized to operate unit-grain train comprised of 60 cars,* Service Order No. 1325 is amended by substituting the following paragraph (e) for paragraph (e) thereof:

(e) *Expiration date.* The provisions of this order shall expire at 11:59 p.m., May 15, 1979, unless otherwise modified, changed or suspended by order of this Commission.

*Effective date.* This amendment shall become effective at 11:59 p.m., January 15, 1979.

(49 U.S.C. (10304-10305 and 11121-11126).)

This amendment shall be served upon the Association of American Railroads, Car Service Division, as agent of all railroads subscribing to the car service and car hire agreement under the terms of that agreement, and upon the American Short Line Railroad Association. Notice of this amendment shall be given to the general public by depositing a copy in the Office of the Secretary of the Commission at Washington, D.C., and by filing a copy with the Director, Office of the Federal Register.

By the Commission, Railroad Service Board, members Joel E. Burns, Robert S. Turkington and John R. Michael.

H. G. HOMME, Jr.,
*Secretary.*

[FR Doc. 79-1816 Filed 1-7-79; 8:45 am]

---

[7035-01-M]

[Amdt. No. 1 to Service Order No. 1336]

## PART 1033—CAR SERVICE

### MISSOURI-KANSAS-TEXAS RAILROAD CO. AUTHORIZED TO OPERATE OVER TRACKS OF ST. LOUIS-SAN FRANCISCO RAILWAY CO.

AGENCY: Interstate Commerce Commission.

ACTION: Emergency Order Amendment No. 1 to Service Order No. 1336.

SUMMARY: Due to deteriorated track conditions between Labette, Kansas, and Columbus, Kansas, Missouri-Kansas-Texas Railroad Company is unable to continue operation over this line. Service Order No. 1336 authorizes that railroad to operate over tracks of the St. Louis-San Francisco Railway Company between Oswego, Kansas, and Columbus, Kansas. The order is printed in full in Volume 43 of the FEDERAL REGISTER at page 40020. Amendment No. 1 extends the order until July 31, 1979.

DATES: Effective 11:59 p.m., January 15, 1979. Expires 11:59 p.m., July 31, 1979.

FOR FURTHER INFORMATION CONTACT:

Charles C. Robinson, Chief, Section of Rail and Pipeline Operations, Utilization and Distribution Branch, Interstate Commerce Commission, Washington, D.C., 20423. Telephone (202) 275-7840. Telex 89-2742.

Decided: January 10, 1979.

Upon further consideration of Service Order No. 1336 (43 FR 40020), and good cause appearing therefor:

*It is ordered,* that § *1033.1336 Missouri-Kansas-Texas Railroad Company authorized to operate over tracks of St. Louis-San Francisco Railway Company,* Service Order No. 1336 is amended by substituting the following paragraph (e) for paragraph (e) thereof:

(e) *Expiration date.* The provisions of this order shall expire at 11:59 p.m., July 31, 1979, unless otherwise modified, changed or suspended by order of this Commission.

*Effective date.* This amendment shall become effective at 11:59 p.m., January 15, 1979.

(49 U.S.C. (10304-10305 and 11121-11126).)

This amendment shall be served upon the Association of American Railroads, Car Service Division, as agent of all railroads subscribing to the car service and car hire agreement under the terms of that agreement, and upon the American Short Line Railroad Association. Notice of this amendment shall be given to the general public by depositing a copy in the Office of the Secretary of the Commission, at Washington, D.C., and by filing a copy with the Director, Office of the Federal Register.

By the Commission, Railroad Service Board, members Joel E. Burns, Robert S. Turkington and John R. Michael.

H. G. HOMME, Jr.,
*Secretary.*

[FR Doc. 79-1819 Filed 1-17-79; 8:45 am]

---

[7035-011-M]

[Amdt. No. 2 to Service Order No. 1294]

## PART 1033—CAR SERVICE

### INDIANA INTERSTATE RAILWAY CO., INC., AUTHORIZED TO OPERATE OVER TRACKS OWNED BY THE CITY OF BICKNELL, IND.

AGENCY: Interstate Commerce Commission.

ACTION: Emergency Order (Amendment No. 2 to Service Order No. 1294).

SUMMARY: Service Order No. 1294 authorizes the Indiana Interstate Railway Company, Inc., to operate over 1.1 miles of track leased from the City of Bicknell, Indiana, in order to provide essential railroad service to industries served by that track. Amendment No. 2 extends this order until July 15, 1979. The order is printed in full in Volume 43 of the FEDERAL REGISTER at page 1092.

DATES: Effective 11:59 p.m., January 15, 1979. Expires 11:59 p.m., July 15, 1979.

FOR FURTHER INFORMATION CONTACT:

C. C. Robinson, Chief, Utilization and Distribution Branch, Interstate Commerce Commission, Washington, D.C. 20423. Telephone (202) 275-7840. Telex 89-2742.

Decided: January 10, 1979.

Upon further consideration of Service Order No. 1294 (43 F.R. 1092 and 29007), and good cause appearing therefor:

*It is ordered,* that *§ 1033.1294 Indiana Interstate Railway Company, Inc., authorized to operate over tracks owned by the City of Bicknell, Indiana,* Service Order No. 1294 is amended by substituting the following paragraph (f) for paragraph (f) thereof:

(f) *Expiration date.* The provisions of this order shall expire at 11:59 p.m., July 15, 1979, unless otherwise modified, changed or suspended by order of this Commission.

*Effective date.* This amendment shall become effective at 11:59 p.m., January 15, 1979.

(49 U.S.C. (10304-10305 and 11121-11126).)

This amendment shall be served upon the Association of American Railroads, Car Service Division, as agent of all railroads subscribing to the car service and car hire agreement under the terms of that agreement, and upon the American Short Line Railroad Association. Notice of this amendment shall be given to the general public by depositing a copy in the Office of the Secretary of the Commission at Washington, D.C., and by filing a copy with the Director, Office of the Federal Register.

By the Commission, Railroad Service Board, members Joel E. Burns, Robert S. Turkington and John R. Michael.

H. G. HOMME, Jr.,
*Secretary.*

[FR Doc. 79-1820 Filed 1-17-79; 8:45 am]

---

[7035-01-M]

[Second Revised Service Order No. 1323]

## PART 1033—CAR SERVICE

## DISTRIBUTION OF FREIGHT CARS

AGENCY: Interstate Commerce Commission.

ACTION: Emergency Order Second Revised Order No. 1323.

SUMMARY: There is a shortage of tri-level auto rack flat cars on the Union Pacific Railroad (UP) for the shipment of automobiles. Bi-level auto rack cars are available to this railroad but cannot be used because of tariff provisions requiring the use of tri-level cars. Second Revised Service Order No. 1323 authorizes the UP to substitute three bi-level cars for each two tri-level cars ordered by shippers for transporting automobiles.

DATES: Effective 11:59 p.m., January 15, 1979. Expires 11:59 p.m., May 31, 1979.

FOR FURTHER INFORMATION CONTACT:

C. C. Robinson, Chief, Utilization and Distribution Branch, Interstate Commerce Commission, Washington, D.C. 20423. Telephone (202) 275-7840. Telex 89-2742.

Decided: January 10, 1979.

There are shortages of tri-level multi-level auto rack flat cars on the Union Pacific Railroad Company (UP) required to transport automobiles subject to tariff restrictions requiring the use of such tri-level cars. This railroad has available supplies of bi-level cars of similar types which could be used for transporting these automobiles if tariff provisions permitted. The economic loss suffered by shippers dependent upon the UP for their car supplies can be alleviated by the substitution of bi-level cars for tri-level cars at the ratio of three bi-level cars for each two tri-level cars ordered.

In the opinion of the Commission, present regulations and practices with respect to the use of supply of auto rack flat cars are ineffective to overcome these shortages of auto rack flat cars and an emergency exists requiring immediate action. Accordingly, the Commission finds that notice and public procedure are impracticable and contrary to the public interest, and that good cause exists for making this order effective upon less than thirty days' notice.

*It is ordered,*

§ 1033.1323 Distribution of frieght cars.

*(a) Subject to the concurrence of the shipper the Union Pacific Railroad Company (UP) may substitute three bi-level auto rack flat cars, listed in the Official Railway Equipment Register, I.C.C.-R.E.R. No. 409, issued by W. J. Trezise, or successive issues thereof, as having mechanical designation "FA" for each two tri-level auto rack flat cars ordered by the shipper for transporting automobiles.

(b) The provisions of this order shall apply to intrastate, interstate and foreign commerce.

(c) *Rates and Minimum Weights Applicable.* The rates to be applied to shipments for which three bi-level cars have been substituted for two tri-level cars ordered as authorized by Section (a) of this order shall be the rates applicable to the larger cars ordered. The minimum weight to be applied to each group of three bi-level cars substituted for two tri-level cars shall be the combined minimum weights applicable to the two tri-level cars ordered.

(d) *Billing to be Endorsed.* The carrier substituting smaller cars for larger cars as authorized by Section (a) of this order shall place the following endorsement on the bill of lading and on the waybills authorizing movement of the car:

Two tri-level cars ordered. Three bi-level cars furnished authority I.C.C. Second Revised Service Order No. 1323.

(e) *Exception.* This order shall not apply to shipments subject to tariff provisions which require that cars be furnished by the shipper.

(f) *Exceptions.* Exceptions to this order may be authorized to railroads by the Railroad Service Board, Washington, D. C. 20423. Requests for such exception must be submitted in writing, or confirmed in writing, and must clearly state the points at which such exceptions are requested and the reason therefor.

(g) *Rules and Regulations Suspended.* The operation of all rules, regulations, or tariff provisions is suspended insofar as they conflict with the provisions of this order.

(h) *Effective date.* This order shall become effective at 11:59 p.m., January 15, 1979.

(i) *Expiration date.* This order shall expire at 11:59 p.m., May 31, 1979, unless otherwise modified, changed or suspended by order of this Commission.

(49 U.S.C. (10304-10305 and 11121-11126).)

This order shall be served upon the Association of American Railroads, Car Service Division, as agent of the railroads subscribing to the car service and car hire agreement under the terms of that agreement and upon the American Short Line Railroad Association. Notice of this order shall be given to the general public by depositing a copy in the Office of the Secretary of the Commission at Washington, D.C., and by filing a copy with the Director, Office of the Federal Register.

By the Commission, Railroad Service Board, members Joel E. Burns, Robert S. Turkington and John R. Michael.

H. G. HOMME, Jr.
*Secretary.*

[FR Doc. 79-1821 Filed 1-17-79; 8:45 am]

---

* St. Louis-San Francisco Railway Company deleted.

[7035-01-M]

[Amdt. No. 4 to Service Order No. 1316]

## PART 1033—CAR SERVICE

### CHICAGO AND NORTH WESTERN TRANSPORTATION CO. AUTHORIZED TO OPERATE OVER TRACKS OF CHICAGO, MILWAUKEE, ST. PAUL AND PACIFIC RAILROAD CO. AT APPLETON, WIS.

AGENCY: Interstate Commerce Commission.

ACTION: Emergency Order (Amendment No. 4 to Service Order No. 1316).

SUMMARY: The tracks of the Chicago, Milwaukee, St. Paul and Pacific Railroad Company (MILW) between Menasha, Wisconsin, and Appleton, Wisconsin, have deteriorated and can no longer be used forcing the termination of rail service to shippers in Appleton served by the MILW. The Chicago and North Western Transportation Company (CNW) connects with the MILW in Appleton and is able to provide service to those shippers by operations over the tracks of the MILW in Appleton. Service Order No. 1316 authorizes the CNW to operate over tracks of the MILW in Appleton, Wisconsin for the purpose of providing continued railroad service to shippers served by those tracks. Service Order No. 1316 is published in full in Volume 43 of the FEDERAL REGISTER at page 14668. Amendment No. 4 extends this order until July 15, 1979.

DATES: Effective 11:59 p.m., January 15, 1979. Expires 11:59 p.m., July 15, 1979.

FOR FURTHER INFORMATION CONTACT:

C. C. Robinson, Chief, Utilization and Distribution Branch, Interstate Commerce Commission, Washington, D.C. 20423. Telephone (202) 275-7840. Telex 89-2742.

Decided: January 10, 1979.

Upon further consideration of Service Order No. 1316 (43 F.R. 14668, 28497, 39796 and 51024), and good cause appearing therefor:

*It is ordered*, that § *1033.1316 Chicago and North Western Transportation Company authorized to operate over tracks of Chicago, Milwaukee, St. Paul and Pacific Railroad Company at Appleton, Wisconsin*, Service Order No. 1316 is amended by substituting the following paragraph (e) for paragraph (e) thereof:

(e) *Expiration date.* The provisions of this order shall expire at 11:59 p.m., July 15, 1979, unless otherwise modified, changed or suspended by order of this Commission.

*Effective date.* This amendment shall become effective at 11:59 p.m., January 15, 1979.

(49 U.S.C. (10304-10305 and 11121-11126).)

This amendment shall be served upon the Association of American Railroads, Car Service Division, as agent of all railroads subscribing to the car service and car hire agreement under the terms of that agreement, and upon the American Short Line Railroad Association. Notice of this amendment shall be given to the general public by depositing a copy in the Office of the Secretary of the Commission at Washington, D.C., and by filing a copy with the Director, Office of the Federal Register.

By the Commission, Railroad Service Board, members Joel E. Burns, Robert S. Turkington and John R. Michael.

H. G. HOMME, Jr.,
*Secretary.*

[FR Doc. 79-1822 Filed 1-17-79; 8:45 am]

---

[7035-01-M]

[Service Order No. 1352]

## PART 1033—CAR SERVICE

### CHICAGO & NORTH WESTERN TRANSPORTATION CO. AUTHORIZED TO OPERATE OVER TRACKS OF CHICAGO, MILWAUKEE, ST. PAUL & PACIFIC RAILROAD CO. AT FOND DU LAC, WIS.

AGENCY: Interstate Commerce Commission.

ACTION: Emergency Order Service Order No. 1352.

SUMMARY: The lines of the Chicago, Milwaukee, St. Paul and Pacific Railroad Company (MILW) serving Fond du Lac, Wisconsin, are inoperable because of heavy snow at this location, which is depriving industries located adjacent to the MILW tracks at this location of railroad service. Service Order No. 1352 authorizes the Chicago and North Western Transportation Company to operate over tracks of the MILW in Fond du Lac in order to restore railroad service to these shippers.

DATES: Effective 3:00 p.m., January 12, 1979. Expires 11:59 p.m., January 19, 1979.

FOR FURTHER INFORMATION CONTACT:

C. C. Robinson, Chief, Utilization and Distribution Branch, Interstate Commerce Commission, Washington, D.C., 20423. Telephone (202) 275-7840. Telex 89-2742.

SUPPLEMENTARY INFORMATION: The Order is printed in full below.

Decided: January 12, 1979.

The lines of the Chicago, Milwaukee, St. Paul and Pacific Railroad Company (MILW) serving Fond du Lac, Wisconsin, have become inoperable because of heavy snow. Numerous shippers located adjacent to the tracks of the MILW have been deprived of essential railroad service because of the inability of the MILW to switch the industries at Fond du Lac. The Chicago and North Western Transportation Company (CNW) has agreed to operate over the tracks of the MILW at Fond du Lac in order to restore essential railroad service to these shippers. The MILW has consented to such use of its tracks by the CNW.

It is the opinion of the Commission that an emergency exists requiring the operation of CNW trains over these tracks of the MILW in the interest of the public; that notice and public procedure are impracticable and contrary to the public interest; and that good cause exists for making this order effective upon less than thirty days' notice.

*It is ordered*, that § *1033.1352 Chicago and North Western Transportation Company authorized to operate over tracks of Chicago, Milwaukee, St. Paul and Pacific Railroad Company at Fond du Lac, Wisconsin.*

(a) The Chicago and North Western Transportation Company (CNW) is authorized to operate over tracks of the Chicago, Milwaukee, St. Paul and Pacific Railroad Company (MILW) at Fond du Lac, Wisconsin, for the purpose of serving industries located adjacent to such tracks.

(b) *Application.* The provisions of this order shall apply to intrastate, interstate and foreign traffic.

(c) *Rates applicable.* Inasmuch as this operation by the CNW over tracks of the MILW is deemed to be due to carrier's disability, the rates applicable to traffic moved by the CNW over the tracks of the MILW shall be the rates which were applicable on the shipments at the time of shipment as originally routed.

(d) *Effective date.* This order shall become effective at 3:00 p.m., January 12, 1979.

(e) *Expiration date.* The provisions of this order shall expire at 11:59 p.m., January 19, 1979, unless otherwise modified, changed or suspended by order of this Commission.

(49 U.S.C. (10304-10305 and 11121-11126).)

This order shall be served upon the Association of American Railroads, Car Service Division, as agent of all railroads subscribing to the car service and car hire agreement under the terms of that agreement and upon the American Short Line Railroad Associ-

ation. Notice of this order shall be given to the general public by depositing a copy in the Office of the Secretary of the Commission at Washington, D.C., and by filing a copy with the Director, Office of the Federal Register.

By the Commission, Railroad Service Board, members Joel E. Burns, Robert S. Turkington and John R. Michael. Member John R. Michael not participating.

H. G. HOMME, Jr.,
*Secretary.*

[FR Doc. 79-1823 Filed 1-17-79; 8:45 am]

---

[7035-01-M]

[Amdt. No. 2 to Revised Service Order No. 1318]

## PART 1033—CAR SERVICE

### REGULATIONS FOR RETURN OF HOPPER CARS

AGENCY: Interstate Commerce Commission.

ACTION: Emergency Order. Amendment No. 2 to Revised Service Order No. 1318.

SUMMARY: There is a severe shortage of hopper cars on twelve railroads named in Revised Service Order No. 1318. These carriers own large fleets of these cars. Because of traffic flow patterns, substantial numbers of these cars are shipped to points located on the lines of other railroads and must be returned promptly to the car owners for reloading. Amendment No. 2 extends this order for six months. The order is printed in full in Volume 43 of the FEDERAL REGISTER at page 17360.

DATES: Effective 11:59 p.m., January 15, 1979. Expires 11:59 p.m., July 15, 1979.

FOR FURTHER INFORMATION CONTACT:

Charles C. Robinson, Chief, Utilization and Distribution Branch, Interstate Commerce Commission, Washington, D.C., 20423, Telephone (202) 275-7840, Telex 89-2742.

Decided January 10, 1979.

Upon further consideration of Revised Service Order No. 1318 (43 FR 17360 and 29008), and good cause appearing therefore:

*It is ordered,* that *§ 1033.1318 Regulations for return of hopper cars,* Revised Service Order No. 1318 is amended by substituting the following paragraph (g) for paragraph (g) thereof:

(g) *Expiration date.* The provisions of this order shall expire at 11:59 p.m., July 15, 1979, unless otherwise modified, changed or suspended by order of this Commission.

*Effective date.* This amendment shall become effective at 11:59 p.m., January 15, 1979.

(49 U.S.C. (10304-10305 and 11121-11126).)

This amendment shall be served upon the Association of American Railroads, Car Service Division, as agent of all railroads subscribing to the car service and car hire agreement under the terms of that agreement, and upon the American Short Line Railroad Association. Notice of this amendment shall be given to the general public by depositing a copy in the Office of the Secretary of the Commission at Washington, D.C., and by filing a copy with the Director, Office of the Federal Register.

By the Commission, Railroad Service Board, members Joel E. Burns, Robert S. Turkington and John R. Michael.

H. G. HOMME, Jr.,
*Secretary.*

[FR Doc. 79-1824 Filed 1-17-79; 8:45 am]

---

[7035-01-M]

[Amdt. No. 3 to Service Order No. 1270]

## PART 1033—CAR SERVICE

### CHESAPEAKE AND OHIO RAILWAY COMPANY AUTHORIZED TO OPERATE OVER TRACKS ABANDONED BY GRAND TRUNK WESTERN RAILROAD COMPANY

AGENCY: Interstate Commerce Commission.

ACTION: Emergency Order. Amendment No. 3 to Service Order No. 1270.

SUMMARY: Service Order No. 1270 authorizes The Chesapeake and Ohio Railway Company to operate over approximately 0.6 miles of track authorized to be abandoned by the Grand Trunk Western Railroad, between Ferrysburg, Michigan, and Grand Haven, Michigan. The trackage involved is owned by the Grand Trunk Western but is used as an integral part of The Chesapeake and Ohio's line between Holland, Michigan, and Muskegon, Michigan. The order also authorizes The Chesapeake and Ohio to operate over an additional 0.2 miles of track abandoned by the Grand Trunk Western in order to provide continued rail service to a shipper located adjacent to those tracks. The amendment extends the order for six months. The order is printed in full in Volume 42 of the FEDERAL REGISTER at page 38379.

DATES: Effective 11:59 p.m., January 15, 1979. Expires 11:59 p.m., July 15, 1979.

FOR FURTHER INFORMATION CONTACT:

Charles C. Robinson, Chief, Utilization and Distribution Branch, Interstate Commerce Commission, Washington, D.C., 20423, Telephone (202) 275-7840, Telex 89-2742.

Decided January 10, 1979.

Upon further consideration of Service Order No. 1270 (42 FR 38379, 43 FR 2725 and 36639), and good cause appearing therefor:

*It is ordered,* that *§ 1033.1270 The Chesapeake and Ohio Railway Company authorized to operate over tracks abandoned by Grand Trunk Western Railroad Company,* Service Order No. 1270 is amended by substituting the following paragraph (c) for paragraph (c) thereof:

(c) *Expiration date.* The provisions of this order shall expire at 11:59 p.m., July 15, 1979, unless otherwise modified, changed or suspended by order of this Commission.

*Effective date.* This amendment shall become effective at 11:59 p.m., January 15, 1979.

(49 U.S.C. (10304-10305 and 11121-11126).)

This amendment shall be served upon the Association of American Railroads, Car Service Division, as agent of all railroads subscribing to the car service and car hire agreement under the terms of that agreement, and upon the American Short Line Railroad Association. Notice of this amendment shall be given to the general public by depositing a copy in the Office of the Secretary of the Commission at Washington, D.C., and by filing a copy with the Director, Office of the Federal Register.

By the Commission, Railroad Service Board, members Joel E. Burns, Robert S. Turkington and John R. Michael.

H. G. HOMME, Jr.,
*Secretary.*

[FR Doc 79-1825 Filed 1-17-79; 8:45 am]

---

[7035-01-M]

[Amdt. No. 3 to Service Order No. 1275]

## PART 1033—CAR SERVICE

### ERIE WESTERN RAILWAY COMPANY AUTHORIZED TO OPERATE OVER TRACKS ABANDONED BY CONSOLIDATED RAIL CORPORATION

AGENCY: Interstate Commerce Commission.

ACTION: Emergency Order. Amendment No. 3 to Service Order No. 1275.

SUMMARY: Service Order No. 1275 authorizes Erie Western Railway Company (EW) to operate over the former

Erie Lackawanna (EL) line between Hammond and Decatur, Indiana, via North Judson, Indiana. Operation by the EW over these tracks of the former EL is necessary to provide rail service to shippers located adjacent to the line. Amendment No. 3 extends the order until July 15, 1979. Service Order No. 1275 is published in full in Volume 42 of the FEDERAL REGISTER at page 48882.

DATES: Effective 11:59 p.m., January 15, 1979. Expires 11:59 p.m., July 15, 1979.

FOR FURTHER INFORMATION CONTACT:

Charles C. Robinson, Chief, Section of Rail and Pipeline Operations, Utilization and Distribution Branch, Interstate Commerce Commission, Washington, D.C., 20423, Telephone (202) 275-7840, Telex 89-2742.

Decided January 10, 1979.

Upon further consideration of Service Order No. 1275 (42 FR 48882, 43 FR 2395 and 31014), and good cause appearing therefor:

*It is ordered,* that § *1033.1275 The Erie Western Railway Company authorized to operate over tracks abandoned by Consolidated Rail Corporation,* Service Order No. 1275 is amended by substituting the following paragraph (f) for paragraph (f) thereof:

(f) *Expiration date.* The provisions of this order shall expire at 11:59 p.m., July 15, 1979, unless otherwise modified, changed or suspended by order of this Commission.

*Effective date.* This amendment shall become effective at 11:59 p.m., January 15, 1979.

(49 U.S.C. (10304-10305 and 11121-11126).)

A copy of this amendment shall be served upon the Association of American Railroads, Car Service Division, as agent of all railroads subscribing to the car service and car hire agreement under the terms of that agreement, and upon the American Short Line Railroad Association. Notice of this amendment shall be given to the general public by depositing a copy in the Office of the Secretary of the Commission at Washington, D.C., and by filing a copy with the Director, Office of the Federal Register.

By the Commission, Railroad Service Board, members Joel E. Burns, Robert S. Turkington and John R. Michael. Member John R. Michael not participating.

H. G. HOMME, Jr.,
*Secretary.*

[FR Doc. 79-1826 Filed 1-17-79; 8:45 am]

---

[7035-01-M]

[Amdt No. 2 to Service Order No. 1333]

## PART 1033—CAR SERVICE

### ILLINOIS TERMINAL RAILROAD CO. AUTHORIZED TO OPERATE OVER TRACKS OF ILLINOIS CENTRAL GULF RAILROAD CO.

AGENCY: Interstate Commerce Commission.

ACTION: Emergency Order, Amendment No. 2 to Service Order No. 1333.

SUMMARY: The Illinois Terminal Railroad Company is unable to operate over its line between Lincoln, Illinois, and Allentown, Illinois, because of damage to a bridge at Mackinaw, Illinois. Service Order No. 1333 authorizes the Illinois Terminal to operate over parallel trackage of the Illinois Central Gulf Railroad Company between Lincoln and Pekin, Illinois, in order to provide continued rail service for shipments routed via its line. The order is published in full in Volume 43 of the FEDERAL REGISTER at page 35317. Amendment No. 2 to Service Order No. 1333 extends the order for two months.

DATES: Effective 11:59 p.m., January 15, 1979. Expires 11:59 p.m., March 15, 1979.

FOR FURTHER INFORMATION CONTACT:

Charles C. Robinson, Chief, Section of Rail and Pipeline Operations, Utilization and Distribution Branch, Interstate Commerce Commission, Washington, D.C., 20423, Telephone (202) 275-7840, Telex 89-2742.

Decided January 10, 1979.

Upon further consideration of Service Order No. 1333 (43 F.R. 35317 and 56902), and good cause appearing therefor:

*It is ordered,* that § *1033.1333 Illinois Terminal Railroad Company Authorized To Operate Over Tracks of Illinois Central Gulf Railroad Company,* Service Order No. 1333 is amended by substituting the following paragraph (e) for paragraph (e) thereof:

(e) *Expiration date.* The provisions of this order shall expire at 11:59 p.m., March 15, 1979, unless otherwise modified, changed or suspended by order of this Commission.

*Effective date.* This amendment shall become effective at 11:59 p.m., January 15, 1979.

(49 U.S.C. (10304-10305 and 11121-11126.)

This amendment shall be served upon the Association of American Railroads, Car Service Division, as agent of all railroads subscribing to the car service and car hire agreement under the terms of that agreement, and upon the American Short Line Railroad Association. Notice of this amendment shall be given to the general public by depositing a copy in the Office of the Secretary of the Commission, at Washington, D.C., and by filing a copy with the Director, Office of the Federal Register.

By the Commission, Railroad Service Board, members Joel E. Burns, Robert S. Turkington and John R. Michael.

H. G. HOMME, Jr.,
*Secretary.*

[FR Doc. 79-1827 Filed 1-17-79; 8:45 am]

---

[7035-01-M]

[Amdt. No. 1 to Service Order No. 1340]

## PART 1033—CAR SERVICE

### REGULATIONS FOR THE USE OF LOCOMOTIVES

### Atlanta and West Point Rail Road Co., Clinchfield Railroad Co., Georgia Railroad, Seaboard Coast Line Railroad Co. and Western Railway of Alabama to Deliver Locomotives to Louisville and Nashville Railroad Co.

AGENCY: Interstate Commerce Commission.

ACTION: Emergency Order, Amendment No. 1 to Service Order No. 1340.

SUMMARY: Service Order No. 1340 requires the Seaboard Coast Line Railroad and other members of the Family Lines system to furnish 100 additional locomotives to the Louisville and Nashville Railroad. The order is printed in full in Volume 43 of the FEDERAL REGISTER at page 44536. Amendment No. 1 extends the order until January 31, 1979.

DATES: Effective 11:59 p.m., January 15, 1979. Expires 11:59 p.m., January 31, 1979.

FOR FURTHER INFORMATION CONTACT:

Charles C. Robinson, Chief, Section of Rail and Pipeline Operations, Utilization and Distribution Branch, Interstate Commerce Commission, Washington, D.C., 20423, Telephone (202) 275-7840, Telex 89-2742.

Service date January 15, 1979. Decided January 12, 1979.

Upon further consideration of Service Order No. 1340 (43 FR 44536), and good cause appearing therefor:

As invited, in our order served December 27, 1978, several parties interested in the service order have filed comments relating to the extension, modification, or expiration of the serv-

ice order. The Commission believes that a short extension should be ordered to preserve the status quo while these comments and suggestions are considered.

*It is ordered,* that § *1033.1340 Atlanta and West Point Rail Road Company, Clinchfield Railroad Company, Georgia Railroad, Seaboard Coast Line Railroad Company and Western Railway of Alabama to Deliver Locomotives to Louisville and Nashville Railroad Company,* Service Order No. 1340 is amended by substituting the following paragraph (j) for paragraph (j) thereof:

(j) *Expiration date.* The provisions of this order shall expire at 11:59 p.m., January 31, 1979, unless otherwise modified, changed or suspended by order of this Commission.

*Effective date.* This amendment shall become effective at 11:59 p.m., January 15, 1979.

(49 U.S.C. (10304-10305 and 11121-11126).)

This amendment shall be served upon the Association of American Railroads, Car Service Division, as agent of all railroads subscribing to the car service and car hire agreement under the terms of that agreement, and upon the American Short Line Railroad Association. Notice of this amendment shall be given to the general public by depositing a copy in the Office of the Secretary of the Commission, at Washington, D.C., and by filing with the Director, Office of the Federal Register.

By the Commission, Chairman O'Neal, Vice Chairman Brown, and Commissioners Stafford, Gresham, Clapp and Christian.

H. G. HOMME, Jr.,
*Secretary.*

[FR Doc. 79-1828 Filed 1-17-79; 8:45 am]

---

[7035-01-M]

[Amdt. No. 1 to Second Revised Service Order No. 1308]

## PART 1033—CAR SERVICE

## DISTRIBUTION OF COVERED HOPPER CARS

AGENCY: Interstate Commerce Commission.

ACTION: Emergency Order, Amendment No. 1 to Second Revised Service Order No. 1308.

SUMMARY: The Union Pacific Railroad Company and the Illinois Central Gulf Railroad Company are unable to furnish individual shippers with jumbo covered hopper cars for consecutive shipments of grain as required by the applicable tariffs. Second Revised Service Order No. 1308 waives the consecutive-trip provisions of the applicable tariffs, enabling these railroads to make a more equitable distribution of its supply of covered hopper cars among all potential users of these cars. Second Revised Service Order No. 1308 is printed in full in Volume 43 of the FEDERAL REGISTER at page 47730. Amendment No. 1 extends the order for three months.

DATES: Effective 11:59 p.m, January 15, 1979. Expires: 11:59 p.m., April 15, 1979.

FOR FURTHER INFORMATION CONTACT:

Charles C. Robinson; Chief, Utilization and Distribution Branch, Interstate Commerce Commission, Washington, D.C., 20423, Telephone (202) 275-7840, Telex 89-2742.

Decided: January 10, 1979.

Upon further consideration of Second Revised Service Order No. 1308 (43 FR 47730), and good cause appearing therefor:

*It is ordered,* that § *1033.1308 Distribution of covered hopper cars,* Second Revised Service Order No. 1308 is amended by substituting the following paragraph (e) for paragraph (e) thereof:

(e) *Expiration date.* The provisions of this order shall expire at 11:59 p.m., April 15, 1979, unless otherwise modified, changed or suspended by order of this Commission.

*Effective date.* This amendment shall become effective at 11:59 p.m., January 15, 1979.

(49 U.S.C. (10304-10305 and 11121-11126).)

This amendment shall be served upon the Association of American Railroads, Car Service Division, as agent of all railroads subscribing to the car service and car hire agreement under the terms of that agreement, and upon the American Short Line Railroad Association. Notice of this amendment shall be given to the general public by depositing a copy in the Office of the Secretary of the Commission at Washington, D.C., and by filing a copy with the Director, Office of the Federal Register.

By the Commission, Railroad Service Board, members Joel E. Burns, Robert S. Turkington and John R. Michael.

H. G. HOMME, Jr.,
*Secretary.*

[FR Doc. 79-1829 Filed 1-17-79; 8:45 am]

# proposed rules

This section of the FEDERAL REGISTER contains notices to the public of the proposed issuance of rules and regulations. The purpose of these notices is to give interested persons an opportunity to participate in the rule making prior to the adoption of the final rules.

[3410-03-M]

## DEPARTMENT OF AGRICULTURE

Science and Education Administration [1]

[9 CFR Parts 445 and 447]

### NATIONAL POULTRY IMPROVEMENT PLAN AND AUXILIARY PROVISIONS

Extension of Comment Period

AGENCY: Science and Education Administration, USDA.

ACTION: Notice to Extend Period to Receive Comments on Proposed Rule.

SUMMARY: The purpose of this notice is to extend the period during which the Department will receive comments on the Proposed Rules pertaining to amendments to the National Poultry Improvement Plan which were published in the FEDERAL REGISTER on December 1, 1978 (43 FR 56245).

DATE: Comments will be received through February 2, 1979.

ADDRESS: Send comments to Dr. Lewis W Smith, Animal Physiology and Genetics Institute, Building 173, BARC-East, Beltsville, Maryland 20705. All written submissions made pursuant to this notice will be made available for public inspection at the above office during regular business hours.

FOR FURTHER INFORMATION CONTACT:

Raymond D. Schar at 301/344-2227.

SUPPLEMENTARY INFORMATION: This extension of time during which the Department will receive comments on proposed amendments to the National Poultry Improvement Plan is being made available in order to permit interested organizations and individuals to meet, study the proposals, and submit comments.

Done at Washington, D.C., this 15th day of January, 1979.

ANSON R. BERTRAND,
*Director, Science and Education.*

[FR Doc. 79-1875 Filed 1-17-79; 8:45 am]

[1] 9 CFR Chapter IV is currently designated Agricultural Research Service. A document in a future FEDERAL REGISTER will redesignate this chapter Science and Education Administration.

[7590-01-M]

## NUCLEAR REGULATORY COMMISSION

[10 CFR Part 50]

### DOMESTIC LICENSING OF PRODUCTION AND UTILIZATION FACILITIES

Codes and Standards for Nuclear Powerplants

AGENCY: U.S. Nuclear Regulatory Commission.

ACTION: Proposed rule.

SUMMARY: The Nuclear Regulatory Commission is considering amending its regulation, "Codes and Standards," to incorporate by reference with modifications a new edition and addenda of the national code that specifies the requirements for the inservice inspection of nuclear power plant components. Adoption of this amendment would provide the use of improved, updated methods for inservice inspection for use in nuclear power plants.

DATES: Comment period expires March 5, 1979.

ADDRESSES: Written Comments should be submitted to the Secretary of the Commission, U.S. Nuclear Regulatory Commission, Washington, D.C. 20555, Attention: Docketing and Service Branch.

FOR FURTHER INFORMATION CONTACT:

Mr. A. Taboada, Office of Standards Development, U.S. Nuclear Regulatory Commission, Washington, D.C. 20555 (phone 301-443-5999).

SUPPLEMENTARY INFORMATION: On April 24, 1978, the Nuclear Regulatory Commission published in the FEDERAL REGISTER (43 FR 17337) an amendment to its regulations, 10 CFR Part 50, "Licensing of Production and Utilization Facilities," which incorporated by reference new addenda to a specific national code. The Commission amended § 50.55a to incorporate by reference the 1977 Edition and the Summer 1977 Addenda to Section III, Division 1, "Rules for the Construction of Nuclear Power Plant Components," of the ASME Boiler and Pressure Vessel Code. However, that amendment did not incorporate by reference addenda to Section XI, "Inservice Inspection of Nuclear Power Plant Components," of the ASME Code issued after the Summer 1975 Addenda. These addenda, which contained substantial changes to the existing inservice inspection requirements previously incorporated by reference into the regulations, were still being evaluated when the amendment was published. The statement of considerations to the April 24, 1978 amendment stated that the later addenda to Section XI of the ASME Code were expected to be referenced with modifications in a subsequent amendment to the regulations.

A review of the 1977 Edition of Section XI and addenda issued from Winter 1975 Addenda through the Winter 1977 Addenda has disclosed several major changes to the code which, if adopted, would significantly reduce the examination requirements of inservice inspection programs presently required by the Commission for the reactor coolant pressure boundary and for systems required for safe shutdown of the reactor. This edition and addenda would be acceptable for incorporation by reference into the regulations only with appropriate modifications to retain those requirements considered necessary for an acceptable inservice inspection program.

In this regard, the Summer 1978 Addenda provide such modifications to Section XI of the ASME Code. The examination requirements removed from the code by previous addenda, but still required by the regulations, have either been restored or have been superseded by provisions considered to be improvements.

In light of the changes made in the Summer 1978 Addenda, the Commission now proposes to amend § 50.55a to incorporate by reference the 1977 Edition of Section XI of the ASME Code and Addenda through the Summer 1978 Addenda. Certain limitations and modifications to Section XI of the Code would also be included in the amendment to address the applicability of specific editions and addenda and to provide for flexibility and consistency in the implementation of the Code. The limitations and modifications include the following:

1. The applicability of certain code addenda would be qualified to assure that appropriate inservice examination requirements are included in inservice inspection programs for nuclear facilities. The proposed amendment would, in effect, require the application of the Summer 1978 Addenda to those inservice inspection programs that would otherwise apply additions

and addenda of Section XI from the Winter 1975 Addenda through the Winter 1977 Addenda.

2. Alternatives would be provided to the requirements for inservice inspection of pipe welds. Operating facilities and facilities in the construction stages with inservice inspection programs (facilities with applications for construction permits docketed prior to July 1, 1978) would be permitted the option of examining code Class 1 and Code Class 2 pipe welds to either the Summer 1975 Addenda or the summer 1978 Addenda or later. This addenda is the latest code addenda incorporated by reference in § 50.55a. By applying this option, such facilities would have continuity in the extent and frequency of examinations for pipe welds. the amendment also would specify the use of the Summer 1975 Addenda for establishing examination requirements for pipe welds in the Residual Heat Removal System, the Emergency core Cooling System, and the Containment Heat Removal System. This provision is needed since new code requirements for inservice examination of these systems are still under development for later addenda.

3. Provisions added to article IWB-2000 of Section XI of the ASME Code by the winter 1975 Addenda contained, for the first time, requirements for inservice inspection of steam generator tubing. However, it has been the practice of the commission to include detailed provisions for the inservice inspection of steam generator tubing in the technical specifications for a specific reactor. the potential for conflicting requirements would exist if code requirements were incorporated by reference into the regulations without appropriate modifications. Since the provisions in the technical specifications approved by the Commission are, in general, more complete and more current, the proposed amendment would require that the inservice inspection program for steam generator tubing be governed by the requirements in the technical specifications.

In addition to incorporating by reference the new edition and addenda with modifications, the Commission proposes several minor and clarifying amendments to § 50.55a. These include a change in the time interval for revising programs for inservice examination of components and for testing pumps and valves to make it consistent with the inservice inspection interval in Section XI of the ASME Code. The interval for revising inservice inspection programs for operating plants would be extended from 40 and 20 months to 120 months. Such a change would make the regulation more practical to implement and save time and effort for both the NRC and the licensee. Extending the period for revising the program is not considered a significant relaxation of safety requirements since new code changes generally deal with practical considerations or the application of new developments. In this regard the Commission may impose new code requirements at any time if safety considerations so dictate.

Pursuant to the Atomic Energy Act of 1954, as amended, the Energy Reorganization Act of 1974, as amended, and section 553 of title 5 of the United States Code, notice is hereby given that adoption of the following amendments to 10 CFR Part 50 is contemplated. All interested persons who wish to submit written comments or suggestions in connection with the proposed amendments should send them to the Secretary of the commission, U.S. Nuclear Regulatory Commission, Washington, D.C. 20555. Attention: Docketing and Service Branch by March 5, 1979. Copies of comments received may be examined in the Commission's Public Document room at 1717 H Street, NW., Washington, D.C.

In § 50.55a of 10 CFR Part 50, paragraphs (g)(2) and (g)(3)(v) are amended by deleting the words "become effective" and substituting therefor "are incorporated by reference in paragraph (b) of this section subject to the limitations and modifications listed therein" paragraphs (b)(2) and (g)(4)(i) through (g)(4)(iv) are revised to read as follows:

**§ 50.55a Codes and standards.**

Each operating license for a boiling or pressurized water-cooled nuclear power facility shall be subject to the conditions in paragraph (g) and each construction permit for a utilization facility shall be subject to the following conditions in addition to those specified in § 50.55:

* * * * *

(b)(2) As used in this section, references[1] to Section XI of the ASME Boiler and Pressure Vessel Code refer to Section XI, Division 1 and include editions through the 1977 Edition and addenda through the Summer 1978 Addenda, except that the addenda to the 1974 Edition issued after the Summer 1975 Addenda and the 1977 Edition and subsequent addenda are subject to the following limitations and modifications: (i) *Applicability of specific editions and addenda.* When using the 1974 Edition for establishing an inservice inspection program only the addenda through the Summer 1975 Addenda may be used. When using the 1977 Edition for establishing an inservice inspection program all of the addenda through the summer 1978 addenda must also be used.

(ii) *Pressure-retaining welds in ASME Code Class 1 piping (applies to Table IWB-2500 and IWB-2500-1 Category B-J).* If the facility's application for a construction permit was docketed prior to July 1, 1978, Code Class 1 pipe welds may be examined to the requirements of Table IWB-2500 and Table IWB-2600 Category B-J of Section XI of the ASME code in the 1974 Edition and addenda through the Summer 1975 Addenda.

(iii) *Steam generator tubing (modifies Article IWB-2000).* If the technical specifications of a nuclear power plant include surveillance requirements for steam generators different than those in Article IWB-2000, the inservice inspection program for steam generator tubing shall be governed by the requirements in the technical specifications.

(iv) *Pressure-retaining welds in ASME Code Class 2 piping (applies to Tables IWC-2520 or IWC-2520-1, Category C-F)*

(A) The Code Class 2 pipe welds in Residual Heat Removal Systems, Emergency Core Cooling Systems, and Containment Heat Removal Systems, shall be examined to the requirements of paragraph IWC-1220, Table IWC-2520 Category C-F and C-G, and paragraph IWC-2411 in the Summer 1975 Addenda of Section XI of the ASME Code.

(B) For a nuclear power plant whose application for a construction permit is docketed prior to July 1, 1978, Code Class 2 pipe welds may be examined to the requirements of paragraph IWC-1220, Table IWC-2520 Category C-F and C-G and paragraph IWC-2411 in the Summer 1975 Addenda of section XI of the ASME Code.

* * * * *

(g) Inservice Inspection Requirements:

* * * * *

(4) (i) Inservice examinations of components and inservice tests of pumps and valves conducted during the intial 120-month inspection interval shall comply with the requirements in the latest edition and addenda of the code incorporated by reference in paragraph (b) of this section on the date 12 months prior to the date of issuance of the operating license, subject to the imitations and modifications listed in paragraph (b).

(ii) Inservice examinations of components and inservice tests of pumps and valves conducted during successive 120-month inspection interval shall comply with the requirements of the latest edition and addenda of the Code incorporated by reference in paragraph (b) of this section 12 months prior to the start of the 120-month inspection interval, subject to the limita-

tions and modifications listed in paragraph (b).

(iii) For a facility whose operating license was issued prior to March 1, 1976, the provisions of paragraph (g)(4) of this section are effective after September 1, 1976, at the start of the next one-third of a 120-month inspection interval. During that third of an inspection interval and the remainder of the inspection interval, the inservice inspections of components and tests of pumps and valves for such facilities shall comply with the requirements in the latest edition and addenda of the Code incorporated by reference in paragraph (b) of this section on the date 12 months prior to the start of that third of an inspection interval, subject to the limitations and modifications listed in paragraph (b).

(iv) Inservice examinations of components and tests of pumps and valves may meet the requirements set forth in subsequent editions and addenda that are incorporated by reference in paragraph (b) of this section, subject to the limitations and modifications listed in paragraph (b), and subject to Commission approval. Portions of editions or addenda may be used provided that all related requirements of the respective editions or addenda are met.

* * * * *

(Secs. 103, 104, 161i, Pub. Law 83-703; 68 Stat. 936, 937, 948; Sec. 201, Pub. Law 93-438, 88 Stat. 1242; (42 U.S.C. 2133, 2134, 2201(i), 5841)).

Dated at Bethesda, Maryland this 2nd day of January 1979.

For the Nuclear Regulatory Commission.

LEE V GOSSICK,
*Executive Director for Operations.*

[FR Doc. 79-1773 Filed 1-17-79; 8:45 am]

---

[6450-01-M]

## DEPARTMENT OF ENERGY

### Economic Regulatory Administration

[10 CFR Parts 500, 501, 502, 503, and 505]

[Docket No. ERA-R-78-19]

### HEARINGS ON PROPOSED RULES TO IMPLEMENT THE POWERPLANT AND INDUSTRIAL FUEL USE ACT OF 1978

AGENCY: Economic Regulatory Administration, Department of Energy.

ACTION: Notice of Public Hearings on New Facilities; Extension of the Public Comment Period.

SUMMARY: The Economic Regulatory Administration (ERA) of the Department of Energy (DOE) hereby announces a series of public hearings on its proposed rules for implementation of the Powerplant and Industrial Fuel Use Act of 1978 (FUA), Public Law 95-620, and extension of the public comment period. Proposed rules concerning new facilities were published on November 17, 1978 (43 FR 53974). Proposed rules concerning existing facilities will be published in the near future. Notice of public hearings on the Draft Environmental Impact Statement concerning implementation of FUA was published in the January 9, 1979 FEDERAL REGISTER (44 FR 2004).

DATES: Public hearings will be held on February 7, 1979, and if required, on February 8, 1979, in Boston, Massachusetts; February 14, 1979, and if required, February 15, 1979 in Salt Lake City, Utah; February 21, 1979, and if required, February 22, 1979 in Tampa, Florida; and March 1, 1979, and if required, March 2, 1979 in Lexington, Kentucky. All hearings will begin at 9:30 a.m. Written comments on new facilities are now due by March 2, 1979, 4:30 p.m. Requests to speak for the Boston, Salt Lake City, and Tampa hearings by January 26, 1979, 4:30 p.m. Requests to speak for the Lexington hearing by February 15, 1979, 4:30 p.m.

ADDRESSES: Send all written comments to: Department of Energy, Public Hearing Management, Room 2313, 2000 M Street, NW., Washington, D.C. 20461, Docket No. ERA-78-R-19. Where possible, comments on separate issues should be clearly identified to allow efficient review and consideration.

| City | Hearing date | Location | Requests to speak |
|---|---|---|---|
| Boston, Mass | Feb. 7 | Shawmut Bank Bldg., Conf. Rm. 8th Fl., 1 Federal Street, Boston, Mass. | Dept. of Energy, 150 Causeway Street, Room 700, Boston, Mass., (617) 223-5257. |
| Salt Lake City, Utah | Feb. 14 | Salt Palace, 100 S.W. Temple, Room 123, Salt Lake City, Utah. | Dept. of Energy, 1075 S. Yukon Street, P.O. Box 26247, Belmar Branch, Lakewood, Colo., (303) 234-2420. |
| Tampa, Fla | Feb. 21 | Sheraton Tampa Motor Hotel, Ballroom, 500 E. Cass Street, Tampa, Fla. | Dept. of Energy, 1655 Peachtree, St. NE, Atlanta, Ga., (404) 257-2051. |
| Lexington, Ky | Mar. 1 | Hyatt Regency, Washington Room, 400 W. Pine Street, Lexington, Ky. | Dept. of Energy, 1655 Peachtree, St. NE, Atlanta, Ga., (404) 257-2051. |

FOR FURTHER INFORMATION CONTACT:

William L. Webb (Office of Public Information), Economic Regulatory Administration, Department of Energy, Room B-110, 2000 M Street, N.W., Washington, D.C. 20461, (202) 634-2170.

John L. Gurney (Regulations and Emergency Planning), Economic Regulatory Administration, Department of Energy, Room 2130, 2000 M Street, N.W., Washington, D.C. 20461, (202) 632-6690.

Barton R. House (Fuels Regulation Program Office), Economic Regulatory Administration, Department of Energy, Room 6128-I, 2000 M Street, N.W., Washington, D.C. 20461, (202) 254-3905.

James H. Heffernan (Office of General Counsel), Department of Energy, Room 6144, 12th and Pennsylvania Avenue, N.W., Washington, D.C. 20461, (202) 633-9296.

SUPPLEMENTARY INFORMATION: On November 9, 1978, ERA issued proposed rules for implementation of FUA pertaining to new facilities (November 17, 1978, 43 FR 53974).

FUA prohibits the use of petroleum and natural gas by certain new electric powerplants and industrial major fuel burning installations. The proposed rules establish procedures and criteria by which users may petition for exemptions from the prohibitions of the Act. The rules also establish a requirement for a Fuels Decision Report which must be submitted as part of any petition for exemption.

Interested persons who would like to participate in any hearing should contact the appropriate Regional Ofice of DOE as listed above in the "ADDRESSES" section of this Notice. A request to participate in any hearing shall be in writing and signed by the person making the request. Please provide a phone number where we may contact you through the day before the hearing.

Participants should bring 50 copies of their testimony and each exhibit to be presented to ERA with them on the day of the hearing. The hearings will be conducted in accordance with the procedures set forth in the November 17, 1978 Proposed Rules.

We will notify each person selected to be heard before 4:30 p.m., January 30, 1979 for the Boston, Salt Lake City and Tampa hearings, and February 20, 1979 for the Lexington hearing.

(Department of Energy Organization Act, Pub. L. 95-91; Powerplant and Industrial Fuel Use Act, Pub. L. 95-620.)

Issued in Washington, D.C. January 12, 1979.

DAVID J. BARDIN,
*Administrator, Economic Regulatory Administration.*

[FR Doc. 79-1872 Filed 1-17-79; 8:45 am]

[7535-01-M]

## NATIONAL CREDIT UNION ADMINISTRATION

[12 CFR Part 701]

### ORGANIZATION AND OPERATIONS OF FEDERAL CREDIT UNIONS

Nondiscrimination Requirements in Lending

AGENCY: National Credit Union Administration.

ACTION: Proposed rule.

SUMMARY: The National Credit Union Administration proposes to amend its nondiscrimination in lending regulation. The amendments, which are in accordance with the Fair Housing Act of 1968, would: (a) Prohibit a Federal credit union from denying a real estate related loan (or offering it on less favorable terms and conditions) based on the age or location of the dwelling, or based upon the race, color, sex, or national origin of the borrower or of the people who reside (or may reside) in the vicinity of the dwelling securing the loan; (b) Make the real estate appraisal available to any requesting member/applicant; and (c) Enable a member who feels he/she has been discriminated against to contact the National Credit Union Administration.

DATE: Comments must be received on or before February 28, 1979.

SEND COMMENTS TO: Robert S. Monheit, Senior Attorney, Office of General Counsel, National Credit Union Administration, 2025 M Street, NW Washington, DC 20456.

FOR FURTHER INFORMATION CONTACT:

Edward J. Dobranski, Senior Attorney, Office of the General Counsel, at the above address. Telephone: (202) 632-4870.

SUPPLEMENTARY INFORMATION: The National Credit Union Administration proposes to broaden its nondiscrimination regulation (§ 701.31) to specifically address certain practices, such as racial redlining, which violate the Fair Housing Act of 1968 (42 U.S.C. 3601, *et seq.*). Given Federal credit union entry into the long term mortgage market, the National Credit Union Administration believes the changes are necessary to assist Federal credit unions in distinguishing legitimate reasons for denying a loan from those that are prohibited by the Fair Housing Act. Also, it is hoped that the regulation will impress upon Federal credit unions the necessity of assisting in the revitalization of urban neighborhoods.

The proscriptions contained in the proposals are based upon the Fair Housing Act and the interpretations given that statute by the Federal courts. *See*, e.g., *Laufman* v. *Oakley Bldg. & Loan Co.*, 408 F Supp. 489 (D. Ohio 1976). Other applicable statutes and regulations protecting a credit applicant from prohibited discrimination, such as the Equal Credit Opportunity Act, are neither incorporated nor supplanted by the proposed regulation.

#### SCOPE

The proposed regulation applies to those loans secured by a first lien made for the purpose of financing (or refinancing) the acquisition of a 1-4 family dwelling and also applies to home improvement loans. Both types of loans are referred to in the regulation as 'real estate related' loans.

#### NONDISCRIMINATION IN LENDING

This section encompasses both denying a loan and offering a loan on less favorable terms and conditions. It prohibits consideration of the racial, ethnic, or religious affiliation of both the borrower *and* of the people who live (or are expected to live) in the neighborhood where the dwelling is located. Considering such factors is a clear violation of the Fair Housing Act of 1968.

This section also prohibits reliance upon two other factors (*i.e.*, age and location of dwelling) neither of which relates to the creditworthiness of the borrower, and both of which often have a discriminatory effect, irrespective of whether a discriminatory intent is present. (Use of such factors in the appraisal, as opposed to underwriting of the loan, is discussed below).

#### ADVERTISING

Section 701.31 has been amended to require that the Fair Housing logotype and legend state that the applicant/borrower may file a complaint with the National Credit Union Administration, as well as with HUD. It has also been amended to require an Equal Credit Opportunity Act legend stating that the applicant/borrower may file an ECOA complaint with the Administration.

#### APPRAISAL

This section prohibits the use of an appraisal which was made in violation of the Fair Housing Act (either *per se* or *in effect*). This includes reliance on an appraisal which, based on the age or location of the dwelling, undervalues the appraised dwelling. (Since the appraiser is an agent of the Federal credit union in this respect, any of his/her discriminatory actions are imputed to the Federal credit union, irrespective of the Federal credit union's actual knowledge of them). It should be noted that prohibition relating to age does not prevent consideration of the structual soundness of a dwelling. The prohibition extends only to underappraisal due to the age of a dwelling without regard to its structural soundness.

With respect to the prohibition against consideration of the dwelling's location, the Administration recognizes that certain factors relating to location can be validly considered in the appraisal process. For example, the fact that the dwelling is located atop an abandoned mine shaft or land fault. It is the Administration's position, however, that the burden of justifying an exception to the consideration of location prohibition be placed upon the Federal credit union and its agent appraiser, and documented accordingly. This approach has been proposed for two reasons. First, the Administration cannot possibly list a litany of every location factor causing a lower appraisal which can be validly considered. Second, consideration of certain location factors (such as zoning changes and abandoned homes in the neighborhood) can be proper in some instances and improper in others. The Administration believes this approach best implements its position that arbitrary decisions based on location are prohibited.

This section also enables the member to obtain a copy of the appraisal on request.

#### MONITORING

The National Credit Union Administration believes that the application and loan information a Federal credit union maintains pursuant to Regulation B (race, sex, age, and marital status), Regulation C (census tract), FHLMC loan application Form 65/FNMA Form 1003 (year property built) and National Credit Union Administration Regulation 701.21-6 (application, sales contract, appraisal, settlement statement, note and security instrument) are sufficient to enable to National Credit Union Administration to determine, upon examination, whether redlining or other discriminatory practices have taken place. In short, the National Credit Union Administration can assume the full responsibility for collecting and analyzing the data needed for determining compliance.

Consequently the National Credit Union Administration will not require a Federal credit union to maintain a separate loan application register for residential real estate loans and no additional burden will be placed upon Federal credit unions. The agency believes this approach is consistent with the President's anti-inflation policies.

Accordingly, the National Credit Union Administration proposes to delete existing § 701.31 and proposes new § 701.31 to read as follows:

LAWRENCE CONNELL,
*Administrator.*

JANUARY 12, 1979.

(Sec. 120, 73 Stat. 635 (12 U.S.C. 1766) and Sec. 209, 84 Stat. 1104 (12 U.S.C. 1789). (42 U.S.C. 3601-3619; 42 U.S.C. 1981, 15 U.S.C. 1601 et seq.; 12 U.S.C. 1757, 1759, 1786 and 1789)

**§ 701.31 Nondiscrimination requirements.**

(a) *Definitions.* As used in this part, the term,

(1) 'Application' carries the meaning of that term as defined in 12 CFR 202.2(f) (Regulation B); and

(2) 'Real estate related loan', means any loan (or application therefor) made pursuant to Section 107(5)(A)(i) of the Federal Credit Union Act and any loan (or application therefor) made pursuant to Section 107(5)(A)(ii) of the Federal Credit Union Act for the purpose of repair, alteration, or improvement of the applicant's residential dwelling.

(b) *Nondiscrimination in Lending.* (1) A Federal credit union may not deny a real estate related loan on the basis of age or location of the dwelling.

(2) A Federal credit union may not discriminate in setting the terms and conditions of a real estate related loan on the basis of the age or location of the dwelling.

(3) A Federal credit union may not deny a real estate related loan, nor may it discriminate in setting the terms and conditions of such loan on the basis of the race, color, religion, sex, or national origin of:

(i) Any applicant or joint applicant;

(ii) Any person associated with an applicant or joint applicant in connection with a real estate related loan application;

(iii) The present or prospective owners, lessees, tenants, or occupants of the dwelling for which a real estate related loan is requested to be made;

(iv) The present or prospective owners, lessees, tenants, or occupants of other dwellings in the vicinity of the dwelling for which a real estate related loan is requested to be made.

(c) *Nondiscrimination in Appraisals.* (1) A Federal credit union may not rely upon an appraisal of a dwelling if the appraisal is discriminatory on the basis of the age or location of the dwelling, or is discriminatory either *per se* or *in effect*, on a basis prohibited by the Fair Housing Act of 1968.

(2) Notwithstanding paragraph (c)(1) of this section it is recognized that there may be factors concerning location of the dwelling which can be properly considered in an appraisal. If any such factors are relied upon, such reliance must be justified as not in violation of the Fair Housing Act of 1968, and documented accordingly.

(3) Each Federal Credit union shall make available, to any requesting member/applicant, a copy of the appraisal used in connection with that member's real estate related loan application.

(d) *Nondiscrimination in Advertising*—(1) *Advertising notice of nondiscrimination compliance.* No Federal credit union may directly or indirectly engage in any form of advertising of real estate related loans which implies or suggests a discriminatory preference or policy of exclusion in violation of the provisions of the Fair Housing Act of 1968 or of this Part. Advertisements relating to such loans shall include a facsimile of the logotype and legend appearing in paragraph (d)(3) of this section.

(2) *Lobby notice of nondiscrimination compliance.* Every Federal credit union which engages in real estate related lending shall conspicuously display in the public lobby of such credit union and in the public area of each office where such loans are made, in a manner so as to be clearly visible to the general public entering such lobby or area, a notice that incorporates a facsimile of the logotype and legend appearing in paragraph (d)(3) of this section. Posters containing this legend and logotype may be obtained from the regional offices of the National Credit Union Administration.

(3) *Logotype and notice of nondiscrimination compliance.* The logotype and text of the notice required in paragraphs (d) (1) and (2) of this section shall be as follows:

EQUAL HOUSING
LENDER

**We Do Business in Accordance With the Federal Fair Housing Law**

(Title VIII of the Civil Rights Act of 1968, as Amended by the Housing and Community Development Act of 1974)

IT IS ILLEGAL TO DISCRIMINATE AGAINST ANY PERSON BECAUSE OF RACE, COLOR, RELIGION, SEX, OR NATIONAL ORIGIN, TO:

- Deny a loan for the purpose of purchasing, constructing, improving, repairing or maintaining a dwelling or
- Discriminate in fixing of the amount, interest rate, duration, application procedures or other terms or conditions of such a loan

IF YOU BELIEVE YOU HAVE BEEN DISCRIMINATED AGAINST, YOU MAY SEND A COMPLAINT TO:

NATIONAL CREDIT UNION ADMINISTRATION, Division of Consumer Affairs, Washington, D.C. 20456

U.S. DEPARTMENT OF HOUSING AND URBAN DEVELOPMENT, Assistant Secretary for Fair Housing and Equal Opportunity, Washington, D.C. 20410

or call your local HUD Area or Insuring Office.

IT IS ILLEGAL UNDER THE EQUAL CREDIT OPPORTUNITY ACT TO DISCRIMINATE IN EXTENDING CREDIT:

- ☐ On the basis of race, color, religion, national origin, sex, or marital status, or age
- ☐ Because income is from public assistance
- ☐ Because a right was exercised under the Consumer Credit Protection Act.

IF YOU BELIEVE YOU HAVE BEEN DISCRIMINATED AGAINST, YOU MAY SEND A COMPLAINT TO:

NATIONAL CREDIT UNION ADMINISTRATION, DIVISION OF CONSUMER AFFAIRS, WASHINGTON, D.C. 20456

[FR Doc. 79-1870 Filed 1-17-79; 8:45 am]

---

[4910-13-M]

## DEPARTMENT OF TRANSPORTATION

**Federal Aviation Administration**

**[14 CFR Part 71]**

[Airspace Docket No. 78-SO-81]

## DESIGNATION OF FEDERAL AIRWAYS, AREA LOW ROUTES, CONTROLLED AIRSPACE, AND REPORTING POINTS

**Proposed Alteration of Control Zone, Anderson, S.C.**

AGENCY: Federal Aviation Administration (FAA), DOT.

ACTION: Notice of Proposed Rulemaking.

SUMMARY: This notice proposes to alter the Anderson, South Carolina, control zone and lower the base of controlled airspace in the vicinity of the Anderson County Airport from 700 feet AGL to the surface to accommodate Instrument Flight Rule (IFR) operations. A new public use instrument approach procedure has been developed for the Anderson County Airport, and the additional controlled airspace is required to protect aircraft executing the approach procedure.

DATES: Comments must be received on or before: February 28, 1979.

ADDRESS: Send comments on the proposal to: Federal Aviation Administration, Chief, Air Traffic Division, P.O. Box 20636, Atlanta, Georgia 30320.

FOR FURTHER INFORMATION CONTACT:

Harlen D. Phillips, Airspace and Pro-

cedures Branch, Federal Aviation Administration, P.O. Box 20636, Atlanta, Georiga 30320; telephone: 404-763-7646.

SUPPLEMENTARY INFORMATION:

COMMENTS INVITED

Interested persons may participate in the proposed rulemaking by submitting such written data, views or arguments as they may desire. Communications should identify the airspace docket number and be submitted in triplicate to the Director, Southern Region, Federal Aviation Administration, Attention: Chief, Air Traffic Division, P.O. Box 20636, Atlanta, Georgia 30320. All communications received on or before February 28, 1979, will be considered before action is taken on the proposed amendment. The proposal contained in this notice may be changed in the light of comments received. All comments submitted will be available, both before and after the closing date for comments, in the Rules Docket for examination by interested persons. A report summarizing each public contact with FAA personnel concerned with this rulemaking will be filed in the public, regulatory docket.

AVAILABILITY OF NPRM

Any person may obtain a copy of this notice of proposed rulemaking (NPRM) by submitting a request to the Federal Aviation Administration, Office of Public Affairs, Attention: Public Information Center, APA-430, 800 Independence Avenue, S.W., Washington, D.C. 20591, or by calling (202) 426-8058. Communications must identify the notice number of this NPRM. Persons interested in being placed on a mailing list for future NPRMs should also request a copy of Advisory Circular No. 11-2 which describes the application procedures.

THE PROPOSAL

The FAA is considering an amendment to Subpart F of Part 71 of the Federal Aviation Regulations (14 CFR 71) to provide additional controlled airspace protection for IFR operations at Anderson County Airport. The NDB Runway 35 standard instrument approach procedure utilizing the Anderson County (nonfederal) nondirectional radio beacon is proposed in conjunction with the alteration of this control zone.

THE PROPOSED AMENDMENT

Accordingly, the Federal Aviation Administration proposes to amend Subpart F, § 71.171 (44 FR 353), of Part 71 of the Federal Aviation Regulations (14 CFR 71) by adding the following:

ANDERSON, S.C.

". . . and within 3 miles each side of the 171° bearing from the Anderson County RBN (latitude 34°29'53" N., longitude 82°42'31" W.), extending from the 5 mile radius zone to 8.5 miles south of the RBN . . .".

(Sec. 307(a) of the Federal Aviation Act of 1958, as amended (49 U.S.C. 1348(a)) and Sec. 6(c) of the Department of Transportation Act (49 U.S.C. 1655(c)).)

NOTE.—The Federal Aviation Administration has determined that this document involves a proposed regulation which is not considered to be significant under the procedures and criteria prescribed by Executive Order 12044 and as implemented by interim Department of Transportation guidelines (43 FR 9582; March 8, 1978).

Issued in East Point, Georgia, on January 4, 1979.

LONNIE D. PARRISH,
*Acting Director, Southern Region.*

[FR Doc. 79-1732 Filed 1-17-79; 8:45 am]

---

[6320-01-M]

## CIVIL AERONAUTICS BOARD

[14 CFR Part 399]

[Docket 30362; PSDR-54]

### STATEMENTS OF GENERAL POLICY PAYMENTS TO SHIPPERS AND INTERMEDIARIES BY DIRECT CARRIERS

JANUARY 11, 1979.

AGENCY: Civil Aeronautics Board.

ACTION: Notice of Proposed Rulemaking.

SUMMARY: This notice proposes a policy statement that since payments by direct carriers to shippers, air freight forwarders, or cooperative shippers associations for ready-for-carriage services are not directly connected with the basic sale of transportation, these payments are not barred as rebates. The rulemaking is in response to a petition from the Airfreight Forwarders Association.

DATES: Comments by March 20, 1979.

Comments and other relevant information received after these dates will be considered by the Board only to the extent practicable.

Requests to be put on the Service List by: January 29, 1979.

Docket Section prepares the Service List and sends it to each person listed, who then serves comments on others on the list.

ADDRESSES: Comments should be sent to Docket 30362, Docket Section, Civil Aeronautics Board, Washington, D.C. 20428. Docket comments may be examined at the Docket Section, Civil Aeronautics Board, Room 711, Universal Building, 1825 Connecticut Avenue N.W., Washington, D.C. as soon as they are received.

FOR FURTHER INFORMATION CONTACT:

Joseph A. Brooks, Office of the General Counsel, Civil Aeronautics Board, 1825 Connecticut Avenue, N.W., Washington, D.C. 20428, 202-673-5442.

SUPPLEMENTARY INFORMATION: In response to a petition for rulemaking from the Air Freight Forwarder Association, the Board issued Advance Notice of Proposed Rulemaking EDR-330 (42 FR 38600, July 29, 1977), asking for comment about payment of commissions or ready-for-carriage fees to shippers or intermediaries on international shipments. The Board specifically asked for information and views about: the kinds of services usually performed by freight intermediaries, such as forwarders and agents; any differences in costs that would result if a particular service were performed by someone else; the type of intermediary that should receive these payments; and the tariffs and system of fees connected with the services performed. Comments and reply comments were received from several large shippers, U.S. and foreign direct carriers, and from air freight forwarders and cargo agents.[1]

Under the Act (section 403(b)) and Board regulations (14 CFR Parts 221 and 296), the payment of commissions or fees to shippers or indirect cargo carriers has been considered a method for rebates from the direct carrier's

[1] Comments were received from: Air Express International, Air Freight Forwarder Association, Amerford International Corporation, American Airlines, British Airways, Control Date Corporation, Customs Brokers and Forwarders Association of Miami, The Flying Tiger Line (FTL), Intercontinental Forwarders, International Airfreight Agents Associations (IAAA), Japan Air Lines, Novo International Airfreight, Outboard Marine Corporation, Trans World Airlines, United Air Lines, Venezolana Internacional de Aviacion, S.A. (VIASA), W. R. Zane & Co., and 3M Company.

FTL filed a Motion for Leave to File Late with its comments, and IAAA filed a Motion for Leave to File an Otherwise Unauthorized Document with a response to FTL's comment. For good cause, the motions are granted.

tariff.- Forwarders, however, may receive a commission when acting as an agent for an individual shipment on the airwaybill of the direct carrier. Cargo agents receive a commission from the direct carrier on individual shipments. These agents do not receive a commission on consolidated shipments. The forwarder may not receive a commission for either an individual or consolidated shipment when transmitted on his airwaybill. To do so would be a rebate from the direct carrier's tariff, because of these shipments the forwarder is acting as a shipper in relation to the direct carrier. For the same reasons, the direct carriers may not pay commissions on these shipments.

Ready-for-carriage fees (payments for services rendered), however, have been prohibited not as rebates, but because they could be used as a vehicle to disguise rebating. We have tentatively decided that this prophylactic restraint on ready-for-carriage fees is no longer justified. The Airline Deregulation Act of 1978 (Pub. L. 95-504) has emphatically changed the policy of regulation of air transportation from protection to competition. Previously, in balancing the danger of rebating against freer opertion of the market, the Board found protection was necessary. In view, however, of the changes in the Act freeing price and entry, and of the more liberalized regulation of the cargo industry, not only has the danger of rebating receded, but such a prohibition would tend to stifle these competitive market forces.

The forwarders and shippers contended that direct carriers receive specific, valuable services from them at no cost. Only part of their services, they claimed, are in any way compensated by the difference between their rates and the discounts given by the direct carriers on volume shipments. They argued that the prohibitions on such payments have been discriminatory in two ways. First, cargo agents performing the same services to receive payments in the form of commissions.[3] Second, since the international cargo rate structure is based on the implicit assumption that commissions are paid to forwarders, there are insufficient incentives for U.S. forwarders to develop and expand international air freight markets. Also, this situation is to the competitive advantage of foreign forwarders, allowing them the financial resources, in part because of the receipt of commissions, to penetrate U.S. markets, while denying U.S. forwarders the same resources for foreign markets.

The opponents stressed that these payments can camouflage rebates and are not economically justified. They argued that the freight rate structure of the direct carriers is designed so that the shippers or indirect air carriers performing ready-for-carriage services receive the resulting cost saving to the direct carriers. If permitted, they argued, these payments would increase the cost to the shipper to cover the additional cost to the direct carrier.

While we agree that payment of commissions to forwarders or shippers could be considered a rebate from the direct carrier's tariff to the purchaser of its air transportation, ready-for-carriage fees would appear to be payment for services which are only ancillary to the air transportation provided, and in addition would appear to provide incentives for efficiency and price competition. With the passage of the cargo deregulation amendments (Pub. L. 95-163) and the Airline Deregulation Act of 1978 (Pub. L. 95-504), the air freight industry will gradually become more responsive to price competition.

Since the forwarder or shipper can often more efficiently prepare shipments for carriage at a lower cost than the direct carrier, payment by the direct carrier of ready-for-carriage fees to the forwarder could result in the shipper receiving more efficient service at lower cost. Overall, we believe that shaper price competition between the direct air carrier and the forwarder, and price competition at the forwarder level, would create pressures to minimize the costs of shipment handling, and would force forwarders to pass along lower rates to the shipper, driving rates down and benefiting both the shipping public and the ultimate consumer of the goods.

It is also our tentative decision that if the direct carrier is paying for actual services received, there is no rebate involved in the transaction. For example, although decided on a narrow basis, and not a precedent for this case, in Order 77-4-80, dated April 15, 1977, the Board has stated that the bona fide sharing of advertising expenses by a direct carrier and a tour operator would not be a rebate. In view of the Congressionally mandated emphasis on competition as the primary regulator of air transportation, since these ready-for-carriage services appear to be only ancillary to the provision of the air transportation itself, this artificial, prophylactic restraint is no longer warranted. Payment for these services would not be a refund or remittance to the purchaser from the direct carrier's rate for air transportation, and since they are not directly connected to its sale there is no point in denying this competitive tool to the air cargo industry.

Accordingly, the Board proposes to amend Part 399 of its Policy Statements (14 CFR Part 399) to read as follows:

1. The Table of Contents would be revised by adding a new section 399.86 to Subpart G to read:

Subpart G—Policies Relating to Enforcement

* * * * *

§ 399.86 Payments to shippers and indirect cargo carriers.

2. Subpart G would be revised by adding a new section 399.86 to read:

§ 399.86 Payments to shippers and indirect cargo carriers.

The Board considers that payments by direct air carriers to shippers or indirect air cargo carriers for delivering shipments to the direct carriers in a ready-for-carriage form are for services ancillary to the provision of air transportation, and are not rebates under section 403 of the Act.

(Secs. 204, 401, 403, 404(b), of the Federal Aviation Act, as amended, 72 Stat. 743, 754, 758, and 760; 49 U.S.C. 1324, 1371, 1373, and 1374; Pub. L. 95-504).

By the Civil Aeronautics Board.

PHYLLIS T. KAYLOR,
*Secretary.*

[FR Doc. 79-1867 Filed 1-17-79; 8:45 am]

[3]By ER-1080 (43 FR 53628, November 16, 1978), the Board has exempted direct carriers in domestic cargo transportation from the requirement to file tariffs.

[3]They do not ship on their own tariffs, however, or charge their own rates. They charge the shipper the rate of the direct carrier's airwaybill.

---

[6450-01-M]

## DEPARTMENT OF ENERGY

Federal Energy Regulatory Commission

[18 CFR Part 281]

[Docket No. RM79-15]

### NATURAL GAS CURTAILMENT

Notice of Proposed Rulemaking Implementing Section 401 of the Natural Gas Policy Act of 1978

AGENCY: Federal Energy Regulatory Commission.

ACTION: Notice of proposed rulemaking.

SUMMARY: The Natural Gas Policy Act of 1978 (NGPA), in section 401, requires interstate pipeline curtailment plans, to the maximum extent practicable, to protect the requirements of essential agricultural uses. This Notice of Proposed Rulemaking contains a proposed regulation of the implementation of that section.

DATES: Written comments by February 26, 1979.

PUBLIC HEARINGS: Dates and locations to be announced. The Commis-

sion solicits suggestions as to where it would be appropriate to hold other proceedings in addition to the one to be held in Washington, D.C. Such requests should be submitted by January 25, 1979 to the address below.

ADDRESS: Office of the Secretary, Federal Energy Regulatory Commission, 825 North Capitol Street, N.E., Washington, D.C. 20426 (Reference Docket No. RM79-15).

FOR FURTHER INFORMATION CONTACT:

Romulo L. Diaz, Jr., Office of the General Counsel, Federal Energy Regulatory Commission, 825 North Capitol Street, NE., Washington, D.C. 20426 (202) 275-3771.

*or*

Martin A. Burless, Office of Pipeline and Producer Regulation, Federal Energy Regulatory Commission, 825 North Capitol Street, NE., Washington, D.C. 20426 (202) 275-4349.

## PREAMBLE TO THE PERMANENT CURTAILMENT RULE

### BACKGROUND

Section 401 of the Natural Gas Policy Act of 1978 (NGPA) seeks to assure that natural gas required for essential agricultural uses will not be curtailed unless curtailment is required to protect the needs of enumerated high priority users.

Section 401(a) provides that not later than 120 days after the date of enactment of the NGPA the Secretary of Energy shall prescribe and make effective a rule which provides that no curtailment plan of an interstate pipeline may provide for curtailment of deliveries of natural gas for any essential agricultural use except to meet the requirements of enumerated high priority users.

Section 401(c) states that the Secretary of Agriculture shall certify to the Secretary of Energy and to the Federal Energy Regulatory Commission and natural gas requirements for essential agricultural uses in order to meet the requirements of full food and fiber production.

Pursuant to section 403(b) of the NGPA and section 402(a)(1)(E) of the Department of Energy Organization Act, the Federal Energy Regulatory Commission is charged with implementing the rules prescribed under section 401 under its authority to establish, review, and enforce curtailments under the Natural Gas Act. By a separate rulemaking the Commission has proposed rules to give effect to section 401 for the period March 9, 1979, 120 days after the date of enactment, through October 31, 1979. The rules proposed herein are to be effective November 1, 1979, the beginning of the first full winter heating season when section 401 will be in effect. However, as will be discussed, public comment is solicited on when this rule should be made effective.

Title IV of the NGPA creates new priority classifications for high priority users as defined in the statute, essential agricultural uses, and essential industrial process and feedstock uses. There is no statutory deadline for implementation of a rule regarding essential industrial process and feedstock uses. The Economic Regulatory Administration of the Department of Energy is studying curtailment priorities and it is likely that a rule regarding essential industrial process and feedstock uses will be proposed by the Secretary of Energy upon its completion.

By this rulemaking the Commission proposes a method for the permanent implementation of section 401. In developing this proposed rule the Commission has had the benefit of consultation with the United States Department of Agriculture as contemplated by section 401. The Commission is aware, however, that consultation does not imply concurrence by the USDA with all aspects of these proposed regulations.

Under the proposed rule pipeline curtailment plans will be amended so that high priority end users that are not now in the highest priority of pipeline curtailment plans will be reclassified into Priority One. Pipeline curtailment plans will create a new Priority Two which will contain the requirements necessary to serve essential agriculture uses. All other pipeline curtailment categories will remain the same and their order will remain the same but they will be below these two new categories.

The proposed changes in curtailment plans are to be implemented on November 1, 1979. It will be necessary for the interstate pipelines to revise their end use profiles and curtailment plans to reflect the changes brought about by the enactment of NGPA. Thus, although the rule will not be implemented until November 1, substantial work will be required before that date to prepare for its implementation. The Commission anticipates as soon as this rule is promulgated end users, local distribution companies, and interstate pipelines will immediately commence working towards its implementation.

The Commission requests interested parties to comment on the proposed date for implementation of these changes in curtailments. It is possible that the rules promulgated under section 402 may require similar modifications to the ones proposed here. There may be benefits to postponing permanent implementation until after those rules are promulgated. However, it is unlikely that the section 402 rule will be in place for the 1979-80 heating season so that if section 401 were implemented with section 402, some interim plan would have to be adopted for the 1979-80 heating season. Comments and suggestions are requested on this issue.

The Commission recognizes that there may be interstate pipelines with existing curtailment plans that will not require modification. For example, there may be interstate pipelines that do not have any essential agricultural uses on their systems and whose existing curtailment plans already classify high priority users ahead of all other uses. Another situation might find a pipeline's natural gas supply and existing curtailment plan adequate to forestall curtailment of high priority users and essential agricultural uses for the foreseeable future. In such cases it is not the Commission's intent to compel alteration of the existing curtailment plan needlessly. If an interstate pipeline's existing curtailment plan, given current supply projections, adequately protects those uses the statute seeks to protect, the interstate pipeline may file for an exception to the provisions of this rule.

Where modification of a pipeline's curtailment plan is required, individual pipelines may require a plan which varies from that in the proposed rule. Once again, the Commission seeks to be sensitive to the differences among interstate pipelines. Should differing treatment be appropriate for individual pipelines the Commission is prepared to recognize this fact and respond accordingly.

In past curtailment proceedings the parties have often arrived at a settlement of all issues without resort to adjudicatory proceedings before the Commission. This procedure may be appropriate here, and nothing in the proposed rule precludes any interstate pipeline and its customers from proposing, as a settlement, a curtailment plan that differs from that set out in our proposed rules. Such a settlement will be evaluated by the Commission in light of its ability to meet the statutory goal of protecting, to the maximum extent practicable, high priority users and essential agricultural uses.

### SUMMARY OF PROPOSED RULE

The proposed rule would have interstate pipelines file revised curtailment plans setting forth two new categories, placing high priority users and essential agricultural uses ahead of existing curtailment categories. The Commission views this as a reclassification of existing curtailment plans so that uses once categorized on another basis would now be categorized as high pri-

ority users or essential agricultural uses.

The requirements of high priority users would be the same as the requirements for those users currently reflected in existing interstate pipeline curtailment plans.[1] Thus, were an interstate pipeline curtails on a past fixed base period the high priority user requirements would be those reflected in the base period data. Where an interstate pipeline uses an alternate approach to curtailment then the high priority user's requirements would be computed on the same basis as they are computed in the interstate pipeline's presently effective curtailment plan.

Under the Commission's proposed rules essential agricultural uses requirements will be calculated on the same basis as they are calculated in the interstate pipeline's presently effective curtailment plan. Thus, where an interstate pipeline curtails based on a past fixed base period, the requirements will be the base period allocation. Where another basis is used that method will be used. After this volume is calculated, the user's alternate fuel capability will be subtracted out. The Commission is of the view that this will help insure that uses without alternate fuel capability, those most in need of protection, receive the highest curtailment classification. Failure to examine alternate fuel capability would result in the rule protecting those with alternate fuel capability on the same basis as those without that capability, thereby diminishing the quality of the protection afforded to those who most need it.

Where a determination is made that certain requirements can be satisfied with alternate fuel, those requirements will not be reclassified. This may result in certain end user's volumes being split among various curtailment categories. This is not unusual and has been done in the past with industrial needs which may be divided among process, feedstock and boiler fuel requirements with curtailment of the lower priority uses occurring while the same end user's high priority needs are served.

This proposed rule is linked to the basis upon which the interstate pipeline now curtails. This is designed to result in minimal disruption of existing curtailment plans as expressed in the NGPA Conference Report at page 113:

For purposes of implementing this section, the Commission is instructed to reopen curtailment plans that are already in effect under the Natural Gas Act only to the extent necessary to adjust those plans to bring them into conformity with the new curtailment priority schedule. The conferees were concerned that these changes not burden the Commission with lengthy proceedings which might throw existing curtailment plans into disarray. Therefore, the conference agreement includes the term "to the maximum extent practicable" to assure that the Commission has the necessary flexibility in implementing any changes. For example, the conferees do not intend the reopening of curtailment plans for this limited purpose to result in adoption of a new base year for curtailment purposes.

In the course of the Commission's consultation with the Department of Agriculture, pursuant to section 401(b) of the NGPA, two alternative methods of calculating agricultural requirements were suggested.[2] The Commission is giving serious consideration to these proposals as alternatives that might be adopted in place of the procedure in the proposed rule. The Secretary of Agriculture has stated:

The Department of Agriculture has taken the position that the proposed rule would not achieve the statutory intent that access of agricultural users to pipeline supplies of gas be protected at significantly higher levels than previously and that such additional protection of gas supply must be available to agricultural users on equally favorable economic terms with other pipeline gas supplies that are protected against curtailment.

The USDA has recommended the following as one possible way to achieve the statute's intent in a practicable way:

1. Small-scale agricultural uses, as defined in the January 3, 1979, draft FERC rule, would be placed in the high-priority classification under a broad interpretation of the definition of "commercial establishments using less than 50 mcf per peak day." Such users would be presumed to lack the economic practicability to utilize a fuel other than natural gas in their operations, and would be protected in their access to gas on demand within appropriate tariff provisions or up to contract entitlements.

2. For essential agricultural uses under 401(f)(1)(A), protect all projected and verified natural gas requirements of certified essential agricultural users up to contract entitlements, with a rebuttable presumption that such users lack the economic practicability to utilize a fuel other than natural gas in their operations.

3. For essential agricultural uses under 401(f)(1)(B), natural gas requirements would be computed as:

(a) the certified peak use, in the time frame normally employed by the pipeline, during a rolling 3-year base period; plus

(b) the volume of natural gas the essential agricultural user would have consumed in that curtailment period but for curtailment or plant shutdowns.

For determination of past curtailments and plant shutdowns, the burden of coming forward with the relevant verifiable information would be upon the agricultural users, and such information would be rebuttably presumed to be accurate. This would generally eliminate sequential determination on economic practicability and reasonable availability of alternate fuels; agricultural users would be rebuttably presumed to lack the economic practicability to utilize a fuel other than natural gas up to the base corrected for past curtailments and plant shutdowns.[3]

Comment is invited on the USDA preferred proposal, regarding (1) its sufficiency in fulfilling the intent of the statute and (2) its practicability of implementation.

However, should the Commission decide to adopt a historical base period approach the Department of Agriculture would advance an alternative proposal, although USDA emphasizes that the proposal set out above is the preferred approach in its view. USDA's alternative proposal follows:

1. Small-scale agricultural uses, as defined in the January 3, 1979, draft rule, would be placed in the high-priority classification under a broad interpretation of the definition of "commercial establishments using less than 50 mcf per peak day." Such users would be presumed to lack the economic practicability to utilize a fuel other than natural gas in their operations, and would be protected in their access to gas on demand within appropriate tariff provisions or up to contract entitlements.

2. For all other essential agricultural uses, natural gas requirements would be computed as:

(a) the certified peak use, in the time frame normally employed by the pipeline, during a rolling 3-year period; plus

(b) the volume of natural gas the essential agricultural user would have consumed in that curtailment period but for curtailment or plant shutdowns.

3. For determination of past curtailments and plant shutdowns, the burden of coming forward with the relevant verifiable information would be upon the agricultural user, and such information would be rebuttably presumed to be accurate. This would generally eliminate sequential determination on economic practicability and reasonable availability of alternate fuels; agricultural users would be rebuttably presumed to lack the economic practicability to utilize a fuel other than natural gas up to the base corrected for past curtailments and plant shutdowns.[4]

Comment is invited on the USDA's second proposal regarding (1) its sufficiency in fulfilling the intent of the statute and (2) its practicability of implementation.

Should USDA's second approach be adopted, the Commission would continue to employ the data verification committees of the various interstate pipelines in order to examine require-

[1] The Commission's rule conforms to the Department of Energy's proposed rule insofar as it considers the alternate fuel capability of high priority users. If the Department of Energy's proposed rule is altered, appropriate modifications will be made to this rule.

[2] Memoranda submitted to the Commission by the USDA pursuant to this consultation are in the public record in this docket.

[3] Memorandum from Secretary Bergland to Commissoner Hall, Subject: USDA Comments on FERC Proposed Rule, dated January 9, 1979. The definition of small agricultural use proposed by USDA is the same as that in the proposed rule.

[4] Memorandum from Mr. Barton to Commissioner Hall, January 6, 1979.

ments. The data verification committees would be instructed to determine that small users be deemed to have no alternate fuel capability and that they be given treatment comparable to high priority uses. For all other essential agricultural uses the data verification committee would be instructed to determine the peak use of the essential agricultural use over the past three years, with such use determined on the basis on which the interstate pipeline's curtailment plan is based such as daily seasonally monthly, or annually. If the essential agricultural user demonstrated that it had been curtailed during this period of time and that the use of a three year rolling period did not adequately cover a period where there had been no curtailment, the volumes that would have been used if there were no curtailment would be added into this requirement. Implementing this rule, the Commission would eliminate its presumption of past alternate fuel use as in indication of economic practicability and reasonable availability of alternate fuels now. Any challenges to essential agricultural users requirements calculated under this method would be adjudicated with the burden of proof on the challenger, and any adjustment in the essential agricultural users requirements would be prospective only.

How essential agricultural use requirements are to be calculated including the determination of alternate fuel capability is a major issue. The Commission specifically requests comments on this aspect of the proposed rule in general and both of the USDA's proposals in particular. Parties who prefer other alternate approaches are requested to submit the proposed methods for computing the requirements of essential agricultural uses. The practical implications of the various proposals on interstate natural gas pipeline systems and the impact on natural gas demands by consuming category should be analyzed and evaluated.

Parties to this proceedings should be aware that the Commission is considering adoption of a direct purchase program as contemplated by section 608 of the Public Utility Regulatory Policies Act of 1978. The proposed changes would provide an opportunity for agricultural users of natural gas whose requirements are not covered by pipeline curtailment plans to obtain natural gas by means of direct purchases. The changes in this program, if adopted, should provide an important complement to the rule proposed here.

To reclassify high priority users or essential agricultural uses, it will be necessary for the pipelines to identify such end users. The Commission recognizes that many of those classified as high priority uses in the NGPA are already classified in pipeline curtailment Category One. To the extent such consumers are known and their requirements, whether individually or aggregated by distributor, are known to the interstate natural gas pipeline they would not be expected to file requests for reclassification nor would their requirements be subject to reexamination by data verification committees. The requests for reclassification should contain the information set out in the proposed rule and any other information that a person seeking reclassification deems relevant. This requested information is comprehensive so as to obviate the need for additional requests for information.

The rule provides that suppliers of natural gas, where appropriate, are to review the request for reclassification and indicate whether to the best of their knowledge, information, and belief the statements made by the end user are true. These requests for reclassification will then be forwarded to the interstate pipeline suppliers.

Each interstate pipeline will use its Data Verification Committee to review the data submitted. Interstate pipelines that do not presently have data verification committees are to form them. Interstate pipelines with existing data verification committees should continue to employ those committees.

The Commission anticipates that the data verification proceedings will be informal forums for the amicable resolution of disputes. The Commission has set out in its proposed rule the minimum requirements for membership, but individual pipelines may choose to add additional members, and groups of customers may designate an individual to serve as their representative. While the proposed regulation specifies those groups who we expect to be represented, attendance by any member of the Data Verificaiton Committee is, of course, not mandatory.

The Data Verification Committee is expected to examine the information submitted by the end user and determine whether the end user actually qualifies for reclassification as a high priority user or essential agricultural use. Once this decision is made the Data Verification Committee is expected to examine the requirements of the high priority user and the essential agricultural use and compute them in accordance with the provisions of this rule. Where necessary, high priority users, agricultural users or challengers may appear before the Data Verification Committee.

The report of the Data Verification Committee, as spelled out in this rule, is required to be in detail. It is to be the basis of the interstate pipeline's tariff filing. Once the interstate pipeline files the proposed tariff sheets with the Data Verification Committee's report the Commission will review the tariff filing and Data Verification Committee report. Where there are challenges to the Data Verification Committee report, or the Data Verification Committee has not been able to reach an agreement on a recommendation, challenges will be heard by the Commission. In those proceedings the burden of proof will be on those who seek to change the status quo. Thus, if an essential agricultural use is challenged based on alleged availability of alternate fuel and its economic practicability and that end user has not used alternate fuel in the past, the burden of proof would be on the challenger.

Where a consumer has been denied reclassification by the data Verification Committee or where a consumer with a high priority or essential agricultural use believes its requirements were inaccurately stated by the Data Verification Committee the challenge to the Data Verification Committee report will be construed as a complaint under Section 1.6 of the Commission's regulations.

The proposed rule also defines alternative fuel capability for the purposes of implementation of section 401. The definition of alternate fuel capability contained in section 401(b) of the NGPA differs from that presently contained in the Commission's regulations. The new definition of alternate fuel capability is proposed solely for the purposes of this rule so as not to require a relitigation of existing curtailment plans. One difference from the Commission's existing rule is that propane and other gaseous fuels are not excluded from the definition of alternate fuel by this rule. The Commission believes that the standard set out in the statute, reasonably available and economically practicable will provide an adequate basis for dealing with propane and other gaseous fuels on a case-by-case basis, or where appropriate, on a blanket basis. Comments are requested on the Commission's proposed treatment of propane and other gaseous fuels.

It may not be possible for the Data Verification Committee to examine the alternative fuel capability criteria in each case becasue of time constraints. In such situations the Data Verification Committee may elect to submit its report calculating alternate fuel capability based ona ctual past use under the presumption established in the rule. It would be desirble for the Data Verification Committee to consider all factors in reaching its decision but it is also important to complete determination of requirements under the permanent rule as promptly

as possible in order to limit uncertainty.

The proposed rule deems small essential agricultural users, those consumers using less than 50 Mcf per day, at each separately metered delivery point as not having alternate fuel capability. Additionally, small low load factor agricultural users are presumed not to have alternate fuel capability.[5] These features of the rules are designed to minimize litigation involving small users and low load factor users so that the Commission's implementation program does not become backlogged because of excessive adjudication of disputes involving small volumes of natural gas. The presumption also reflects experience with small users that indicates that they generally do not have economically feasible alternatives. Generally, small natural gas users do not have alternate fuel capability and would have great difficulty converting to alternative fuel such as coal, solar energy, or waste heat. As a general proposition in most curtailment cases the Commission has classified small volume users with a relatively high priority.

Where there are challenges to the report of the Data Verification Committee and the associated tariff filing the Commission will establish procedures to adjudicate those challenges. It is hoped that the use of the data verification committees will minimize the number of disputes that require adjudication. Where the Commission determines that a high priority user or an essential agricultural use has been misclassified by the Data Verification Committee the Commission will grant relief prospectively. However, where a consumer received excess volumes while the Commission was adjudicating the challenge to its requirements or status, the Commission reserves the right to order payback of excess volumes in appropriate cases.

PUBLIC COMMENT PROCEDURES

Interested persons may participate in this proposed rulemaking by submitting written data, views or arguments to the Office of the Secretary, Federal Energy Regulatory Commission, 825 North Capitol Street, N.E., Washington, D.C. 20426, on or before February 26, 1979. Each person submitting a comment should include his name and address, identify the notice (Docket No. RM79-15), and give reasons for any recommendations. An original and 14 conformed copies should be filed with the Secretary of the Commission. Comments should indicate the name, title, mailing address, and telephone number of one person to whom communications concerning the proposal may be addressed. Written comments shall be placed in the Commission's public files and will be available for public inspection at the Commission's Office of Public Information, Room 1000, 825 North Capitol Street, N.E., Washington, D.C. 20426, during regular business hours.

The Commission intends to allow an opportunity for the oral presentation of data, views and arguments. One such proceeding will be held in Washington, D.C. and additional proceedings will be scheduled at appropriate times and places. The Commission solicits suggestions as to where it would be appropriate to hold such other proceedings and the names of those interested in appearing. Such requests should be submitted by January 25, 1979 to the Secretary, Federal Energy Regulatory Commission, 825 North Capitol Street, NE., Washington, D.C. 20426. Requests should reference Docket No. RM79-15 and indicate whether the request is for Washington, D.C. or elsewhere. The dates and exact locations of the public hearings will be announced as soon as practicable.

(Administrative Procedure Act (5 USC §553), Natural Gas Act, as amended (15 U.S.C. 717), Department of Energy Organization Act, Pub. L. 95-91, E.O. 12009, 42 FR 46267), Federal Energy Administration Act (15 U.S.C. 761), Energy Supply and Environmental Coordination Act (15 U.S.C. 791), Natural Gas Policy Act of 1978, Pub. L. 95-621, Public Utility Regulatory Policies Act of 1978, Pub. L. 95-617.)

In consideration of the foregoing, it is proposed to add Part 281, Subpart B, Title 18, Code of Federal Regulations, as set forth below:

By direction of the Commission.

KENNETH F PLUMB,
*Secretary.*

## PART 281—NATURAL GAS CURTAILMENT

### Subpart B—Proposed Rule for Curtailment of Natural Gas Under Section 401 of NGPA

Sec.
281.201 Purpose.
281.202 Applicability.
281.203 Definitions.
281.204 General rule.
281.205 Request for classification.
281.206 Review of requests for reclassification.
281.207 Data Verification Committee.
281.208 Protests and challenges.

AUTHORITY: (Administrative Procedure Act (5 USC §553), Natural Gas Act, as amended (15 U.S.C. 717), Department of Energy Organization Act, Pub. L. 95-91, E.O. 12009, 42 FR 46267), Federal Energy Administration Act (15 U.S.C. 761), Energy Supply and Environmental Coordination Act (15 U.S.C. 791), Natural Gas Policy Act of 1978, Pub. L. 95-621, Public Utility Regulatory Policies Act of 1978, Pub. L. 95-617.)

§ 281.201 Purpose.

The purpose of this subpart is to implement section 401 of the NGPA in order to provide that effective November 1, 1979, the curtailment plans of interstate pipelines protect to the maximum extent practicable, deliveries of natural gas for essential agricultural uses and for high-priority uses.

§ 281.202 Applicability.

This subpart applies to sales of natural gas made by an interstate pipeline on and after November 1, 1979, if the pipeline is curtailing its sales of natural gas.

§ 281.203 Definitions.

(a) *NGPA definitions.* Terms defined in the NGPA shall have the same meaning for purposes of this subpart as they have under the NGPA, unless further defined in this subpart.

(b) *Subpart B definitions.* For purposes of this subpart:

(1) "NGPA" means the Natural Gas Policy Act of 1978.

(2) "School" means a facility the primary function of which is delivering instruction to regularly enrolled students in attendance at such facility. Facilities used for both educational and noneducational activities are not included under this definition unless the latter activities are merely incidental to the delivery of instruction.

(3) "Hospital" means a facility the primary function of which is delivering medical care to patients who remain at the facility. Outpatient clinics or doctors' offices are not included in this definition. Nursing homes and convalescent homes are included in this definition.

(4) "Essential agricultural use" means any use of natural gas which is certified by the Secretary of Agriculture under 7 CFR § 2900.3 as an "essential agricultural use" under section 401(c) of the NGPA.

(5) "Essential agricultural user" means a person who uses natural gas for an essential agricultural use.

(6) "High-priority use" means any use of natural gas:

(i) In a residence;

(ii) In a commercial establishment in amounts of less than 50 Mcf on a peak day;

(iii) In a school or hospital; or

(iv) By any person who is designated by the Secretary of Energy as a "high-priority user" under 10 CFR § 580.2(c)(2)(iv).

(7) "High-priority user" means a person who consumes natural gas for a high-priority and who does not have installed alternate fuel capability.

[5] Load factors are computed by taking the total annual consumption and dividing that figure by 365. The resulting figure, the average daily consumption, is then divided by the consumption on the day of highest use during the year. If the result is equal to or less than .20 the consumer is a low load factor user within this definition.

(8) "High-priority requirements" for a curtailment period from a particular interstate pipeline means the high-priority requirements as determined by the Data Verification Committee under § 281.207 or the high-priority requirements as determined by the Commission, as appropriate.

(9) "Essential agricultural requirements" for a curtailment period from a particular interstate pipeline means the essential agricultural requirements as determined by the Data Verification Committee under § 281.207 or the essential agricultural requirements as determined by the Commission, as appropriate.

§ 281.204 General rule.

(a) Each interstate pipeline shall file tariff sheets amending its effective curtailment plan to provide that the total requirements for high-priority uses and essential agricultural uses are fully met prior to delivering natural gas for any other end use. These end uses are designated end-use priorities one and two and, for all interstate pipelines with existing curtailment plans based on numbered priority of use categories, those existing categories are renumbered to follow sequentially the new priorities one and two. In the event the interstate pipeline has insufficient gas available to meet both its high-priority requirements and essential agricultural requirements, the high-priority requirements will be fully served before any deliveries are made for essential agricultural requirements.

(b) The tariff sheets shall be filed on October 1, 1979, with a proposed effective date of November 1, 1979. The tariff sheets shall contain the conditions prescribed in paragraph (a) and indicate the volumes as determined by the Data Verification Committee under § 281.207, needed to serve the requirements of the high-priority users and the essential agricultural users for which there is no alternate fuel. The report of the Data Verification Committee shall be the basis of the tariff filing and shall be filed with the tariff sheets required by this subpart.

§ 281.205 Request for classification.

(a) Any end user of natural gas may file a request with its direct supplier to classify a specified volume of its purchases as high-priority use or essential agricultural use.

(b) Except as provided in paragraph (c), the end user shall submit under oath the following information, where applicable, to its direct supplier:

(1) Name of end user;

(2) Address of end user;

(3) Standard Industrial Classification (SIC) code of activity for which natural gas is required;

(4) Direct supplier of natural gas;

(5) Current curtailment priority classification;

(6) Contract entitlement for the calendar years 1976, 1977, and 1978, computed on the basis or bases utilized by the supplier (e.g., daily, monthly, seasonal, annual);

(7) Actual agricultural use computed on the basis or bases utilized by the supplier (e.g., daily, monthly, seasonal, annual) for the calendar years 1976, 1977, and 1978;

(8) The current requirements of the high-priority end user as reflected in the interstate pipeline's curtailment plan;

(9) If natural gas volumes have been curtailed, the dates of such curtailment and the amount of gas curtailed;

(10) Whether the end user has alternative fuel available;

(11) Whether any fuel other than natural gas, has ever been used by the end user for end uses designated as essential agricultural uses or high-priority use and, if another fuel has been used, the dates of such use and the amount of alternate fuel used; and

(12) Whether fuels other than natural gas are planned to be used in the future; if so, the fuel and the amount involved.

(c) Residential and small commercial customers who use less than the 50 Mcf of natural gas on a peak day are not required to file with their direct supplier. Direct suppliers shall base these requirements on those already included in pipeline curtailment plan or, if none, they may estimate the high-priority requirements of these customers.

(d) The request described in paragraph (b) must be filed with the direct supplier by June 10, 1979.

§ 281.206 Review of requests for reclassification.

(a) *Suppliers.* (1) The natural gas supplier shall determine whether to the best of its knowledge, information and belief, the statements made by the end user requesting reclassification of natural gas as a high-priority use, or as an essential agricultural use are true.

(2) Where appropriate, the supplier shall file under oath the information with its interstate pipeline supplier no later than June 25, 1979. a copy of the information shall be sent simultaneously to the appropriate state or local regulatory authority. If the supplier has more than one interstate pipeline supplier, the volumes for which the reclassification is sought shall be prorated among the interstate pipeline suppliers on the same basis as proration was made for purposes of the interstate pipeline's effective curtailment plan.

(b) *Interstate pipelines.* No later than June 30, 1979, the interstate pipeline shall forward all requests for reclassification as high-priority use or essential agricultural use to the Data Verification Committee and circulate a list of customers seeking such classification to all its distributors, appropriate State and local regulatory authorities, all parties to its curtailment proceeding and the Commission staff.

§ 281.207 Data Verification Committee.

(a) The Data Verification Committees of each interstate pipeline shall include at a minimum a representative of the interstate pipeline, Commission staff, large and small distributors and appropriate State or local regulatory bodies. If an interstate pipeline does not have a Data Verification Committee, it shall form one.

(b) The interstate pipeline shall convene a meeting of the Data Verification Committee within 10 days of receipt of the information sent to it under § 281.206.

(c) The Data Verification Committee shall review the requests for reclassification and shall make an initial determination of the essential agricultural requirements and high-priority requirements of each person requesting reclassification. The initial determination of the Data Verification Committee shall be made in accordance with subparagraphs (1) and (2).

(1) *High-priority users and essential agricultural users.* The high-priority requirements of a high-priority user and the essential agricultural requirements of an essential agricultural user shall be the maximum volume the high-priority user or essential agricultural user would be entitled to purchase for high-priority use or essential agricultural use under the interstate pipeline's effective curtailment plan, but not including volumes a high-priority user or essential agricultural user may receive solely by operation of Subpart A, or volumes obtained under § 2.79, less volumes of natural gas for which the high-priority user or essential agricultural user has alternate fuel capability.

(2) *Determination of alternate fuel capability.* (i) For purposes of this paragraph and except as provided in clause (ii), alternate fuel capability will be deemed to be equal to the least amount of alternate fuel actually used in the comparable curtailment period of lowest alternate fuel use during the past three years.

(ii) (A) A person whose natural gas consumption for high-priority use or essential agricultural use during the curtailment period on which the interstate pipelines curtailment plan is based did not exceed a peak day requirement of 50 Mcf at each separately metered delivery point is deemed to have no alternate fuel capability.

(B) A person whose natural gas consumption for high-priority use or essential agricultural uses during the curtailment period on which the interstate pipelines curtailments is based did not exceed 300 Mcf on a peak day at each separately metered delivery point and whose average daily requirements for essential agricultural uses, measured over the calendar years 1976, 1977, and 1978 did not exceed 20 percent of such person's peak day requirement for essential agricultural uses measured on the 36-month period ending October 31, 1978, is deemed to have no alternate fuel capability.

(C) The Data Verification Committee shall compile a list reflecting its initial determination of high-priority requirements and essential agricultural requirements. This list shall be prepared by August 1, 1979, and simultaneously a copy shall be mailed to the interstate pipeline, all of its distributors, appropriate State and local regulatory authorities, all parties to its curtailment proceeding and the Commission staff.

(D) Any person aggrieved by an initial determination of the Data Verification Committee may challenge the determination on the basis of the actual use of the natural gas, the volumes of natural gas required for the high-priority use or the essential agricultural use or the alternate fuel capability determination. Any person challenging an initial determination shall be permitted to make an oral or written presentation to the Data Verification Committee.

(E) Subject to the provisions of subparagraphs (1) and (2) the Data Verification Committee may adjust the challenged initial determinations.

(*l*) *Alternate fuel capability.*

(*i*) Any person challenging an initial determination on the basis of alternate fuel capability shall have the burden of proving there is no alternate fuel capability.

(*ii*) For purposes of this subparagraph "alternate fuel capability" means a condition where a fuel other than natural gas could be utilized to achieve the end use of natural gas. The facilities for such use may have actually been installed, but a potential capability to use a fuel other than natural gas also qualifies as an alternate fuel capability. Alternate fuel capability exist when use of alternate fuel is economically practicable and reasonably available to the end user. A fuel other than natural gas is deemed economically practicable when the cost of such other fuel plus the cost of the facilities required to utilize such fuel are, when compared with natural gas on the basis of units of energy displaced, sufficiently similar so that the user might reasonably be expected to use either fuel without serious adverse financial consequences.

(*iii*) In determining alternate fuel capability as defined in clause (*ii*), the following factors shall be considered:

(*A*) Does the facility or industry in question have the installed capacity to use an alternate fuel?

(*B*) Does the present state of technology permit the use of an alternate fuel to perform the particular end use?

(*C*) Do other similar types of consumers presently utilize fuels other than natural gas?

(*D*) If alternate fuel capability is technically feasible, what is the cost of conversion or replacement of facilities so that alternate fuel can be utilized?

(*E*) What is the projected cost of the alternate fuel?

(*F*) What is the projected cost of natural gas?

(*G*) Are there any other out-of-pocket costs required to utilize natural gas?

(*H*) What part of the end user's total costs is attributable to the cost of fuel?

(*I*) What competitive disadvantage will the end user suffer if it utilizes a fuel other than natural gas?

(*J*) What is the projected availability of natural gas for that end user?

(*K*) What is the projected availability of fuels other than natural gas?

(*2*) *Essential agricultural requirements.* An end user may request an increase of the initial determination of its essential agricultural requirements on the grounds that the initial determination is not sufficient to satisfy its natural gas needs for full food and fiber production. The Data Verification Committee may increase the essential agricultural requirement up to the contract entitlement if it determines that no other source of natural gas is available to satisfy these requirements including but not limited to purchases by the distributor or end user.

(F) By September 15, 1979, the Data Committee shall make a final determination of the high-priority requirements and essential agricultural requirements of each person seeking reclassification. This determination and the report described in paragraph (g) shall be sent by September 15, 1979 to the interstate pipeline, the pipeline's distributors, appropriate state and local regulatory authorities, all parties to the interstate pipeline's curtailment proceeding, the Commission staff and all customers who sought reclassification.

(G) No later than September 15, 1979, the Data Verification Committee shall prepare a report which contains the following information:

(*1*) a list by end user indicating:

(*i*) the volume for which reclassification is sought;

(*ii*) the standard industrial classification of the end user;

(*iii*) the alternate fuel capability as determined by the Data Verification Committee; and

(*iv*) the high-priority requirements or essential agricultural requirements as determined by the Data Verification Committee;

(*2*) a list by end user and the volumes requested for reclassification for whom a challenge to such reclassification was made if such challenge has not been resolved and the basis, therefore, and a list of those for whom insufficient information existed to make a determination as to whether the essential reclassification is appropriate;

(*3*) the recommendation of the Data Verification Committee as to the appropriate resolution of any challenge to a request for reclassification as a high-priority user or as an essential agricultural use;

(*4*) a copy of the minutes of the Data Verification Committee meeting.

**§ 281.208 Protests and challenges.**

(a) *Protests.* Protests to this tariff filing shall be limited to further challenges to natural gas end users seeking reclassification in either priority-of-service category one or two, challenges by customers who were denied certification by the Data Verification Committee as either high-priority users or essential agricultural users on whose requirements were decreased by the Data Verification Committee. All such protests shall be treated as complaints pursuant to § 1.6 of this chapter. The Secretary of Agriculture may intervene as a matter of right under § 1.8(a)(1) of the chapter in any proceeding initiated under this section.

(b) *Burden of proof.* (1) In the case of a consumer being challenged as to the propriety of its inclusion in priority-of-service category one or two, the consumer shall have the initial burden of going forward to explain why it should be included in either priority-of-service category one or two. The ultimate burden of proof is upon those challenging the end users inclusion to show conclusively that the end user is not a high-priority user or essential agricultural use, that the requirements of the end users approved by the Data Vertification Committee are not correct or, that alternate fuel technology exists and that use of an alternate fuel is economically practicable and that such fuel is reasonably available.

(2) In the case of challenge by an end user that has been denied certification by the Data Verification Committee as either a high-priority user or essential agricultural use or in the case of a certified consumer whose pri-

ority-of-service category one or two requirements were decreased by the Data Verification Committee, the challenge will be construed as a complaint pursuant to § 1.6 of this chapter.

(3) In the case of an end user that has provided insufficient information upon which to conclude that it qualifies for either priority-of-service category one or two treatment, the consumer's request for classification will be construed as a complaint pursuant to § 1.6 of this chapter.

(c) *Commission decision.* (1) If the Commission determines that an end user who has been temporarily classified in priority-of-service category one or two does not qualify for the classification, the end user shall be placed in the appropriate curtailment category.

(2) The Commission, in its discretion, may direct the payback to excess volumes taken while the end user was temporarily misclassified.

(3) If the Commission finds that an end user who was denied certification as a high-priority user or an essential agricultural use qualifies for such status, the end user shall be reclassified on a prospective basis.

(4) If the Commission finds that a certified end user whose requirements were decreased by the Data Vertification Committee, warrants the recognition of increased requirements, the increase shall be granted on a prospective bases.

[FR Doc. 79-2035 Filed 1-17-79; 8:45 am]

---

[4110-02-M]

## DEPARTMENT OF HEALTH, EDUCATION, AND WELFARE

### Office of Education

[45 CFR Chapter I]

### LAW-RELATED EDUCATION PROGRAM

#### Availability of Draft Proposed Regulations

AGENCY: Office of Education, HEW.

ACTION: Notice of availability of draft proposed regulations.

SUMMARY: Notice is given that a first draft of proposed regulations to implement the Law-Related Education Act of 1978 is now available to the public.

The program was enacted by the Education Amendments of 1978 as Part G of Title III of the Elementary and Secondary Education Act. It authorizes the Commissioner to award grants and contracts to encourage State and local educational agencies and other public and private nonprofit agencies, organizations, and institutions to provide law-related education programs.

The program has not been funded for Fiscal Year 1979, and it is not clear whether it will be funded for Fiscal Year 1980. Regulations are being developed for the program in the event that it is funded. The draft proposed regulations now available have not been adopted as official views of either the U.S. Office of Education or the Department of Health, Education, and Welfare. They have no legal effect.

ADDRESS: Copies of these draft proposed regulations may be obtained by writing to: Steven Y. Winnick, U.S. Office of Education, Room 4091, 400 Maryland Avenue, SW., Washington, D.C. 20202.

FOR FURTHER INFORMATION CONTACT:

Steven Y. Winnick, telephone (202) 245-8953.

Dated: January 11, 1979.

JOHN ELLIS,
*Acting U.S. Commissioner of Education.*

[FR Doc. 79-1772 Filed 1-17-79; 8:45 am]

---

[6712-01-M]

## FEDERAL COMMUNICATIONS COMMISSION

[47 CFR Part 73]

[Docket No. 21310; RM-1847; RM-1984; RM-2742; FCC 79-1]

### FM QUADRAPHONIC BROADCASTING

#### Further Notice of Inquiry

AGENCY: Federal Communications Commission.

ACTION: Further notice of inquiry.

SUMMARY: Federal Communications Commission issues Further Notice of Inquiry to determine the extent that adoption of proposed quadraphonic broadcasting standards would preclude the Commission's option of reducing the FM broadcast channel spacing and the feasibility of operation of the proposed systems within a possible reduced channel spacing. The Inquiry seeks to further examine the merits of alternative systems in addition to the proposed systems. The effect on SCA operation will be studied.

DATES: Comments must be received on or before April 16, 1979 and reply comments must be received on or before May 16, 1979.

ADDRESSES: Federal Communications Commission, Washington, D.C. 20554.

FOR FURTHER INFORMATION CONTACT:

Albert S. Jarratt, Sr., Broadcast Bureau (202) 632-7792.

SUPPLEMENTARY INFORMATION:

In the matter of FM Quadraphonic Broadcasting, Docket No. 21310, RM-1847, RM-1984, RM-2742. See also 43 FR 4678, February 1, 1978.

Adopted: January 2, 1979.

Released: January 10, 1979.

BACKGROUND

1. A Notice of Inquiry was released in this proceeding on July 6, 1977 (FCC 77-444, FR 42 FR 34913), as a result of three petitions filed with the FCC which proposed rules and standards for FM quadraphonic broadcasting. These petitions were filed by Pacific FM, Inc., RM-1847 (hereafter identified as "Pacific"), General Electric Company, RM-1984 ("GE"), and CBS, Inc., RM-2742 ("CBS").[1] A further consideration was the study performed by the National Quadraphonic Radio Committee (NQRC).[2] The objective of that Inquiry was to determine if there was sufficient interest to warrant the Commission's adoption of standards for quadraphonic broadcasting, and if so to develop a record which would assist the Commission in formulating the needed standards for this service.

2. Quadraphonic systems which have been studied in this proceeding fall into three general categories, 4-2-4, 4-3-4, and 4-4-4. Where four independent or discrete audio sources are encoded by a "matrix" into two signals transmitted as compatible left and right stereo signals to be later decoded back into four audio signals, the system has been designated as a 4-2-4 system. Where the four independent or discrete audio sources are combined and transmitted as a main channel plus either 2 or 3 subchannels, all to be later converted back into 4 (discrete in the case of 4-4-4) audio signals, the systems are designated as 4-3-4 or 4-4-4 respectively. In issuing its first *Notice of Inquiry*, the FCC recognized that it was faced with the difficult task of not only trying to evaluate the merits of 4-4-4, 4-3-4 and 4-2-4 systems as compared to each other, but also to evaluate the several designs being proposed.

3. Pacific and GE petitioned the FCC to adopt standards for 4-4-4

---

[1] These petitions were filed on August 23, 1971, May 30, 1972, and August 10, 1976, respectively.

[2] In 1972 the Electronic Industries Association sponsored the National Quadraphonic Radio Committee whose objective was to report to the Commission its conclusions regarding quadraphonic FM broadcasting standards. In November, 1975, the NQRC submitted its report and conclusions to the FCC. This report consists of two volumes, of which Volume One is a summary of the tests and conclusions and Volume Two, consisting of 5 Parts, includes the various tests performed on receivers, interconnecting facilities, transmitters, field tests, and compatibility tests. This report was made a part of the record in this proceeding.

quadraphonic systems. Pacific proposed adoption of the system designed by Quadracast Systems, Inc. (QSI), whereas, GE proposed adoption of its system. the third petition was submitted by CBS for a 4-2-4 system identified under the trademark SQ.

4. The NQRC tests were performed primarily on 4-4-4 and 4-3-4 quadraphonic systems.[3] There was a lack of comparative test data for 4-2-4 systems since proponents of such systems did not choose to provide their equipment for tests: As a consequence, the Commission's Laboratory Division, Office of the Chief Engineer, performed comparative listening tests between 4-4-4, 4-3-4 and several 4-2-4 systems.[4,5]

5. A substantial record was developed in response to the *Notice of Inquiry.* Over 2,000 comments from broadcasters, manufacturers, and the general public were received. With few exceptions comments were in support of some form of quadraphonic broadcasting. Comments from the listening public were divided between expressions of interest for 4-4-4 and 4-2-4 quadraphonic systems. Although no significant preference was shown for any particular 4-4-4 system, those parties indicating interest in 4-2-4 systems predominantly favored the CBS SQ system.

6. A considerable number of comments were received from engineers, manufacturers, and broadcasters who addressed many of the questions contained in the *Notice of Inquiry.* Broadcasters were also split in their preferences for 4-2-4 and 4-4-4 systems. It is quite evident that the needs of broadcasters, taking into consideration location, market size, equipment limitations, etc. vary considerably. Many broadcasters are providing ancillary services through use of SCA's which may effect their ability to provide quadraphonic radio service.[6]

7. After analysis and review of the comments received to the *Notice of Inquiry,* the FCC has concluded that there is substantial interest in FM quadraphonic broadcasting. Additionally, technical comments received as well as the FCC's own analysis of technical data submitted indicate that 4-4-4/4-3-4 quadraphonic systems can be accommodated within the present frequency assignment plan without objectionable degradation to monophonic and stereophonic radio service. With these conclusions in mind and after considerations of the many technical issues involved, we believe that further action is warranted.

### Additional Considerations

8. This *Further Notice of Inquiry* is being issued to obtain additional information to assist the FCC as it gives further consideration to FM quadraphonic broadcasting. One of the primary questions remaining to be resolved is: What impact would the adoption of quadraphonic broadcasting standards have on the possibility of reducing the channel spacing in the FM broadcast band to 150 kHz or 100 kHz? In December of 1975, the Office of the Chief Engineer of the FCC released a report entitled "FM Broadcast Channel Frequency Spacing" (FCC/OCE RS 75-08). This document studies the effect of reducing the channel spacing for FM broadcasting stations from the present 200 kHz to 150 kHz or 100 kHz, and concludes "that from a technical point of view both the 100 kHz offset, with a low pass receiver filter after the second demodulator, and the 150 kHz offset are more efficient than the presently used 200 kHz offset, both in overall area coverage efficiency and in the available number of station assignments—i.e., in area and population coverage." The authors clearly state however that a number of assumptions have been made in developing the study. For example, the report notes that the study is based upon assuming "A simplified equilateral triangular co-channel assignment plan * * *" and observes that "* * * such a regular configuration is not representative of the true physical distribution of the distances between population centers * * *" The report also states "For lack of protection criteria the effect of reducing the frequency offset (channel spacing) upon SCA and quadraphonic operation could not be evaluated", and recognized that other non-technical aspects are important, such as the cost to change the operating frequency of many FM stations, and the cost of incorporating needed changes to both new and existing receivers. Though the study results reflect a very preliminary effort, the FCC considers it desirable to ascertain the extent to which adoption of standards for quadraphonic broadcasting might foreclose possible options should the Commission find it in the public interest to look toward reducing the spacing between FM broadcast channels, and we are requesting comments on this matter.

9. In addition, we wish to explore the feasibility of operation of the various proposed quadraphonic systems within the narrower channel spacing suggested by the OCE report. For example, it may be necessary with 150 kHz channel spacing to restrict all baseband signals to within 75 kHz, a point which could preclude some of the proposed quadraphonic systems as well as present and proposed SCA operations. We are therefore requesting comments concerning the effects on co-channel and adjacent channel protection ratios due to the operation of 4-2-4, 4-3-4 and 4-4-4 systems and SCA transmission, if FM channel separations should be reduced to 150 kHz or 100 kHz.* Pending a Commission determination regarding the efficacy of reducing FM channel spacings, we will further consider adoption of quadraphonic broadcasting standard(s) only for such system(s) as can be clearly demonstrated to not preclude possible future reductions in channel spacing.

10. After having first determined that the technical issues involved and interest by the public warrants further consideration of some form of quadraphonic broadcasting, the FCC's next task is to determine which system or combination of systems consistent with the restrictions discussed above will best serve the public interest. To arrive at this determination the FCC has concluded that certain threshold objectives should be met:

a. Any standards established must be compatible with the present monophonic and stereophonic broadcasting service.

b. Any system proposed should be capable of providing the highest quality service possible, consistent with reasonable cost. Such costs would include both the equipment necessary to implement and receive these transmissions and the spectrum space which may be necessary to provide for effective quadraphonic broadcasting.

c. Any standards established should be as broad as practical to permit the marketplace (broadcasters and listening public) to influence the selection between alternative transmission modes.

11. The FCC is of the view that any quadraphonic broadcasting standards proposed should allow licensees to select the particular transmission mode which best suits their needs as well as those of their particular listening audience. The primary considerations to broadcasters and listeners of the three quadraphonic modes proposed would be as follows:

---

[3] The 4-4-4 systems tested were those proposed by Quadracast Systems, Inc. (QSI), RCA Corporation, Cooper-UMX, General Electric Company, and Zenith Radio Corporation. Additionally, RCA and Cooper-UMX proposed 4-3-4 systems which are compatible with their 4-4-4 systems and existing SCA (Subsidiary Communication Authorization) standards.

[4] The 4-2-4 systems tested were QS (Sansui Electric Company, Ltd.), SQ (CBS, Inc.), and the BBC H Matrix.

[5] The FCC Laboratory report for these tests, "A Subjective Evaluation of FM Quadraphonic Reporduction Systems-Listening Tests" Project No., 2710-1, was released in August, 1977 and was made a part of the record.

* We recognize that 100 kHz Channel spacing would probably preclude presently permitted operation, such as stereo and SCA.

*4-4-4* This type of system involves four original audio channels encoded and transmitted over the main channel and three subchannels, to be received and decoded by the receiver into four audio channels. Broadcast stations presently equipped for stereophonic operation face a greater expense to implement this service than would be encountered by the other formats discussed below, and station coverage will be somewhat reduced. However, many commenting parties expressed the view that the 4-4-4 transmission provides the best overall quadraphonic performance. Existing SCA standards would generally have to be changed when transmitting in this mode.

*4-3-4* This type of system is similar to the 4-4-4 system with the exception that one subchannel is deleted such that the four audio channels are broadcast over the main channel and two subchannels. It is, therefore, not possible to uniquely recover the original four audio channels at the receiver, resulting in a degradation of the separation of the received channels. Stations opting for this mode would face expenses somewhat similar to those required for 4-4-4 transmissions. The potential loss of coverage area however, is less than that experienced with 4-4-4 transmissions and the existing SCA standardds could be retained. The 4-3-4 mode is considered to have many of the desirable characteristics of the 4-4-4 mode, although there are some inherent limitations, especially concerning the amount of separation between the audio channels. However, some of the comments expressed the view that this mode of transmission has the ability to provide acceptable "surround sound" reception. 4-4-4 and 4-3-4 transmissions can be made compatible so that a single decoder will decode either transmission mode. The cost of this equipment to the public appears to be about the same as for the 4-4-4 system.[7]

*4-2-4* This system also starts with four audio channels, however, it is encoded into the usual two stereophonic channels using the main channel and one subchannel. The four channels are encoded using phase and signal amplitude information such that the receiver can attempt to recover the original four channels of information. Because of the lack of separation between channels which results from this type of encoding, it is usually desirable to install "logic decoders" at the receiver in an effort to increase the apparent separation between the channels. Such logic enhancement in the receiver could increase the cost to the public of the necessary equipment, more so than the other systems listed above. There are also serious questions of "listening fatigue" that appear to occur with the use of such encoders over extended time periods.[8] Stations presently equipped for stereophonic transmissions could implement such a system with minimum expense as well as continuing SCA operations under existing standards. However, the performance of such a system is considered by many to have inherent overall limitations when compared to a 4-3-4 or 4-4-4 system.

12. The selection between 4-2-4, 4-3-4, and 4-4-4 modes may best be left to the marketplace. The broadcast marketplace has not been given a full opportunity to determine whether one of these three modes is preferred. Since August 9, 1972, the only quadraphonic transmissions permitted on a regular basis have been the 4-2-4 versions. In spite of this, it does not appear that there has been overwhelming public acceptance of these 4-2-4 system transmissions. Where feasible and practical, it is the Commission's desire to permit the marketplace to influence the choice between transmitted modes. One choice may be to permit both 4-2-4 and 4-3-4/4-4-4 transmissions.

13. In addition to the issues identified above, the FCC finds certain inherent faults in the proposed GE, Zenith and Cooper systems. On the other hand, a compatible 4-3-4/4-4-4 system similar to that proposed by QSI and RCA appears to offer the most nearly optimum quadraphonic sound reproduction at this time. Therefore, of the systems that were tested by the NQRC, we tend to prefer standards for a system that is similar to that proposed by QSI and RCA. The basis for this preference is system simplicity coupled with performance equal to other proposals.

14. GE proposes that the diagonal difference signal modulate the second quadraphonic subcarrier and that the front minus back information signal modulate the third quadraphonic subcarrier. Such an arrangement has been shown to be least desirable.[9] GE also proposes the use of a vestigial filter to reduce the upper sidebands of the third quadraphonic subchannel above 76 kHz. The use of this filter adds complexity to this system and is a potential source of distortion for the third subchannel. Thus, the FCC believes that this system does not provide the most compatible quadraphonic signal with the added disadvantages of increased complexity and potentially inferior audio linearity.

15. Zenith proposes that the diagonal difference signal modulate a third quadraphonic subcarrier at 95 kHz using a vestigial filter to reduce the upper sidebands which otherwise would cause an out-of-band interference condition. This system also includes optional variable pre-emphasis (from 25 to 225 microseconds) that is program level controlled. Two 57 kHz pilot tones, one in-phase and one in quadrature with the pilot subcarrier, are modulated with control signals representing variable pre-emphasis and audio signal compression respectively. The use of the 95 kHz subcarrier in the third quadraphonic information subchannel leaves the usual 67 kHz SCA operation unchanged. The FCC is critical of this system for the following reasons: a) use of a vestigial filter adds complexity and is a potential source of distortion for the third subchannel, b) placement of the third quadraphonic subcarrier on 95 kHz subjects this subchannel to more degradation from noise and interference than subcarriers at lower frequencies as proposed for other systems.

16. Cooper proposed a compatible 4-3-4/4-4-4 system which is a more complex system requiring several audio phase shift networks both at the transmitter and in each receiver. Because of the equal performance without this added complexity in the other systems which have been proposed, the FCC would tend to reject this system. Further discussion of this system is included in the Alternative Considerations.

17. The Quadracast Systems, Inc. (QSI) and RCA Systems are quite similar. The RCA system emphasis is on the compatible 4-3-4/4-4-4 aspect while the QSI system emphasis is on a 4-4-4 system. However, the QSI proposal includes a 4-3-4 option that is almost identical with the proposed RCA system. The second quadraphonic subcarrier is in quadrature (90°

[7] 4-2½-4 (Special Case of 4-3-4) This is similar to the 4-3-4 system, yet because of some differences from that system, it is being mentioned separately. The four channels of audio are similarly sent over the main channel and two subchannels, however, the second subchannel is reduced in both bandwidth and in its amount of modulation. Because of this reduction, the signal-to-noise ratio of the received signal, compared to usual stereophonic transmissioin, is reduced by only ½ to 1 decibel and the occupied bandwidth required for the transmission is reduced. Reduction of the coverage area of the station is, therefore, less than that of the 4-3-4 system. At the present it appears that only the UHJ universal system, under development in the United Kingdom, is being tested in this category.

[8] Logic enhancement (signal processing) may produce unnatural movements of the sound images which if listened to over an extended period of time may result in a condition termed "listening fatigue."

[9] The diagonal difference signal consists of the difference between the sum of the left front and right back signals and the sum of the left back and the right front signals. It was shown by RCA in its comments that the diagonal difference signal is less significant than the front minus back signals. It was also shown that the effects of crosstalk in the arrangement proposed by GE is more harmful.

out of phase) with the first subcarrier which is in phase with the 19 kHz pilot signal. Both systems use 76 kHz for a third quadraphonic subcarrier in addition to the conventional 38 kHz stereophonic subchannel. The main channel contains the monophonic information (left plus right) signal and the first subchannel contains the L-R (left minus right) signal as is presently done for stereophonic transmission. The RCA proposal specifies that the front minus back signal modulate the second quadraphonic subcarrier and the diagonal or criss-cross signal modulate the third quadraphonic subcarrier. The QSI proposal specifies that the diagonal difference signal modulate the second quadraphonic subcarrier and the front minus back signal modulate the third quadraphonic subcarrier. However, during the NQRC tests the signals on these two subcarriers were switched to agree with the preferred configuration. RCA proposed a second pilot subcarrier in phase quadrature at 76 kHz to control receiver mode switching, indicating a 4-4-4 transmission. RCA also suggested that the presence of a signal modulating the 38 kHz quadrature subcarrier could be used to indicate 4-3-4 transmission. QSI suggested that the 19 kHz pilot be used for the frequency/phase reference of all subcarriers including the SCA. Although QSI mentioned that a second pilot "may be optionally inserted" for mode indication, it stated that insertion of a second pilot tone may increase the overall intermodulation and multipath susceptibility. Therefore, QSI suggested that the presence of quadraphonic information may be used to automatically switch quadraphonic receiving modes and to indicate quadraphonic presence.

18. As a result of the test performed by the FCC Laboratory Division and the substantial number of comments received in this proceeding, the proposal submitted by CBS for its 4-2-4 SQ system is being given further consideration. This system is transmitted in exactly the same manner as the present stereophonic operation utilizing the standard 19 kHz pilot tone and a single 38 kHz subcarrier in phase with the pilot tone. It should also be noted that CBS has proposed the transmission of a 57 kHz pilot as an identification signal. However, such a pilot would interfere with present SCA transmissions.

19. The FCC prefers switching and mode indication techniques that minimize the use of additional pilot tones. The FCC will consider including an additional pilot tone for mode switching only upon a strong showing that such mode switching cannot be satisfactorily accomplished by use of other means. Informal comments to the FCC indicate that submerged switching tones (more than 60 decibels below 100 percent modulation of the main carrier) in the vicinity of 16 to 17 kHz may be practical to indicate which quadraphonic mode is being transmitted and to provide automatic receiver mode switching. Additional information concerning such techniques is requested.

### Alternative Considerations

20. Comments in reply to our *Notice of Inquiry* were received which, for example, concerned development of a quadraphonic system defined as a "universal system." Such a system contains within it characteristics such that 4-2-4, 4-3-4, and 4-4-4 transmissions are compatible. In other words, this is an extension of the compatible 4-3-4/4-4-4 concept, as discussed earlier and for which we have expressed a preference. Further, this concept would allow the listener to receive and decode any of the three modes transmitted.

21. However, such systems are still under development. The original Cooper-UMX System contained elements of such a universal system, but in its comments, Cooper concurs to changes of its system along the lines recommended by the NRDC (National Research and Development Corporation, a Corporation in the United Kingdom). Therefore, the Cooper-UMX system as modified approximates the HJ Universal system. This system (UHJ) advocates inclusion of a 4-2 1/2-4 mode. Because of the alleged flexibility that such a system would allow, the FCC desires that additional consideration be given to these proposals. The FCC desires to know what effect, if any, the adoption of standards permitting a "universal" system will have on the artistic freedom of live and recorded productions. Because the NRDC system is in the early stages of development, it has not been given serious consideration in this proceeding.

22. The FCC is therefore requesting comments addressing these systems and their feasibility. Also of interest in these comments would be the capability of the QSI/RCA 4-3-4/4-4-4 systems and the CBS SQ 4-2-4 system to lend themselves to practical conversion to a universal system in the future should such a system eventually be determined to be desirable. Claims have been made that other systems such as the UHJ system may optimize total sound reproduction and provide a more acceptable form of "surround sound." Any comments on the applications of these techniques in quadraphonic reproduction are requested.

### SCA Considerations

23. A number of comments were received from parties involved in the use of SCAs expressing concern that certain quadraphonic systems might preclude or cause degradation of SCA operations. Flexible quadraphonic standards which permit several transmission modes could provide options to the broadcaster in providing SCA service. Present SCA transmission standards would, for example, limit quadraphonic broadcasting to only the 4-3-4 (4-2 1/2-4) or 4-2-4 systems. However, the Commission could consider expanding the limits of the FM baseband from the present 75 kHz to 99 kHz to permit stations using the 4-4-4 mode of transmission to place an SCA at 95 kHz. Such an expanded limit would also allow a station transmitting stereo or the 4-3-4 quadraphonic mode to move its SCA to 76 kHz. It has been suggested that phase-locking the SCA to the fourth or fifth harmonic (76 or 95 kHz) of the 19 kHz pilot subcarrier will reduce cross modulation and intermodulation.

24. QSI proposes SCA standards at 95 kHz similar to those in use today, but RCA suggests that at 95 kHz the SCA subcarrier be limited to a modulating frequency of 2 kHz, an injection level of 5% and a deviation of ±2 kHz. Analysis of the NQRC data for protection ratios indicates that the more permissive standards proposed by QSI warrant further consideration. Additional comments are requested concerning the SCA standards proposed by QSI and the possible need to further modify those standards as proposed by RCA.

### Special Temporary Authorizations

25. In the event any station licensee determines that additional significant data can be obtained by over-the-air tests, the Commission will entertain applications for Special Temporary Authorizations. Any authorization will be conditioned with the requirement that the public be informed that the quadraphonic programs are being broadcast on a temporary basis, and that any receiving equipment purchased may have no utility after the testing period. Other conditions may also be imposed. The granting of such temporary authority will be strictly to gather needed information. The FCC will not be swayed in its final decision by claims of expenses encountered in implementing these tests.

### Other Matters

26. In addition to the quality of the reception from the various quadraphonic systems, along with other matters already covered, there have been a number of specific questions raised which were not adequately covered in

the comments to this proceeding. Many of these could possibly be resolved through the use of the STA's mentioned earlier. One such problem involves multipath distortion, especially the reception in a moving automobile. This matter has already been addressed on a theoretical basis but practical testing is needed.

27. The FCC will address quadraphonic modulation monitors at a later time. Also, the FCC is studying the desirability of requiring that quadraphonic generators be typed-accepted. Type-accepting generators may facilitate the substitution or addition of quadraphonic generators to existing transmitters. Further, as was of concern during the FM stereophonic proceeding (Docket No. 13506), here also the FCC requests that the proponents whose systems are included in this *Further Notice* submit information concerning the identity of persons or organizations applying for or holding patents on FM quadraphonic broadcast transmission and reception systems and apparatus. And, in addition, we are requesting information with respect to the arrangements that will be employed for the licensing of patents for competitive distribution and use of such systems and apparatus.

28. Pursuant to applicable procedures set forth in § 1.415 of the FCC's rules, interested persons may file comments on or before April 16, 1979, and reply comments on or before May 16, 1979. All relevant and timely comments and reply comments will be considered by the FCC before further action is taken in this proceeding.

29. In accordance with the provision of § 1.419 of the FCC's rules and regulations, an original and 5 copies of all comments, replies or other documents filed in this proceeding shall be furnished to the FCC. Participants filing the required copies who also desire that each Commissioner receive a personal copy of the comments may file an additional 6 copies. Members of the general public who wish to express their interest by participating informally in this proceeding may do so by submitting one copy of their comments, without regard to form, provided that the Docket Number 21310 is specified in the heading. Such informal participants who desire that responsible members of the staff receive a personal copy and to have an extra copy available for the Commissioners may file an additional 5 copies. Responses will be available for public inspection during regular business hours in the Commission's Public Reference Room (Room 239) at its headquarters in Washington, D.C. (1919 M Street, NW.). Further information concerning this proceeding may be obtained from Albert Jarratt, Sr., Broadcast Bureau 202-632-7792.

FEDERAL COMMUNICATIONS COMMISSION,
WILLIAM J. TRICARICO,
*Secretary.*

[FR Doc. 79-1770 Filed 1-17-79; 8:45 am]

[6712-01-M]

[47 CFR—Part 90]

[SS Docket No. 78-394; FCC 78-877]

## RADIO FREQUENCIES

### Changing the Method for Assigning Frequencies for Trunked Systems in the 806-821 MHz and 851-866 MHz Bands

AGENCY: Federal Communications Commission.

ACTION: Notice of proposed rulemaking.

SUMMARY: The Federal Communications Commission proposes to amend its regulations by adopting a new method for assigning radio frequencies in certain bands for trunked radio systems. It has been alleged that the present method of assigning frequencies for trunked systems may result in significant increase in system costs, in high levels of intermodulation interference, and perhaps more significantly, in severe reduction of system efficiency. The Commission, therefore, has studied alternative frequency assignment methodologies for trunked systems in this frequency band.

DATES: Comments must be received on or before February 7, 1979 and Reply Comments must be received on or before February 22, 1979.

ADDRESS: Federal Communications Commission, 1919 M Street, N.W., Washington, D.C. 20554.

FOR FURTHER INFORMATION CONTACT:

Neal Pike, Safety and Special Radio Services Bureau, (202) 632-6497.

Adopted: December 21, 1978.

Released: January 8, 1979.

By the Commission:

In the Matter of Amendment of § 90.365 (formerly 89.751) of the Commission's Rules to change the method for assigning frequencies for trunked systems in the 806-866 MHz bands.

1. The rules adopted by the Commission in Docket 18262 provide for the assignment of frequencies for trunked and for conventional radio systems in the 806-821 and 851-866 MHz bands sequentially; that is, assign the first assignable frequency followed by the next assignable frequency and proceed to the end of the band in a uniform 25 kHz channeling.[1] The rules also provide for the assignment of a minimum of five and a maximum of twenty contiguous channel pairs for the operation of trunked systems authorized in the Public Safety, Industrial, and Land Transportation Radio Services in the 806-822 and in the 851-866 MHz bands. However, in the development of trunked system designs and in applications for trunked system authorizations now on file, the question has been raised whether this frequency assignment method initially adopted for trunked systems should be changed.

2. It has been alleged that the present method of assigning frequencies for trunked systems may result in significant increase in system costs, in high levels of intermodulation interference, and perhaps more significantly, in severe reduction of system efficiency. The Commission, therefore, has studied alternative frequency assignment methodologies for trunked systems in this frequency band. A number of methods have been considered. Obviously, primary consideration was given to retaining the sequential assignment procedure now prescribed by the rules. However, for the reasons mentioned, we believe that some other method may be more appropriate. Thus, we have also considered the feasibility of a random, rather than sequential, frequency assignment approach. Under the random method, applicants would choose their frequencies from among the channels available in the 800 MHz bands on the basis of the most suitable frequencies for the particular system involved. However, this alternative was rejected basically because it would be difficult to administer; it provides little incentive to applicants to prevent or to reduce intermodulation interference by the use of interference suppressing techniques; and because, in general, it is inconsistent with the overall plan for 800-MHz under which frequencies are assigned by the Commission under a prearranged, standard assignment plan.

3. A second alternative studied is somewhat complex but does retain many of the advantages of sequential assignment procedures, while at the same time permitting system configurations which reduces the intermodulation problems and allows the use of more effective and efficient combining techniques. Under this method, the following assignment procedures would be adopted and included in Section 90.365 (formerly 89.751) of the Rules.

(a) Divide the 200 channels now allocated for trunked systems into ten, twenty-channel blocks with ten channel spacing between frequencies from block to block. Further, arrange each twenty-channel block into five-channel groups with forty channel spacings

[1] Section 90.365(a) (formerly 89.751(a)). See also *Land Mobile Radio Service, Second Report and Order*, Docket 18262, 46 FCC 2d 752 (1974).

between successive frequencies in each five-channel group. In addition, arrange these five-channel groups into four blocks with twenty-channel spacings and one, ten-channel spacing between five-channel groups. Offset successive twenty-channel blocks by one channel to form ten, twenty-channel groups. This arrangement is shown in Table 1, below.

TABLE 1.—*Proposed Channelization for Trunked Systems**

5 CHANNEL GROUPS

| | |
|---|---|
| 1-41-81-121-161<br>21-61-101-141-181<br>11-51-91-131-171<br>31-71-111-151-191 | 20-Channel Block 1 |
| 2-42-82-122-162<br>22-62-102-142-182<br>12-52-92-132-172<br>32-72-112-152-192 | 20-Channel Block 2 |
| 3-43-83-123-163<br>23-63-103-143-183<br>13-53-93-133-173<br>33-73-113-153-193 | 20-Channel Block 3 |
| 4-44-84-124-164<br>24-64-104-144-184<br>14-54-94-134-174<br>34-74-114-154-194 | 20-Channel Block 4 |
| 5-45-85-125-165<br>25-65-105-145-185<br>15-55-95-135-175<br>35-75-115-155-195 | 20-Channel Block 5 |
| 6-46-86-126-166<br>26-66-106-146-186<br>16-56-96-136-176<br>36-76-116-156-196 | 20-Channel Block 6 |
| 7-47-87-127-167<br>27-67-107-147-187<br>17-57-97-137-177<br>37-77-117-157-197 | 20-Channel Block 7 |
| 8-48-88-128-168<br>28-68-108-148-188<br>18-58-98-138-178<br>38-78-118-158-198 | 20-Channel Block 8 |
| 9-49-89-129-169<br>29-69-109-149-189<br>19-59-99-139-179<br>39-79-119-159-199 | 20-Channel Block 9 |
| 10-50-90-130-170<br>30-70-110-150-190<br>20-60-100-140-180<br>40-80-120-160-200 | 20-Channel Block 10 |

*In the Chicago Region, the table will be slightly different because some of the frequencies have already been assigned.

(b) Each applicant for twenty-channels will be assigned the next successive complete twenty-channel block.

(c) Five channel applicants will be assigned the next available five-channel group. Ten and fifteen channel applicants will be given the next two or three 5-channel groups provided they are within the same block.

(d) Frequencies for applicants for other than 5, 10, 15, or 20 channels will be selected by taking integral multiples of 5 channels within a twenty-channel group with the remaining channels (less than 5 channels) made up from the next five-channel group provided all channels are in the same twenty-channel group.

4. This assignment method provides significant separation between frequencies in one system. It also insures that intermodulation products generated by a given system will fall within that system, as well as on systems of later applicants and those out-of-band. This should assure that each licensee will have the incentive to take corrective measures to prevent intermodulation interference since his own system would be the first to be adversely affected. At the same time, this approach is a compromise derived from many possible formulations. We realize, therefore, that there could be other similar methodologies that achieve these objectives and we welcome comments with suggestions on any other reasonable methods.

5. Accordingly, Notice is hereby given for proposed rule making in the above-entitled matter. Any interested person may participate in this proceeding by filing comments by February 7, 1979, and reply comments by February 22, 1979. Comments and reply comments may be addressed to the issues and proposals set forth in this Notice and to such other issues as the participants believe are relevant and necessary to the resolution of these matters.

6. Authority for the proposed amendments is contained in Section 4(i) and 303 of the Communications Act of 1934, as amended. In accordance with Section 1.419 of the Commission's Rules, an original and five (5) copies of all comments, reply comments, and other pleadings and submissions shall be furnished to the Commission. All documents will be available for public inspection during regular hours in the Commission's Public Reference Room at its headquarters in Washington, D.C.

7. For further information on this document, you may contact Neal Pike, (202) 632-6497.

FEDERAL COMMUNICATIONS COMMISSION,
WILLIAM J. TRICARICO,
*Secretary.*

[FR Doc. 79-1509 Filed 1-17-79; 8:45 am]

---

[4910-59-M]

## DEPARTMENT OF TRANSPORTATION

National Highway Traffic Safety Administration

[49 CFR Part 531]

[Docket No. LVM 77-07; Notice 2]

## PASSENGER AUTOMOBILE AVERAGE FUEL ECONOMY STANDARDS

Officine Alfieri Maserati S.p.A.; Proposed Decision To Grant Exemption

AGENCY: National Highway Traffic Safety Administration, Department of Transportation.

ACTION: Proposed decision to grant exemption from average fuel economy standards.

SUMMARY: This notice is being issued in response to a petition by Officine Alfieri Maserati (Maserati) requesting that it be exempted from the generally applicable average fuel economy standard of 18.0 miles per gallon (mpg) for 1978 model year passenger automobiles and that a lower, alternative standard be established for it. This notice proposes that the requested exemption be granted and that an alternative standard of 12.6 mpg be established for Maserati.

DATE: Comment closing date: February 2, 1979.

ADDRESS: Comments on this notice must refer to Docket LVM 77-07 and should be submitted to: Docket Section, National Highway Traffic Safety Administration, Room 5108, 400 Seventh Street, SW., Washington, D.C. 20590.

FOR FURTHER INFORMATION CONTACT:

Douglas Pritchard, Office of Automotive Fuel Economy Standards, National Highway Traffic Safety Administration, Washington, D.C. 20590 (202-755-9384).

SUPPLEMENTARY INFORMATION: Section 502(c) of the Motor Vehicle Information and Cost Savings Act, as amended (the Act), provides that a low volume manufacturer of passenger automobiles may be exempted from the generally applicable average fuel economy standards for passenger automobiles if those standards are more stringent than the maximum feasible average fuel economy for that manufacturer and if the National Highway Traffic Safety Administration (NHTSA) establishes an alternative standard for the manufacturer at its maximum feasible level. Under the Act, a low volume manufacturer is one which manufactures less than 10,000 passenger automobiles worldwide in the model year for which the exemption is sought ("the affected model year") and which manufactured less than 10,000 passenger automobiles worldwide in the second model year before the affected model year. In determining maximum feasible average fuel economy, the agency is required by section 502(e) of the Act to consider:

(1) Technological feasibility;
(2) Economic practicability;
(3) The effect of other Federal motor vehicle standards on fuel economy; and
(4) The need of the Nation to conserve energy.

To implement section 502(c), NHTSA issued Part 525, Exemptions from average fuel economy standards (42 FR 39374; July 28, 1977). Part 525 prescribes the contents of exemption petitions and sets forth the procedures for processing those petitions. After

receipt of a complete petition, the agency publishes a notice of receipt which summarizes the petition and invites comments on it. Subsequently, the agency publishes a proposed decision to grant or deny the petition and provides a further opportunity for comment. Finally, the agency publishes a final decision to grant or deny the petition.

This agency issued a notice announcing the receipt of Maserati's petition for exemption from the generally applicable standards for the 1978-1980 model years (43 FR 46106; October 5, 1978). That notice summarized the Maserati petition and invited public comment on it.

Only one comment on the notice of receipt was submitted. That commenter urged that the petition be granted so that Maserati could remain in the U.S. market and asserted that the world will be a better place because of the continued existence of these automobiles.

*Requested alternative standard.* Maserati requested that its alternative standard for the 1978 model year be set at a level bwtween 11.3 and 11.5 mpg. This was based on the company's inability to exactly forecast what average fuel economy level the Environmental Protection Agency (EPA) would certify as its 1978 average fuel economy level. Since the time Maserati filed its petition for exemption, EPA has certified that company's 1978 average fuel economy level as 12.6 mpg. Accordingly, NHTSA has used 12.6 mpg as the base figure, and tentatively determined this proposed maximum feasible average fuel economy for Maserati by adding to this base all fuel economy improvements which are deemed feasible for the 1978 model year.

*Technological feasibility and economic practicability.* In considering whether Maserati could improve its average fuel economy for the 1978 model year, the agency examined the same methods for improving average fuel economy that it examined in establishing average fuel economy standards for model year 1981-1984 passenger automobiles (42 FR 33534; June 30, 1977) and for model year 1980-1981 light trucks (43 FR 11995; March 23, 1978). Those methods were weight reduction, aerodynamic improvements, engine efficiency improvements, engine accessory efficiency improvements, alternative engines, turbochargers, automatic transmission improvements, improved lubricants, reduced rolling resistance, engine displacement or drive ratio reductions, and mix shifts.

NHTSA's examination of these methods in this proceeding was significantly less detailed than in those earlier proceedings since there is no time now available for Maserati to make any changes to its 1978 automobiles. At this point, Maserati could not take any step which would increase its 1978 average fuel economy, so the agency tentatively concludes that running changes to improve the fuel economy of Maserati's 1978 model year automobiles are not technologically feasible and economically practicable.

*The effect of other Federal vehicle standards.* The other motor vehicle standards are important for the current model year only in determining whether those standards could be complied with in a more fuel efficient manner. Any fuel economy penalty which might be imposed by these standards, in the current model year would be reflected in the fuel economy of the 1978 Maseratis, and would have already been considered in the analysis of technological feasibility and economic practicability.

In determining whether the Federal Standards could be complied with in a more fuel efficient manner, the leadtime available to the manufacturer is a critical factor. In this case, Maserati has no leadtime available, so NHTSA concludes that no more fuel efficient means of compliance with the other Federal motor vehicle standards is available to Maserati for the 1978 model year.

*The need of the Nation to conserve energy.* The daily extra U.S. demand for petroleum that will result from Maserati achieving an average fuel economy level of 12.6 mpg rather than the generally applicable level of 18.0 mpg is estimated to average 8.4 barrels per day over the life of the 1978 Maseratis. To give perspective on this number, the fuel consumed by passenger automobiles in the United States is about 5 million barrels per day. For all purposes, the United States currently consumes about 17 million barrels of petroleum each day.

*Selection of the type of alternative standard.* The Act permits NHTSA to establish an alternative average fuel economy standard applicable to exempted manufacturers in one of three ways: (1) A separate standard may be established for each exempted manufacturer; (2) classes, based on design, size, price, or other factors, may be established for the automobiles of exempted manufacturers, with a separate average fuel economy standard applicable to each class; and (3) a single standard may be established for all exempted manufacturers. In the case of each manufacturer exempted thus far, the agency has used the first approach, that of establishing a separate standard for each exempted manufacturer. Since this approach has proven effective, the NHTSA will continue its use and by this notice, proposes a separate standard for Maserati.

*Proposed alternative standard.* Based on the agency's tentative conclusions stated above, the agency believes that the maximum feasible average fuel economy for Maserati for the 1978 model year is 12.6 mpg. Therefore, the agency proposes to exempt Maserati from the generally applicable standard of 18.0 mpg and to establish an alternative standard of 12.6 mpg for Maserati for the 1978 model year.

In consideration of the foregoing, it is proposed that 49 CFR Part 531 be amended by adding § 531.5(b)(7) reading as follows:

**§ 531.5 Fuel economy standards.**

* * * * *

(b) The following manufacturers shall comply with the standards indicated below for the specified model years:

* * * * *

(7) Officine Alfieri Maserati, S.p. A.

*Model year,* 1978.

*Average fuel economy standard (miles per gallon),* 12.6.

Persons are invited to submit comments on this proposed decision. Comments must be limited so as not to exceed 15 pages in length. Necessary attachments may be appended to these submissions without regard to the 15 page limit. This limitation is intended to encourage commenters to detail their primary arguments in a succinct and concise fashion.

NHTSA typically allows at least 45 days for the public to comment on its proposals. With respect to this proposal, however, the agency has shortened the comment period to 15 days. There are a number of reasons for taking this action. First, it is clear that Maserati cannot improve its average fuel economy for the 1978 model year. Further, the agency has indicated in its final decision on the Rolls-Royce petition for the 1978 model year (in this issue of the FEDERAL REGISTER) that it will not exercise its discretion at this time to establish alternative standards in excess of a manufacturer's maximum feasible average fuel economy. It appears to this agency that, given these circumstances, the preparation of comments on this proposal should be fairly simple. Second, the agency already provided a 30-day period to comment on the petition when the agency published its notice of receipt, and only one comment was received. Third, it is very desirable to have a final decision on the Maserati petition for the 1978 model year published as soon as possible.

All comments received before the close of business on the comment clos-

ing date indicated at the beginning of this proposal will be considered, and will be available for public inspection in the docket both before and after the comment closing date. To the extent possible, comments filed after the comment closing date will also be considered. The agency will continue to file relevant material in the docket as it becomes available after the comment closing date, and it is recommended that interested persons continue to examine the docket for new material.

The agency has reviewed the impacts of this proposal and determined that they are minimal and that the proposal is not a significant regulation within the meaning of Executive Order 12044.

The program official and attorney principally responsible for the development of this proposed regulation are Douglas Pritchard and Stephen Kratzke, respectively.

AUTHORITY: Sec. 9, Pub. L. 89-670, 80 Stat. 981 (49 U.S.C. 1657); sec. 301, Pub. L. 94-163, 89 Stat. 901 (15 U.S.C. 2002); delegation of authority at 41 FR 25015, June 22, 1976, and 43 FR 8515, March 2, 1978.

Issued on January 11, 1979.

MICHAEL M. FINKELSTEIN,
*Associate Administrator for Rulemaking.*

[FR Doc. 79-1809 Filed 1-17-79; 8:45 am]

---

[7035-01-M]

## INTERSTATE COMMERCE COMMISSION

[49 CFR Part 1001]

[Ex Parte Nos. 356, 360]

## INSPECTION OF RECORDS

### Regulations for the Processing of FOIA Requests and Confidentiality of Financial Data (General Policy Statement)

AGENCY: Interstate Commerce Commission.

ACTION: Consolidation of proceedings and change in date for filing comments.

SUMMARY: In a notice in Ex Parte No. 360, published December 8, 1978, at 43 FR 57625, and in a notice published in Ex Parte No. 356, published on December 11, 1978, at 43 FR 58001, the Commission asked for comments on whether proposed regulations or a policy statement on the disclosure of commercial data is warranted. These proceedings involve similar subject matter—the processing and consideration of requests for the disclosure of business data. In a decision served January 9, 1979 the two proceedings were consolidated. Comments in both proceedings are now due January 22, 1979.

DATE: Written comments are due January 22, 1979.

ADDRESSES: An original and 15 copies of any comments should be sent to: Secretary, Interstate Commerce Commission, 12th and Constitution Avenue N.W., Washington, D.C. 20423.

FOR FURTHER INFORMATION CONTACT:

Wayne M. Senville, Tel: (202) 275-1684.

H. G. HOMME, Jr.,
*Secretary.*

[FR Doc. 79-1769 Filed 1-17-79; 8:45 am]

---

[6560-01-M]

## ENVIRONMENTAL PROTECTION AGENCY

[40 CFR Part 52]

[FLR 1040-2]

### APPROVAL AND PROMULGATION OF IMPLEMENTATION PLANS

#### Revision to Texas Air Quality Surveillance Network

AGENCY: Environmental Protection Agency (EPA).

ACTION: Proposed rule.

SUMMARY: This rule proposes approval of a revision to the Texas Air Quality Surveillance Network. This revision involves the deletion of 4 particulate monitoring sites. These deletions will remove 4 hi-vol samplers from the Texas Air Quality Surveillance Network. The deletion of these hi-vol samplers was evaluated and the remaining network is considered an adequate SIP network.

DATE: Comments on the proposed approval should be submitted before February 20, 1979 in order to be considered by EPA in arriving at a final approval/disapproval decision.

ADDRESSES: Copies of the State's submittal are available for inspection during normal business hours at the following locations:

Environmental Protection Agency,
Region VI,
Air Program Branch,
1201 Elm Street,
Dallas, Texas 75270.

Environmental Protection Agency,
Public Information Reference Unit,
401 "M" Street, S.W., Room 2922,
Washington, D.C. 20460.

FOR FURTHER INFORMATION CONTACT:

Jerry Stubberfield, Air Program Branch, SIP Section, Region VI, Dallas, Texas 75270, (214) 767-2742.

SUPPLEMENTARY INFORMATION: The proposed revision was submitted by the Texas Air Control Board (TACB) on August 14, 1978. The table below lists the 4 sites to be deleted and a detailed discussion of the revision follows the table.

FOUR PARTICULATE MONITORING SITES

| Site No. | City | Sampler |
|---|---|---|
| 1. 066001 | Brownwood | Hi-Vol |
| 2. 261001 | Huntsville | Hi-Vol |
| 3. 131027 | Dallas | Hi-Vol |
| 4. 158003 | Eagle Pass | Hi-Vol |

Texas proposes the deletion of site 066001, designated site category Background (BG) by TACB, as this site is not representative of background air quality levels. Site 261001, designated site category Growth Areas (GA) by the TACB, has had an unacceptable data return, with no reasonable remedy projected. The location for the sampler at site 131027 is no longer available and as there are 8 other sites in Dallas designated site category Air Quality Surveillance (AQS) by the TACB, it is proposed this site be deleted. It is proposed site 158003 designated site category Air Quality Surveillance (AQS) by the TACB, be deleted as the location is not longer available.

This notice or proposed rulemaking is issued under the authority of section 110(a) of the Clean Air Act, as amended, 42 U.S.C. 7410-(a).

Dated: January 3, 1979.

EARL N. KARI,
*Acting Regional Administrator.*

It is proposed to amend Part 52 of Chapter 1, Title 40 of the Code of Federal Regulations as follows:

Subpart SS—Texas

1. In § 52.2270, paragraph (c) is amended by adding a new paragraph (16) as follows:

§ 52.2270 Identification of plan.

* * * * *

(c) * * *

(16) An administrative revision to Section IX, Air Quality Surveillance System, was submitted by the Texas Air Control Board on August 14, 1978. (Non-regulatory)

[FR Doc. 79-1888 Filed 1-17-79; 8:45 am]

[6560-01-M]

[40 CFR Part 180]

[FRL 1038-7; PP 7F1912/P100]

## TOLERANCES AND EXEMPTIONS FROM TOLERANCES FOR PESTICIDE CHEMICALS IN OR ON RAW AGRICULTURAL COMMODITIES

### Proposed Tolerance for the Pesticide Chemical 6-Benzyladenine

AGENCY: Office of Pesticide Programs, Environmental Protection Agency (EPA).

ACTION: Proposed rule.

SUMMARY: This notice proposes that a tolerance be established for residues of the plant growth regulator 6-benzyl adenine on apples. The proposal was submitted by Abbott Laboratories. This amendment would establish a maximum permissible level for residues of 6-benzyladenine on apples.

DATE: Comments must be received on or before February 20, 1979.

ADDRESS COMMENTS TO: Federal Register Section, Program Support Division (TS-757), Office of Pesticide Programs, EPA, Rm. 401, East Tower, 401 M St. SW, Washington DC 20460.

FOR FURTHER INFORMATION CONTACT:

Mr. Robert Taylor, Product Manager (PM) 25, Registration Division (TS-767), Office of Pesticide Programs, Environmental Protection Agency (202/755-7013).

SUPPLEMENTARY INFORMATION: On March 21, 1977, notice was given (42 FR 15361) that Abbott Laboratories, 14th Street and Sheridan Road, N. Chicago, IL 60064, had filed a petition (PP 7F1912) with the EPA. This petition proposed to amend 40 CFR Part 180 by establishing an exemption from the requirement of a tolerance for residues fo the plant growth regulator 6-benzyladenine (*N*-phenylmethyl)-1*H*-purine-6-amine) in or on the raw agricultural commodity apples. No comments were received in response to this notice of filing. Subsequently, the petitioner amended the petition by proposing the establishment of a tolerance of 0.15 part per million (ppm) for residues of 6-benzyl adenine in or on apples. Because of the potential increase in exposure to humans to 6-benzyladenine residues as a result of the 0.15 ppm tolerance, the tolerance is being proposed at this time to provide an opportunity for public comment.

The data submitted in the petition and other relevant material have been evaluated. The toxicological data considered in support of the proposed tolerance included a rat oral acute toxicity study with a lethal dose ($LD_{50}$) of 1.3 grams (g)/kilogram (kg) of body weight (bw), a 90-day rat feeding study with a no-observable-effect level (NOEL) of less than 500 ppm, a 90-day dog feeding study with an NOEL in excess of 1,500 ppm, a one-generation rat reproduction study with no adverse effects, and metabolism studies. Although the above studies were taken into consideration, the chief considerations in establishing the 0.15 ppm tolerance were: (1) The subject pesticide is naturally found in apples, (2) The natural residues of this pesticide will not be changed by the establishment of the 0.15 ppm tolerance, and (3) since the residue level will not be increased, the risk to the consumer of apples will not be increased. Since there is no discrenible difference in the 6-benzyladenine levels in treated vs. control samples, there will be no problem with respect to secondary residues in eggs, meat, milk, or poultry.

Since the levels of the compound are the same on both sprayed and unsprayed apples, consideration of the acceptable daily intake (ADI) and the maximum permissible intake (MPI) are not relevant to this petition. The metabolism of 6-benzyladenine is adequately understood, and an adequate analytical method (gas-liquid chromatography using electron capture detection) is available for enforcement purposes. No regulatory actions are pending against the continued registration of the pesticide, nor are desirable data lacking to support the 0.15 ppm tolerance, nor are any other considerations involved in establishing the tolerance.

The pesticide is considered useful for the purpose for which a tolerance is sought, and it is concluded that the tolerance of 0.15 ppm on apples established by amending 40 CFR Part 180 will protect the public health. It is proposed, therefore, that the tolerance be established as set forth below.

Any person who has registered or submitted an application for the registration of a pesticide, under the Federal Insecticide, Fungicide, and Rodenticide Act, which contains any of the ingredients listed herein, may request on or before February 20, 1979, that this rulemaking proposal be referred to an advisory committee in accordance with section 408(e) of the Federal Food, Drug, and Cosmetic Act.

Interested persons are invited to submit written comments on the proposed regulation. The comments must bear a notation indicating both the subject and the petition/document control number, "PP 7F1912/P100". All written comments filed in response to this notice of proposed rulemaking will be available for public inspection in the office of the Federal Register Section from 8:30 a.m. to 4 p.m. Monday through Friday.

Dated: January 11, 1979.

DOUGLAS D. CAMPT,
*Acting Director,*
*Registration Division.*

(Sec. 408(e), Federal Food, Drug, and Cosmetic Act (21 U.S.C. 346a(e)))

It is proposed that Part 180, Subpart C, be amended by adding the new § 180.376 to read as follows:

§ 180.376 6-Benzyladenine; tolerances for residues.

A tolerance is established for residues of the plant growth regulator 6-benzyladenine (*N*-(phenylmethyl)-1*H*-purine-6-amine) in or on the following raw agricultural commodity:

| | Parts per million |
|---|---|
| Commodity: | |
| Apples | 0.15 |

[FR Doc. 79-1711 Filed 1-17-79; 8:45 am]

---

[6560-01-M]

[40 CFR Part 52]

[FRL 1041-2]

## AIR POLLUTION CONTROL; RECOMMENDATION FOR ALTERNATIVE EMISSION REDUCTION OPTIONS WITHIN STATE IMPLEMENTATION PLANS

AGENCY: Environmental Protection Agency.

ACTION: Proposed policy statement.

SUMMARY: The Policy Statement set forth below encourages states to extend to facilities, subject to State Implementation Plans, the option for use of alternative emission reduction controls, and to be receptive to proposals from facilities seeking to employ the more economically efficient mix of controls allowed by the policy. This alternative emission control approach, commonly referred to as the "bubble" concept, enables states to revise their plans to permit facilities to place a greater burden of control on sources where the marginal cost of control is low, and a lesser burden where cost is high.

COMMENT PERIOD: March 19, 1979.

ADDRESS: Submit comments and direct inquiries to: Barbara Ingle, U.S. Environmental Protection Agency, Office of Planning and Evaluation (PM-220), 401 M Street, S.W., Room 3009, Washington, D.C. 20460, Telephone: (202) 755-2811.

FOR FURTHER INFORMATION CONTACT:

Inquiries may also be directed to: Edward Reich, Office of Enforce-

ment (EN-340), U.S. Environmental Protection Agency, 401 M Street, S.W., Room 1111, Washington, D.C. 20460, Telephone: (202) 755-2550.

Kent Berry, Office of Air Quality Planning and Standards (MD-11), U.S. Environmental Protection Agency, Research Triangle Park, North Carolina 27711, Telephone: (919) 629-5431.

SUPPLEMENTARY INFORMATION: The text of the proposed Policy Statement is set forth below. We invite comments on all aspects of the issues it raises.

In addition, we are explicitly requesting comments on the resource burden that final adoption of such an approach might place on state air pollution control agencies to evaluate and rule on alternative emission reduction applications. We are aware that these agencies have limited staffs, and that the requirements of the new Clean Air Act are placing heavy burdens on them. Therefore, we would like to hear views on whether the further resource burdens arsing from this policy are sufficiently large as to outweigh the corresponding benefits.

PROPOSED POLICY STATEMENT ON ALTERNATIVE EMISSION REDUCTION OPTIONS WITHIN STATE IMPLEMENTATION PLANS

INTRODUCTION

State Implementation Plans (SIPs) and facility specific compliance schedules are the regulatory vehicles designated by the Clean Air Act to be used for attaining and maintaining air quality standards.

The Clean Air Act requires that states adopt implementation plans to attain and maintain ambient air quality standards as expeditiously as practicable, but no later than by dates set forth in the statute. In developing these plans states adopt regulations setting forth emission limits which, when applied to sources contributing to the ambient air problem, are calculated to assure that standards are attained. In making these decisions states regularly take into account the nature and amount of emissions from each source, the control technology available and the time required for its installation. However, SIPs are not necessarily as economically efficient as possible, nor are regulated companies prompted to seek innovations in control technology.

For this reason, the Environmental Protection Agency is proposing this policy to allow plants to reduce control where costs are high in exchange for an equal increase in control where abatement is less expensive. We strongly recommend that the states inform facilities of the availability of the alternative emission reduction approach, explain the advantages and conditions to use, and be receptive to proposals from facilities seeking to employ the more cost-effective mix of controls this policy allows.

Under the new policy, facilities may obtain financial savings by employing more cost-effective mixes of control techniques than current process-by-process regulations allow, as long as total environmental benefits are not reduced. Properly applied, the alternative approach should promote greater economic efficiency and increased technological innovation.

The possible financial savings of the alternative approach will provide an economic incentive to plant managers to develop innovative control strategies. This is one of our few opportunities to provide positive incentives for innovation, and the new control strategies developed in response to the program could be used as a basis for setting tighter standards in the future.

It is very important to ensure that use of the alternative approach will not obstruct progress toward air quality objectives by permitting degradation of air quality, weakening enforcement, or providing an opportunity for delaying compliance. To avoid these problems, the use of the alternative approach is carefully conditioned as described in detail in the body of this statement. The proposed policy is intended, and should be interpreted, as an alternative means to expeditious compliance with the SIP's reqirements, not as a way to avoid or delay compliance with the SIP or any other requirements of the Clean Air Act nor as a way to avoid, delay, or reduce the sanctions flowing from previous or future noncompliance.

In this statement I am urging states to extend this option to eligible sources and be receptive to proposed alternative emission reduction applications whenever they are drawing up or revising SIPs. Under the Clean Air Act, EPA may, in certain cases, draw up or revise SIPs and in those cases we will advise eligible sources and be receptive to such applications too, where it would be appropriate [1] to do so.

The following discussion describes the alternative emission reduction approach and how it will be implemented, and discusses concerns which lead to conditions in its use.

THE ALTERNATIVE EMISSION REDUCTION CONCEPT

A. *What is the Concept?* The primary tests to which EPA subjects State Implementation Plans are: Do its provisions assure the attainment and maintenance of ambient air quality standards as expeditiously as practicable? And, are its provisions enforceable? The Agency has had no stated policy on the degree of which individual sources of air pollution within an industrial site should be controlled, if the pattern of control adopted meets those requirements.

Under the alternative emissions reduction concept, a facility with multiple process-related emission sources, (stacks, vents, ports, etc.) each of which is subject to specific emission limitation requirements under an approved SIP, may propose to meet the total emission control requirements of the SIP for a given pollutant through a different mix of controls than that mandated by the existing or proposed regulations.

Facilities would have the opportunity to come forward with alternative abatement strategies that would place relatively more control on sources with a low marginal cost of control, and less on sources with a high cost, achieving the same amount of emission reduction for less cost.

EPA has already issued guidance approving use of the alternative approach in some cases for control of hydrocarbon emissions. (See July 3, 1978 memorandum from David Hawkins on "Internal Offsets for RACT Categories".) The concept is generally similar to the offset policy, except that, to avoid overburdening the program, the alternative approach outlined here is restricted to use only within a single plant.

B. *How will the alternative emission reduction approach be implemented?* It is the regulatee's responsibility to come forward with the alternative control approach. The regulatee also has the burden to demonstrate satisfactorily that the proposal is equivalent in pollution reduction, enforceabil- ity, and environmental impact to existing individual process standards. In this way the resource demands on control agencies are primarily limited to deciding what kind of demonstration is required and reviewing the results.

The implementation will differ depending on whether the alternative approach is being applied to existing SIP requirements or new ones.[2] Where existing SIP requirements are concerned, overall emissions limits and compliance deadlines are known. Once a plant comes forward with a promising alternative proposal that seems to achieve the goals of the current com-

[1] Under the Clean Air Act EPA cannot relax any air pollution control regulations which a State has adopted and, of course, EPA's own use of the alternative emission reduction policy would be subject to that condition too.

[2] Plants which are neither in compliance nor on an EPA approved schedule (including EPA agreement as to penalty issues and other sanctions) nor in compliance with an acceptable court decree are not eligible to use this approach (see discussion in Section 2(a).)

pliance schedule, then the control agency must decide upon a test to verify the equivalency of the proposed trade. If the source is able to present sufficient evidence, and the control agency agrees, then a provision would be drawn up as an addition to the existing SIP requirement, which will continue to be on the books. All proposals must be approved by EPA.

Sources may propose an alternative for existing SIP requirements at any time, though it is clearly to the plant's advantage to do so as early as possible. This is because until equivalency tests have been conducted and the alternative approach is approved the plant will be expected to meet the requirements of the existing schedule on time. In some cases this could mean that a plant would have to make a pollution control investment that would not have to be made under the alternative approach. By presenting alternative proposals as early as possible (preferably during the engineering and design period that is provided at the beginning of most compliance schedules), plants can avoid any such conflicting investments.

When a State is revising a SIP, plants may, in anticipation of overall emissions limit, or in response to limits being proposed, present a counterproposal. The plant would then have to show that its alternative mix of controls would be environmentally equivalent to the process-specific standards. If the demonstration is successful, the counter-proposal can be adopted as part of the SIP.

The S02 regulation for the Stuart Power Plant of the Dayton Power and Light Company in Ohio provides an example of how the alternative emission reduction approach can be used. This SIP regulation contains an alternative set of limitations which the company may use in lieu of a uniform limitation at each of the four boiler stacks at its power generating plant. The plant still must meet specific limitations at its individual stacks, but these limitations are set using an equation that makes the overall emissions under the emission reduction alternative equal to the amount permitted under the uniform emissions limit. This flexibility will allow the power plant to apply the least-cost mix of scrubbing, low-sulfur coal and/or cleaning controls among the facility's four boilers. In this case a demonstration has been made that differences in emissions from each of the stack sources will not result in overall differences in ambient air quality attainment or maintenance.

Another situation where this approach can be applied is to different stages of a plant's production process which emit the same kind of pollutant. For example, painting and degreasing operations of an automobile paint shop are both sources of hydrocarbon emissions. A plant may want to apply greater control to the degreasing process in order to reduce the amount of required control of the painting operations. This will enable the plant to achieve the same overall emissions standard at a lower cost since it can avoid such expensive measures as reformulating paints and installing new spraying equipment.

C. *Conditions on Use of the Alternative Approach.* States that apply the alternative approach must make sure that the basic goal of achieving the air quality standards on time is not compromised, and that SIPs with alternative provisions are just as enforceable and are enforced as promptly as those without them. Certain conditions on use of the alternative approach are necessary for this. EPA will disapprove any alternative SIP that does not satisfy these conditions.

1. *Air Quality Considerations.* a. *Air quality standards must be met.* The overriding command of the statute is to attain and maintain ambient air quality standards. Many States are required to submit revised SIP's (due January 1979) because existing regulations are not sufficient to meet this basic condition of the Act. In those areas where states submit revised plans which are not adequate to achieve the future statutory deadlines contained in the new Clean Air Act, the alternative approach will not be allowed for the pollutant in question. Under these conditions, control of all sources with reasonably available control measures, done without trading one against the other, will be needed to meet the statutory requirements.[3]

In addition, states must also disapprove proposals where controlling one source less and another source more might violate a basic condition of attainment even where source total emissions do not increase. For example, particulates emitted from a stack would have a totally different and more harmful impact upon ambient air quality than road dust stirred up by trucks within the plant site.

EPA will insist on a demonstration that any SIP employing alternative emission reduction approaches will result in attainment and maintenance of standards. The more different the types of sources included under the new approach, the more detailed the demonstration will have to be. In other words, two industrial sources of the same nature (e.g. steam boilers) would have to make a less detailed showing of equality for the alternative approach than would a stack source combined with fugitive emission source.

The treatment of certain low-emitting processes deserves special mention in this regard. Some existing sources may be emitting less than existing SIP regulations would allow, for example, because they are burning a clean fuel like natural gas. In such cases the current SIP often assumes, as part of its demonstration of attainment, that these emissions will not be increased above current levels even though this increase is not explicitly forbidden by a SIP regulation. Whenever this assumption has been made, the difference between such a low-emitting source's actual emissions and the emissions the SIP might theoretically allow may be, in effect, unavailable to offset any proposed higher emissions from another source under this policy since the low-emitting process is already being relied on to attain ambient air quality standards. Therefore, in any case where the difference between actual and allowable emission levels for such low-emitting sources is proposed to be used to offset higher emission levels for other sources, the alternative emission reduction proposal must include an explicit demonstration that the total actual emissions resulting from such an approach will not interfere with the attainment and maintenance of air quality standards.

All demonstrations should be initiated and paid for by the source.

b. *Emissions under the alternative approach must all be quantifiable and trades among them must be even.* A facility that wishes to control one source less in exchange for controlling another source more must demonstrate that the trade will in fact be even—that the lesser emissions at the first source will at least offset the greater emissions at the second and that emissions from the two sources have a similar impact on ambient air quality. This can only be done if the emissions from both sources (and increases and decreases in them) can be acceptably quantified and related to ambient air quality considerations.

This condition applies with particular force where "fugitive" emissions are concerned. These emissions are much more difficult to quantify than stack emissions. EPA will insist on an adequate demonstration that emissions can be quantified and that any trades being made are in fact even and do not result in a worsening of overall ambient air quality.

c. *The pollutants under the alternative proposal must be comparable.*

[3] In addition, under the Clean Air Act new or modified sources of air pollution are subject to various requirements to apply "best available control technology", to attain a "lowest achievable emission rate", or to meet "new source performance standards". These requirements raise different legal and practical problems from SIPs generally, and in these cases sources may only use substitute provisions as specific EPA guidance or regulations allow.

Clearly, trade offs cannot be applied across pollutants, e.g., to trade S02 against hydrocarbons. And even within the categories, those with different health or ambient air impacts cannot be traded against each other. For example:

i. Coke oven particulate emissions and other proven carcinogens should not be traded against paticulate emissions from any other source. (EPA plans to designate coke ovens emissions as hazardous emissions under section 112 of the Clean Air Act and there is no prospect that control requirements for coke ovens could be eased for long by such trades.)

ii. Some hydrocarbon emissions, such as benzene where EPA has made a determination as to their hazardous nature, cannot be traded against other hydrocarbon emissions.

iii. Emissions from open dust sources like roads and storage piles may not be traded against emissions from stacks or against fugitive emissions from industrial processes. The latter contain far more intensive concentrations of fine particulates, which disperse more widely in the air than coarse particulates, stay in the air longer, and penetrate more deeply into the lungs. Moreover, there is sufficient evidence that open dust sources do not contribute significantly to ambient concentrations. For example, violations of the 24 hour particulate standard are frequently observed under conditions of atmospheric inversions. In these situations the accompanying low wind speeds are insufficient to disturb open dust sources.

The problems of determining emission rates from these open dust sources, modeling their impact on ambient air quality in concert with process emission sources, and assuring that all actual and potential ambient air quality standard violations are protected against, are sufficiently complex to effectively preclude acceptable demonstrations of equivalency of controls.

2. *Enforcement Considerations.* The alternative emissions reduction policy, if improperly carried out, could be a source of delay in compliance and an impediment to effective enforcement. It is therefore carefully conditioned, as described below, to avoid creation of any additional grounds for legal challenges to present or revised SIPs, delays in enforcement, or any weakening of the enforceability or sanctions (e.g., penalties) of SIP requirements.

a. *Existing SIPs provisions must not be replaced.* Under the Clean Air Act, potential litigants have sixty days after a SIP is promulgated to challenge it in court. For almost all existing SIPs, that litigation has long since run its course, and the SIP is enforceable and is being enforced. If states rewrite existing SIPs to incorporate the alternative approach, these new provisions might reopen litigation opportunities and lead to long delays before new provisions are enforceable. To make sure there is still an enforceable SIP pending compliance, all alternative emission reduction provisions of the new SIP must be submitted as alternatives or additions to the existing SIP, not as replacements for it. That way the existing SIP can still be enforced even if the new one is not approved or is otherwise held up.

b. *Each emission point must have a specific emission limit and that limit must be tied to enforceable testing techniques.* In order for an alternative emission reduction proposal to be enforceable specific limitations on each source must be imposed. Apart from other difficulties, a SIP without specific limitations would be effectively unenforceable in most cases since continuous monitoring of a number of different sources would be required to make sure the total allocation was not exceeded. Accordingly, EPA will approve alternative proposals only if they contain a specific emissions limit on each regulated source that is inforceable. Of course, each limit must have an enforceable testing requirement associated with it. In general, the new requirements must be at least as enforceable as the existing requirements.

c. *Non-complying sources should not be free to submit alternative emission reduction proposals.* Facilities that have successfully deferred compliance with existing SIP requirements, including compliance schedules, may be tempted to use the possibility that an alternative might be drafted to further delay compliance. They would argue that any steps toward compliance should be further delayed until the possibilities of this new approach have been fully explored.

If this argument were allowed to succeed, it would only continue unlawful pollution and increase the present inequity between sources that have incurred the expense and difficulty of compliance and those that have deferred it so far. Accordingly, applications should be restricted to facilities which are:

i. In compliance;

ii. Not in compliance, but meeting an EPA approved compliance schedule (including EPA agreed to resolution of penalties issues and other sanctions); or

iii. Subject to court decree: (1) in an action in which EPA was a party or which decree EPA has found to be satisfactory, (2) which decree includes schedules for compliance, and (3) which decree recognizes the possibility of SIP revision and allows for timely modification of the decree without delay in the final compliance date.

To be acceptable, any compliance schedule under ii and any decree under iii must set out a timetable to which the source has agreed (i.e., is not appealing or otherwise contesting) to expeditious compliance with the overall emissions limits under the *existing* SIP, and which provides for a resolution of penalties issues and other sanctions.[4]

d. *Existing compliance dates must not be extended.* In some cases, SIP requirements that took effect several years ago have not yet been complied with. States are free if they wish, subject to the conditions in this statement, to apply the alternative approach to these requirements as well. However, that revision should not have the effect of relieving noncomplying sources of the consequences of their noncompliance. Under no circumstances can the proposal be used to delay or defer compliance deadlines. To accomplish this, any such new requirement should have the same SIP compliance deadline as the existing requirement to which it is an alternative. And, if the new requirement allows the use of alternatives which can be adopted more quickly than those included in the existing compliance schedule, then the states should consider establishing earlier compliance dates.

Whichever method of compliance the source elects—the old or the new—penalties will be assessed and collected from the same date, namely the date by which the original requirement should have been met. Until the alternative proposal is approved, all noncompliance penalties under authority of Sections 113 or 120 of the Clean Air Act or equivalent state provisions will be based on the pre-alternative proposal definition of cost. For that part of the period which follows the date of approval of the alternative proposal, the basis for estimating noncompliance penalties should be changed to the cost that would have been incurred by the facility assuming it had complied with the alternative emissions reduction approach on the date of approval.

Sources for which alternative emission reduction proposals are accepted by EPA for consideration, or built into a decree must agree in writing not to seek stays of compliance with the existing requirement or any avoidance of sanctions (e.g., penalties) if the alternative proposal is disapproved, challenged, or otherwise delayed or not made effective.

e. *There will be no delay of existing enforcement actions.* As discussed

[4] It is EPA's policy not to approve compliance schedules for existing requirements which extend beyond December 31, 1982.

above, non-complying sources must not be allowed to further delay compliance due to the pendency of possible alternative requirements under the alternative approach. Therefore, states should continue to pursue enforcement actions and seek compliance with the requirements of the existing SIP as expeditiously as practicable.

Where completely new SIP provisions are concerned, of course by definition there are as yet no non-complying sources, and parts (c), (d), and (e) above do not apply.

CONCLUSION

EPA believes that the alternative emission reduction approach, properly applied, will be of significant benefit to the states, to EPA, and to industry. We therefore encourage states to review carefully the policy and inform facilities of the options, explain the advantages and conditions of use and be receptive to industry proposals.

Dated: January 16, 1979.

DOUGLAS M. COSTLE,
*Administrator.*

[FR Doc. 79-2087 Filed 1-17-79; 9:49 am]

# notices

This section of the FEDERAL REGISTER contains documents other than rules or proposed rules that are applicable to the public. Notices of hearings and investigations, committee meetings, agency decisions and rulings, delegations of authority, filing of petitions and applications and agency statements of organization and functions are examples of documents appearing in this section.

[3410-11-M]

## DEPARTMENT OF AGRICULTURE

### Forest Service

### DESCHUTES NATIONAL FOREST, DESCHUTES, KLAMATH, JEFFERSON, AND LAKE COUNTIES, OREG.; FOREST PLAN

#### Intent To Prepare an Environmental Statement

Pursuant to section 102(2)(c) of the National Environmental Policy Act of 1969, and the Forest and Rangeland Renewable Resources Planning Act of 1974, as amended by the National Forest Management Act of 1976, the Deschutes National Forest intends to prepare and file an Environmental Statement on a Forest Plan.

The Plan will be prepared according to regulations being promulgated by the Secretary of Agriculture. The regulations will implement section 6 of the National Forest Management Act of 1976.

The Plan will be sensitive to public issues. Public workshops are being conducted and written comments are being solicited to help the Forest identify public issues. The Plan will be coordinated with local, county, State, and other Federal agencies.

The official responsible for preparing the Forest Plan Environmental Statement is Earl E. Nichols, Forest Supervisor, Deschutes National Forest. The official responsible for approving the Forest Plan Environmental Statement is Richard E. Worthington, Regional Forester, Pacific Northwest Region, Portland, Oregon.

The Draft Environmental Statement is scheduled for completion by January 1980. A 3-month review period of the Draft Environmental Statement is planned. The Final Environmental Statement is scheduled for filing by September 1980.

Comments on the Notice of Intent or on the planning project should be sent to Earl E. Nichols, Forest Supervisor, Deschutes National Forest, 211 N. E. Revere, Bend, Oregon 97701.

Dated: January 9, 1979.

R. E. WORTHINGTON,
*Regional Forester.*

[FR Doc. 79-1744 Filed 1-17-79; 8:45 am]

[3410-11-M]

### GIFFORD PINCHOT NATIONAL FOREST; DRY CREEK I PRECOMMERCIAL THINNING PROJECT

#### Determination

An Environmental Assessment Report that discusses the proposed precommercial thinning project by stem injection using Tordon 101 Weed and Brush Killer, on no more than 363 acres of National Forest lands in Section 1, T.5N., R.6E., W.M., and Sections 6, 7, 8, 17 and 20, T.5N., R.7E., W.M., on the Wind River Ranger District in Skamania County, Washington, is available for public review in the Gifford Pinchot National Forest Supervisor's Office.

These projects consist of six (6) thinning areas (units). Two (2) units are north of Dry Creek on National Forest Road Number N614 and four (4) units are between Big Hollow Creek and Dry Creek on National Forest Road Number N558. The Environmental Assessment Report does not indicate that there will be any significant effects on the quality of the human environment. Therefore, it has been determined that an Environmental Statement will not be prepared.

This determination was based upon consideration of the following factors which are discussed in detail in the Environmental Assessment Report: (a) No irreversible or irretrievable effects on the environment; (b) No apparent adverse cumulative or secondary effects; (c) Physical and biological effects limited to the area of plant treatment; (d) No known threatened or endangered species of plants, animals or birds have been recorded or observed in any proposed treatment area.

Some problems exist over the slash hazard that may result. Since slash hazards from chemical thinning are unknown, fuel breaks will be established in the project area. Permanent photoplots will also be established so that the data from this project will be on record. Annual data will be taken for future project use.

No action will be taken prior to thirty (30) days from the date of publication in the FEDERAL REGISTER.

The responsible official is Robert D. Tokarczyk, Forest Supervisor, Gifford Pinchot National Forest, 500 West 12th Street, Vancouver, Washington 98660.

Dated January 8, 1979.

ROBERT D. TOKARCZYK,
*Forest Supervisor.*

[FR Doc. 79-1745 Filed 1-17-79; 8:45 am]

[3410-11-M]

### OLYMPIC NATIONAL FOREST, CLALLAM, JEFFERSON, GRAYS HARBOR AND MASON COUNTIES, WASHINGTON; OLYMPIC FOREST PLAN

#### Intent to Prepare an Environmental Statement

Pursuant to section 102(2)(c) of the National Environmental Policy Act of 1969, the Forest Service, Department of Agriculture will prepare an Environmental Statement on a comprehensive land and resource plan for the Olympic National Forest.

Subunit plans for the Soleduck and Quinault Ranger Districts have been prepared and implemented. The Hoodsport and Quilcene Ranger District and Satsop Block plans are in process. The Hoodsport and Quilcene Districts were incorporated into a single plan entitled Canal Front Plan. Other resource plans covering specific resources have been developed prior to this effort. The Ten Year Timber Management Plan for the Shelton Ranger District is complete.

The Plan will provide management direction for all lands and resources in the Olympic National Forest. Existing plans may be modified.

The Forest Plan will be developed in accordance with direction for land and resource planning developed pursuant to the National Forest Management Act of 1976.

Issues, concerns and opportunities have not yet been identified but are expected to include the effect of timber harvest on long term soil productivity and stability, fisheries and esthetics. Full identification of issues will be accomplished through public involvement.

Richard E. Worthington, Regional Forester, Pacific Northwest Region, is the responsible official and Paul G. Schaufler, Forester, will be the team leader for Environmental Assessment and Statement.

It is anticipated that the environmental assessment will require about three years.

The Draft Environmental Statement is scheduled to be filed in December 1981.

Comments on the Notice of Intent or the Forest Plan should be sent to Richard D. Boaubein, Forest Supervisor, Olympic National Forest, P.O. Box 2288, Olympia, Washington 98507.

JANUARY 10, 1979.

R. E. WORTHINGTON,
*Regional Forester.*

[FR Doc. 79-1746 Filed 1-17-79; 8:45 am]

---

[3410-05-M]

**Office of the Secretary**

**ADVISORY COMMITTEE ON EXPORT SALES REPORTING**

**Meeting Cancellation**

Notice is hereby given pursuant to Pub. L. 92-463, that the meeting of the Advisory Committee on Export Sales Reporting scheduled to be held on January 17, 1979, as stated in 43 FR 59408 is cancelled. As announced in 43 FR 59408, the Committee's next meeting is scheduled for January 31, 1979 from 9:00 a.m. to 4:00 p.m., in room 218-A, Administration Building, U.S. Department of Agriculture, 1400 Independence Avenue, S.W., Washington, D.C. 20250.

Dated: January 15, 1979.

KELLY HARRISON,
*General Sales Manager and Executive Secretary, Advisory Committee on Export Sales Reporting.*

[FR Doc. 79-1784 Filed 1-17-79; 8:45 am]

---

[6820-32-M]

## ARMS CONTROL AND DISARMAMENT AGENCY

**GENERAL ADVISORY COMMITTEE**

**Meeting**

Notice is hereby given in accordance with section 10(a)(2) of the Federal Advisory Committee Act, 5 U.S.C. App. I, (the Act) and paragraph 8b of Office of Management and Budget Circular No. A-63 (Revised March 27, 1974) (the OMB Circular), that a meeting of the General Advisory Committee (GAC) is scheduled to be held on February 8, 1979 from 9 a.m. to 6 p.m. and on February 9, 1979 from 9 a.m. to 6 p.m. at 2201 C Street, NW., Washington, D.C., in Room 7516.

The purpose of the meeting is for the GAC to receive briefings and hold discussions concerning arms control and related issues which will involve national security matters classified in accordance with Executive Order 12065, dated June 28, 1978.

The meeting will be closed to the public in accordance with the determination of January 8, 1979 made by the Director of the U.S. Arms Control and Disarmament Agency pursuant to section 10(d) of the Act and paragraph 8d(2) of the OMB Circular that the meeting will be concerned with matters of the type described in 5 U.S.C. 552(b)(1). This determination was made pursuant to a delegation of authority from the Office of Management and Budget dated June 25, 1973 issued under the authority of Executive Order 11769 dated February 21, 1974.

Dated: January 10, 1979.

SIDNEY D. ANDERSON,
*Advisory Committee, Management Officer.*

[FR Doc. 79-1783 Filed 1-17-79; 8:45 am]

---

[6320-01-M]

## CIVIL AERONAUTICS BOARD

[Docket 33091]

**FLORIDA SERVICE CASE**

**Hearing**

Notice is hereby given, pursuant to the provisions of the Federal Aviation Act of 1958, as amended, that a hearing will be held on February 21, 1979 at 10:00 a.m. (local time) at the Leon Room, Host International Hotel, Tampa International Airport, Tampa, Florida.

At the conclusion of the hearing schedule in Tampa, the hearing will be recessed until February 28, 1979 at 10:00 a.m. (local time) in the Mobile Municipal Auditorium, 401 Auditorium Drive, Mobile, Alabama.

For details of the issues involved in this proceeding, interested persons are referred to the Prehearing Conference Report, served October 23, 1978, and other documents which are in the docket of this proceeding on file in the Docket Section of the Civil Aeronautics Board.

Dated at Washington, D.C., January 12, 1979.

WILLIAM H. DAPPER,
*Administrative Law Judge.*

[FR Doc. 79-1877 Filed 1-17-79; 8:45 am]

---

[3510-22-M]

## DEPARTMENT OF COMMERCE

**National Oceanic and Atmospheric Administration**

**GULF OF MEXICO FISHERY MANAGEMENT COUNCIL, SPINY LOBSTER ADVISORY SUBPANEL**

**Public Meeting**

AGENCY: National Marine Fisheries Service, NOAA.

SUMMARY: The Gulf of Mexico Fishery Management Council was established by Section 302 of the Fishery Conservation and Management Act of 1976 (Pub. L. 94-265), and the Council has established an Advisory Subpanel on Spiny Lobsters. This panel will meet to review a draft fishery management plan.

DATES: The meeting will convene on Monday, February 12, 1979, at 10:00 a.m., adjourning at 5:00 p.m. and on Tuesday, February 13, 1979, at 8:30 a.m. and adjourning at 3:00 p.m. This meeting is open to the public.

ADDRESS: The meeting will take place in the Tampa Room of the Barclay Best Western Inn, 5303 West Kennedy Boulevard, Tampa, Florida.

FOR FURTHER INFORMATION CONTACT:

Wayne Swingle, Executive Director, Gulf of Mexico Fishery Management Council, Lincoln Center, Suite 881, 5401 West Kennedy Boulevard, Tampa, Florida 33609, Telephone: (813) 228-2815.

Dated: January 15, 1979.

WINFRED H. MEIBOHM,
*Acting Executive Director, National Marine Fisheries Service.*

[FR Doc. 79-1721 Filed 1-17-79; 8:45 am]

---

[3510-22-M]

**MARINE MAMMALS**

**Receipt of Application for General Permit**

Notice is hereby given that the following application has been received to take marine mammals incidental to the course of commercial fishing operations within the U.S. Fishery Conservation Zone, as authorized by the Marine Mammal Protection Act of 1972 (16 U.S.C. 1361-1407) and the regulations thereunder.

Sovrybflot, Moscow, U.S.S.R. has applied for a Category 1: "Towed or Dragged Gear" general permit.

The application is available for review in the office of the Assistant Administrator for Fisheries, National Marine Fisheries Service, Washington, D.C. 20235.

Interested parties may submit written views on this application within 30 days of the date of this notice to the Assistant Administrator for Fisheries, National Marine Fisheries Service, Department of Commerce, Washington, D.C. 20235.

Dated: January 12, 1979.

WINFRED H. MEIBOHM,
*Acting Executive Director, National Marine Fisheries Service.*

[FR Doc. 79-1722 Filed 1-17-79; 8:45 am]

---

[3510-04-M]

National Technical Information Service

## GOVERNMENT-OWNED INVENTIONS

### Availability for Licensing

The inventions listed below are owned by the U.S. Government and are available for domestic and possibly foreign licensing in accordance with the licensing policies of the agency-sponsors.

Copies of the patents cited are available from the Commissioner of Patents & Trademarks, Washington, D.C. 20231, for $.50 each. Requests for copies of patents must include the patent number.

Copies of the patent applications can be purchased from the National Technical Information Service (NTIS), Springfield, Virginia 22161 for $4.00 ($8.00 outside North American Continent). Requests for copies of patent applications must include the PAT-APPL number. Claims are deleted from patent application copies sold to the public to avoid premature disclosure in the event of an interference before the Patent and Trademark Office. Claims and other technical data will usually be made available to serious prospective licensees by the agency which filed the case.

Requests for licensing information on a particular invention should be directed to the address cited for the agency-sponsor.

DOUGLAS J. CAMPION,
*Patent Program Coordinator, National Technical Information Service.*

U.S. DEPARTMENT OF THE AIR FORCE, AF/JACP, 1900 Half Street, SW., Washington, D.C. 20324.

Patent Application 925,899; 2-Amino-4-Ethynylphenol; filed July 19, 1978.

Patent Application 925,900; Fluorocarbon Ether-Bibenzoxazole Oligomers Containing Reactive Acetylenic Terminal Groups; filed July 19, 1978.

Patent Application 926,059; Microwave Power Level Stabilizing Circuit for Cesium Beam Frequency Standards; filed July 19, 1978.

Patent Application 926,358; Floating Head Laser Mirror Assembly; filed July 20, 1978.

Patent Application 928,329; Mechnical Munition Flight Environment Sensor; filed July 26, 1978.

Patent Application 932,986; Speckle Suppression of Holographic Microscopy; filed Aug. 8, 1978.

Patent 4,091,279; Method and Means for Equalizing the Sensitivity of a Multi-Element Sensor Array; filed Mar. 23, 1976; patented May 23, 1978; not available NTIS.

Patent 4,094,730; Method for Fabrication of High Minority Carrier Lifetime, Low to Moderate Resistivity, Single Crystal Silicon; filed Mar. 11, 1977 patented June 13, 1978; not available NTIS.

Patent 4,095,331; Fabrication of an Epitaxial Layer Diode in Aluminum Nitride on Sapphire; filed Nov. 4, 1976; patented June 20, 1978; not available NTIS.

Patent 4,095,420; Augmentor Outer Segment Lockout and Fan Upmatch; filed Apr. 26, 1977; patented June 20, 1978; not available NTIS.

Patent 4,096,509; MNOS Memory Transistor having a Redeposited Silicon Nitride Gate Dielectric; filed July 22, 1976, patented June 20, 1978; not available NTIS.

Patent 4,096,804; Plastic/Mischmetal Incendiary Projectile; filed Mar. 10, 1977; patented June 27, 1978; not available NTIS.

Patent 4,097,776; Coated Electroluminescent Phosphors; filed Mar. 25, 1977; patented June 27, 1978; not available NTIS.

U.S. DEPARTMENT OF AGRICULTURE, Research Agreements and Patent Branch, General Services Division, Federal Building, Agricultural Research Service, Hyattsville, Md. 20782.

Patent Application 897,083; Method of Protecting Proteins for Animal Feed; filed Apr. 17, 1978.

Patent Application 932,080; Precooked Baking Potatoes; filed Aug. 8, 1978.

Patent Application 934,288; Antibacterial Textile Finishes Utilizing Zinc Acetate and Hydrogen Peroxide; filed Aug. 17, 1978.

Patent 4,113,567; Insolubilization of Enzymes on Modified Phenolic Polymers; filed Aug. 25, 1977; patented Sept. 12, 1978, not available NTIS.

U.S. DEPARTMENT OF TRANSPORTATION, Patent Counsel, 400 7th Street, SW., Washington, D.C. 20590.

Patent 4,103,547; Locomotive Track Curvature Indicator; filed Feb. 7, 1977; patented Aug. 1, 1978; not available NTIS.

U.S. DEPARTMENT OF THE INTERIOR, Branch of Patents, 18th and C Streets, NW., Washington, D.C. 20240.

Patent Application 920,513; Method of Continuously Determining Radiation Working Level Exposure; filed June 29, 1978.

U.S. DEPARTMENT OF THE NAVY, Assistant Chief for Patents, Office of Naval Research, Code 302, Arlington, Va. 22217.

Patent Application 899,956; Energy Absorber; filed Apr. 25, 1978.

Patent 4,063,215; High Fidelity Low Frequency Transducer for Use at Great Depth; filed Feb. 28, 1977; patented Dec. 13, 1977; not available NTIS.

Patent 4,085,627; Elliptical Flywheel Apparatus; filed July 22, 1976; patented Apr. 25, 1978; not available NTIS.

Patent 4,085,795; Method for Using Geothermal energy; filed May 10, 1976; patented Apr. 25, 1978; not available NTIS.

Patent 4,089,162; Accommodating Device for Thermal Transient Expansions; filed Sept. 3, 1976; patented May 16, 1978; not available NTIS.

Patent 4,089,492; Ocean Adapted Airship; filed Jan. 27, 1977; patented May 16, 1978; not available NTIS.

Patent 4,091,711; Rotary Bolt Liquid Propellant Gun; filed May 26, 1977; patented May 30, 1978; not available NTIS.

Patent 4,091,731; Fuel Injection with Flameholding; filed July 6, 1976; patented May 30, 1978; not available NTIS.

Patent 4,091,732; Fuel Injection; filed July 6, 1976; patented May 30, 1978; not available NTIS.

Patent 4,092,383; Modification of Ballistic Properties of HMX by Spray Drying; filed Aug. 15, 1977; patented May 30, 1978; not available NTIS.

Patent 4,093,380; Optical Systems Utilizing Three-Wave Heterodyne Detectors; filed Nov. 4, 1976; patented June 6, 1978; not available NTIS.

Patent 3,695,951; Pyrotechnic Composition; filed June 25, 1970; patented October 3, 1972.

Patent 4,093,976; Acousto-Optic Image Scanner; filed Aug. 26, 1976; patented June 6, 1978; not available NTIS.

NATIONAL AERONAUTICS & SPACE ADMINISTRATION, Assistant General Counsel for Patent Matters, NASA Code GP-2, Washington, D.C. 20546.

Patent Application 929,087; Visible and Infrared Polarization Ratio Spectroreflectometer; filed July 28, 1978.

Patent Application 943,087; Hypersonic Air-breathing Missile; filed Sept. 18, 1978.

Patent 4,087,975; Ocean Thermal Plant; filed Mar. 29, 1977; patented May 9, 1978; not available NTIS.

Patent 4,088,954; Magnetometer with a Miniature Transducer and Automatic Scanning; filed Mar. 19, 1976; patented May 9, 1978; not available NTIS.

Patent 4,091,613; Independent Power Generator; filed July 30, 1976; patented May 30, 1978; not available NTIS.

Patent 4,093,156; Supersonic Transport; filed Aug. 27, 1976; patented June 6, 1978; not available NTIS.

Patent 4,093,917; Velocity Measurement System; filed Oct. 6, 1976; patented June 6, 1978; not available NTIS.

Patent 4,094,073; Angle Detector; filed Nov. 10, 1976; patented June 13, 1978; not available NTIS.

Patent 4,116,131; Solid Propellant Motor; filed May 13, 1970; patented Sept. 26, 1978; not available NTIS.

[FR Doc. 79-1723 Filed 1-17-79; 8:45 am]

---

[6360-01-M]

## DELAWARE RIVER BASIN COMMISSION

### PUBLIC HEARING

Notice is hereby given that the Delaware River Basin Commission will hold a public hearing on Wednesday, January 24, 1979, commencing at 2:00 p.m. The hearing will be a part of the Commission's regular January business meeting which is open to the public. Both the hearing and the meeting will be held at the Hall of Flags East, Sheraton Hotel, 17th and Kennedy Boulevards, Philadelphia, Pennsylvania. The subject of the hearing will be applications for approval of the following projects as amendments to the Comprehensive Plan pursuant to Article 11 of the Compact and/or as project approvals pursuant to Section 3.8 of the Compact.

1. *North Wales Water Authority (D-77-90 CP).* A well water supply project to augment public water supplies in the Authority's service area in Upper Gwynedd Township, Montgomery County, Pa. Designated as Well No. 23, the new facility is expected to yield 115,000 gallons per day.

2. *North Penn Water Authority (D-78-42 CP).* A well water supply project to augment public water supplies in the Authority's

service area in Skippack Township and adjacent Townships and Boroughs in Montgomery County, Pa. Designated as Well No. 39, the new facility has a capacity of 360,000 gallons per day.

3. *Audubon Water Company (D-78-77 CP).* A well water supply project to augment public water supplies in the Company's service area in Lower Providence Township, Montgomery County, Pa. Designated as Well No. 11, the new facility is expected to yield 20,000 gallons per day bringing the total capacity of the approved system to 78,000 gallons per day.

4. *Bristol Borough Water and Sewer Authority (D-78-83 CP).* A well water supply project to augment public water supplies in the Authority's service area in Bristol Township, Bucks County, Pa. Designated as Well No. 8, the new facility is expected to yield 288,000 gallons per day.

5. *Hatfield Borough (D-78-84 CP).* A well water supply project to augment water supplies in the Borough of Hatfield and adjacent portions of Hatfield Township, Montgomery County, Pa. The facility has a capacity of 180,000 gallons per day.

6. *Town of Smyrna (D-78-96 CP).* Increased water allocation of two existing wells serving the Town of Smyrna, Kent County, Del. Use of the two facilities would be limited to a combined withdrawal of 30 million gallons per month.

7. *New Hanover Township Authority (D-73-26 CP (Rev.)).* A sewage treatment project serving New Hanover and Upper Frederick Townships, Montgomery County. Pa. The treatment facility will provide removal of 85% of BOD from a sewage flow of 275,000 gallons per day. Treated effluent will discharge to eight spray irrigation fields.

8. *Abington Township (D-73-191 CP (Rev.)).* Upgrading of the Township's existing sewage treatment plant in Montgomery County, Pa., serving portions of Abington, Cheltenham, Springfield, Upper Dublin and Upper Moreland Townships, Montgomery County, Pa. The treatment plant will provide for removal of 95% of BOD from a sewage flow of approximately 3.9 million gallons per day. Treated effluent will discharge to Sandy Run, a tributary of Wissahickon Creek.

9. *Moyer Packing Co. (D-77-93).* Expansion of industrial waste treatment facilities at the company's plant in Franconia Township, Montgomery County, Pa. Additional facilities will provide treatment for up to 300,000 gallons per day and removal of approximately 99 percent of BOD and suspended solids. Treated effluent will discharge to Skippack Creek.

10. *Essex Chemical Corp. (D-77-95).* A wastewater treatment and a stream encroachment project at the company's property in Paulsboro, Gloucester County, N.J. Approximately 2.2 million gallons per day of treated wastewater will discharge to the Delaware River. Additional gypsum will be stored in the area adjacent to Mantua Creek.

11. *Brown Company (D-78-72).* Industrial waste treatment project at the Company's Specialty Products Division in Bristol Township, Bucks County, Pa. The applicant proposes to install additional waste treatment facilities to handle an average wastewater flow of 4 million gallons per day. Treated effluent will discharge to the Delaware River.

12. *Barcroft Company (D-78-85).* A well water supply project for use at the company's magnesium production plant in Lewes, Sussex County, Delaware. Four seawater infiltration wells with a combined design capacity of 580,000 gallons per day will be used at the plant.

Documents relating to the above-listed projects may be examined at the Commission's offices. Persons wishing to testify at this hearing are requested to register with the Secretary prior to the date of the hearing.

W. BRINTON WHITALL,
*Secretary.*

JANUARY 10, 1978.

[FR Doc. 79-1774 Filed 1-17-79; 8:45 am]

---

[6450-01-M]

## DEPARTMENT OF ENERGY

### Economic Regulatory Administration

### NORTHERN STATES POWER CO. 500 KV INTERNATIONAL TRANSMISSION LINE

### Availability of Final Environmental Impact Statement

AGENCY: Department of Energy, Economic Regulatory Administration.

ACTION: Notice of availability of final environmental impact statement.

SUMMARY: The Department of Energy gives notice of the availability of the final environmental impact statement (EIS) for the Northern States Power Company 500kV International Transmission Line, DOE/EIS-0032.

FOR FURTHER INFORMATION CONTACT:

James M. Brown, Jr., System Reliability and Emergency Response Branch, Department of Energy, Room 4070, Vanguard Building, 2000 M Street, N.W., Washington, D.C. 20461, (202) 634-5620.

Robert J. Stern, Office of Environment, Department of Energy, Room 7119, Federal Building, 12th and Pennsylvania Avenue, N.W., Washington, D.C. 20461, (202) 633-8755.

Lise Courtney Howe, Office of General Counsel, Department of Energy, Room 5116, Federal Building, 12th & Pennsylvania Avenue, N.W., Washington, D.C. 20461, (202) 633-8277 or (202) 633-9380.

SUPPLEMENTARY INFORMATION: The final environmental impact statement was prepared pursuant to the requirements of the National Environmental Policy Act of 1969 to analyze the environmental impacts of a 500kV transmission line extending to the U.S. Canadian border. This facility would be constructed and operated by the Northern States Power Company and the Minnesota Power and Light Company to exchange electric energy with the Manitoba Hydor-Electric Board. The construction of this facility will require the issuance of a Presidential Permit by DOE.

Copies of the draft EIS were distributed for review and comment to appropriate Federal, Minnesota and local agencies, and other organizations and individuals who were known to be interested in the project. All comments received were incorporated into the final EIS.

Copies of the final EIS have also been distributed for review and comment to appropriate Federal, Minnesota and local agencies, and other organizations and individuals who commented on the draft EIS.

Copies of the statement are also available for public inspection between the hours of 8 a.m. and 4:30 p.m., Monday through Friday, except holidays, at the following DOE public reading rooms:

FOI Reading Room GA-152, Department of Energy, 1000 Independence Avenue, SW., Washington, D.C. 20545.

Freedom of Information Reading Room, Department of Energy, Room 2107—Federal Building 12th & Pennsylvania Avenue, N.W., Washington, D.C. 20461.

Albuquerque Operations Office, National Atomic Museum, Kirtland Air Force Base, Albuquerque, New Mexico 87115.

Chicago Operations Office, 9800 South Cass Avenue, Argonne, Illinois 60439.

Chicago Operations Office, 175 West Jackson Boulevard, Chicago, Illinois 60604.

Idaho Operations Office, 550 Second Street, Idaho Falls, Idaho 83401.

Nevada Operations Office, 2753 South Highland Drive, Las Vegas, Nevada 89109.

Oak Ridge Operations Office, Federal Building, Oak Ridge, Tennessee 37830.

Richland Operation Office, Federal Building, Richland, Washington 99352.

San Francisco Operations Office, 1333 Broad, Oakland, California 94612.

Savannah River Operations Office, Savannah River Plant, Aiken, South Carolina 29801.

Individual copies of the final Environmental Impact Statement are available upon request at the System Reliability and Emergency Response Branch, U.S. Department of Energy, Room 4070—Vanguard Building, 2000 M Street, N.W., Washington, D.C. 20461.

Issued in Washington, D.C., January 15, 1979.

RUTH C. CLUSEN,
*Assistant Secretary for Environment.*

[FR Doc. 79-1760 Filed 1-17-79; 8:45 am]

[6450-01-M]

Federal Energy Regulatory Commission

[Docket No. CP79-126]

NORTHERN NATURAL GAS CO.

Application

JANUARY 11, 1979.

Take notice that on December 15, 1978, Northern Natural Gas Company (Applicant), 2223 Dodge Street, Omaha, Nebraska 68102, filed an application in Docket No. CP79-126 pursuant to section 7(c) of the Natural Gas Act for a certificate of public convenience and necessity authorizing Applicant to construct and operate certain small volume sales meters, and to sell and deliver natural gas, as set forth in the appendix hereto, all as more fully set forth in the application on file with the Commission and open to public inspection.

Applicant states that it has received gas service requests from 63 right-of-way grantors who meet the requirements for such service set forth in FPC Opinion No. 773, issued August 13, 1976. Accordingly, Applicant seeks authority to install and operate the necessary small volume sales meters to sell gas to these customers in Minnesota, South Dakota, Iowa, Nebraska, Kansas and Texas.

Further, there are stated to be two right-of-way customers in Oklahoma who seek gas service. Applicant requests authority to increase its annual delivery volumes of natural gas under Rate Schedule X-46 of Applicant's FPC Gas Tariff, Volume No. 2, to Southern Union Gas Company from 726,509 Mcf to 726,809 Mcf to meet these needs.

Any person desiring to be heard or to make any protest with reference to said application should on or before February 2, 1979, file with the Federal Energy Regulatory Commission, Washington, D.C. 20426, a petition to intervene or a protest in accordance with the requirements of the Commission's Rules of Practice and Procedure (18 CFR 1.8 or 1.10) and the Regulations under the Natural Gas Act (18 CFR 157.10). All protests filed with the Commission will be considered by it in determining the appropriate action to be taken but will not serve to make the protestants parties to the proceeding. Any person wishing to become a party to a proceeding or to participate as a party in any hearing therein must file a petition to intervene in accordance with the Commission's Rules.

Take further notice that, pursuant to the authority contained in and subject to the jurisdiction conferred upon the Federal Energy Regulatory Commission by Sections 7 and 15 of the Natural Gas Act and the Commission's Rules of Practice and Procedure, a hearing will be held without further notice before the Commission or its designee on this application if no petition to intervene is filed within the time required herein, if the Commission on its own review of the matter finds that a grant of the certificate is required by the public convenience and necessity. If a petition for leave to intervene is timely filed, or if the Commission on its own motion believes that a formal hearing is required, further notice of such hearing will be duly given.

Under the procedure herein provided for, unless otherwise advised, it will be unnecessary for Applicant to appear or be represented at the hearing.

KENNETH F. PLUMB,
*Secretary.*

| Utility Project No. | Right-of-Way Grantor | Legal Description Sec. | Twp. | Rge. | County | ST | Northern Pipeline Number | Estimated Sales (Mcf) Peak Day | Peak Month | Annual | Primary End-Use | Delivery Station Type Meter | Estimated Cost ($) | Daily Meter Cap (Mcf) |
|---|---|---|---|---|---|---|---|---|---|---|---|---|---|---|
| PEOPLES NATURAL GAS DIVISION | | | | | | | | | | | | | | |
| P-1 | Anderson Thomas | 22 | 110 | 53 | Kingsbury | SD | SDB 91901 | 2 0 | 45 | 190 | Res Heat | Am 5B | 870 | 13 7 |
| P 2 | Arduser Rose | 17 | 86 | 3 | Jones | IA | IB 54001 | 2 5 | 60 | 270 | Res Heat | R/W 175 | 890 | 13 7 |
| P-3 | Bangasser, Charles F | 17 | 121 | 24 | Wright | MN | MB-67101 | 3 0 | 40 | 200 | Res Heat | Am 5B | 1,000 | 13 7 |
| P 4 | Beving D E | 11 | 97 | 37 | Clay | IA | IB 49901 | 12 0 | 220 | 660 | Crop Dryer | R/W 1600 | 1,440 | 93 0 |
| P 5 | Bradley, Gary | 16 | 14 | 2 | Butler | NE | NB 44002 | 3 0 | 22 | 138 | Res Heat | Am 5B | 130 | 13 7 |
| P 6 | Bristle W W | 3 | 82 | 27 | Boone | IA | IB 65001 | 1 7 | 25 | 165 | Res Heat | Am 5B | 1,110 | 13 7 |
| P 7 | Broadie, Maurice R. | 12 | 99 | 36 | Dickinson | IA | IB-77401 | 1 1 | 28 | 156 | Res Heat | Am 5B | 1,040 | 13 7 |
| P 8 | Brown Robert S | 32 | 89 | 2 | Dubuque | IA | IB 40901 | 20 0 | 250 | 450 | Crop Dryer | Am 425 | 1,090 | 22 5 |
| P 9 | Button Ralph W | 9 | 19 | 13 | Barton | KS | KM 20501 | 1 5 | 40 | 191 | Res Heat | Am 250 | 1 200 | 13 7 |
| P 10 | Coffin, Leonard | 23 | 14 | 2 | Polk | NE | NB 44001 | 3 0 | 22 | 138 | Res. Heat | Am 5B | 1 040 | 13 7 |
| P 11 | Collingwood Trust | 5 | 31 | 29 | Meade | KS | KM-20201 | 72 0 | 2,160 | 13,200 | Irrigation | R/W 3000 | [illegible] | 1/5 0 |
| P 12 | Couillard, Thomas D | 3 | 33 | 21 | Chisago | MN | MM 86501 | 3 0 | 40 | 200 | Res Heat | Am 5B | 1,000 | 13 7 |
| P 13 | Cox, Forrest | 2 | 28 | 33 | Haskell | KS | KG 24701 | 33 6 | 600 | 3,800 | Irrigation | R/W 1600 | 1,100 | 93 0 |
| P 14 | Cox, Kenny | 11 | 28 | 33 | Haskell | KS | KG 24701 | 33 6 | 600 | 3,800 | Irrigation | R/W 1600 | 1 100 | 93 0 |
| P-15 | Engstrom, Roger | 30 | 97 | 33 | Palo Alto | IA | IB 59201 | 2 0 | 36 | 169 | Res Heat | Am 5B | 1,040 | 13 7 |
| P 16 | Fulmer, Gary | 35 | 12 | 8 | Lancaster | NE | NB 44601 | 10 0 | 300 | 560 | Irrigation | Am 5B | 1,330 | 13 7 |
| P 17 | Gould, Walter A. | 28 | 20 | 12 | Barton | KS | KM-20601 | 3 0 | 80 | 382 | Res Heat | Am 5B | 380 | 13 7 |
| P 18 | Gustafson, E Allen | 28 | 35 | 21 | Chisago | MN | MM 86501 | 1 3 | 40 | 178 | Res Heat | Am 5B | 1,000 | 13 7 |
| P 19 | Henderson, W Wallis | 34 | 86 | 6 | Linn | IA | IB 78601 | 1 5 | 40 | 165 | Res Heat | R/W 175 | 890 | 13 7 |
| P 20 | Holmer, Arthur | 10 | 83 | 30 | Greene | IA | IB 64002 | 13 5 | 200 | 590 | Crop Dryer | R/W 1600 | 1,400 | 93 0 |
| P 21 | Hosch Harbert | 24 | 87 | 2 | Dubuque | IA | IB 52401 | 1 4 | 30 | 165 | Res Heat | R/W 250 | 1 180 | 13 7 |
| P 22 | Huffman, Wesley N | 9 | 93 | 37 | Buena Vista | IA | IB-77701 | 2 0 | 45 | 190 | Res Heat | Am 5B | 1 170 | 13 7 |
| P-23 | James, Robert L | 21 | 28 | 19 | Kiowa | KS | KM 20605 | 21 6 | 587 | 1 640 | Irrigation | R/W 1600 | 1,020 | 93 0 |
| P 24 | Jensen, Lyman H | 24 | 107 | 19 | Steele | MN | MB 82001 | 3 0 | 27 | 210 | Res Heat | Am 5B | 910 | 13 7 |
| P 25 | Johnson, Ernest E | 8 | 36 | 28 | Benton | MN | MB 77501 | 1 3 | 40 | 178 | Res Heat | Am 5B | 1,100 | 13 7 |
| P 26 | Kearny County Land Co | 19 | 25 | 32 | Finney | KS | KG 42201 | 4 0 | 120 | 790 | Res Heat | Am 5B | 1,300 | 13 7 |
| P 27 | Kilburg Loras | 23 | 84 | 5 | Jackson | IA | IB 40701 | 4 8 | 100 | 528 | Crop Dryer | R/W 1600 | 1,930 | 93 0 |
| P 28 | Knop, Harold F | 13 | 96 | 23 | Hancock | IA | IM 60603 | 4 8 | 52 | 268 | Res Heat | Am 5B | 1 250 | 13 7 |
| P 29 | Kobs, William E | 14 | 31 | 28 | Meade | KS | KB 22101 | 28 8 | 864 | 2,666 | Irrigation | R/W 1600 | 1 600 | 93 0 |
| P 30 | Kruckenberg Homer A | 18 | 19 | 14 | Barton | KS | KM 20501 | 3 0 | 80 | 382 | Res Heat | Am 5B | 1,190 | 13 7 |
| P 31 | Kuehner Duane J | 6 | 97 | 8 | Winneshiek | IA | IB 56801 | 1 5 | 30 | 150 | Res Heat | R/W 175 | 890 | 13 7 |
| P 32 | Kunz Myron | 32 | 10 | 10 | Cass | NE | NM 40101 | 1 5 | 33 | 176 | Res Heat | Am 5B | 1,330 | 13 7 |
| P 33 | Kyser, Kenneth | 27 | 21 | 36 | Kearny | KS | KG 67901 | 2 0 | 20 | 110 | Res Heat | Sing. 250 | 1,400 | 13 7 |
| P 34 | Male, Joseph | 13 | 86 | 22 | Hardin | IA | IM 60902 | 18 2 | 244 | 447 | Crop Dryer | R/W 415 | 1,380 | 15 3 |
| P-35 | Mallak Ernest J | 27 | 117 | 28 | McLeod | MN | MB 75601 | 2 5 | 45 | 255 | Res Heat | Am 5B | 850 | 13 7 |
| P 36 | Metza Robert | 19 | 36 | 25 | Isanti | MN | MB-77501 | 1 3 | 40 | 178 | Res Heat | Am 5B | 1 000 | 13 7 |
| P 37 | Miller, Steven D | 5 | 118 | 31 | Meeker | MN | MB 75601 | 2 5 | 45 | 254 | Res. Heat | Am 5B | 850 | 13 7 |
| P-38 | Morris Harry C | 29 | 34 | 38 | Stevens | KS | KG 68501 | 33 6 | 600 | 4,000 | Irrigation | Met 35B | 850 | 91 2 |
| P-39 | Morris Stephen R | 29 | 34 | 38 | Stevens | KS | KG 68501 | 33 6 | 600 | 4,000 | Irrigation | Met 35B | 850 | 91 2 |
| P 40 | Nelson, Marvin | 12 | 2 | 5 | Gage | NE | NM 40104 | 1,5 | 41 | 156 | Res Heat | Am 5B | 830 | 13 7 |
| P 41 | Nemmers John R | 2 | 104 | 49 | Minnehaha | SD | SDB 95701 | 2 0 | 45 | 190 | Res Heat | Am 425 | 860 | 22 5 |

| Utility Project No. | Right-of-Way Grantor | Legal Description Sec. | Twp. | Rge. | County | ST | Northern Pipeline Number | Estimated Sales (Mcf) Peak Day | Peak Month | Annual | Primary End-Use | Delivery Station Type Meter | Estimated Cost ($) | Daily Meter Cap. (Mcf) |
|---|---|---|---|---|---|---|---|---|---|---|---|---|---|---|
| **PEOPLES DIVISION (Continued)** | | | | | | | | | | | | | | |
| P 42 | Noy, Stanley | 3 | 95 | 8 | Fayette | IA | IB 51101 | 20 0 | 440 | 1,155 | Crop Dryer | R/W 1600 | 1,320 | 93 0 |
| P 43 | Olson, Alan | 10 | 26 | 7 | Thurston | NE | NB 57001 | 2 8 | 80 | 430 | Res. Heat | Am 5B | 1,630 | 13 7 |
| P 44 | Fletcher, William | 20 | 12 | H&GN | Ochiltree | TX | TG 21501 | 31 2 | 600 | 3,000 | Irrigation | R/W 1600 | 1,230 | 93 0 |
| P 45 | Pottebaum, Howard R | 28 | 95 | 43 | Sioux | IA | IM 65801 | 64 0 | 367 | 1,060 | Crop Dryer | R/W 1600 | 1,390 | 93 0 |
| P 46 | Riley, Tom | 28 | 102 | 38 | Jackson | MN | MB 87001 | 2 0 | 40 | 210 | Res Heat | Am 5B | 1,040 | 13 7 |
| P 47 | Roberts, William B | 8 | 91 | 40 | Cherokee | IA | IB 44501 | 3 0 | 32 | 160 | Res. Heat | Am 5B | 1,190 | 13 7 |
| P 48 | Rodenborg, Everett E | 23 | 39 | 23 | Kanabec | MN | MB 64701 | 1 3 | 40 | 178 | Res Heat | Am 5B | 1,000 | 13.7 |
| P 49 | Saxmon, Donald C | 33 | 107 | 21 | Steele | MN | MM 80301 | 40 0 | 100 | 305 | Crop Dryer | R/W 1600 | 1,110 | 93 0 |
| P 50 | Schlichter, Vincent J | 32 | 102 | 16 | Mower | MN | MB-58801 | 60 0 | 720 | 1,200 | Crop Dryer | R/W 1600 | 1,080 | 93 0 |
| P 51 | Scott, Wilbur A | 24 | 29 | 24 | Ford | KS | KM 20201 | 21 6 | 576 | 1,439 | Irrigation | R/W 1600 | 1,260 | 93 0 |
| P 52 | Severance, James | 1 | 87 | 17 | Grundy | IA | IB 73401 | 4 0 | 30 | 180 | Res Heat | R/W 175 | 890 | 13 7 |
| P 53 | Shimon, William | 24 | 92 | 32 | Pocahontas | IA | IB 77701 | 70 0 | 300 | 600 | Crop Dryer | R/W 1600 | 1,420 | 93.0 |
| P 54 | Shriver, Richard L | 13 | 94 | 39 | O'Brien | IA | IB 77701 | 2 5 | 32 | 160 | Res Heat | Am 250 | 1,130 | 13 7 |
| P 55 | Staban, Alvin C | 31 | 12 | 12 | Cass | NE | NB 47701 | 1 5 | 33 | 176 | Res Heat | Am 5B | 1,330 | 13 7 |
| P 56 | Stence, John E | 36 | 93 | 5 | Clayton | IA | IB 51301 | 1 5 | 40 | 180 | Res. Heat | R/W 175 | 890 | 13 7 |
| P-57 | Strandmark Richard | 29 | 26 | 32 | Finney | KS | KG 42701 | 72 0 | 2,000 | 11,000 | Irrigation | R/W 3000 | 1,600 | 146 0 |
| P 58 | Swanson, Dale | 23 | 89 | 38 | Sac | IA | IB 44501 | 20 0 | 160 | 510 | Crop Dryer | R/W 1600 | 1,440 | 93 0 |
| P 59 | Tessmer, Donald R | 23 | 36 | 26 | Mille Lacs | MN | MB-77501 | 3 0 | 40 | 200 | Res Heat | Am 5B | 1,000 | 13 7 |
| P 60 | Thompson, Chester H | 10 | 98 | 48 | Lyon | IA | SDM 90801 | 2 0 | 32 | 160 | Res Heat | Am 5B | 870 | 13 7 |
| P 61 | VanDenBerg, Robert J, | 2 | 32 | 26 | Sherburne | MN | MB 67701 | 1 3 | 40 | 200 | Res Heat | Am 5B | 1,000 | 13 7 |
| P 62 | Wenger Farms, Inc #1 | 19 | 84 | 27 | Boone | IA | IM 60902 | 13 5 | 200 | 590 | Crop Dryer | R/W 1600 | 1,400 | 93 0 |
| P 63 | Wenger Farms, Inc #2 | 30 | 84 | 27 | Boone | IA | IM 60901 | 1 7 | 25 | 165 | Res Heat | Am 5B | 1,320 | 13 7 |
| P 64 | Worlie, Richard | 14 | 119 | 61 | Spink | SD | SDM 90801 | 2 0 | 45 | 190 | Res Heat | Am 5B | 1,150 | 13 7 |
| P 65 | Yetzer, Wilfred R | 17 | 116 | 24 | Carver | MN | MB 67301 | 2.5 | 45 | 256 | Res Heat | Am 5B | 910 | 13 7 |
| | Totals, Peoples Division | | | | | | | 841.6 | 14,553 | 67,245 | | | $73,080 | |
| **SOUTHERN UNION GAS COMPANY** | | | | | | | | | | | | | | |
| S 1 | Hodges, J R | 28 | 6 | 24 | Beaver | OK | OG 32601 | 1 0 | 20 | 150 | Res Heat | Am 5B | 860 | 13 7 |
| S 2 | Hodges, R E | 26 | 5 | 23 | Beaver | OK | OG 34601 | 1.0 | 20 | 150 | Res Heat | Am 5B | 860 | 13 7 |
| | Totals, Southern Union | | | | | | | 2.0 | 40 | 300 | | | $ 1,720 | |
| | TOTALS, ALL PROJECTS | | | | | | | 843.6 | 14,593 | 67,545 | | | $74,800 | |
| | Commission Costs | | | | | | | | | | | | 200 | |
| | TOTAL COSTS, ALL PROJECTS | | | | | | | | | | | | $75,000 | |

[FR Doc 79-1581 Filed 1-17-79; 8:45 am]

[6450-01-M]

Office of Hearings and Appeals

## ISSUANCE OF PROPOSED DECISIONS AND ORDERS

December 18 through December 22, 1978

Notice is hereby given that during the period December 18 through December 22, 1978, the Proposed Decisions and Orders which are summarized below were issued by the Office of Hearings and Appeals of the Department of Energy with regard to Applications for Exception which had been filed with that Office.

Amendments to the DOE's procedural regulations, 10 CFR Part 205, were issued in proposed form on September 14, 1977 (42 FR 47210 (September 20, 1977)), and are currently being implemented on an interim basis. Under the new procedures any person who will be aggrieved by the issuance of a Proposed Decision and Order in final form may file a written Notice of Objection within ten days of service. For purposes of the new procedures, the date of service of notice shall be deemed to be the date of publication of this Notice (January 18, 1979), or the date of receipt by an aggrieved person of actual notice, whichever occurs first. The new procedures also specify that if a Notice of Objection is not received from any aggrieved party within the time period specified in the regulations, the party will be deemed to consent to the issuance of the Proposed Decision and Order in final form. Any aggrieved party that wishes to contest any finding of conclusion contained in a Proposed Decision and Order must also file a detailed Statement of Objections within 30 days of the date of service of the Proposed Decision and Order. In that Statement of Objections an aggrieved party must specify each issue of fact or law contained in the Proposed Decision and Order which it intends to contest in any further proceeding involving the exception matter.

Copies of the full text of these Proposed Decisions and Orders are available in the Public Docket Room of the Office of Hearings and Appeals, Room B-120, 2000 M Street, NW., Washington, D.C. 20461, Monday through Friday, between the hours of 1:00 p.m. and 5:00 p.m., e.s.t., except federal holidays.

JANUARY 12, 1979.

MELVIN GOLDSTEIN,
*Director, Office of Hearings and Appeals.*

PROPOSED DECISIONS AND ORDERS

*Burk Royalty Company, Washington, D.C., DEE-1010, crude oil*

The Burk Royalty Co. filed an Application for Exception from the provisions of 10 CFR, Part 212, Subpart D. By permitting the firm to sell the crude oil produced for the benefit of the working interest owners at the Garden Island properties at upper tier ceiling prices, the exception request, if granted, would enable the firm to invest in new equipment for the properties. On December 21, 1978, the DOE issued a Proposed Decision and Order which determined that the exception request be granted.

*Chevron USA, Inc., San Francisco, California, DEE-1968, crude oil*

Chevron USA, Inc. (Chevron) filed an Application for Exception from the provisions of 10 CFR, Part 212, Subpart D. The exception request, if granted, would permit Chevron to sell a portion of the crude oil produced for the working interest owners at the Murphy Non-Unit at upper tier ceiling prices. On December 21, 1978, the DOE issued a Proposed Decision and Order which determined that the exception request be granted.

*City of Long Beach, California, Long Beach, California, DXE-2023, crude oil*

The City of Long Beach, California filed an Application for Exception from the provisions of 10 CFR, Part 212, Subpart D. The exception request, if granted, would result in an extension of exception relief previously granted and would permit the working interest owners to continue selling a portion of the crude oil which is produced at the Fault Block II Unit of the Wilmington Field located in Los Angeles County, California, at upper tier ceiling prices. *City of Long Beach, California*, 2 DOE Par. 81,008 (1978). On December 18, 1978, the DOE issued a Proposed Decision and Order to the City of Long Beach, California, which would grant an extension of exception relief permitting the City to sell at upper tier ceiling prices 53.78 percent of the crude oil produced for the benefit of the working interest owners at the Fault Block II Unit during the period January 1, 1979 through June 30, 1979.

*Consumers Power Company, Jackson, Michigan, DEE-0978, residual fuel oil*

Comsumers Power Company filed an Application for Exception in which it requested additional entitlement benefits for each barrel of residual fuel oil which it has imported into the State of Michigan since January 1, 1977. On December 21, 1978, the DOE issued a Proposed Decision and Order which determined that the exception request be denied.

*Chester F. Dolley and Atlantic Oil Company, Los Angeles, California, DEE-1020 and DEE-1032, crude oil*

Chester F. Dolley and the Atlantic Oil Company filed Applications for Exception from § 212.54 of the Mandatory Petroleum Price Regulations. The exception requests, if granted, would have the effect of relieving them of any obligation to refund revenues that they received by charging prices in excess of the maximum levels permitted by §§ 212.72 and 212.73. On December 19, 1978, the DOE issued a Proposed Decision and Order which determined that the exception requests should be denied.

*Gary Operating Company, Englewood, Colorado, DEE-1975, crude oil*

Gary Operating Company filed an Application for Exception from the provisions of 10 CFR, Part 212, Subpart D, in which the firm requested that it be permitted to sell certain of the crude oil produced from the Ranch Creek Muddy Sand Unit, located in Powder River County, Montana, at upper tier ceiling price levels. On December 21, 1978, the DOE issued a Proposed Decision and Order which determined that the Gary exception request be denied.

*Gulf Oil Corporation, Tulsa, Oklahoma, DXE-2024, crude oil*

Gulf Oil Corporation filed an Application for Exception from the provisions of 10 CFR, Part 212, Subpart D. The exception request, if granted, would permit Gulf to sell at upper tier ceiling prices the crude oil which it produces from the Northwest Graylin "D" Sand Unit. On December 18, 1978, the DOE issued a Proposed Decision and Order which determined that Gulf should be permitted to sell at upper tier ceiling prices 57.36 percent of the crude oil produced from the Northwest Graylin "D" Sand Unit for the benefit of the working interest owners during the period January 1, 1979 through June 30, 1979.

*H.&M. Oil Company, Lyman, Wyoming, DEE-0893, crude oil*

The H.&M. Oil Company filed an Application for Exception from the provisions of 10 CFR, Part 212, Subpart L. The exception request, if granted, would permit H.&M. to sell the crude oil which it obtains from processing contaminated or waste crude oil without regard to the restrictions imposed by the Mandatory Petroleum Price Regulations. On December 18, 1978, the DOE issued a Proposed Decision and Order in which it determined that the exception request should be granted in part.

*Henry Petroleum Corporation, Martin County, Texas, DEE-1400, crude oil*

The Henry Petroleum Corporation filed an Application for Exception from the provisions of 10 CFR, Part 212, Subpart D. The exception request, if granted, would permit the working interest owners to sell the crude oil produced from the Epley B lease at market prices. The request would also allow Henry to treat the Epley B lease as a new crude oil producing property with a zero base production control level effective February 1, 1975. On December 19, 1978 the DOE issued a Proposed Decision and Order denying the Henry exception request.

*Pacific Resources, Inc., Honolulu, Hawaii, DEE-1874, residual fuel oil*

Pacific Resources, Inc. filed an Application for Exception from the provisions of 10 CFR 211.67. The PRI exception request, if granted, would result in the issuance of entitlements to PRI for each barrel of residual fuel oil produced by the firm which is transported and sold into the East Coast market. On December 18, 1978, the DOE issued a Proposed Decision and order which determined that the exception request be denied.

*Perrault Production Company, Tulsa, Oklahoma, DXE-1943, crude oil*

On October 4, 1978, the Perrault Producing Company (Perrault) filed an Application

for Exception from the provisions of 10 CFR, Part 212, Subpart D. The exception request, if granted, would permit Perrault to sell at exempt prices all of the crude oil produced and sold for the benefit of the working interest owners from the Varnum and Cudjo Leases located in Seminole County, Wyoming. On December 21, 1978, the Department of Energy issued a Proposed Decision and Order which granted in part Perrault's request.

*Rickelson Oil and Gas Company, Tulsa, Oklahoma, DEE-0363, crude oil*

The Rickelson Oil and Gas Company filed an Application for Exception from the provisions of 10 CFR, Part 212, Subpart D. The exception request, if granted, would permit the firm to sell at upper tier ceiling price levels the crude oil produced from the Chapman "A" Lease located in Hughes County, Oklahoma. On December 18, 1978, the DOE issued a Proposed Decision and Order in which it determined that the exception request be granted.

*Southwestern Refining Company, Inc., Washington, D.C., DEE-0483, crude oil*

Southwestern Refining Company, Inc. filed an Application for Exception from the provisions of 10 CFR 211.67. The exception request, if granted, would relieve Southwestern of its obligation to purchase entitlements with respect to the crude oil that it refines. On December 19, 1978, the DOE issued a Proposed Decision and Order which determined that the firm's request should be denied in the form submitted. However, the DOE also determined that the obligations of the Mobil Oil Corporation and the Mountain Fuel Supply Company to allocate crude oil supplies to Southwestern's supplier, Johnson Oil Company, should be terminated, and that Mobil and Mountain should supply the same quantities of crude oil directly to Southwestern.

*Texaco, Inc., Denver, Colorado, DEE-1394, crude oil*

Texaco, Inc. filed an Application for Exception from the provisions of 10 CFR, Part 212, Subpart D, in which the firm requested that it be permitted to sell certain of the crude oil produced from the Government Graves Lease, located in Campbell County, Wyoming, at upper tier ceiling price levels. On December 21, 1978, the DOE issued a Proposed Decision and Order which determined that the Texaco exception request be granted.

*Texaco, Inc., Los Angeles, California, DEE-1777, crude oil*

Texaco, Inc. filed an Application for Exception from the provisions of 10 CFR, Part 212, Subpart D which, if granted, would permit Texaco to sell at market prices the crude oil which it produces for the benefit of the working interest owners from the TS-1 and TS-3 wells which operate from an offshore drilling platform known as Platform A located in Cook Inlet, Alaska. On December 21, 1978, the DOE issued a Proposed Decision and Order tentatively granting Texaco permission to sell 74.41 percent at market prices and 25.59 percent at upper tier ceiling prices for twelve months following completion of the investment plan described in Texaco's application, and 100 percent at market prices in the subsequent three month period.

*Union Oil Company of California, Los Angeles, California, DXE-2016, crude oil*

Union Oil Company of California filed an Application for Exception from the provisions of 10 CFR, Part 212, Subpart D. The exception request, if granted, would permit the firm to continue to sell a portion of the crude oil produced from the West Richfield Chapman Zone Unit at upper tier ceiling price levels. On December 18, 1978, the DOE issued a Proposed Decision and Order which determined that the exception request be granted.

*Young Coal Company, Waterloo, Iowa, DEE-0664, fuel oil*

Young Coal Company filed an Application for Exception from the provisions of 10 CFR 212.93. The exception request, if granted, would permit Young to increase retroactively its maximum permissible selling prices for No. 1, No. 2 and No. 5 fuel oils and relieve the firm of the obligation to refund overcharges under the terms of a Remedial Order issued by DOE Region VII. On December 19, 1978, the DOE issued a Proposed Decision and Order which determined that the exception request be denied.

[FR Doc. 79-1761 Filed 1-17-79; 8:45 am]

---

[6450-01-M]

## ISSUANCE OF PROPOSED DECISION AND ORDER

**December 26 through December 29, 1978**

Notice is hereby given that during the period December 26 through December 29, 1978, the Proposed Decision and Order which is summarized below was issued by the Office of Hearings and Appeals of the Department of Energy with regard to an Application for Exception which had been filed with that Office.

Amendments to the DOE's procedural regulations, 10 CFR, Part 205, were issued in proposed form on September 14, 1977 (42 F.R. 47210 (September 20, 1977)), and are currently being implemented on an interim basis. Under the new procedures any person who will be aggrieved by the issuance of a Proposed Decision and Order in final form may file a written Notice of Objection within ten days of service. For purposes of the new procedures, the date of service of notice shall be deemed to be the date of publication of this Notice (January 17, 1979) or the date of receipt by an aggrieved person of actual notice, whichever occurs first. The new procedures also specify that if a Notice of Objection is not received from any aggrieved party within the time period specified in the regulations, the party will be deemed to consent to the issuance of the Proposed Decision and Order in final form.

Any aggrieved party that wishes to contest any finding or conclusion contained in a Proposed Decision and Order must also file a detailed Statement of Objections within 30 days of the date of service of the Proposed Decision and Order. In that Statement of Objections an aggrieved party must specify each issue of fact or law contained in the Proposed Decision and Order which it intends to contest in any further proceeding involving the exception matter.

Copies of the full text of this Proposed Decision and Order is available in the Public Docket Room of the Office of Hearings and Appeals, Room B-120, 2000 M Street, NW., Washington, D.C. 20461, Monday through Friday, between the hours of 1:00 p.m. and 5:00 p.m., e.s.t., except federal holidays.

MELVIN GOLDSTEIN,
*Director,*
*Office of Hearings and Appeals.*

JANUARY 12, 1979.

### PROPOSED DECISION AND ORDER

Mobile Oil Corporation, New York, New York, DXE-2007, crude oil

Mobile Oil Corporation filed an Application for Exception from the provisions of 10 CFR, Part 212, Subpart D which, if granted, would permit Mobil to continue selling at upper tier prices certain of the crude oil which it produces for the benefit of the working interest owners of the H&J 495-D Lease located in North Russell Devonian Field, Gaines County, Texas. On December 28, 1978, the DOE issued a Proposed Decision and Order tentatively granting Mobil permission to sell 64.29 percent of the working interest share of production at upper tier ceiling prices for the period from January 1, 1979 until June 30, 1979.

[FR Doc. 79-1762 Filed 1-17-79; 8:45 a.m.]

---

[6450-01-M]

## ISSUANCE OF DECISIONS AND ORDERS

**Week of October 10 through October 13, 1978**

Notice is hereby given that during the week of October 10 through October 13, 1978, the Decisions and Orders summarized below were issued with respect to Appeals and Applications for Exception or other relief filed with the Office of Hearings and Appeals of the Department of Energy. The following summary also contains a list of submissions which were dismissed by the Office of Hearings and Appeals and the basis for the dismissal.

### APPEALS

*Harold Fruchtbaum, New York, New York, DFA-0211, Freedom of Information*

Harold Fruchtbaum appealed from a partial denial of a request for information which he had filed under the Freedom of Information Act (the Act). In his request for information, Fruchtbaum had sought

copies of certain reports written by Dr. Klaus Fuchs during the time Fuchs was at the Los Alamos Scientific Laboratory. The DOE initially released copies of four of the requested documents but withheld several documents on the grounds that they were exempt from disclosure under the provisions of Exemption 1 (national security information) and Exemption 3 (information specifically exempted from disclosure by another statute) of the Act. In considering Fruchtbaum's Appeal, the DOE found that the documents withheld from Fruchtbaum contained "Restricted Data" as that term is defined in the Atomic Energy Act. Since the unauthorized release of "Restricted Data" is prohibited by the Atomic Energy Act, the DOE determined that the documents were properly withheld under Exemption 3. The DOE further determined that, in as much as the documents at issue contained information ralating to the design of nuclear weapons, their release could adversely affect National security. The DOE therefore concluded that the documents were also properly withheld under Exemption 1. Accordingly, Fruchtbaum's Appeal was denied.

*Home Gas Service, Inc., Swanton, Ohio, FRA-1466, Propane*

Home Gas Service, Inc. Filed an Appeal of a Remedial Order which was issued to the firm by the FEA Region V Office on August 22, 1977. In the Remedial Order, the Regional Office found tha Home gas had sold propane at prices which exceeded the maximum permissible price levels calculated pursuant to 10 CFR 212.93. In its Appeal, Home Gas did not challenge any of the factual or legal findings contained in the Remedial Order. Instead, Home Gas claimed that it was entitled to exception relief because the application of Section 212.93 to its operations would result in an inequity and a hardship and because enforcement of the Remedial Order could cause the firm to terminate its business operations. In support of its claim for exception relief, Home Gas contended that its markup on sales of propane on May 15, 1973 was abnormally low because of a seasonal price discount offered by the firm on that date. The DOE rejected this argument, noting that the firm would have earned substantial profits throughout the entire period covered by the Regional Office's audit if it had charged lawful prices. Consequently, the DOE determined that Home Gas had failed to make a *prima facie* showing that exception relief should be granted in this case. However, the DOE also concluded that if Home Gas were required to refund the overcharges in the manner set forth in the Remedial Order, the firm's profitability in future periods would be reduced to unreasonably low levels. Accordingly, the DOE ordered the Region V Office to issue a revised Remedial Order to Home Gas which will not require the firm to implement refunds in any single year which exceed the average annual amount of overcharges obtained during the FEA audit period. In all other respects, the Home Gas Appeal was denied.

*Karchmer Pipe & Supply Company, Centralia, Illinois, FXA-1365, crude oil*

Karchmer Pipe & Supply Company filed an Appeal from a Decision and Order which was issued to the firm on February 22, 1977. *Karchmer Pipe & Supply Co.*, 5 FEA Par. 83,075 (1977). In the February 22 Decision and Order, the FEA denied Karchmer's request for retroactive exception relief and granted its request for prospective exception relief from the provisions of 10 CFR, Part 212, Subpart D. The Appeal, if granted would have permitted Karchmer to retain revenues which it apparently received as a result of charging unlawfully high prices for the crude oil produced from its Patoka Unit No. 1 in Marion County, Illinois. The Appeal would also have extended prospective exception relief to the other working interest owner on the Unit. In considering the firm's Appeal, the DOE found that the firm had merely reiterated the contentions which it has raised in the exception proceeding regarding retroactive relief and had failed to demonstrate that the DOE's analysis of any of these contentions was erroneous in fact or law or was arbitrary or capricious. The DOE therefore denied Karchmer's Appeal of the February 22 Order with respect to retroactive exception relief. The DOE also found that Karchmer's request that prospective exception relief be extended to the other working interest owner had not beeen raised in Karchmer's initial exception application. The DOE therefore concluded that this aspect of Karchmer's submission would be considered as an exception request under the provisions of Part 205, Subpart D and that a separate order would be issued with respect to that matter.

*Martin Oil Company, Wichita, Kansas, DRA-0118, crude oil*

The Martin Oil Company filed an Appeal from a Remedial Order which the Acting Director of Enforcement of DOE Region VII issued to the firm on January 5, 1978. In the Remedial Order, the DOE Regional Office found that Martin had improperly classified its Spier Lease and "Montford Property" as stripper well properties, and had, as a result, sold crude oil produced from the properties at prices which were in excess of those permitted by the Mandatory Petroleum Price Regulations. In considering the Martin Appeal, the DOE determined that the Remedial Order was correct in finding that a series of post-1972 subdivisions of the premises of which the Spier Lease was originally a part did not establish a new "property" for purposes of measuring the lease's base production control level. With respect to the "Montford Property" Martin argued that the Regional Office's determination that interest be paid on the overcharges was arbitrary and capricious. In support of this position, Martin contended that in a number of consent orders the DOE had compromised or waived the payment of interest and that by voluntarily refunding the full amount of its overcharges Martin had placed itself in a situation similar to that of a firm that agreed to a consent order. The DOE found, however, that Martin's refund of overcharges had not made formal administrative proceedings unnecessary and that the firm had not waived its right to judicial review. The DOE further found that the firm had not specified any unusual circumstances which should have led the Regional Office to exercise its discretion to waive the payment of interest in this case. Consequently, the DOE determined that Martin had failed to demonstrate that any of the circumstances which might justify the waiver or compromise, in a consent order, of the generally imposed requirement that interest be paid on overcharges existed in the present case. The DOE therefore concluded that the January 5 Remedial Order was neither erroneous in fact or law nor arbitrary and capricious. Accordingly, the Martin Appeal was denied.

*State of Illinois, Chicago, Illinois, DFA-0210, Freedom of Information*

The State of Illinois appealed from a denial by the Acting Director of the Office of Nuclear Waste Management of a Request for Information which the State submitted under the Freedom of Information Act (the Act). In its Appeal, the State requested that the DOE order the release of two documents withheld on the grounds that they are intra-agency memoranda which are exempt from mandatory public disclosure under the provisions of 5 U.S.C. 552(b)(5). In considering the Appeal, the DOE found that the documents which were withheld from the State generally analyze and make recommendations concerning alternative methods of implementing the DOE's spent nuclear fuel policy. The DOE therefore determined that the material which was withheld is precisely the type of information which Exemption 5 of the Act was designed to protect from disclosure and that the release of the material would not be in the public interest. The States's Appeal was therefore denied.

*Sun Company, Inc., Philadelphia, Pennsylvania, FXA-1282, motor gasoline*

Sun Company, Inc. filed and Appeal from a Decision and Order which the Federal Energy Administration issued to Amtel, Inc. on February 25, 1977. *Amtel, Inc.*, 5 FEA Par. 83,091 (1977). The prior proceeding involved the allocation and pricing of the motor gasoline that Sun supplied to South Central Oil Company, a marketing subsidiary which Amtel acquired from Sun on March 29, 1974. In the February 25 Decision, the FEA granted Amtel an exception which required Sun to establish a new class of purchaser for sales of motor gasoline to Amtel's South Central subsidiary and also directed Sun to determine its prices to that class of purchaser under 10 CFR 212.111(b)(1) (the new item rule). In its Appeal, Sun first claimed that the FEA's determination exceeded the agency's authority and denied Sun due process of law. In rejecting those contentions, the DOE found that, contrary to Sun's assertions: (i) The exceptions process was the appropriate forum for consideration of Amtel's claims of serious hardship and gross inequity; (ii) the February 25 Decision did not constitute an improper remedial order proceeding, because the pricing methodology prescribed by the FEA in that determination was not based on any finding that Sun had violated the price regulation; (iii) the prior determination did not constitute a procedurally invalid rulemaking proceeding in which the agency failed to provide Sun with adequate notice and opportunity to comment; and (iv) Sun was afforded an adequate opportunity to respond to the evidence on which the FEA relied in granting exception relief to Amtel

Sun next contended that Amtel had failed to establish that it qualified for exception relief. The DOE also rejected this claim, finding that: (i) Amtel was not stopped from seeking exception relief with respect to South Central's financial operations merely because Sun had notified Amtel of South Central's financial position prior to Amtel's acquisition of South Central; (ii) the Febru-

ary 25 Order did not constitute an impermissible government impairment of the contract between Sun and Amtel for the sale of South Central; and (iii) Sun's contention that Amtel had failed to demonstrate the existence of a serious hardship was irrelevant because the exception relief granted to Amtel was based upon gross inequity rather than serious hardship.

With respect to Sun's third contention, however, the DOE agreed with Sun that the exception relief previously granted to Amtel should be revised. The DOE found that the requirement in the February 25, Order that Sun refer to the new item rule in establishing its prices to Amtel had not accomplished the objective of lowering Sun's prices to Amtel and in turn lowering Amtel's prices to South Central's historical wholesale purchasers. The DOE concluded that in order to accomplish that objective Sun should continue to treat Amtel/South Central as a separate class of purchaser, but that Sun should adopt as its imputed May 15, 1973 selling price to Amtel the lowest price that Sun had charged to members or its wholesale unbranded class of purchaser on that date. The DOE also determined that this revised exception relief should be limited to the volume of motor gasoline which Sun sold to Amtel for resale to South Central's customers at the wholesale level. Finally, the DOE noted that Whitco, Inc., an historical purchaser of gasoline from South Central, is currently subject to exception relief which permits it to purchase gasoline directly from Sun rather than through Amtel/South Central. The DOE indicated that the supplier/purchaser relationships among Sun, Amtel and Whitco would be reevaluated in a future determination to consider whether Whitco should be required once again to purchase motor gasoline directly from Amtel rather than Sun. On the basis of these considerations the Sun Appeal was granted in part and denied in part.

*T-C Oil Company, San Antonio, Texas, DRA-0140, crude oil*

The T-C Oil Company filed an Appeal from a Remedial Order which was issued to the firm by the Acting Director of Enforcement of DOE Region VI on January 6, 1978. In the Remedial Order, the Regional Office determined that T-C Oil had sold crude oil produced from its "L" and "A" leases at unlawful price levels. In its Appeal, T-C Oil contended that the aggregation of the right to produce condensate from the "L" lease with the right to produce condensate from two other leases in the same field, all of which was processed in T-C Oil's mechanical separator facility, created a new "property" which was separate from the three leases. T-C Oil also argued that the light and heavy crude oil producing reserviors on the "L" lease constitute two separate "properties." The firm also asserted that it was entitled to offset the undercharges which occurred on its "LP" and "D" leases against the overcharges found to have occurred on the "L" lease. Finally, T-C Oil asserted that the DOE was barred by the applicable Texas statute of limitations from issuing any orders to T-C Oil to refund overcharges for the audit period. In considering the Appeal, the DOE found that each of the three leases from which casinghead gas was recovered and processed into condensate at the mechanical separator facility constitutes a single right to produce and therefore a single "property" under the Mandatory Petroleum Price Regulations. The DOE held that T-C Oil's construction of a mechnical separator facility and its use of that facility to process the casinghead gas recovered from each of the leases did not create a new right to produce and therefore did not create a new property separate from the three leases. In regard to T-C Oil's separate reservior argument, the DOE held that before September 1, 1976 the existence of two or more separate reserviors did not create two or more separate "properties," notwithstanding any alleged separate development, production, and pricing of production from the reserviors. The DOE also determined that while under appropriate circumstances a Regional Office could exercise its discretion to permit a firm to offset undercharges and overcharges among two or more leases, the record in the present case did not support the granting of an offset. Finally, the DOE determined that the Texas statutes of limitations was not applicable to the present enforcement action against T-C Oil. Accordingly, the T-C Oil Appeal was denied.

*Trends Publishing, Inc., Washington, D.C., DFA-0220, Freedom of Information*

Trends Publishing, Inc. filed an Appeal of an order issued by the Director of Safeguards and Security of Defense Programs (OSSDP) denying a request for information that Trends submitted under the Freedom of Information Act. The DOE noted that the Trends Appeal had not been filed within 60 days of receipt of the OSSDP order as required by § 709.10(b) of the regulations of the Energy Research and Development Administration (ERDA), which governed the Appeal. The DOE also noted that Trends had failed to show good cause for its failure to file its Appeal in a timely manner. The Trends Appeal was therefore dismissed. However, in view of the fact that the Trends Appeal was one of the first requests filed under ERDA regulations to be reviewed by the Office of Hearings and Appeals, Trends was given leave to file an amended appeal that satisfies the provisions of § 709.10.

*Vickers Dividend Oil Company, Wichita, Kansas, DEA-0082, motor gasoline*

The Vickers Dividend Oil Company filed an Appeal from an Assignment Order which was issued to it by the Acting Regional Representative of DOE Region VIII on November 8, 1977. The Appeal, if granted, would result in the assignment of a supplier to furnish a base period volume of 2,700,000 gallons of motor gasoline for a retail outlet which Dividend owns and operates. In its Appeal, Dividend claimed that the November 8, 1977 Order did not take into account the firm's intent to operate a new retail outlet at the site. In rejecting this contention, the DOE pointed out that under the criteria discussed in Ruling 1975-6 and *Red Carpet Car Wash*, 1 DOE Par. 82,530 (1978), a firm which succeeds another firm as the operator at a retail site is not eligible to receive an assignment of supplier and base period volume as a new whole sale purchaser-reseller if it intends to continue to engage in the retail sale of motor gasoline at the site, regardless of any change in the mode of operation. The DOE found that since Dividend has always intended to continue the retail sale of motor gasoline at the site, it failed to qualify as a new retail outlet, despite the conversion of the mode of operation from a full-service facility to a self-service operation. The Dividend Appeal was accordingly denied.

REQUESTS FOR EXCEPTION

*Asiatic Petroleum Corp., New York, New York, DPI-0017*
*Pacific Resources, Inc., Honolulu, Hawaii, DPI-0009*
*Inter-Americas Oil Company, Pittsburgh, Pennsylvania, DPI-0010*
*Roarda, Inc., Washington, D.C., DPI-0011*
*Scanoil, Inc., New York, N.Y., DPI-0012*

Asiatic Petroleum Corporation, Pacific Resources, Inc., the Inter-Americas Oil Company, Roarda, Inc., and Scanoil, Inc. filed Applications for Exception from the provisions of 10 CFR 213.15(c) which, if granted, would result in the issuance of an Order by the DOE authorizing the firms to import additional barrels of residual fuel oil into PAD District I on a fee-exempt basis during the 1978-1979 allocation year. In its Application, Asiatic stated that it expects to exhaust its present fee-exempt authority authorized under Section 213.15 by September 1978. The remaining four firms stated that since they were not importers of residual fuel into District I during 1973, they are not eligible to receive fee-exempt licenses under § 213.15 and therefore must pay license fees for all of the residual fuel oil which they import. All five firms stated that, in contrast, their competitors possess substantial fee-exempt authority under § 213.15. In the consolidated Decision which it issued to the five firms, the DOE noted that significant dislocations in the allocation of fee-exempt authority among importers of residual fuel oil had arisen since the Mandatory Oil Import Program (MOIP) was promulgated in 1973. The DOE also found that the maldistribution of fee-exempt authority to the five applicants threatened the competitive viability of those firms and therefore constituted an exceptional hardship to the firms and an unfair distribution of the burdens generally imposed on importers by the MOIP. Based on these considerations, the DOE concluded that exception relief should be granted. In determining the specific level of relief to be granted to the firms, the DOE noted that the fee-exempt authority mandated under § 213.15 for all importers during the 1978-1979 allocation year represents approximately 81.2 percent of the projected residual fuel imports for all importers for the same period. The DOE found that these five firms should be placed in a similar position and directed that additional fee-exempt licenses be issued in order to raise each firm's fee-exempt authority for the 1978-1979 allocation year to 81.2 percent of its total projected imports for that period.

*Sidney E. Pinkston, Jr., Natchez, Mississippi, DEE-1409, Crude oil*

Sidney E. Pinkston, Jr. filed an Application for Exception from the provisions of 10 CFR, Part 212, Subpart D, which, if granted, would permit the firm to sell the crude oil produced from the U.S.A. No. 1, U.S.A. No. 5, and U.S.A. No. 7 wells located on Lease BLM-A-011586-C in the Beaver Branch Field, Adams County, Mississippi at upper tier ceiling prices. In considering the exception request the DOE found that Pinkston's operating costs had increased to the point where the firm no longer had an economic incentive to continue the production of crude oil from the BLM-A-011586-C

Lease if the crude oil were subject to the lower tier ceiling price rule. The DOE also determined that if Pinkston abandoned its operations at the Lease, a substantial quantity of domestic crude oil would not be recovered. On the basis of criteria applied in previous Decisions, the DOE determined that Pinkston should be permitted to sell 100% of the crude oil produced from the U.S.A. No. 1, No. 5 and No. 7 wells for the benefit of the working interest at upper tier ceiling prices.

*S&W Engine Supply Company, Oklahoma City, Oklahoma, DXE-1472, crude oil*

The S&W Engine Supply Company filed an Application for Exception from the provisions of 10 CFR, Part 212, Subpart D. The request, if granted, would result in the extension of exception relief previously granted to S&W and would permit the firm to sell at upper tier ceiling prices certain quantities of crude oil produced from the Baker Townsend Lease located in Oklahoma County, Oklahoma. *S&W Engine Supply Co.*, 1 DOE Par. 81,123 (1978). In considering the S&W request, the DOE found that the firm had continued to experience operating losses at the Baker Townsend lease despite the exception previously granted. The DOE also found that S&W would have no economic incentive to continue its operations at the Baker Townsend property unless the type of exception relief previously granted were extended for an additional six month period. In view of this situation and on the basis of the operating data which S&W submitted for the most recently completed six-month period, S&W was permitted to sell at upper tier ceiling prices 78.84 percent of the crude oil produced from the Baker Townsend lease for the benefit of the working interest owners through March 31, 1979.

*Tenneco Oil Company, Houston, Texas, DXE-1557, crude oil*

The Tenneco Oil Company filed an Application for Exception from the provisions of 10 CFR, Part 212, Subpart D. The exception, if granted, would result in the extension of relief previously granted and would permit Tenneco to continue to sell certain quantities of the crude oil produced from the South Coast Unit located in St. Mary Parish, Louisiana, at upper tier ceiling prices. In considering the Tenneco exception request, the DOE found that operating costs per barrel at the South Coast Unit continued to exceed the applicable lower tier ceiling price and that exception relief was therefore necessary to provide the firm with an economic incentive to maintain production operations. In accordance with the methodology established in previous Decisons, the DOE permitted Tenneco to sell 74.21 percent of the crude oil produced from the South Coast Unit at upper tier ceiling prices for a six month period of time.

PETITION FOR SPECIAL REDRESS

*Robert B. Sutton, Tulsa, Oklahoma, DSG-0032, DES-0104, crude oil*

Robert B. Sutton filed a Petition for Special Redress which, if granted, would have resulted in the issuance of an order quashing a subpoena that DOE Region VI issued to him on June 30, 1978. Sutton also requested a stay of the provisions of the subpoena pending a final determination on his Petition. In considering the Sutton Petition, the DOE noted that § 205.8(h)(4) of the DOE Regulations sets forth criteria governing the review by the Office of Hearings and Appeals of a Petition in which a firm seeks to quash or modify a subpoena. That Section provides that a preliminary review will be made in order to determine whether a reasonable probability exists that the petitioner will be able to satisfy the criteria for relief. If the Office of Hearings and Appeals determines that a Petition might satisfy those criteria, the Petition will then be considered on its merits. On the other hand, if the determination is made that the Petition fails to meet this threshold standard the Petition will be dismissed. See 41 FR 55322 (December 20, 1976). The DOE reviewed the contentions which Sutton advanced in his Petition and concluded that he had failed to demonstrate that an immediate review was warranted to correct substantial errors of law, to prevent substantial injury to legal rights, or to cure a gross abuse of administrative discretion. The Sutton Petition was therefore dismissed and the Application for Stay was denied.

REQUESTS FOR STAY

*Northland Oil & Refining Company, Tulsa, Oklahoma, DES-0109, crude oil*

Northland Oil & Refining Company requested that its obligation under the provisions of 10 CFR 211.67 (the Domestic Crude Oil Entitlements program) be stayed for the month of October 1978 pending a determination on the merits of an Application for Exception which the firm had filed. In considering the Northland request, the DOE found that the material which the firm submitted made a *prima facie* showing that the firm did not possess the financial resources which would enable it to purchase entitlements during October 1978. Accordingly, the DOE concluded that it was impossible for the firm to purchase entitlements during the month of October 1978. The DOE therefore granted the request for stay pending a determination on the firm's Application for Exception.

*San Joaquin Refinging Company, Newport Beach, California, DES-1049 crude oil*

San Joaquin Refining Company filed an Application for Stay in which it requested that the firm's obligation to purchase entitlements in the amount specified in the Entitlement Notice issued in September 1978 be suspended pending a final determination on an Application for Exception which the firm filed on April 20, 1978. In considering the San Joaquin request, the DOE found that San Joaquin had insufficient amounts of cash and other current assets to satisfy the full amount of its September entitlements purchase obligation. The DOE concluded that the financial material presented by San Joaquin therefore supported the firm's claim that it would suffer a severe and irreparable injury in the absence of a stay. The DOE also noted that there existed a substantial likelihood of success on the merits of San Joaquin's Application for Exception. Accordingly, the DOE granted the request for stay.

REQUEST FOR TEMPORARY STAY

*Continental Oil Company, Houston, Texas, DST-1947, motor gasoline*

The Continental Oil Company filed an Application for Temporary Stay of the requirements of 10 CFR 211.10(b). In its Application, Continental contended that because of an explosion and fire at its Denver, Colorado refinery it was unable to fulfill the allocation obligations imposed by 10 CFR 211.10(b). After considering the Application, the DOE determined that as a result of the explosion and fire it was impossible for Continental to maintain a single allocation fraction for the distribution subsystems served by the firm's Denver, Colorado and Billings, Montana refineries. Therefore, the DOE granted a temporary stay which permitted Continental to use separate allocation fractions for its Denver and Billings customers pending consideration of an Application for Stay which Continental intended to file.

MOTIONS FOR EVIDENTIARY HEARING

*Champlin Petroleum Company, Fort Worth, Texas, DRH-0018, DRX-0115*
*Special Counsel, Washington, D.C., Motor gasoline*

Champlin Petroleum Company filed a Motion for Evidentiary Hearing in connection with its Appeal of a Remedial Order. In its Motion, Champlin designated 49 issues with respect to which the firm wished to present testimony at an evidentiary hearing. In reviewing the Champlin Motion, the DOE noted that a firm seeking an evidentiary hearing must establish that the issues designated in its Motion are relevant to the enforcement proceedings and that the facts that the firm wishes to establish are not susceptible to documentary proof. The DOE noted that a large number of the issues designated in the Champlin Motion did not involve material disputes of a factual nature. In this regard, the DOE found that a number of the firm's assertions had already been accepted by the FEA and referred to in the Remedial Order. The DOE also noted that a number of issues designated by Champlin involved the interpretation of the contents of documents and should be resolved on the basis of those documents.

In its Motion Champlin also stated that it wished to elicit the testimony of various DOE officials regarding circumstances surrounding the preparation and issuance of the Remedial Order and other notices to the firm. The DOE determined that the presentation of this type of evidence was barred by the testimonial privilege recognized by the United States Supreme Court in *Citizens to Preserve Overton Park v. Volpe*, 401 U.S. 402 (1971). Under that privilege, the oral testimony of agency officials may be elicited by parties affected by agency action only in unusual circumstances. Where administrative findings were made contemporaneously with the agency action challenged, there must be a strong showing of bad faith or improper behavior on the part of agency officials before inquires may be made as to their mental processes in formulating agency action. The DOE determined that Champlin failed to make any preliminary showing that bad faith existed or that contemporaneous findings were not made.

The DOE also rejected Champlin's request to present testimony regarding alleged *ex parte* contacts involving the agency's enforcement personnel and individuals representing one of the firm's customers. The DOE concluded that no impropriety was committed even if the alleged *ex parte* contacts were made since the alleged contacts were with enforcement personnel

acting in a prosecutorial capacity. The DOE further noted that even if the alleged *ex parte* contacts had been improper, Champlin was receiving an independent review of the Remedial Order before the OHA. In view of Champlin's failure to demonstrate the existence of any material factual dispute that was not susceptible to disposition on the basis of documentary proof, the Champlin Motion for Evidentiary Hearing was denied.

The DOE also considered the Motion of the Office of Special Counsel to strike from the administrative record excerpts of a deposition of a DOE official which were included in the Champlin submissions. The DOE determined that Special Counsel failed to make a showing that it would be prejudiced by the admission of that evidence into the record, and the Special Counsel's Motion to Strike was denied.

*Petroleum Management, Inc., Corpus Christi, Texas, DRH-0015, crude oil*

Petroleum Management, Inc. filed a Motion for Evidentiary hearing in connection with its Statement of objections to a Proposed Remedial Order which was issued to the firm by DOE Region VI on May 23, 1978. In the Proposed Remedial order, Region VI found that during the period from September 1, 1973 through December 31, 1975, PMI's Fred Blundell No. 5 Well produced only natural gas and natural gas condensate. In its Motion for Evidentiary Hearing, PMI stated that it intended to present testimonial evidence and supporting documents in support of its position that his finding was incorrect and that the well in fact produced crude oil during the audit period. In considering PMI's Motion, the DOE determined that there was a substantial dispute as to the nature of the liquids produced from the Fred Blundell No. 5 Well during the audit period. The DOE also determined that this factual dispute was central to the question of whether or not PMI engaged in practices which violated the price regulations. Moreover, the DOE concluded that because the credibility of PMI's witnesses was certain to be a critical factor in the DOE's decision with respect to this dispute, it was desirable that the DOE have the opportunity to observe the demeanor of PMI's witnesses and consider the veracity of their statements as they presented evidence and responded to cross-examination. Accordingly, the PMI Motion for Evidentiary Hearing was granted.

DISMISSALS

The following submissions were dismissed following a statement by the applicant indicating that the relief requested was no longer needed:

*Amerada Hess Corporation, New York, New York, DEE-0858*
*Homer Moore, Baton Rouge, Louisiana, DEE-1068*
*Texas City Refining, Inc., Washington, D.C., DSG-0033*

The following submissions were dismissed on the grounds that recent regulatory changes have eliminated the need for the exception relief requested:

*Getty Oil Company, Los Angeles, California, DEE-1702 through DEE-1706*
*Hunt Petroleum Corporation, Dallas, Texas, DXE-1864*
*Texas Pacific Oil Company, Inc., Dallas, Texas, DXE-1878 through DXE-1880*

Copies of the full text of these Decisions and Orders are available in the Public Docket Room of the Office of Hearings and Appeals, Room B-120, 2000 M Street, N.W. Washington, D.C. 20461, Monday through Friday, between the hours of 1:00 p.m. and 5 p.m., e.s.t., except Federal holidays. They are also available in *Energy Management: Federal Energy Guidelines*, a commercially published loose leaf reporter system.

MELVIN GOLDSTEIN,
*Director, Office of Hearings and Appeals.*

JANUARY 12, 1979.

[Fr Doc. 79-1763 Filed 1-17-79; 8:45 am]

---

[6450-01-M]

## ISSUANCE OF DECISIONS AND ORDERS

**Week of October 16 through October 20, 1978**

Notice is hereby given that during the week of October 16 through October 20, 1978, the Decisions and Orders summarized below were issued with respect to Appeals and Applications for Exception or other relief filed with the Office of Hearings and Appeals of the Department of Energy. The following summary also contains a list of submissions which were dismissed by the Office of Hearings and Appeals and the basis for the dismissal.

APPEALS

*Como Gas Sales Company, Inc., Duluth, Minnesota, DRA-0085 propane.*

Como Gas Sales Company, Inc. appealed from a Remedial Order which the Department of Energy Region V Office issued to the firm on November 4, 1977. In the Remedial Order, the DOE found that Como had sold propane to its customers at prices which exceeded the maximum permissible levels computed pursuant to 6 CFR 150.359 and 10 CFR 212.93. In its Appeal, Como contended that its 20-lb. and 30-lb. propane cylinder transactions should be eliminated from the Regional Office's audit because they constituted a service rather than sales of a covered petroleum product and because it was impossible for the DOE to correctly calculate the amount of any violation which occurred. Como further challenged the manner in which the Regional Office had calculated Como's cost of product in inventory on May 15, 1973. In addition, Como challenged the application to it of the firmwide inventory requirement and the equal application rule. Como also asserted that DOE representatives had led the firm to believe that its pricing methods were correct and that netting, or subtraction of undercharges from overcharges, would be permissible if any overcharges were found to have occurred. Finally, Como sought an exception which, if granted, would have permitted the firm to retroactively calculate its selling prices on a separate inventory basis.

In considering Como's contentions with respect to its cylinder transactions, the DOE noted that a firm cannot avoid the applicability of the Price Regulations by the manner in which it characterizes its business activities. The DOE further determined that it would be inappropriate to relieve a firm of liability for compliance with the Price Regulations on the basis of an argument that it was impossible for the DOE to calculate correctly the amount of the violation, particularly when the firm had made no effort to comply with the Price Regulations with respect to the transactions involved and had not maintained records to show the quantity of product sold during the audit period. With respect to the application of the firmwide inventory requirement to Como, the DOE initially noted that in prior cases the FEA has stated that prior to May 1, 1976 a reseller or retailer was required to calculate its increased product costs on a firmwide basis. However, because the Office of Enforcement is apparently giving some further consideration to this issue, the DOE remanded the matter for further consideration.

In addition, the DOE found that the record was insufficient to enable it to assess the validity of Como's claim that the Regional Office had incorrectly calculated the firm's May 15, 1973 cost of product in inventory. Accordingly, the DOE determined that the Remedial Order should be remanded for further findings and conclusions regarding this issue. With respect to Como's argument that it had relied on the advice of DOE representatives, the DOE found that Como had not established that the DOE representatives had approved any specific pricing practice such as netting or the use of separate inventory accounting. Moreover, the DOE noted that Como had not shown that it actually established its prices on the basis of incorrect oral advice received from IRS and FEA representatives. In considering Como's netting argument, the DOE noted that netting is not permitted unless a firm convincingly demonstrates that it reduced its prices for the sole purpose of making restitution for previous overcharges. The DOE determined that Como had not made the proper showing. With respect to Como's request for a retroactive exception, the DOE found that the firm had failed to make a *prima facie* showing that exception relief should be granted, and consequently had failed to demonstrate that an exception should be granted in the context of its Appeal of the Remedial Order. On the basis of the foregoing considerations, Como's Appeal was granted in part and the Remedial Order was remanded for further findings.

*Fuel Distributors, Inc., Temple, Texas, DFA-0213, Freedom of Information*

Fuel Distributors, Inc. (Fuel) appealed from a partial denial by the Director of the Division of Freedom of Information and Privacy Activities of the Department of Energy (the FOI Director) of a request for information which the firm had filed pursuant to the Freedom of Information Act (FOIA). In its request, Fuel requested records related to a DOE investigation and audit of Foremost Petroleum Corporation, Inc. In his initial determination the FOI Director released six documents to Fuel and withheld 93 documents which were within the scope of the firm's request. On appeal Fuel requested that the DOE release 25 of the 93 documents which the FOI Director had

withheld from the firm. In considering the appeal, the DOE found that 13 of those 25 documents were a part of an ongoing investigation of the pricing practices of Foremost Petroleum Corporation, Inc. and that release of those documents could seriously affect that investigation in an adverse manner. The DOE also found that nine documents contained confidential proprietary information and were therefore properly withheld from Fuel pursuant to exemption 4 of the FOIA. In addition, the DOE found that four documents contained significant substantive content which was a part of the decisionmaking process of the agency and that those documents were therefore properly withheld from Fuel pursuant to exemption 5 of the FOIA. Finally, the DOE determined that two documents and the routing slips attached to three documents should have been released to Fuel after material which is exempt from the mandatory public disclosure provisions of the FOIA had been segregated and withheld.

*Petroleum Management, Inc., Wichita, Kansas, FRA-1311 crude oil*

Petroleum Management, Inc. (PMI) appealed from a Remedial Order which was issued to it on April 27, 1979. In the Remedial Order, the DOE found that PMI had sold the crude oil produced from 12 leases as "stripper well crude oil" when those properties did not qualify for stripper well status during periods of time from November 16, 1973 through December 31, 1974. As a result of these findings, the Remedial Order directed PMI to refund the overcharges to the six purchasers of the crude oil. In considering the Appeal, the DOE rejected PMI's contention that injection wells should be included for purposes of determining eligibility of a property for stripper well status. The DOE also concluded that the record indicated that the production of crude oil from several of the properties was not maintained at maximum feasible rates and that the Regional Office had therefore acted properly in adjusting the calculations of average daily production from the Sutley and Barney-Morgan properties to reflect the disruptions in production that these properties to reflect the disruptions in production that these properties had experienced during 1973. However, the DOE determined that the Regional Office appeared to have correctly calculated the average daily porduction from the Krug Lease, and the property may have properly been entitled to stripper well status. Moreover, the DOE also concluded that the payment mechanism utilized by the Koch Oil Company for certain crude oil produced from the Palmer C Lease during December 1973 appears to have been appropriate. Accordingly, those portions of the Remedial Order were remanded to the Director of Enforcement of Region VII for further consideration of the issues involved. In all other respects, the Appeal filed by PMI was denied.

*True Oil Purchasing Company, Casper, Wyoming, DFA-0215, freedom of information*

True Oil Purchasing Company (True) filed an Appeal from an Order which the Director of the DOE Division of Freedom of Information and Privacy Act Activities (the Director) issued to the firm on August 14, 1978. In that Order the Director denied in part a Request for Information which True had filed under the Freedom of Information Act, 5 U.S.C. 552 (the Act), as implemented by the DOE in 10 CFR, Part 202. In its Appeal, True argued that a document which was found to be within the scope of the firm's request but which was withheld by the Director pursuant to 5 U.S.C. 552(b)(5) (Exemption 5) should be disclosed. Exemption 5 generally exempts from the mandatory disclosure provisions of the Act documents which are part of the agency's predecisional deliberative processes. See *Exxon Co., U.S.A*, 2 DOE Par. — (November 1, 1978) and cases cited therein. In considering the Appeal, the DOE determined that the document in question which is a draft Notice of Proposed Rulemaking had been properly withheld under Exemption 5 in accordance with previous DOE decisions. *See Shank, Irwin, Conant, Williamson, and Grevelle*, 1 DOE Par. 80,209 (1977). The firm also appealed a determination by the Director that portions of the firm's request for information did not reasonably describe the records sought. Since the firm failed to demonstrate that this aspect of the Director's determination constituted a gross abuse of administrative discretion, the DOE dismissed this aspect of the firm's appeal in accordance with the principles of a recent decision. *See Andrews, Kurth, Campbell and Jones*, 2 DOE Par. — (September 28, 1978). Finally, the DOE determined that a document which was within the scope of the firm's request but which had not yet been released to the firm should be released since it did not contain any material which is exempt from mandatory disclosure under the Act.

PETITION FOR SPECIAL REDRESS

*Marathon Oil Company, Findlay, Ohio, DEH—0030, DSG—0030, DES—0103, crude oil*

Marathon Oil Company filed a Petition for Special Redress, a Motion for Evidentiary Hearing, and an Application for Stay. In its Petition for Special Redress, the firm requested that an order be issued (i) directing the Special Counsel of the Department of Energy to refrain from reviewing a subpoena which was issued to Marathon by the Deputy Special Counsel on December 13, 1977, and (ii) designating another DOE official to conduct that review. The Application for Stay sought to restrain the Special Counsel from review of the subpoena until a determination was reached concerning the Petition for Special Redress. Marathon based its requests upon a contention that the Special Counsel was not the appropriate offical to review the December 13 subpoena because of his alleged involvement in its issuance. In considering Marathon's application for Stay, the DOE found that Marathon failed to make any showing that an irreparable injury to the firm was imminent or that it would experience a serious hardship or gross inequity if its Application for Stay was denied. The DOE found that since the Special Counsel might designate another DOE official to review the subpoena or might modify or rescind the subpoena, Marathon's contention that it would experience an irreparable injury in the absence of stay relief was without merit. In addition, the DOE noted that in any event Marathon could obtain review of the Special Counsel's determination by the DOE Office of Hearings and Appeals under § 205.8(h)(4). Inasmuch as Marathon failed to make a showing of an imminent irreparable injury resulting from the normal operations of the subpoena review regulations, the DOE determined that a Stay was not warranted and that, for the same reason, the Petition for Special Redress was premature. Accordingly, Marathon's Application for Stay was denied and its Petition for Special Redress was dismissed. The firm's Motion for Evidentiary Hearings was also dismissed on the ground that the subpoena review regulations make no provision for evidentiary hearings.

REQUESTS FOR EXCEPTION

*Damson Oil Company, Houston, Texas, DXE—1607, curde oil*

Damson Oil Company filed an application for Exception from the provisions of 10 CFR, Part 212, Subpart D. The exception request, if granted, would result in an extension of the exception relief previously granted to Damson and would permit the firm to continue to sell a portion of the crude oil produced from the Venice Beach lease at upper tier ceiling prices. *Damson Oil Co.*, 1 DOE Par. 81,101 (1978). In considering the exception application, the DOE found that in the absence of exception relief the working interest owners would lack an economic incentive to continue to produce crude oil from the property. In view of this determination, and on the basis of operating data which Damson had submitted for the most recently completed fiscal period, the DOE concluded that Damson should be permitted to sell 74.15 percent of the crude oil produced from the Venice Beach lease for the benefit of the working interest owners at upper tier ceiling prices. On September 26, 1978, Damson filed a Statement of Objections citing an alleged error in the effective date of the relief proposed in the Proposed Decision and Order. After reviewing the Damson submission, the DOE concluded that Damson was correct. Accordingly, Damson was permitted to sell at upper tier ceiling prices 74.15 percent of the crude oil produced from the Venice Beach Lease for the benefit of the working interest owners from September 1, 1978 to February 28, 1979.

*H & K Oil Company, Yankton, South Dakota, DRC-0012, No. 2 fuel oil*

H & K filed a statement of Objections relating to a Proposed Decision and Order that DOE Region VIII issued to the firm on January 13, 1978. In that determination, Region VIII tentatively concluded that H & K's request for exception relief from the provisions of 10 CFR 212.93 should be denied. The exception request, if granted, would have permitted H & K to retain revenues which it realized during the period November 1, 1973 through December 31, 1974 as a result of charging the University of South Dakota prices for No. 2 fuel oil which exceeded maximum permissible levels. In considering that request, the DOE applied the standard which is generally applied to requests for retroactive exception relief. *Marvin E. Boyer Co., Inc.*, 3 FEA Par. 83,088 (1978). Under that standard and on the basis of the financial material submitted by H & K, the DOE found that the firm had not shown that either an irreparable injury existed or compelling reasons were present which justified the approval of retroactive exception relief. In fact, the DOE found that H & K had realized increasing profits since 1973. Under these circumstances, the DOE concluded that retroactive exception relief was not warranted, and the

H & K Application for Exception was denied.

*Kewanee Oil Company, Tulsa, Oklahoma, DXE-1288 crude oil*

Kewanee Oil Company filed an Application for exception from the provisions of 10 CFR, Part 212, Subpart D. The exception request, if granted, would result in an extension of the exception relief previously granted to Kewanee and would permit the firm to sell a portion of the crude oil produced from the South Stanley Lease at upper tier ceiling prices. In considering the Kewanee exception application, the DOE determined that the Kewanee firm had been acquired by the Gulf Oil Corporation (Gulf) and that Gulf, rather than Kewanee, should have filed the exception application. However, the DOE also determined that the financial material which Kewanee submitted for a recent six-month period covered a period in which Kewanee continued as the operator of the property. The DOE also found that the working interest ownership of the property continued at the same level as under Kewanee's ownership and that it did not appear that the manner in which Gulf accounted for the operations was different from the manner in which Kewanee had accounted for them. Accordingly, the DOE determined that the exception proceeding should not be dismissed. Based on the current financial and operating data furnished for the property, the DOE concluded that exception relief should be continued so the firms would have an economic incentive to produce the crude oil involved. The DOE therefore granted Kewanee and Gulf exception relief which permits them to sell 41.18 percent of the crude oil produced from the South Stanley Lease during a six-month period for the benefit of the working interest owners at upper ceiling prices.

*Monsanto Company, Winkler County, Texas, DXE-1115, crude oil*

The Monsanto Company (Monsanto) filed an Application for Exception from the provisions of 10 CFR, Part 212, subpart D which, if granted, would permit Monsanto to sell the crude oil which it produces from the Hendrick "C" Property at upper tier ceiling prices. In considering the exception request, the DOE found that Monsanto continued to incur per barrel operating costs for the Hendrick "C" Property which were in excess of the lower tier ceiling price the firm was permitted to charge pursuant to Subpart D and that in the absence of continued exception relief, the working interest owners would lack an economic incentive to continue production of crude oil from the property. In view of this situation and on the basis of the operating data presented for the property for the preceding six months, the DOE issued a Proposed Decision and Order in which it concluded that the working interest owners should be permitted to sell 48.5 percent of the crude oil produced from the property at upper tier ceiling prices in order to recover the increased operating costs of the property. On July 25, 1978, Monsanto filed a Statement of Objections in which the firm asserted that the amount of relief specified in the Proposed Order was inadequate because it was based in part upon monthly operating results which were anomalous. In considering Monsanto's arguments, the DOE determined that the impact of any anomalous production period was minimized or eliminated as a result of the DOE's consideration of operating results from an entire six month period. Accordingly, on October 16, 1978, the DOE issued the Proposed Order in final form without modification.

*Phillips Petroleum Company, Bartlesville, Oklahoma, DEE-0386, crude oil*

The Phillips Petroleum company (Phillips) filed an Application for Exception from the provisions of 10 CFR 212.73. The exception request, if granted, would permit Phillips to sell a sufficient protion of the crude oil produced from the Bridger Lake Unit located in Summit County, Utah, at upper tier ceiling prices to generate revenues that would contemporaneously offset the projected cost of injecting natural gas into the underlying reservoir. Phillips claimed that natural gas is required to be injected into the reservoir in order to maintain the miscibility pressure of the Unit prior to the implementation of a major secondary recovery project at the Unit. Phillips further alleged that unless a level of revenues which would contemporaneously offset the cost of injecting the gas were achieved, the firm would cancel its plans to implement the secondary recovery project and large volumes of otherwise recoverable crude oil would be permanently lost. After consideration of the projected cost of the injection gas and the magnitude of the volume of crude oil that could be produced if the firm actually proceeded with the planned secondary recovery project, the DOE found that Phillips would have sufficient incentive to purchase and inject the natural gas if the firm was permitted to recover the increased operating costs per barrel that it actually incurred at the Unit since May 15, 1973. Since Phillips could recover the cost of injecting the natural gas after it had actually been incurred through subsequent exception requests the DOE concluded that there was no need to permit Phillips to recover the projected cost of the injection gas contemporaneously with the expenditures for that gas in order to provide the firm with an incentive to undertake the project. Consequently, the DOE granted Phillips permission only to increase the price of the crude oil produced from the Unit in order to recover the increased operating cost per barrel which it actually had incurred since May 15, 1973.

*Phillips Petroleum Company, Bartlesville, Oklahoma, DXE-1554, crude oil*

Phillips Petroleum Company filed an Application for Exception from the provisions of 10 CFR, Part 212, Subpart D. The exception request, if granted, would result in the extension of exception relief previously granted to Phillips and would permit the firm to continue to sell a portion of the crude oil produced from the Foote Lease, located in Oklahoma County, Oklahoma, at upper tier ceiling prices. In considering the exception application, the DOE found that Phillips had continued to incur increased operating expenses at the Foote Lease and that, in the absence of exception relief, the working interest owners would lack an economic incentive to continue to produce crude oil from the property. In view of this determination and on the basis of the operating data which Phillips had submitted for the most recently completed fiscal period, the DOE concluded that exception relief should be continued permitting Phillips to sell at upper tier prices 90.98 percent of the crude oil produced at the Foote Lease for the benefit of the working interest owners.

*Phillips Puerto Rico Core, Inc., Puerto Rico Sun Oil Company, Commonwealth Oil Refining Company, Inc., PPG Industries, Inc., and Puerto Rico Olefins Company, Washington, D.C., DPI-0002, DEE-0392, DXE-0611, DPI-0006, naphtha crude oil*

This proceeding involved several Applications for Exception filed by firms that maintain refineries or petrochemical plants in Puerto Rico. Commonwealth Oil Refining Company, Inc. (Corco), Phillips Puerto Rico Core, Inc. (Phillips) and the Puerto Rico Olefins Company (PRO), a subsidiary of PPG Industries, requested exception relief from the license fee provisions of the Mandatory Oil Import Program contained in 10 CFR, Part 213. Corco and the Puerto Rico Sun Oil Company (Sun) requested exception relief from certain provisions of the Old Oil Entitlements Program.

After reviewing the material submitted by Corco, PRO and Phillips, the DOE determined that the firms should be granted exception relief from the license fee provisions. The DOE noted that in a previous case, the Federal Energy Administration had granted similar exception relief to Corco based in part on the firm's deteriorating financial condition, and on the fact that due to competitive conditions, the firm was not able to pass through to its customers the additional costs associated with license fees. The relief granted in that case was also based on the finding that adequate domestic supplies of crude oil and naphtha were not available to Corco at competitive price levels as a result of the Jones Act requirements and the fact that the Corco facilities are located in Puerto Rico. *Commonwealth Oil Refining Co., Inc.*, 5 FEA Par. 83,132 (1977). Based on information submitted by Corco, the DOE determined that these conclusions were still valid, and that the firm, now in bankruptcy, was experiencing even more serious financial difficulties. Accordingly, Corco was granted exception relief permitting it to import all of its expected crude oil and naptha feedstock needs for the current allocation period on a fee-exempt basis. It was also found that PRO was subject to the same economic factors which affect Corco and was experiencing serious financial difficulties. Consequently, PRO was also granted exception relief permitting it to import its expected naphtha, raffinate and gas oil feedstock needs for the current allocation period on a fee-exempt basis. The DOE further determined that as a result of this Decision and the existence of long-term allocations and other regulatory fee-exempt allocations, all of the refiners and petrochemical plants located in Puerto Rico will have substantial fee-exempt authority except for Phillips. The DOE concluded that since Phillips has no ongoing fee-exempt authority on a permanent basis, the firm is subject to a substantial competitive disadvantage. Consequently, Phillips was also granted exception relief permitting it to import its expected naphtha feedstock needs for the current allocation period on a fee-exempt basis. Phillips was also granted limited retroactive exception relief from the license fee provision due to administrative delay in reaching a decision on the merits of its request.

The DOE also pointed out that other factors supported the approval of the exception relief from the license fee program

granted to Corco, PRO and Phillips. The agency noted that each of the firms had constructed facilities in Puerto Rico that were dependent on foreign feedstocks largely as a result of incentives provided by the Federal and Puerto Rican Governments. It also found that since the firms generally had no feasible alternative to the use of imported feedstocks the license fee, which was designed to discourage the use of imported crude oil and petroleum products, did not serve its intended function with respect to these firms and exacerbated the competitive disadvantages already being experienced by the firms.

The DOE also concluded that Corco and Sun should be granted exception relief from the provisions of 10 CFR 211.67(i)(4) of the Old Oil Entitlements Program. In this regard, the DOE noted that the purpose of that provision was to provide a cost advantage for refiners who process domestic crude oil over those who process imported crude oil. It was determined that this objective is not met by the application of § 211.67(i)(4) to Corco and Sun since under provisions of the Jones Act neither of the firms has an economic incentive to process domestic crude oil. The DOE reiterated that these firms initially relied on incentives provided by the Federal and Puerto Rican Governments to locate facilities in Puerto Rico, but now were experiencing competitive cost disadvantages as a result of the Jones Act and changes in the economic climate. In addition, the DOE determined that a denial of exception relief could have a potentially significant adverse impact on the economy of Puerto Rico. Based on these factors, the DOE granted Corco and Sun exception relief for specified periods to eliminate the cost disadvantage which accrues to the firms under the entitlements program as a result of their use of imported crude oil feedstocks.

After reviewing the material submitted by Corco, the DOE also concluded that the firm should be granted exception relief from the provision of 10 CFR 211.67(d)(5). Under that provision, the level of entitlements benefits which a Puerto Rican firm receives for the naphtha which it imports for use as feedstock in its petrochemical plant is based on the weighted average cost of all naphtha imported into Puerto Rico for use as a petrochemical feedstock. The DOE noted that in a previous decision, the FEA found that Corco's weighted average cost of imported naphtha was significantly in excess of the weighted average cost of imported naphtha for all of Puerto Rico. In view of this finding and the financial difficulties being experienced by Corco, the FEA concluded that exception relief, from the provisions of § 211.67(d)(5) should be granted, permitting the firm to substitute its actual cost of naphtha for purposes of applying the formula set forth in that section. *Commonwealth Oil Refining Co., Inc., supra.* The DOE found that because Corco's financial condition continued to be precarious and its weighted average cost of imported naphtha still exceeded the weighted average cost for all of Puerto Rico, the exception relief previously approved should be continued until September 30, 1979.

The DOE also determined that exception relief from the equal application rule, 10 CFR 212.83(h), which had previously been granted to Corco and Phillips should also be granted to Sun and PRO. The DOE noted that the purpose of the rule was to preserve existing price differentials which are the basis of the class of purchaser concept. As a result of the provisions of the equal application rule, a refiner which passes through different amounts of increased costs to different classes of purchaser is not permitted to "bank" for recovery in future months the costs which it failed to reflect in the lower prices charged to certain classes of purchaser. The DOE determined that the equal application rule may not serve any useful purpose when applied to Puerto Rico and instead functions to inhibit the passthrough in Puerto Rico of costs incurred by refiners operating only in Puerto Rico. Consequently, exception relief was approved permitting all of the firms involved in this proceeding to reflect in the prices which they charge for petroleum products sold in Puerto Rico the actual cost increases incurred in their Puerto Rican refining and marketing operations.

Finally, the DOE noted that several firms had filed submissions objecting to the Proposed Decision and Order which was issued in this proceeding. Corco objected to certain procedures attached to the exception relief from the entitlements program which had been tentatively approved. The procedures generally permitted Corco to sell entitlements pursuant to the exception only if it takes appropriate measures to ensure that the revenues generated from such sales are used only to meet current expenses of the firm. The DOE noted that these procedures were the subject of ongoing discussions between Corco and the DOE, and that in order to avoid any delay in this proceeding, the procedures should be adopted in the final Decision issued in this matter. However, the DOE stated that if new procedures were ultimately approved as a result of the negotiations with Corco, a Supplemental Order will be issued to conform the procedures adopted in this Decision with the new procedures. Several other firms argued that the exception relief fromthe license fee program which had been tentatively approved was intended to alleviate general economic problems facing Puerto Rico and the Puerto Rican refining and petrochemical industries, and was thus more properly the subject of a rulemaking proceeding. In rejecting this argument, the DOE determined that the approval of this exception relief was designed to mitigate the impact of specific DOE regulatory provisions which under the unique circumstances involved produced an inequity to the Puerto Rican firms and economy.

The DOE also rejected the contention advanced by several firms that relief from the regulatory provisions involved in this proceeding should be considered for all refiners through the regulatory process. The DOE determined that the inequity being experienced by Puerto Rican refiners and petrochemical manufactures is unique, and that the allegation that a larger problem exists should not restrict the agency from addressing specific inequities presented to it in individual applications for exception. Several firms also contended that the exception relief proposed would adversely affect every other refiner in the United States to some extent. The DOE stated that this argument had been fully considered, and that various factors favoring exception relief were more compelling. Lastly, Sun stated that it was now processing substantial quantities of Alaskan North Slope (ANS) crude oil in its Puerto Rican refinery, and requested additional exception relief from the entitlements penalty on that crude oil, which is identical to the penalty on foreign crude oil. The DOE determined that it would be anomalous if this entitlements penalty were not removed, since it would encourage Sun and other Puerto Rican refiners to use imported crude oil rather than ANS crude oil. Accordingly, both Sun and Corco were granted exception relief until September 30, 1979 relieving them of the cost disadvantage mandated under § 211.67 (i) (4) with respect to ANS crude oil.

*Total Petroleum, Inc., Apco Oil Corporation, Oklahoma Refining Corporation, Washington, D.C., FEE-4753, FEE-4774, FEE-4832, crude oil and refined petroleum products*

On February 6, 1977, the DOE issued a Proposed Decision and Order to Total Petroleum, Inc., Apco Oil Corporation, and Oklahoma Refining Corporation in which the DOE proposed to grant exception relief to facilitate Apco's sale to Total and ORC of two refineries located in Arkansas City, Kansas and Cyril, Oklahoma. As a condition of receiving relief, the DOE proposed to limit the entitlements which ORC may earn under 10 CFR 211.67(e) (the small refiner bias) to the benefits which Apco would have earned if it did not sell the facility. Apco and ORC objected to that limitation. In considering their contentions, the DOE observed that the agency's Economic Regulatory Administration (ERA) had recently indicated that it was reassessing the propriety of the small refiner bias. The DOE had as a result determined that exception relief in cases involving refinery acquisitions should not be conditioned upon the continuation of the level of small refiner bias that existed prior to the refinery sale. *Dorchester Gas Corp.; American Petrofina, Inc.*, 2 DOE Par. 81,048 (1978). On the basis of the precedent established in *Dorchester/Fina*, the DOE concluded that the parties to the Apco/ORC/Total refinery transfers should be permitted to receive the full measure of entitlement benefits calculated pursuant to the provisions of § 211.67(2).

In its Statement of Objections to the February 6 Proposed Decision, ORC also requested that the DOE permit the firm to calculate its increased product and nonproduct cost on the basis of the actual purchase price of Apco's inventory at the Cyril refinery. The DOE found that this method of calculating costs could result in a misallocation of costs between the cost of inventory and the costs of the refinery itself. The DOE therefore concluded that the method indicated in the February 6 Proposed Decision, which would instead require ORC to assume Apco's actual costs of the inventory purchased, would result in a more consistent application of § 212.83 and would prevent the sudden and unwarranted price variations which might result from using a negotiated price for Apco's inventory on the date of the sale of the Cyril refinery.

The DOE issued a Decision and Order which finalized the proposed determination except as noted above.

REMEDIAL ORDERS

*Drew Cornell, Inc., Lafayette, Louisiana, DRO-0003, crude oil*

Drew Cornell, Inc. objected to a Proposed Remedial order which the DOE Region VI Office issued to the firm on January 27,

1978. In the Proposed Remedial Order the Regional Office found that during the period September 1, 1973 through June 30, 1976, Cornell erroneously treated the V. Boagni and V. Boagni "C" leases as two separate "properties" as that term is defined in 6 CFR 150.354(b) and 10 CFR 212.72, and as a result had sold crude oil produced from the leases at unlawful price levels. The Proposed Remedial Order therefore directed Cornell to refund to the purchaser the full amount of the overcharges, plus interest. In considering Cornell's objections the DOE noted that the definition of the term "property" which was applicable during the period of the alleged overcharges was based exclusively upon the right to produce crude oil conveyed by the governing oil and gas lease or other instrument. The DOE therefore determined that the execution of a new lease covering a portion of a premises subject to an already existing right to produce does not create a new property with a separate BCPL of zero. The DOE also found that, contrary to the contentions advanced by Cornell, the circumstances surrounding crude oil production at the V. Boagni and V. Boagni "C" leases are readily distinguishable from the special cases identified in Rulings 1977-1 and 1977-2 in which separate property treatment for portions of premises subject to a single right to produce would be permitted. The DOE additionally rejected Cornell's contentions that the interest payments required by the the Proposed Remedial Order were excessive and punitive in nature. Finally, with respect to Cornell's claim that it should not be held liable for the entire amount of overcharges since its working interest in the property is only 2.7 percent, the DOE determined that the objective of compensating the purchaser for the overcharges might well be frustrated if Cornell were required to meet the full refund requirement of the Proposed Remedial Order. Consequently, the DOE remanded the Proposed Remedial Order to the Regional Director of Enforcement of Region VI with instructions to formulate a price reduction arrangement under which each working interest owner will bear its proportionats share of the refund burden.

*Norco Oil Company, Cheboygan, Michigan, DRO—0064, DRH-0064*

Norco Oil Company filed a Statement of Objections and a Motion for Evidentiary Hearing in connection with a Proposed Remedial Order which DOE Region V issued to the firm on March 20, 1978. After reviewing the Norco submissions, the DOE determined that additional information was necessary. Norco failed, however, to respond to numerous requests that it submit the additional information. The DOE therefore determined that the Statement of Objections and the Motion for Evidentiary Hearing should be dismissed with prejudice. Accordingly, the Proposed Remedial Order was issued as a final Remedial Order of the Department of Energy.

In the following case involving a Proposed Remedial Order, no Statement of Objections was filed. The DOE therefore issued the Remedial Order in final form.

*Selby Williams, Piketon, Ohio, DRW-0001*

REQUEST FOR MODIFICATION AND OR RESCISSION

*Sun Company, Inc., Dallas, Texas, DMR-0018, natural Gas*

The Sun Company, Inc. filed an Application for Modificiation or Rescission of a Decision and Order which was issued by the DOE to the firm on February 27, 1978. *Sun Co., Inc.*, Case No. DEE-0068 (Unreported Decision issued February 27, 1978). In that Decision, the DOE granted Sun an exception to 10 CFR 212.165 and permitted it to increase prices for natural gas liquids to reflect the increased non-product costs which the firm incurred at its Putnam-Oswego natural gas processing plant. The firm stated in its Application for Modification that in January 1978 the Putnam-Oswego plant was converted from the production of natural gas liquids (NGL's) to the production of natural gas liquid products (NGL products). The firm contended that since 10 CFR 212.165 limited to $.005 per gallon the amount of non-product costs associated with the production of NGL's which a firm may automatically pass through to its customers in the form of higher prices, and since the non-product cost passthrough provided for NGL products is only $.00375 per gallon, the firm was entitled to modification relief which would permit it to charge an additional $.00125 per gallon for the NGL products produced at the Putnam-Oswego plant since January 1978. In support of its contention, the firm stated that the Mobil Oil Corporation, the operator of Sun's plant, failed to notify Sun that the plant had been converted to NGL products. Sun contended that it had met the criterion of significantly changed circumstances set forth in 10 CFR 205.135(b) and that a modification should therefore be granted. In rejecting that contention, the DOE stated that any firm which seeks exception relief is under an affirmative duty to take all necessary steps to ensure that all factual representations made in support of an exception request accurately reflect the current situation of the firm. The DOE found that Sun had failed to make the showing necessary to qualify for modification relief under the criterion of significantly changed circumstances since the firm could easily have taken steps to inform itself of the conversion of its plant and to inform the DOE accordingly. Sun's Application for Modification was therefore denied.

REQUEST FOR STAY

*Texas City Refining, Inc., Texas City, Texas, DES-0105 crude oil*

Texas City Refining, Inc. (TCR) filed an Application for Stay in which it requested that it be relieved of any obligation to purchase entitlements during the months of September through November 1978. On September 22, 1978, the DOE issued a Decision and Order to TCR in which it denied the firm's initial request for a stay of its entitlement purchase obligation during these months. In its second Application for Stay, TCR presented updated financial information and argued that this material demonstrated that it would incur an irreparable injury in the absence of a stay. In considering the TCR request, the DOE concluded that the financial difficulties being experienced by the firm were not primarily attributable to DOE regulations. In view of this finding, the DOE concluded that only a very strong showing that the firm had made a diligent effort to minimize its cash flow problem before requesting assistance from the DOE would justify the approval of the requested stay. The DOE concluded that TCR had not made that showing. In reaching this conclusion, the DOE found that TCR had made a discretionary business decision to incur a sizable loss on the sale of motor gasoline to its parent corporations prior to restoring its refinery to normal operation. The DOE also found that TCR had placed an additional strain on its financial resources by electing to expand immediately its refining capacity even though its cash position had significantly worsened as a result of the refinery fire. In addition, the DOE observed that TCR had made virtually no effort to obtain funds from its parent corporations even though the record indicated that those firms had a strong vested interest in the continuation of operations by their subsidiary. Finally, the DOE concluded that TCR had not satisfied any of the criteria for a stay set forth in Part 205 of the DOE Procedural Regulations. Accordingly, the TCR request was denied.

MOTION FOR EVIDENTIARY HEARING

*Valley Oil Corporation, Staunton, Virginia, DEH-0119 motor gasoline*

Valley Oil Corporation (Valley) filed a Motion for Evidentiary Hearing in which it requested that an evidentiary hearing be convened in connection with the DOE's consideration of a Statement of Objections to a Proposed Exception Decision and Order issued to the firm on March 10, 1978. In its Motion Valley requested that it be permitted to present witnesses to testify that the DOE's regulations were ambiguous and that it received contradictory guidance from agency officials regarding the proper method of calculating its cost of product in inventory. In considering the Valley request, the DOE found that the preliminary determination reached in the Proposed Decision and Order issued to the firm would not be influenced by specific evidence regarding the clarity of the DOE regulations. Consequently, Valley's request for an evidentiary hearing was denied.

INTERLOCUTORY ORDER

*Husky Oil Company of Delaware, Denver, Colorado, DEZ-0112 crude oil*

On September 20, 1978, the United States District Court for the District of Wyoming remanded to the DOE for reconsideration a Decision and Order issued to the Husky Oil Company of Delaware (Husky) by the Federal Energy Administration on December 15, 1976. *Husky Oil Co. of Delaware*, 4 FEA Par. 83,244 (1976), *aff'd*, 5 FEA Par. 80,649 (1977). In that Decision, the FEA granted Husky a partial exception from the provisions of 10 CFR 211.67 (the Entitlements Program). In remanding the Husky exception request to the DOE, the District Court ordered the DOE to recalculate the level of relief which had been approved in the December 15 order and to disregard any negative historical profit margin, crude oil production activities or profits, or base years unrepresentative of Husky's historical financial and operating position. After reviewing the record developed in the prior Husky exception proceedings and the directive of the District Court, the DOE concluded that its reconsideration could not be premised on the use of the standards established in *Delta Refining Co.*, 2 FEA Par.

83,275 (1975). Consequently, the DOE determined on a preliminary basis that the standard which should be adopted in its reconsideration of the Husky exception request is one which will prevent the entitlement purchase obligations which Husky would otherwise have incurred from placing the firm's refining and marketing operations into a loss position. Finally, in view of the fact that the utilization of a new standard in this case would necessitate a *de novo* review of Husky's historical financial and operating position, the DOE stated its intention to request certain financial and operating data which will enable the DOE to fully reconsider the Husky Application for Exception.

SUPPLEMENTAL ORDER

*Pawnee Petroleum Company, Seminole, Oklahoma, DRX-0117, crude oil*

A Remedial Order which was issued to Pawnee Petroleum Company on August 9, 1978 implied that Pawnee could file an Appeal of that Order with the Federal Energy Regulatory Commission. In order to clarify Pawnee's appellate rights, the DOE amended the Order to state that the Remedial Order was a final order of the DOE from which any aggrieved party may seek judicial review.

DISMISSALS

The following submission was dismissed following a statement by the applicant indicating that the relief requested was no longer needed:

*Equipment, Inc., Lafayette, Louisiana, DRH-0121*

The following submissions were dismissed on the grounds that the requests are now moot:

*Sun Company, Inc., Philadelphia, Pennsylvania, DES-0392*
*Sun Company, Inc., Philadelphia, Pennsylvania, DEA-0070*

The following submission was dismissed after the applicant repeatedly failed to respond to requests for additional information:

*Halter Gas Company, Oran, Missouri, DEE-1112*

The following submissions were dismissed on the grounds that alternative regulatory procedures existed under which relief might be obtained:

*Standard Oil Co. of California, San Francisco, California, DEE-1911 through DEE-1918, DXE-1919 through DXE-1935*
*Sun Company, Inc., Dallas, Texas, DXE-1945*

Copies of the full text of these Decisions and Orders are available in the Public Docket Room of the Office of Hearings and Appeals, Room B-120, 2000 M Street, N.W. Washington, D.C. 20461, Monday through Friday, between the hours of 1:00 p.m. and 5:00 p.m., e.s.t., except Federal holidays. They are also available in *Energy Management: Federal Energy Guidelines*, a commercially published loose leaf reporter system.

MELVIN GOLDSTEIN,
*Director, Office of Hearings and Appeals.*

JANUARY 12, 1979.

[FR Doc. 79-1764 Filed 1-17-79; 8:45 am]

---

[6450-01-M]

## ISSUANCE OF DECISIONS AND ORDERS

**Week of October 23 through October 27, 1978**

Notice is hereby given that during the week of October 23 through October 27, 1978, the Decisions and Orders summarized below were issued with respect to Appeals and Applications for Exception or other relief filed with the office of Hearings and Appeals of the Department of Energy. The following summary also contains a list of submissions which were dismissed by the office of Hearings and Appeals and the basis for the dismissal.

APPEALS

*Ernest E. Allerkamp, San Antonio, Texas, DRA-0042, crude oil*

Ernest E. Allerkamp filed an Appeal from a Remedial Order issued to him by FEA Region VI on September 9, 1977. In that Remedial Order, Region VI found that Allerkamp had improperly classified as stripper well properties the Halff & Oppenheimer property in Frio County, Texas, and the M. A. Tyler property in McMullen County, Texas. In his Appeal, Allerkamp maintained that the Halff & Oppenheimer property actually consisted of two properties, the Navarro Lease and the Austin Chalk Lease, and he claimed that the Navarro Lease qualified as a stripper well property on the basis of its 1972 production. In considering the Appeal, the DOE observed that Allerkamp had not contested the DOE's treatment of the Halff & Oppenheimer property as a single property prior to his Appeal. Nevertheless, the DOE exercised its discretion to consider this issue on Appeal in view of material submitted by Allerkamp which strongly indicated that the Halff & Oppenheimer property did in fact consist of two separate and distinct properties. In this regard, the DOE observed that the record developed by Region VI contained information which should have led that Office to determine whether one or two properties existed. The DOE also concluded that the data submitted by Allerkamp supported his contention that the Navarro Lease qualified as a stripper well property on the basis of 1972 production. In view of these findings, the DOE remanded the Remedial Order for further consideration.

*Arizona Fuels Corporation, Salt Lake City, Utah, FXA-1474, crude oil*

Arizona Fuels Corporation appealed from a Decision and Order which the FEA issued to it on July 12, 1977. *Arizona Fuels Corporation*, 6 FEA Par. 83,033 (1977). In that determination, the FEA granted Arizona Fuels an exception from the provisions of 10 CFR 211.67 (the Entitlements program) which extended the firm's prior exception relief through December 1977. The Arizona Fuels' Appeal, if granted, would provide additional entitlement exception relief for that period. In its Appeal, Arizona Fuels contended that the prior Decision was based on inaccurate financial data. In considering the Appeal, however, the DOE found that the FEA's determination relied on data which the firm itself had submitted. In addition, the DOE rejected the contention that the July 12 Decision should be revised to reflect an entitlement obligation based on the firm's corrected data because the DOE would review the financial projections at the end of the current fiscal year in any event. Accordingly, the Arizona Fuels Appeal was denied.

*Depco, Inc., Renville County, North Dakota, DRA-0068, crude oil*

Depco, Inc. filed an Appeal from a Remedial Order issued to the firm by DOE Region VIII on November 14, 1977. In the Remedial Order, DOE Region VIII found that Depco had erroneously classified 75 percent of the production from the Bryans No. 1 well as new crude oil by attributing that production to an adjoining property with a base production control level (BPCL) of zero. According to the Remedial Order, Depco attributed 75 percent of its production to the adjoining property because the Bryans lease occupied only 25 percent of a state-imposed Spacing Unit. In its Appeal, Depco asserted that the crude oil was properly attributed to the adjoining property in compliance with North Dakota state law. Depco also stated that if DOE regulations did not permit the firm to attribute production from one property to another, then the federal regulations would conflict impermissably with state law. In considering the Depco Appeal, the DOE first noted that its regulations did not permit a firm to ascribe the production from one property to another property since that policy would circumvent the intent of the price regulations. In addition, the DOE found that its price regulations did not conflict with the provisions of state law because, contrary to Depco's claim, the North Dakota Spacing Order which established the spacing units did not require production to be attributed from one property to another. Therefore, Depco's Appeal was denied.

*Dunaway, McCarthy & Dye, P.C., Washington, D.C., DFA-0223, Freedom of Information*

Dunaway, McCarthy & Dye, P.C. (DMD) appealed from a partial denial of a request for information which the firm had submitted under the Freedom of Information Act (FOIA). In its Appeal, DMD requested that the DOE direct the Information Access Officer to release documents which were withheld from the firm pursuant to the exemptions set forth in 5 U.S.C. 552(b). In considering the Appeal, the DOE determined that the three documents which had been withheld pursuant to Section 552(b)(4) should be released because the disclosure of the commercial information contained in those documents was unlikely to cause substantial competitive harm to the firms involved. With respect to those documents withheld pursuant to Section 552(b)(5), the DOE concluded that with the exception of certain segregable nonexempt portions which were releasable, these documents were properly withheld because they consisted of nonfactual predecisional intra-agency materials that were used in the department's deliberative process. In addition, the DOE found

that a "Regional Compliance Review" was properly withheld under Sections 552(b)(5) and (7A) because it contained investigative materials of a deliberative nature, the release of which would interfere with an ongoing enforcement proceeding. The DOE did, however, direct the release of a letter sent by the Federal Energy Administration to a committee of the House of Representatives, which had been withheld pursuant to Sections 552(b), 552(7A) and 552(7E). The DOE found that the release of this material would not interfere with any ongoing investigation and would not disclose investigatory techniques or procedures of the department. The DOE also directed the release of three documents which were arguably exempt, after finding that disclosure would not be contrary to the public interest.

*Enterprise Products Company, Houston, Texas, FRA-1200, propane*

Enterprise Products Company appealed from a Remedial Order for Immediate Compliance which was issued to the firm by FEA Region IV on February 16, 1977. The Remedial Order directed Enterprise to make available to Horne Products, Inc. that firm's base period use of propane at a pipeline terminal in Albany, Georgia. In its Appeal, Enterprise contended that it had acted in accordance with its normal business practices when it refused to supply Horne at the Albany terminal. In considering the Enterprise Appeal, the DOE found that during the base period, Enterprise had employed a prorationing policy to allocate transport rights on the pipeline during periods of excess demand. The DOE found, however, that FEA Region IV had failed to consider Enterprise's normal business practices in issuing the Remedial Order to the firm. Based on these findings, the DOE concluded that the Remedial Order should be remanded for further consideration.

*Hedrick and Lane, Washington, D.C., DFA-0209, Freedom of Information*

The law firm of Hedrick and Lane appealed from a denial of a request for information which the firm had submitted under the Freedom of Information Act (the FOIA). In its request, the firm sought the release of a document entitled "Joint Committee Policy and Progress in the H-Bomb Program: A Chronology of Leading Events, January 1, 1953" (the Chronology). The Information Access Officer had denied Hedrick and Lane's request on the ground that the Chronology was not an agency record, but was instead a Congressionally-generated document which remained the exclusive property of Congress, despite the fact that it was in the possession of the DOE and its predecessors. In considering the Appeal, the DOE noted that the FOIA did not define the term "agency records." The DOE referred, however, to a memorandum from the United States Attorney General which stated that the FOIA required the disclosure of "records in being and in the possession or control of an agency." According to the DOE, the Attorney General's position was consistent with the policy of full disclosure underlying the FOIA. The DOE determined that the Chronology was an "agency record" which would be subject to disclosure unless it fell within one of the nine categories of information listed in the FOIA. The DOE therefore remanded the proceeding for a determination as to its releasability and directed DOE officials to determine whether the information contained in the Chronology remained classified.

*Richard Levy, Alexandria, Virginia, DFA-0219, Freedom of Information*

Richard Levy appealed from a partial denial by the DOE Information Access Officer of a request for information which he had filed under the Freedom of Information Act (the Act). In his request, Levy had sought all documents in the custody of DOE Region VIII concerning his client, the Taylor Oil Company. The Information Access Officer released copies of several documents to Levy, but withheld 37 documents on the grounds that they satisfied one or more of the exemptions to the mandatory disclosure provisions of the Act. The Information Access Officer also withheld 28 documents on the ground that they were predecisional intra-agency memoranda, which are exempt from disclosure pursuant to Section 552(b)(5) of the Act. In addition, seven documents were withheld on the ground that they contained confidential financial information that was exempt from public disclosure under Section 552(b)(4) of the Act. Thirty-six documents were also withheld on the rationale that as part of an ongoing enforcement proceeding, they were exempt from mandatory disclosure under Section 552(b)(7)(A) of the Act. Finally, the Information Access Officer withheld one document on the ground that it was related solely to internal agency practices and was therefore exempt from disclosure, pursuant to section 552(b)(2) of the Act. Upon review of these documents, the DOE determined that five of the 28 documents which were withheld under Section 552(b)(5) did not contain predecisional analyses and recommendations, the release of which would injure the agency's deliberative processes. Therefore, the DOE concluded that those five documents did not properly fall within the exemption set forth in Section (b)(5) and directed their release. The DOE further determined that the seven documents withheld under Section 552(b)(4) contained confidential trade information that could harm the competitive position of Taylor. The DOE noted, however, that the Information Access Officer generally releases such information to counsel for the firm to which the information refers. Because the present denial apparently was made without knowledge of Levy's status as counsel for Taylor, the DOE ordered the release of the documents withheld under Section 552 (b)(4) that did not contain material protected from disclosure by Section 552(b)(5) of the Act. In addition, the DOE determined that the ten documents, or portions thereof, that were not exempt from disclosure under Sections 552(b)(4) and (b)(5) of the Act were also not exempt from disclosure under Section 552(b)(7)(A), because their release would not interfere with the ongoing enforcement proceedings against Taylor. Finally, the DOE determined that the single document withheld pursuant to Section 552(b)(2) was not exempt from disclosure because its release would not disclose any internal DOE investigative technique. Based on these determinations, the Levy Appeal was granted in part and denied in part.

*Louisiana Crude Oil and Gas Company, Inc., New Orleans, Louisiana, DRA-0109, crude oil*

Louisiana Crude Oil and Gas Company, Inc. filed an Appeal from a Remedial Order, which the Acting Regional Director of Enforcement of DOE Region VI issued to the firm on December 1, 1977. In that Remedial Order, Region VI determined that Louisiana Crude had improperly treated Tract 988 and 988A as a single property and had sold crude oil produced from these properties at unlawful price levels. On the basis of these findings, Louisiana Crude was directed to refund the overcharges which it had obtained. In considering the Appeal, the DOE found that Shell Oil Company subdivided the property into Tract 988 and 988A in 1968 and that two separate properties existed on January 1, 1972. With respect to Louisiana Crude's contention that the Remedial Order did not contain specific findings of fact to support the Regional Office's calculation of ceiling prices and cumulative deficiencies, the DOE determined that the Remedial Order did not provide sufficient information regarding the volume of new crude oil produced from Tract 988A. Therefore, the DOE granted the Appeal in part and remanded that portion of the Remedial Order to DOE Region VI for further elaboration of the calculations contained in the Remedial Order.

*McAfee, Taft, Mark, Bond, Rucks & Woodruff, Oklahoma City, Oklahoma, DFA-0222, Freedom of Information*

The law firm of McAfee, Taft, Mark, Bond, Rucks and Woodruff (McAfee) appealed from a denial of a Request for Information that the firm submitted under the Freedom of Information Act (the Act) on behalf of its client, Unit Operations, Inc. In its request McAfee sought copies of three interviews conducted by a DOE investigator with former employees of Unit Operations. The Information Access Officer withheld the documents on the grounds that they fell within the scope of the exemption for investigatory records specified in Section 552(b)(7)(a). In considering McAfee's Appeal, the DOE determined that the interviews contained information relating to an ongoing DOE investigation. The DOE concluded that disclosure of the nature of the government's enforcement proceeding against Unit Operations at the present time would make it more difficult to secure voluntary compliance from the firm, which is an integral part of the DOE enforcement program. Accordingly, McAfee's Appeal was denied.

*State of Hawaii; Chevron U.S.A., Inc., Union Oil Company of California, Honolulu, Hawaii, FXA-1488; FXA-1489; FXA-1473; motor gasoline and diesel fuel*

The State of Hawaii, Chevron U.S.A., Inc. and Union Oil Company of California filed Appeals from a Decision and Order that the FEA had issued to the State. State of Hawaii, 6 FEA Par. 83,046 (1977). In the previous Decision, the FEA granted a request for exception relief from the provisions of Section 212.83 that permitted certain refiners to increase prospectively their maximum permissible prices for motor gasoline and diesel fuel to reflect an increase in a license tax imposed by the State. The FEA denied a request for similar relief on a retroactive basis. In considering the three Appeals, which were consolidated for resolution in a single proceeding, the DOE first noted that the relief requested by the State had already been granted on a prospective basis in an earlier Decision. *State of Hawaii*, 3 FEA Par. 83,245 (1976). With respect to the pres-

ent request, which was limited to the period prior to the issuance of the 1976 Decision, the DOE found that the same circumstances which led to approval of prospective exception relief were present during the earlier period as well. The DOE therefore concluded that the State's request for additional relief would have been granted if it had applied on a timely basis. In addition, the DOE determined that there were compelling reasons that justified the approval of retroactive relief. In this regard, the DOE noted that the State's principal objectives in enacting the license tax were (i) to distribute the burdens of maintaining the State highway system equitably among highway users and (ii) to encourage conservation of the State's energy resources. The DOE found that these objectives would be frustrated if retroactive relief were not granted which permitted distributors to pass through the full amount of the increased license tax to their customers. Therefore, the three Appeals were granted.

PETITION FOR SPECIAL REDRESS

*Lerner Oil Company, Inc., Gardena, California, DSG-0024, motor gasoline*

Lerner Oil Company, Inc. filed a Petition for Special Redress with the DOE Office of Hearings and Appeals. In its Petition, Lerner requested that the DOE issue an order directing the Region IX Office to issue a Remedial Order on the basis of a complaint that Lerner filed against its base period supplier of motor gasoline. In considering the petition, the Office of Hearings and Appeals indicated that the decision whether to commence compliance proceedings against a particular firm is a matter of prosecutorial discretion. Accordingly, the Office of Hearings and Appeals held that it would not issue an order directing that a prosecution be initiated in the absence of a *prima facie* showing of a gross abuse of discretion on the part of the enforcement officials or a showing that the reasons provided for the Regions's actions are patently erroneous. The DOE found that Lerner had submitted no evidence to indicate that the failure of Region IX to issue a Remedial Order fell within either of these criteria. Therefore, the Lerner Petition for Special Redress was denied.

REQUESTS FOR EXCEPTION

*Aminoil U.S.A., Inc., Washington, D.C., DEE-1432 crude oil*

Aminoil U.S.A., Inc. filed an Application for Exception from the provisions of 10 CFR, Part 212, Subpart D, which, if granted, would permit the firm to sell the crude oil produced from the California State Lease 392, Lower Main Zone at upper tier ceiling prices. In considering the exception application, the DOE determined that the costs of producing crude oil from the Lower Main Zone had increased significantly since 1973 and that Aminoil's costs of production exceeded the prices that the firm was permitted to charge for the crude oil. Consequently, the DOE concluded that Aminoil did not have an economic incentive to continue to operate the Lower Main Zone. The DOE also found that the recoverable crude oil in the reservoir underlying the Lower Main Zone would not be produced in the absence of exception relief. On the basis of precedents involving similar factual situations, the DOE concluded that the application of the lower tier ceiling price resulted in a gross inequity to Aminoil. Based on operating data which the firm submitted for its most recently completed fiscal period, the DOE granted exception relief which permitted the firm to sell at upper tier ceiling prices 28.32 percent of the crude oil produced and sold for the benefit of the working interest owners from the Lower Main Zone.

*R. H. Engelke, San Antonio, Texas, DXE-1667 crude oil*

R. H. Engelke filed an Application for Exception from the provisions of 10 CFR, Part 212, Subpart D, which, if granted, would extend the exception relief previously granted to Engelke and permit him to continue to sell a portion of the crude oil produced from the Bertha Copsey lease located in Jackson County, Texas, at upper tier ceiling prices. In considering the exception application, the DOE found that Engelke had continued to experience increased operating expenses at the lease and that in the absence of exception relief, the working interest owners would lack an economic incentive to continue to produce crude oil from the property. On the basis of operating data which Engelke had provided for the most recently completed fiscal period, the DOE granted exception relief which permitted Engelke to sell 98.14 percent of the crude oil produced for the benefit of the working interest owners from the Bertha Copsey Lease at upper tier ceiling prices.

*Getty Oil Company, Los Angeles, California, DEE-1377, through DEE-1381, crude oil*

Getty Oil Company filed five Applications for Exception from the provisions of 10 CFR, Part 212, Subpart D, which, if granted, would permit Getty to sell the crude oil produced from five properties located on the Zaca Field near Santa Maria, California, at upper tier or market price levels. In considering the exception applications, the DOE determined that the operating costs for each of the properties had increased to the point where the firm no longer had an economic incentive to continue the production of crude oil from the properties. The DOE also found that if Getty abandoned its operations at the five properties, a substantial quantity of otherwise recoverable domestic crude oil would not be produced. In order to provide Getty with an economic incentive to operate the properties, exception relief was granted which permitted the firm to sell a portion of the crude oil produced for the benefit of the working interest owners from three of the leases at upper tier ceiling prices. In addition, the DOE granted exception relief which permitted Getty to sell a portion of the working interest share of production from the remaining two leases at market price levels.

*P & M Petroleum Management, Denver, Colorado, DXE-1606 crude oil*

P & M Petroleum Management filed an Application for Exception from the provisions of 10 CFR, Part 212, Subpart D, which, if granted, would result in the extension of exception relief previously approved and would permit P & M to continue to sell a portion of the crude oil produced from the Track Lease in the Tule Creek South field in Roosevelt County, Montana, at upper tier ceiling prices. In considering the exception request, the DOE found that P & M had continued to incur increased operating costs in connection with the Track Lease and that in the absence of continued exception relief, P & M would lack an economic incentive to produce crude oil from the property. On the basis of the financial data which P & M provided for the most recent six-month period, the DOE granted exception relief which permitted P & M to sell at upper tier ceiling prices 68.65 percent of the crude oil produced from the Track Lease for the benefit of the working interest owners.

*Standard Oil Company (Indiana), Chicago, Illinois, DEE-0252, natural gas liquids*

The Standard Oil Company (Indiana) (SOC) filed a Statement of Objections to a Proposed Decision and Order issued to SOC on February 13, 1978. In the Proposed Decision, the DOE tentatively determined that the firm should be granted an exception from the provisions of 10 CFR 212.165 which would permit it to increase its prices for natural gas liquids and liquid products to reflect non-product cost increases incurred at its Bairoil natural gas processing plant. The DOE also noted in the proposed determination that the Bairoil facility had been shut down for repairs for a portion of the third quarter of the firm's 1977 fiscal year, resulting in a lower level of production during that quarter than SOC otherwise would have obtained. Accordingly, the DOE utilized production volume data from the fourth quarter of 1977 in its calculations of increased costs. In objecting to this methodology, SOC contended that the DOE should have used both cost as well as production volume data for the fourth fiscal quarter of 1977 since its cost data for the third quarter was also unreasonably low, due to the shutdown. Although the record contained no written submission from SOC of its cost or production volume data for the fourth quarter of 1977, the DOE noted that the production volume data appeared in Table A of the Proposed Decision and Order. Moreover, SOC had submitted an affidavit which indicated that the firm's fourth quarter cost and production volume data was provided to the DOE in a telephone conversation prior to issuance of the Proposed Decision and Order. The DOE concluded that it should incorporate that data in its calculation of non-product costs. On the basis of that data, the DOE found that the level of exception relief granted in the Proposed Decision should be increased from $.0064 to $.0109 per gallon.

REMEDIAL ORDERS

*Bright & Schiff, Dallas, Texas, DRO-0099, crude oil*

Bright and Schiff filed a Statement of Objections to a Proposed Remedial Order which FEA Region VI issued to the firm on September 2, 1977. The Proposed Remedial Order found that Bright & Schiff had incorrectly classified its A. E. Webb lease in Yokum, Texas, as a stripper well property and improperly sold crude oil produced from that property at market price levels. In reaching this determination, FEA Region VI relied upon Ruling 1974-29 as a basis for its calculations of the lease's average daily production (ADP). In its Statement of Objections, Bright & Schiff contended that the FEA erroneously excluded injection wells from the calculation of the ADP of the Webb lease under the recent holding in *Energy Reserves Group, Inc. v. FEA*, 447 F. Supp. 1135 (D. Kan. 1978). In that case, a

Federal district court invalidated Ruling 1974-29, which specifies that injection wells are not to be counted in determining the ADP of a crude oil producing property. The DOE noted, however, that the department's Office of Enforcement had not acquiesced in the district court's opinion and was continuing to enforce Ruling 1974-29 against all firms except the plaintiffs in that lawsuit, pending a decision by the Temporary Emergency Court of Appeals on an appeal on the *Energy Reserves* case. Since the DOE in a prior decision had approved the Office of Enforcement's policy of continuing to enforce Ruling 1974-29, the DOE found no basis to suspend enforcement of the Ruling in the present proceeding. The DOE also rejected Bright & Schiff's claim that the FEA lacked the authority to assess interest on the overcharges specified in its Proposed Remedial Order. Bright & Schiff's Statement of Objections was therefore rejected, and the Proposed Remedial Order was issued as a final order of the DOE.

In the following cases involving Proposed Remedial Orders, no Statements of Objections were filed. The DOE therefore issued Remedial Orders in final form.

NAME, LOCATION AND CASE NO.

*Greene Oil Company, Letcher, South Dakota, DRW-0005*

*O'Kan Fluid Service, Inc., Liberal, Kansas, DRW-0009*

*Butler Fuel Company, Oxford, Massachusetts, DRW-0004*

*Jedco, Inc., Mobile, Alabama, DRW-0006*

*John T. Ackerman, Sisseton, South Dakota, DRW-0002*

*R. W. Jones & E. Haag, A Copartnership, Freer, Texas, DRW-0007*

MOTIONS FOR EVIDENTIARY HEARING

*Marine Petroleum Company, Washington, D.C.; Tresler Oil Company, Washington, D.C.; Independent Terminal Operators Association, Washington, D.C.; Northeast Petroleum Industries, Inc., Washington, D.C.; Mid-Valley Petroleum Company, Washington, D.C.; Gibbs Oil Company, Washington, D.C.; Supreme Petroleum Company of New Jersey, Washington, D.C., DRH-0019; DRH-0025; DRH-0024; DRH-0011, motor gasoline*

Seven intervenors filed Motions for Evidentiary Hearing in connection with an Appeal proceeding involving a Remedial Order issued to Champlin Petroleum Company. In considering the Motions, the DOE found that the issues raised by the intervenors could best be resolved through the submission of documentary evidence, rather than oral testimony at an evidentiary hearing. Although the Motions were accordingly denied, the DOE permitted the intervenors to file additional documentary submissions in support of their positions.

*Quincy Oil, Inc.; Quincy, Massachusetts, Taunton Municipal Lighting Plant, Taunton, Massachusetts, DEH-0028; DEH-0029, fuel oil*

Quincy Oil, Inc. and Taunton Municipal Lighting Plant filed Motions for Evidentiary Hearing in connection with the DOE's consideration of Statements of Objections which the two firms had filed to a Proposed Decision and Order issued to Quincy on March 17, 1978. In that Proposed Decision, the DOE tentatively determined that Quincy's Application for Exception from the provisions of 10 CFR 212.93 should be granted in part. The DOE had also issued a determination relating to portions of the Quincy and Taunton requests for an evidentiary hearing. *See Quincy Oil, Inc.*, 2 DOE Par. —— (August 31, 1978). The present proceeding related to the remaining issues in the parties' Motions for Evidentiary Hearing. The DOE first considered Quincy's request that it be permitted to present the testimony of DOE officials to demonstrate that FEA Ruling 1977-5 constituted an impermissible retroactive change in regulatory requirements. With respect to this issue, Quincy first sought to examine the deliberative processes of DOE officials that led to the issuance of FEA Ruling 1977-5. The DOE determined that this request should be denied under the standards announced in *Champlin Petroleum Co.*, 2 DOE Par. —— (October 13, 1978). The DOE observed that Quincy had failed to establish that the agency left no written record of its reasons for issuing the Ruling. Therefore, the DOE held that an examination of the thought processes of departmental officials was not justified. Nevertheless, the DOE granted Quincy's request to examine agency personnel for the purpose of showing that previous informal interpretations of the regulatory term "transaction" were inconsistent with the use of that term in the Ruling. The DOE observed that the Ruling itself acknowledged that the term "transaction" had been subject to varying interpretations. In addition, the DOE found that during the period relevant to Quincy's exception requests, the agency had issued no rulings, interpretations, or decisional law clarifying the term "transaction." Since the issue of whether the interpretation of "transaction" contained in the Ruling constituted a departure from the agency's past practices was a prinicipal issue in the pending exception proceeding, the DOE determined that Quincy should be permitted to explore that issue at an evidentiary hearing. The DOE also granted Taunton's request to present testimony on the question of whether Quincy would receive windfall benefits at Taunton's expense if exception relief were approved.

REQUEST FOR DISCOVERY

*Leonard E. Belcher, Inc., Springfield, Massachusetts, DRD-0197 No. 2, heating oil*

Leonard E. Belcher, Inc. filed a Motion for Discovery in connection with an Appeal which the firm has filed from a Revised Remedial Order. In that appellate proceeding, Belcher claimed that the overcharges set forth in that Remedial Order should be offset by voluntary price reductions allegedly implemented by the firm. In the present discovery request, the firm sought copies of certain remedial orders and consent orders issued by the DOE to other firms, as well as the administrative records underlying those determinations. Belcher also requested that if its Motion were denied, the DOE nevertheless grant a stay of the appellate proceeding pending a determination on a Request for Information which Belcher intended to file pursuant to the Freedom of Information Act. Belcher contended that the material it sought was necessary to clarify DOE enforcement policy with respect to voluntary refunds. In considering the firm's discovery request, the DOE noted that its policy governing offsets was set forth in a previous Decision issued to Belcher in connection with the present enforcement proceeding, *Leonard E. Belcher, Inc.*, 1 DOE Par. 80,183 (1978). The DOE also noted the Belcher could acquire the information through research conducted in the DOE Freedom of Information Reading Room. In its Motion, Belcher also renewed a request that the DOE subpoena certain personnel employed by five of Belcher's competitors. The DOE had previously considered and rejected this request in *Leonard E. Belcher, Inc.*, 2 DOE Par. 82,505 (1978), and again concluded that this information would not assist the DOE in determing whether Belcher's price reductions satisfy the *Mid-Continent* criteria. Accordingly, the DOE denied Belcher's discovery request. In evaluating the request for stay, the DOE found that the information sought by Belcher would not materially advance the appellate proceeding. The DOE also concluded that any further delay in the enforcement proceeding would adversely affect any customer who was actually overcharged and would frustrate the compelling public interest of securing timely compliance with the DOE price regulations. Accordingly, the DOE denied the Belcher stay request.

DISMISSALS

The following submission was dismissed following a statement by the applicant indicating that the relief requested was no longer needed:

*Mid-America Refining Company, Washington, D.C., DEE-1421*

The following submissions were dismissed on the grounds that recent regulatory changes have eliminated the need for the exception relief requested:

*Coastal States Gas Corporation, Houston, Texas, DXE-1893*

*Texas Pacific Oil Company, Inc., Dallas, Texas, DEE-1970*

Copies of the full text of these Decisions and Orders are available in the Public Docket Room of the Office of Hearings and Appeals, Room B-120, 2000 M Street, NW., Washington, D.C. 20461, Monday through Friday, between the hours of 1:00 p.m. and 5:00 p.m., e.s.t., except Federal holidays. They are also available in *Energy Management: Federal Energy Guidelines*, a commercially published loose leaf reporter system.

MELVIN GOLDSTEIN,
*Director, Office of Hearings and Appeals.*

JANUARY 12, 1979.

[FR Doc. 79-1765 Filed 1-17-79; 8:45 am]

---

[6450-01-M]

## ISSUANCE OF DECISIONS AND ORDERS

### Week of October 30 Through November 3, 1978

Notice is hereby given that during the week of October 30 through November 3, 1978, the Decisions and Orders summarized below were issued with respect to Appeals and Applications for Exception or other relief filed with the Office of Hearings and Appeals of the Department of Energy. The following summary also contains a list of submissions which were dis-

missed by the Office of Hearings and Appeals and the basis for the dismissal.

APPEALS

*Andrews, Kurth, Campbell & Jones, Washington, D.C., DFA-0228, Freedom of Information*

Andrews, Kurth, Campbell & Jones appealed from a partial denial by the Director of the Division of Freedom of Information and Privacy Act Activities (the Director) of a request for information which the firm had submitted under the Freedom of Information Act (FOIA). In its Appeal, Andrews requested that the DOE release the documents which had been withheld and order the Director to identify additional documents responsive to the firm's request. In considering the Appeal, the DOE determined that ten of the requested documents had been properly withheld by the Director under Section (b)(5) of the FOIA, which exempts from mandatory disclosure certain inter-agency and intra-agency memoranda. The DOE nevertheless directed the release of material in eight of those documents on the basis that disclosure would be in the public interest. With respect to the remaining documents withheld under other exemptions of the FOIA, the DOE determined that disclosure would not be in the public interest. Finally, the DOE released portions of two other documents since they did not fall within any exemption. The DOE also ordered the Director to identify with greater specificity certain documents responsive to Andrews' request.

*Exxon Company, U.S.A., Washington, D.C., DFA-0216, Freedom of Information*

Exxon Company, U.S.A. appealed from a partial denial by the Director of the Division of Freedom of Information and Privacy Act Activities (the Director) of a Request for Information which the firm submitted under the Freedom of Information Act, 5 U.S.C. 552 (FOIA). The Director had withheld a number of the requested documents under the provisions of Sections (b)(4), (b)(5), and (b)(7) (A) and (E) of the FOIA. In considering the Exxon Appeal, the DOE found that the Director had erred in allowing individual DOE offices to determine whether the request was for reasonably described documents. The matter was therefore remanded to the Director for a single determination as to whether the Exxon request reasonably described the records sought. The DOE also reviewed the documents which had been withheld by the Director and determined that a number of them should be disclosed.

*Gray Operating Company, Oklahoma City, Oklahoma, DRA-0009, crude oil*

Gray Operating Company appealed from a Remedial Order which the Acting Director of Enforcement of DOE Region VI issued to the firm on December 10, 1977. In the Remedial Order, Region VI found that Gray had sold crude oil produced from four properties at prices in excess of the maximum permissible prices. The Remedial Order therefore directed Gray to refund $31,170.23 in overcharges to its customers. In considering the Gray Appeal, the DOE determined that contrary to the firm's contention the DOE has the authority to issue remedial orders requiring restitution of revenues obtained in violation of the pricing regulations. The DOE also rejected Gray's claim that the Remedial Order had incorrectly applied the term "preceding calendar year." Finally, the DOE rejected Gray's claim that the overcharges should be offset by certain alleged undercharges to some of its customers. On the basis of the foregoing considerations, the DOE denied Gray's Appeal.

REQUESTS FOR EXCEPTION

*Age Investment Co., Inc., Lynnwood, Washington, DRC-0006, motor gasoline*

Age Investment Co., Inc. filed an Application for Exception from the provisions of 10 CFR 211.12 which, if granted, would result in the issuance of an order increasing Age's base period use of motor gasoline at a retail service station located in Lynnwood, Washington. In its Application, Age contended that the increased allocation was necessary to satisfy an increased demand for motor gasoline at the station since 1972. Age maintained that unless it received an increase in its base period use of motor gasoline, its financial position would be impaired and the firm would be unable to complete a capital expansion project at the station. After considering the firm's request, DOE Region X issued a Proposed Decision and Order in which it determined that the Age request should be denied. In considering the firm's Statement of Objections to the Proposed Decision, the DOE observed that, contrary to an argument advanced by Age, § 211.13(e) of the Mandatory Petroleum Allocation Regulations requires that a firm demonstrate that a serious hardship or gross inequity exists before it may be granted exception relief. The DOE determined that Age had failed to demonstrate that it was unable to obtain adequate supplies of motor gasoline. The DOE further found that the firm's claim of financial hardship was speculative and it had not shown that denial of its request would significantly frustrate one or more of the policy objectives of the Emergency Petroleum Allocation Act. Based on these findings, the DOE determined that Age had failed to demonstrate that it was experiencing a serious hardship or gross inequity and the firm's Application was therefore denied.

*Clarke County Supply, Inc., Berryville, Virginia, DEE-0452, coal, No. 2 heating oil*

Clarke County Supply, Inc. filed an Application for Exception from the requirement that it file Form EIA 2 ("Monthly Coal Report Retail Dealers—Upper Docks") and Form EIA 9 ("No. 2 Heating Oil Supply/Price Monitoring Report") with the DOE. In considering the exception request, the DOE found that Clarke should be able to compile the information required with minimal effort. The DOE also determined that Clarke had not demonstrated that any inconvenience that it might experience in filing the forms outweighed the benefits of compliance. Accordingly, the DOE denied Clarke's exception request.

*Forty-One Petitioners, natural gas liquids, natural gas liquid products*

Forty-one petitioners filed 239 Applications for Exception from the provisions of 10 CFR 212.165 requesting extensions of exception relief previously granted to them. However, the DOE recently amended § 212.165, providing that effective November 1, 1978 natural gas processors may pass through most increased non-product costs incurred in the production of natural gas liquids and natural gas liquid products. 43 FR 42984 (September 21, 1978). Those amendments have made it unlikely that continuing exception relief for the petitioners will be necessary after October 31, 1978. However, the DOE determined that exception relief should be approved for the month of October 1978. Accordingly, the DOE issued a Decision and Order which extended for the period October 1 through October 31, 1978 the exception relief that was previously granted to each of the petitioners.

*Green's Propane Gas Company, Smiths, Alabama, DEO-0005, propane*

Green's Propane Gas Company filed an Application for Exception from the provisions of 10 CFR 212.93 which, if granted, would permit it to charge prices for propane in excess of the maximum permissible prices. On February 10, 1978, DOE Region IV issued a Proposed Decision and Order to Green's which determined that relief should be granted prospectively from April 6, 1977 but denied prior to that date. A Consent Order was subsequently executed which resolved a compliance proceeding against Green's concerning the period from November 1, 1973 to March 31, 1974. Consequently, Green's withdrew its Statement of Objections to the proposed determination and the DOE issued the Proposed Decision and Order in final form.

*L & H Gas and Electric Co., Inc., Sharon Springs, Kansas, DRC-0007, propane*

L & H Gas and Electric Co., Inc. filed an Application for Exception from the provisions of 10 CFR 212.93 which, if granted, would permit L & H to retain revenues which it realized in sales of propane during the period October 1, 1973 through September 30, 1975. In its Application, L & H contended that retroactive exception relief was necessary because it would earn no profits if required to implement prospective price reductions. DOE Region VII issued a Proposed Decision and Order to L & H which determined that the exception request should be denied. In considering the firm's Statement of Objections, the DOE found that L & H's markup on sales of propane on May 15, 1973 was substantially lower that its historical markup. The DOE also found that if L & H had complied with the pricing regulations its pretax profits during the period in question would have been reduced significantly. The DOE concluded that if L & H were required to refund the alleged overcharges, the firm would probably have to cease its business operations. Accordingly, the Application for Exception was granted.

*Mid-Michigan Truck Service, Inc., Kalamazoo Michigan, DXE-1147, motor gasoline*

On May 10, 1978, the DOE issued a Supplemental Order to Mid-Michigan Truck Service, Inc. in which it approved an extension of exception relief previously granted to the firm. *Mid-Michigan Truck Service, Inc.*, 1 DOE par. 81,127 (1978). In that Order, the DOE directed Gulf Oil Corporation to supply Mid-Michigan with its base period use of petroleum products directly rather than through a substitute supplier. Based upon data submitted by Mid-Michigan in its present request and upon the recommendation of the Regional Administra-

tor of DOE Region V, the DOE determined that Mid-Michigan would experience a serious hardship in te absence of continued exception relief. Accordingly, an extension of exception relief was approved through December 31, 1978.

*North Pole Refining (a subsidiary of Earth Resources Company), Washington, D.C. FEE-4451, crude oil*

North Pole Refining filed an Application for Exception in which it requested that the DOE treat it and Delta Refining Company as separate entities for purposes of the Crude Oil Buy/Sell program (§ 211.65) and the Old Oil Entitlements Program (§ 211.67). In considering the request, the DOE noted that North Pole and Delta are both owned and controlled by Earth Resources Company and are therefore a single firm under the Mandatory Petroleum Price and Allocation Regulations. The DOE found that there was no basis to conclude that treating the entities as a single firm would prevent them from recovering their increased costs under the DOE Regulations. The DOE also noted that North Pole had not alleged that it was currently incurring a serious hardship as a result of the provisions of the Crude Oil Buy/Sell Program, but had only speculated that it might incure a hardship at some time in the future. The DOE also concluded that the applicant was not experiencing a serious hardship or gross inequity as a result of being treated as the same firm as Delta for purposes of the Old Oil Entitlements Program. Accordingly, North Pole's Application for Exception was denied.

*Panhandle Eastern Pipe Line Company, Houston, Texas, DEE-0349, DEE-0350, DEE-0351, DEE-0352, natural gas liquids, natural gas liquid products*

The Anadarko Production Company, a subsidiary of the Panhandle Eastern Pipe Line Company (PEPLC) filed a Statement of Objections to a Proposed Decision and Order issued to PEPLC on February 28, 1978. In the Proposed Decision, the DOE determined that PEPLC should be granted an exception from the provisions of 10 CFR 212.165 to permit it to increase its prices for natural gas liquids and natural gas liquid products to reflect non-product cost increases at three of its natural gas processing facilities. In its Statement of Objections, Anadarko contended that the effective date of the Proposed Decision and Order should be December 1, 1977, the date on which its Applications for Exception were filed. Anadarko also contended that the Order should have been issued to it rather than to its parent firm. In rejecting these contentions, the DOE noted that Anadarko had apparently misconstrued the meaning of the term "prospective exception relief," which the DOE uses to indicate the time period following the issuance of a Proposed Decision and Order. The DOE found that since the firm had not demonstrated that it satisfied the criteria generally applied to requests for retroactive relief, it should not be granted relief prior to the date of the Proposed Decision and Order. The DOE also found that under the applicable definition of "firm" it could consider either Anadarko or PEPLC as the applicant for exception relief. Since Anadarko had not alleged that the issuance of a Decision to its parent would cause either of those corporate entities any difficulties; the DOE concluded that there was no reason to depart from its general practice of issuing Decisions involving the provisions of 10 CFR 212.165 to parent firms. Accordingly, the Statement of Objections was denied and the relief proposed in the February 28 Decision was made final.

*Petroleum, Inc. Wichita, Kansas, DEE-0317, crude oil*

Petroleum, Inc. filed an Application for Exception from the provisions of 10 CFR, Part 212, Subpart D, which if granted, would permit the firm to sell all of crude oil produced from the Crowder Lease located in Cleveland County, Oklahoma, at upper tier ceiling prices. In considering the exception request, the DOE found that the operating costs involved in producing crude oil from the property had increased to a level where those costs exceeded the revenues which the firm could obtain from the sale of the crude oil at the applicable ceiling price levels. The DOE concluded that under these circumstances Petroleum did not have an economic incentive to continue to produce crude oil from the Crowder Lease. Accordingly, on the basis of recent operating data submitted by the firm, Petroleum was granted exception relief which permitted the firm to sell at upper tier ceiling prices 100 percent of the crude oil produced from the Crowder Lease for the benefit of the working interest owners for a period of six months.

*Sabre Refining, Inc., Bakersfield, California, DXE-0346, crude oil*

Sabre Refining, Inc. filed an Application for Exception from its regulatory obligations under the Old Entitlements Program (10 CFR 211.67). The exception request, if granted, would relieve the firm of any obligation to purchase entitlements for the period November 1977 through April 1978. On January 16, 1978, the DOE issued a Proposed Decision and Order in which it reached the preliminary determination that the level of relief to be granted to Sabre pursuant to the criteria established in *Delta Refining Co.*, 2 FEA Par. 83,275 (1975), should be limited to the maximum entitlement purchase obligation which the firm would incur during the current period if its level of crude oil receipts and runs to stills were the same as in 1975 (the 1975 ceiling). On the basis of the application of the 1975 ceiling, the DOE proposed to deny Sabre's request for exception relief for the period November 1977 through April 1978. In its Statement of Objections to the Proposed Decision, Sabre contended that the DOE could not apply the 1975 ceiling to exception relief calculated under the *Delta* standards without first complying with statutory rulemaking provisions. Sabre also asserted that the DOE impermissibly applied the modifications to the *Delta* standards retroactively. In considering Sabre's first contention, the DOE found that the *Delta* standards had been adopted in the context of an adjudicatory proceeding and that the modification of those standards in subsequent proceedings represented the continuing development of that area of administrative law through case-by-case adjudication. Therefore, the DOE concluded that the rulemaking provisions of the Administrative Procedure Act did not apply to the present proceeding. With respect to Sabre's second argument, the DOE concluded that its proposed action was prospective in nature since it concerned a period of time that had not previously been considered and did not alter any relief previously granted to the firm. The DOE therefore concluded that the modified *Delta* standard was not being applied in a retroactive manner. Although the DOE concluded that it would be appropriate to apply the 1975 ceiling to the entire period for which Sabre requested exception relief, equitable considerations led it to approve additional relief for the months of November and December 1977. With respect to the period January through April 1978, the DOE utilized the 1975 ceiling and concluded that no exception relief was warranted.

*Southland Drilling Company, Inc., Houston, Texas, DEE-0113, crude oil*

Southland Drilling Company, Inc. filed an Application for Exception from the provisions of 10 CFR, Part 212 Subpart D, which, if granted, would permit Southland to charge upper tier ceiling prices for the crude oil which the firm produced from the ARCO Castillo "A" Lease during the months of February, March, and April 1977. Southland stated that early in 1977 it had attempted to certify the crude oil produced from the lease as new oil pursuant to the provisions of 10 CFR 212.131(a), but that the necessary certification forms were apparently lost in the mail. As a result, the lease's production was not certified in a timely manner and Southland was not able to charge upper tier ceiling prices for the crude oil until May 1977. In considering the exception request, the DOE found that Southland had failed to provide any evidence that it actually mailed the certification forms in a timely manner. In addition, the DOE noted that Southland had not submitted any financial material indicating that the firm would experience a severe and irreparable injury in the absence of retroactive exception relief. Southland's Application for Exception was therefore denied.

REQUESTS FOR MODIFICATION AND/OR RESCISSION

*Powerine Oil Company, Sante Fe Springs, California, DMR-0027, crude oil*

Powerine Oil Company filed an Application for Modification in which it requested that the DOE modify a Decision and Order which was issued to the firm on April 11, 1977. *Powerine Oil Co.*, 5 FEA Par 80.603 (1977). In that Decision, the FEA concluded that Special Rule No. 6 did not preclude it from considering Powerine's operating profits during October 1975 through January 1976 in calculating exception relief from its entitlements purchase obligations for the firm's 1975 fiscal year. In a subsequent Decision, the DOE determined that operating results for the months of October 1975 through March 1976 should be excluded in calculating exception relief to small refiners for 1975. *Southland Oil Co.*, 1 DOE Par. 82,503 (1977). In the present proceeding, Powerine requested that the relief previously granted to the firm be modified to reflect the adjustment which was implemented in the *Southland* case. In considering Powerine's request, the DOE noted that the present circumstances were virtually identical to those in the *Southland* case. The DOE therefore concluded that the entitlement exception relief granted to Powerine for its 1975 fiscal year should be modified. However, the DOE denied Powerine's request that exception relief be based solely on its profit margin. In this regard, the DOE observed that it had consistently applied both a

return on invested capital test and a profit margin test in granting exception relief to small refiners. Accordingly, the DOE amended the April 11, 1977 Decision and Orders and permitted Powerine to sell $1,271,648 in additional entitlements during November 1978.

*Tenneco Oil Company, Houston, Texas, FMR—0107 motor gasoline*

Tenneco Oil Company filed an application for Modification or Rescission of a Decision and Order which the FEA issued to it on March 31, 1977. *Tenneco Oil Co.*, 5 FEA Par. 80,590 (1977). In that determination, the FEA had upheld the previous denial of the firm's request for exception relief from the refiner price regulations with respect to sales of motor gasoline. According to Tenneco, the price regulations required it to establish a May 15 selling price for purchased gasoline that was less than the unit cost incurred on those purchases during May. Tenneco claimed that it was experiencing a gross inequity on gasoline sales due to the requirement that it include the negative May 15, margin in determining its maximum permissible selling prices. In considering the Tenneco request, the DOE found that the firm's margin on sales of gasoline on May 15, 1973 was less than its margin in 1971 and 1972. The DOE stated, however, that a decline in profitability per unit during the base period did not demonstrate the existence of a gross inequity, absent a showing of a significant adverse impact on the firm. In this regard, the DOE found that Tenneco's sales volumes of gasoline had increased during 1974 and 1975, offsetting the effect of the lower profit margin. In addition, the DOE found that Tenneco continued to realize significant profits on its revenues from gasoline sales. Based on these findings, the DOE affirmed its previous conclusion that Tenneco was not experiencing a gross inequity as a fesult of the pricing regulations. Accordingly, the Tenneco Application for Modification was denied.

REQUEST FOR STAY

*Continental Oil Company, Houston, Texas, DES—1947, motor gasoline*

Continental Oil Company filed an Application for Stay or the provisions of 10 CFR 211.10(b), in which it requested that the DOE permit it to apply a separate allocation fraction for its customers in Denver, Colorado and Billings, Montana. The stay was requested pending a determination on an Application for Exception which Continental has filed. In considering the Continental request, the DOE found that an explosion had rendered the firm's Denver refinery inoperative and that it was unable to transport sufficient amounts of gasoline into the Denver area to compensate for the loss of refining capacity. The DOE therefore concluded that Continental could not maintain a single allocation fraction for all of its customers. Accordingly, Continental's Application for Stay was granted.

REQUEST FOR TEMPORARY STAY

*Continental Oil Company, Houston, Texas, DST-1979, motor gasoline*

Continental Oil Company filed an Application for Temporary Stay of the provisions of 10 CFR 211.9, in which it requested that it be partially relieved of its obligation to supply gasoline to certain customers served by the firm's refineries in Denver, Colorado and Billings, Montana. In considering the request, the DOE found that due to an explosion which rendered Continental's Denver refinery inoperative it did not appear that the firm could supply all of the requirements of its Denver and Billings customers during November 1978. Accordingly, Continental's Application for Temporary Stay was granted.

MOTIONS FOR EVIDENTIARY HEARING

*Atlas Gas Company, Jacksonville, Florida, DRH-0020, propane*

Atlas Gas Company filed a Motion for Evidentiary Hearing in connection with a Statement of Objections to a Proposed Decision and Order which DOE Region IV issued to the firm on March 14, 1978. In considering the Atlas Motion, the DOE concluded that an evidentiary hearing should be convened in order to provide the firm with an opportunity to present evidence that Region IV calculated the overcharges in the Proposed Remedial Order on the basis of an incorrect formulation of the firm's classes of purchasers. The DOE denied the Atlas Motion with respect to its position that an audit completed on January 9, 1973 showed that Atlas was in compliance with the pricing regulations. The DOE found that Atlas would have a sufficient opportunity to support this contention through the submission of documentary evidence.

*Peterson Oil Company, Inc., Red Cloud, Nebraska, DRH-0033, refined products.*

Peterson Oil Company, Inc. filed a Motion for Evidentiary Hearing in connection with its Statement of Objections to a Proposed Remedial Order which DOE Region VII issued to the firm on April 7, 1978. In considering the Motion, the DOE determined that the facts which Peterson wished to establish at an evidentiary hearing concerning the operation of the wholesale portion of its business had been accepted as correct by the Office of Enforcement. Accordingly, the DOE concluded that there was no factual dispute between the parties and that an evidentiary hearing would therefore be unnecessary.

SUPPLEMENTARY ORDER

*Tonkawa Refining Company, Washington, D.C., DEX-0120, refined petroleum products*

On March 8, 1978, the DOE approved exception relief which permitted the Tonkawa Refining Company to be classified as a new refiner as of July 1, 1975, the date on which Tonkawa was released from Bankruptcy. *Tonkawa Refining Co.*, 1 DOE Par. 81,090 (1978). Subsequent to the issuance of that Decision, a dispute arose as to the proper calculation of the firm's increased product costs for the period July through December 1975. After reviewing the record in the matter, the DOE concluded that Tonkawa should be permitted to refer to the cost of crude oil purchased prior to July 1, 1975 in calculating its increased product costs. Accordingly, the March 8 Order was modified to permit Tonkawa to use the costs which it incurred in the month of June 1975 in establishing the cost of items offered for sale after July 1, 1975.

REMEDIAL ORDERS

In the following cases involving Proposed Remedial Orders, since no Statements of Objections were filed the DOE issued Remedial Orders in final form:

NAME, LOCATION, AND CASE NO.

*Southern Texas Oil and Gas Producing Company, Inc., Corpus Christi, Texas; DRW-0012*
*Thomas Petroleum, Liberal, Kansas, DRW-0013*
*Mecca Oil Company, Olney, Illinois, DRW-0008*
*Robert L. Adams, Corpus Christi, Texas, DRW-0003*
*Peterson Gas Company, Harlan, Iowa, DRW-0010*
*J. L. and W. L. Pulsipher, d/b/a Webster Village, Salt Lake City, Utah, DRW-0011*

DISMISSALS

The following submissions were dismissed following a statement by the applicant indicating that the relief requested was no longer needed:

*Dixie Gas Industries, Inc., Winter Park, Florida, DRA-0154; DRD-0154*
*Herlocker Fuel Company, Albemarle, North Carolina, DEE-1950*
*Robert E. Park, Casper, Wyoming, DRD-0046.*

Copies of the full text of these Decisions and Orders are available in the Public Docket Room of the Office of Hearings and Appeals, Room B-120, 2000 M Street, NW., Washington, D.C. 20461, Monday through Friday, between the hours of 1:00 p.m. and 5:00 p.m., e.s.t., except Federal holidays. They are also available in *Energy Management: Federal Energy Guidelines*, a commercially published loose leaf reporter system.

MELVIN GOLDSTEIN,

*Director, Office of Hearings and Appeals.*

JANUARY 12, 1979.

[FR Doc. 79-1766 Filed 1-17-79; 8:45 am]

---

[6450-01-M]

## ISSUANCE OF DECISIONS AND ORDERS BY THE OFFICE OF HEARINGS AND APPEALS

### Week of November 6 Through November 10, 1978

Notice is hereby given that during the week of November 6 through November 10, 1978, the Decisions and Orders summarized below were issued with respect to Appeals and Applications for Exception or other relief filed with the Office of Hearings and Appeals of the Department of Energy. The following summary also contains a list of submissions which were dismissed by the Office of Hearings and Appeals and the basis for the dismissal.

APPEALS

*Cleary, Gottlieb, Steen & Hamilton, Washington, D.C., DFA-0230, Freedom of Information*

The law firm of Cleary, Gottlieb, Steen & Hamilton appealed from a partial denial by the DOE Information Access Officer of a request for information which Cleary had filed under the Freedom of Information Act. In its request for information, Cleary had sought copies of 25 DOE memoranda contained in a document entitled "Clarifications". In response to Cleary's request, the Information Access Officer released six of the memoranda but withheld the remaining 19 under Exemption 5 of the Act, which generally protects from disclosure predecisional agency documents. In considering the Cleary Appeal, the DOE found that the withheld material formed part of the deliberative process of the agency regarding the implementation of various petroleum pricing regulations and therefore properly fell within the purview of Exemption 5. However, three of the memoranda contained segments of factual material which were segregable from the portions containing policy discussions and one memorandum contained material which was postdecisional in nature. The DOE determined that this material should have been released. Accordingly, the Cleary Appeal was granted in part.

*Estate of H. L. Hunt, Allen and Beauregard Parishes, Louisiana, DRA-0076, crude oil*

The Estate of H. L. Hunt appealed from a Remedial Order which had been issued to it by Department of Energy Region VI. In the Remedial Order, the DOE found that Hunt had improperly classified its Upper Bearhead Creek Unit as a stripper well property and as a result charged prices for the crude oil produced which were in excess of applicable ceiling price levels. The Remedial Order therefore directed Hunt to refund to the purchaser of the crude oil the excess revenues which Hunt had improperly obtained. In considering the Appeal, the DOE rejected Hunt's contention that the DOE lacked authority to require that interest be paid on the refund amount. The DOE found that the agency's statutory authority to impose interest charges had been established in a number of prior decisions and that the regulatory amendment authorizing interest payments merely clarified and made explicit the authority which the FEA already possessed under existing Regulations. The DOE also rejected Hunt's contention that it was improperly held liable for refunds of revenues received by other working and royalty interest owners. With respect to this argument, the DOE determined that the operator of a crude oil producing property may be held liable for all violations that may occur and that the Regional Office had not abused its discretion by issuing the Remedial Order to Hunt for the entire amount of overcharges. Hunt's final argument on Appeal was that FEA Ruling 1974-29 was invalid because it had not been promulgated in accordance with the procedural requirements of the Administrative Procedure Act and the Federal Energy Administration Act. In considering Hunt's contention, the DOE noted that Ruling 1974-29 had been upheld in a recent decision of the Temporary Emergency Court of Appeals and therefore had been properly applied to Hunt in determining that the Upper Bearhead Creek Unit did not qualify as a stripper well property during 1974. On the basis of the foregoing considerations, the DOE denied Hunt's Appeal.

REQUESTS FOR EXCEPTION

*Bock and Bacon Oil Company, Houston, Texas, DXE-1169, crude oil*

The Bock and Bacon Oil Company filed an Application for Exception from the provisions of 10 CFR, Part 212, Subpart D, which, if granted, would result in the extension of exception relief previously approved and would permit Bock and Bacon to continue to sell certain quantities of the crude oil produced from the Champion Paper Company Lease property at upper tier ceiling prices or at market price levels. In considering the exception request, the DOE found that the operating costs per barrel at the property continued to exceed the applicable lower tier ceiling price and that continued exception relief was therefore necessary to provide the firm with an adequate economic incentive to maintain production operations. In accordance with the precedent established in a number of previous Decisions, the DOE permitted Bock and Bacon to sell 59 percent of the crude oil produced from the property at market price levels and the remaining 41 percent of the crude oil at upper tier ceiling prices for a period of six months.

*Cheyenne Airways, Inc., Cheyenne, Wyoming, FEE-4657, aviation fuel*

Cheyenne Airways, Inc., filed an Application for Exception in which the firm requested that it be permitted to calculate its maximum allowable selling price for aviation fuel as if the firm qualified for fixed base operator status under the provisions of 10 CFR 212.93. If granted, Cheyenne's Application would permit the firm to increase its maximum allowable selling price for aviation fuel by three cents per gallon in order to reflect certain non-product cost increases which it has incurred since May 15, 1973. In considering Cheyenne's Application, the DOE found that Cheyenne offered the full services of a fixed base operator and therefore experienced the non-product cost increases which a fixed base operator typically experiences. However, the DOE noted that since Cheyenne does not technically qualify as a fixed base operator under a strict application of the regulatory definition set forth in 10 CFR 212.31, Cheyenne has been prevented from passing those increased non-product costs through to its customers. The DOE further found that as a result of this regulatory restriction on the passthrough of its non-product cost increases, Cheyenne was incurring substantial losses in the aviation fuels portion of its business. On the basis of the DOE's analysis of the history and purpose of the regulatory distinction between the two types of sellers of aviation fuels, the DOE concluded that the definition of a "fixed base operator" contained in the regulations was not intended to prevent firms such as Cheyenne from recovering a portion of their non-product cost increases which result from activities characteristic of a fixed base operator. Accordingly, Cheyenne's Application for Exception was granted.

*Knob Noster Oil Company, Inc., Knob Noster, Missouri, DEE-1290, propane*

The Knob Noster Oil Company, Inc., filed an Application for Exception from the provisions of 10 CFR 211.9, which, if granted, would result in the issuance of an Order assigning the Continental Oil Company to replace Knob Noster's base period supplier of propane. In considering Knob Noster's request, the DOE found that Knob Noster's base period supplier of propane charged prices which were substantially in excess of the prices which Knob Noster's competitors paid their suppliers. The DOE also found that Knob Noster was unable to purchase surplus propane at competitive price levels. As a result, the DOE determined that Knob Noster was experiencing a serious hardship which threatened the firm's continued existence as an independent marketer of propane. Consequently, the DOE concluded that exception relief was warranted. The DOE further concluded that since Knob Noster had experienced a consistent decline in operating income over the past six fiscal years, it would not be necessary for the DOE to review Knob Noster's exception relief on a quarterly basis. Therefore, Continental was assigned to supply Knob Noster with 67.25 percent of Knob Noster's base period use for a period of one year.

*Pacific Northern Oil Corporation, Seattle, Washington, FPI-0124, refined petroleum products*

Pacific Northern Oil Corporation (PANOCO) filed an Application for Exception from the provisions of 10 CFR 213.35(c). The exception request, if granted, would permit PANOCO to import into PAD Districts I-V on a license fee-exempt basis (i) 740,000 barrels of residual fuel oil, and (ii) 47,000 barrels of motor gasoline during the allocation period May 1, 1977, through April 30, 1978. On March 13, 1978, a Proposed Decision and Order was issued to PANOCO in which the DOE stated its intention to permit the firm to import 678,334 barrels of residual fuel oil into Districts II-V on a license fee-exempt basis during the 1977-78 allocation period and to permit the firm to utilize this level of exception relief until August 31, 1978. The DOE proposed to deny the PANOCO request in all other respects. On April 4, 1978, PANOCO filed a Statement of Objections to the Proposed Decision and Order. In its Statement of Objections, PANOCO contended that it should have been granted authority to import residual fuel oil on a fee-exempt basis into District I as well as District II-V. In considering the firm's contention, the DOE noted that under the provisions of Special Guideline I, 42 Fed. Reg. 54255 (1977), full exception relief had already been made available to PANOCO for the 1977-78 allocation period. Since PANOCO and all other importers of residual fuel oil into PAD I have already had full exception relief made available to them for the 1977-78 period, the DOE found that there was no reason to grant PANOCO any additional exception relief from the license fee requirements in that period. PANOCO also contended that it should have been permitted an extended period of time in which to utilize the exception relief specified in the Proposed Decision and Order so that the firm could have sufficient time to import the entire volume of residual fuel oil tentatively authorized by the DOE. In considering the firm's contention, the DOE noted that the Proposed Decision had been based to a large extent on PANOCO's projection that in the absence

of exception relief the firm would experience an operating loss during the 1977-78 allocation period. Nevertheless, the DOE found that the firm's actual financial results for that period, which were subsequently submitted, showed that PANOCO earned a substantial profit. In addition, the DOE determined that the shortage of domestic residual fuel oil on the West Coast which previously hampered PANOCO's operations no longer existed. In view of these changes in the factual situation which formed the basis for the March 13, 1978, Proposed Decision and Order, the DOE concluded that there was no longer any proper basis for an approval of exception relief for the 1977-78 allocation period. Accordingly, the PANOCO exception request was denied.

*Smith's Bottled Gas, Bruceton Mills, West Virginia, FEE-4846, propane*

Smith's Bottled Gas filed an Application for Exception from the provisions of 10 CFR, Part 211, which, if granted, would result in the issuance of an Order assigning Smith's a new base period supplier of propane and increasing the firm's base period use of propane from 85,193 to 154,800 gallons per year. On March 10, the DOE issued a Proposed Decision and Order in which it determined that Smith's was not incurring a serious financial hardship. On April 24, 1978, Smith's filed a Statement of Objection in which it contended that in calculating the firm's profitability, the DOE should not have excluded the owner-manager's salary and the firm's capital expenses. In considering these objections, the DOE noted that it generally excludes the owner-manager's salary when calculating a closely held firm's profitability. The DOE also found that even after taking into account increased depreciation and interest resulting from capital expenses, the firm still projected a pre-tax profit for 1978 which compared favorably to prior years. The DOE therefore concluded that Smith's had failed to demonstrate that it was suffering a severe financial hardship as a result of the application of the DOE regulatory program to its operations. Accordingly, Smith's request for exception relief was denied.

*United Independent Oil Company, Lusk, Wyoming, FEE-4393, crude oil*

United Independent Oil Company (UIOC) filed an Application for Exception from the provisions of 10 CFR 211.67(e)(2). The exception request, if granted, would result in the issuance of additional entitlements to the firm for crude oil which UIOC intended to have processed for its account by other refiners. In considering the UIOC exception request and Statements of Objection to the Proposed Decision and Order issued in this case, the DOE noted that the regulatory amendments to 10 CFR 211.67(e)(2) which eliminated the issuance of small refiner bias entitlements for crude oil processed for a small refiner's account, resulted in a significant alteration of the factual situation upon which UIOC apparently based its initial determination that its venture into the refinery business would be profitable. However, the DOE found that UIOC had failed to make any showing that the DOE had an affirmative duty to maintain the small refiner bias regulations in such a manner as to benefit UIOC. The DOE therefore concluded that the alteration in the factual situation which existed at the time UIOC decided to enter the refining business did not provide a basis upon which exception relief may be granted. Finally, the DOE determined that UIOC had failed to demonstrate that exception relief from the Entitlements Program was warranted under the precedents established in *Delta Refining Co.*, 2 FEA Par. 83,275 (1975), or *Wicket Refining Co.*, 2 FEA Par. 83,238 (1975). Accordingly, UIOC's Application for Exception was denied.

PETITION FOR SPECIAL REDRESS

*Schultz Gas Services, Inc., Lansing, Illinois, DSG-0035, DES-0110, propane*

Schultz Gas Service, Inc., filed a Petition for Special Redress which, if granted, would have resulted in the rescission of a Modified Special report order (MSRO) which DOE Region V issued to the firm on February 17, 1978. Schultz also requested a stay of the provisions of the MSRO pending a final determination on its Petition. In considering the Schultz petition, the DOE noted that the Office of Hearings and Appeals may only consider a petition for rescission of a Special Report Order if a preliminary review indicates that a reasonable probability exists that the petitioner will be able to satisfy the criteria specified in Section 210.91(d) of the DOE Regulations. Upon reviewing the contentions in Schultz's petition, the DOE concluded that Schultz had failed to show a reasonable probability that it could show circumstances so exceptional that an immediate review was warranted to correct substantial errors of law, to prevent substantial injury to legal rights, or to cure a gross abuse of administrative discretion. In this regard, the DOE noted that although the firm alleged that the MSRO requires it to develop information not readily available from its records, the DOE is empowered to require a firm to submit information in the format specified by the DOE regulations to demonstrate the firm's compliance with the applicable regulations. The DOE also rejected the firm's argument that compliance with the provisions of MSRO would be unduly burdensome. Finally, Schultz contended that the U.S. District Court's holding in *Crown Central Petroleum v. FEA*, Fed. Energy Guidelines Par. 26,101 (D. Md. 1978), rendered improper the MSRO's request for the basis and rationale of the firm's determination of its classes of purchaser. In considering Schultz's contentions, the DOE noted that it is not required as a matter of law to follow the holding of a U.S. District Court and that in the present case there were strong policy reasons for declining to apply the *Crown Central* holding. The DOE concluded that in order for it to determine whether the firm complied with the price regulations, Schultz must supply information concerning its class of purchaser determinations as required by the MSRO. On the basis of these findings, the Schultz Petition was dismissed and the firm's Application for Stay was denied.

DISMISSALS

The following submissions were dismissed following a statement by the applicant indicating that the relief requested was no longer needed:

*Atlas Gas Company, Jacksonville, Florida, DRO-0020, DRH-0020, DEO-0054*
*Dixie Gas Industries, Goldenrod, Florida, DEO-0120*
*Petroleum, Inc., Wichita, Kansas, DEE-1833*
*Carper S. Ryland, Winchester, Virginia, DEE-1311*
*Texaco, Inc., Tulsa, Oklahoma, DEE-1676*
*Texaco, Inc., Tulsa, Oklahoma, DEE-1468*
*Trends Publishing, Inc., Washington, D.C., DFA-0246*

The following submission was dismissed for failure to correct deficiencies in the firm's filing as required by the DOE Procedural Regulations:

*Bob Adams, Washington, D.C., DFA-0229*

The following submissions were dismissed on the grounds that alternative regulatory procedures existed under which relief might be obtained:

*Hugh M. Briggs, Dallas, Texas, DXE-1990*
*Ben R. Briggs, Dallas, Texas, DXE-1987*

Copies of the full text of these Decisions and Orders are available in the Public Docket Room of the Office of Hearings and Appeals, Room B-120, 2000 M Street, N.W., Washington, D.C. 20461, Monday through Friday, between the hours of 1:00 p.m. and 5:00 p.m., e.s.t., except Federal holidays. They are also available in *Energy Management: Federal Energy Guidelines*, a commercially published loose leaf reporter system.

MELVIN GOLDSTEIN,
*Director, Office of Hearings and Appeals.*

JANUARY 12, 1979.

[FR Doc. 79-1767 Filed 1-17-79; 8:45 am]

---

[6560-01-M]

## ENVIRONMENTAL PROTECTION AGENCY

[OPP-00084A; FRL 1034-7]

### FEDERAL INSECTICIDE, FUNGICIDE, AND RODENTICIDE ACT SCIENTIFIC ADVISORY PANEL

#### Meeting Agenda Change

The agenda for the two-day open meeting of the Federal Insecticide, Fungicide, and Rodenticide Act (FIFRA) Scientific Advisory Panel meeting to be held on January 25 and 26, 1979 has been changed. Notice of this meeting was published in the FEDERAL REGISTER on January 5, 1979 (44 FR 1454).

The primary agenda topics will be:

1. Completion of Panel review of proposed regulatory action to conclude the Rebuttable Presumption Against Registration (RPAR) process on amitraz (BAAM); and
2. Completion of Panel review of proposed regulatory action to conclude the RPAR process on pronamide.

The following alternative agenda topics will be discussed if time permits:

1. Final review of FIFRA Section 3(c)(7) interim-final regulations for

conditional registration of pesticides; and

2. Review of draft final regulations implementing Section 5(f) of the amended FIFRA for State Experimental Use Permits.

Special Note: Subpart H—Label Development, and Subpart I—Experimental Use Permits—of the Guidelines for registration of Pesticides in the United States will be scheduled for a subcommittee meeting in February; a separate FEDERAL REGISTER Notice giving details will be published.

For further information contact Dr. H. Wade Fowler, Jr., Executive Secretary, FIFRA Scientific Advisory Panel, Office of Pesticide Programs (TS-766), Room 803, Crystal Mall, Building No. 2, 1921 Jefferson Davis Highway, Arlington, Virginia, telephone 703/557-7560.

Dated: January 12, 1979.

EDWIN L. JOHNSON,
*Deputy Assistant Administrator for Pesticide Programs.*

[FR Doc. 79-1717 Filed 1-17-79; 8:45 am]

[6560-01-M]

[PF-119; FRL 1039-3]

PESTICIDE PROGRAMS

Filing of Pesticide and Feed Additive Petitions

Pursuant to sections 408(d)(1) and 409(b)(5) of the Federal Food, Drug, and Cosmetic Act, the Environmental Protection Agency (EPA) gives notice that the following petitions have been submitted to the Agency for consideration.

PP 9F2157. 3M Co., 3M Center, St. Paul, MN 55101. Proposes that 40 CFR 180 be amended by establishing a tolerance for the combined residues of the herbicide mefluidide (*N*-[2,4-dimethyl-5-[[(trifluoromethyl) sulfonyl]amino]phenyl] acetamide) in or on the raw agricultural commodity soybeans with a tolerance limitation of 0.01 part per million (ppm). The proposed analytical method for determining residues is by gas chromatography with flame photometric detection in a sulfur mode. PM25. (202/755-2196)

FAP 9H5203. Dow Chemical USA, Midland, MI 48640. Proposes that 21 CFR 561 be amended by establishing a regulation permitting residues of the insecticide chlorpyrifos [0,0-diethyl 0-(3,5,6-trichloro-2-pyridyl) phosphorothiate] and its metabolite 3,5,6-trichloro-2-pyridinol in or on sorghum grain milling fractions (bran, germ, screenings) intended for animal feed with a tolerance limitation of 1.5 ppm resulting from application of the insecticide to the growing of sorghum. PM12. (202/426-9425)

Interested persons are invited to submit written comments on these petitions to the Federal Register Section, Program Support Division (TS-757), Office of Pesticide Programs, EPA, Rm. 401, East Tower, 401 M St., SW, Washington DC 20460. Inquiries concerning these petitions may be directed to the designated Product Manager (PM), Registration Division (TS-767), Office of Pesticide Programs, at the above address, or by telephone at the numbers cited. Written comments should bear a notation indicating the petition number to which the comments pertain. Comments may be made at any time while a petition is pending before the Agency. All written comments filed pursuant to this notice will be available for public inspection in the office of the Federal Register Section from 8:30 a.m. to 4 p.m. Monday through Friday.

Dated: January 11, 1979.

DOUGLAS D. CAMPT,
*Acting Director, Registration Division.*

[FR Doc. 79-1715 Filed 1-17-79; 8:45 am]

[6560-01-M]

[PF-118; FRL 1039-2]

FILING OF PESTICIDE PETITION

Rohm & Haas Co., Independence Mall West, Philadephia, PA 19105, has submitted a petition (PP 9F2158) to the Environmental Protection Agency (EPA) which proposes that 40 CFR 180 be amended by establishing a tolerance for the residues of the herbicide sodium salt of acifluorfen (sodium 5 - [2 - chloro - 4 - (trifluoromethyl)-phenoxy]-2-nitrobenzoate) and its metabolites (the corresponding acid, methyl ester and amino analogs) in or on the raw agricultural commodities soybeans at 0.1 part per million (ppm); liver and kidney of cattle, goats, hogs, horses and sheep at 0.01 ppm; fat, meat and meat byproducts of poultry at 0.01 ppm; milk and eggs at 0.01 ppm. The proposed analytical method is by gas-liquid chromatographic separation and electron capture detection. Notice of this submission is given pursuant to section 408(d)(1) of the Federal Food, Drug, and Cosmetic Act.

Interested perosons are invited to submit written comments on this petition to the Federal Register Section, Program Support Division (TS-757), Office of Pesticide Programs, EPA, Rm. 401, East Tower, 401 M St., SW., Washington, DC 20460. Inquiries concerning this petition may be directed to Product Manager (PM) 23, Registration Division (TS-767), Office of Pesticide Programs, at the above address, or by telephone at 202/755-1397. Written comments should bear a notation indicating the petition number. Comments may be made at any time while a petition is pending before the Agency. All written comments filed pursuant to this notice will be available for public inspection in the office of the Federal Register Section from 8:30 a.m. to 4 p.m. Monday through Friday.

Dated: January 11, 1979.

DOUGLAS D. CAMPT,
*Acting Director, Registration Division.*

[FR Doc. 79-1714 Filed 1-17-79; 8:45 am]

[6560-01-M]

[PF-117; FRL 1039-1]

PESTICIDE PROGRAMS

Filing of Pesticide Petition

Monsanto Agricultural Products Co., 800 N. Lindbergh Blvd., St. Louis, MO 63166, has submitted a petition (PP 9F2156) to the Environmental Protection Agency (EPA) which proposes that 40 CFR 180.249 be amended by establishing a tolerance for residues of the herbicide alachlor [2-chloro-2',6'-diethyl-*N*-(methoxymethyl) acetanilide] and its metabolites (calculated as alachlor) in or on the raw agricultural commodity cabbage at 0.3 part per million (ppm). The proposed analytical method for determining residues is by gas liquid chromatography using a flame ionization detector. Notice of this submission is given pursuant to the provisions of section 408(d)(1) of the Federal Food, Drug, and Cosmetic Act.

Interested persons are invited to submit written comments on this petition to the Federal Register Section, Program Support Division (TS-757), Office of Pesticide Programs, EPA, Rm. 401, East Tower, 401 M St., SW, Washington DC 20460. Inquiries concerning this petition may be directed to Product Manager (PM) 25, Registration Division (TS-767), Office of Pesticide Programs, at the above address, or by telephone at 202/755-2196. Written comments should bear a notation indicating the petition number. Comments may be made at any time while a petition is pending before the Agency. All written comments filed pursuant to this notice will be available for public inspection in the office of the Federal Register Section from 8:30 a.m. to 4 p.m. Monday through Friday.

Dated: January 11, 1979.

DOUGLAS D. CAMPT,
*Acting Director, Registration Division.*

[FR Doc. 79-1713 Filed 1-17-79; 8:45 am]

[6560-01-M]

[OPP-31022; FRL 1038-8]

## PESTICIDE PROGRAMS

### Receipt of Application to Register Pesticide Product Entailing a Changed Use Pattern

Chevron Chemical Co., Ortho Div., 940 Hensley St., Richmond, CA 94804, has submitted to the Environmental Protection Agency (EPA), an application to amend registration of the product ORTHO TRIFORINE EC (EPA Reg. No. 239-2455), which contains 18.2% of the active ingredient triforine (*N,N*-[1,4-piperazinediylbis (2,2,2-trichloroethylidene)] bis [formamide]). The application received from Chevron Co. proposes that the use pattern of this pesticide be changed to include outdoor uses on roses and asters. The application also proposes that this product be classified for restricted use.

Notice of receipt of this application does not indicate a decision by the Agency on the application. Interested persons are invited to submit written comments on this application to the Federal Register Section, Program Support Division (TS-757), Office of Pesticide Programs, EPA, Rm. 401 East Tower, 401 M St., SW, Washington DC 20460. The Comments must be received on or before February 20, 1979, and should bear a notation indicating the EPA Registration Number "239-2455". Comments received within the specified time period will be considered before a final decision is made; comments received after the specified time period will be considered only to the extent possible without delaying processing of the application. Specific questions concerning this application and the data submitted should be directed to Product Manager (PM) 21, Registration Division (TS-767), Office of Pesticide Programs, at the above address or by telephone at 202/755-2562. The label furnished by Chevron Chemical Co., as well as all written comments filed pursuant to this notice, will be available for public inspection in the office of the Federal Register Section from 8:30 a.m. to 4:00 p.m. Monday through Friday.

Notice of approval or denial of this application to amend registration of ORTHO TRIFORINE EC will be announced in the FEDERAL REGISTER. Except for such material protected by Section 10 of the Federal Insecticide, Fungicide, and Rodenticide Act (FIFRA), as amended in 1972, 1975, and 1978 (92 Stat. 819; 7 U.S.C. 136,) the test data and other information submitted in support of registration as well as other scientific information deemed relevant to the registration decision may be made available after approval under the provisions of the Freedom of Information Act. The procedures for requesting such data will be given in the FEDERAL REGISTER if an application is approved.

Dated: January 11, 1979.

DOUGLAS D. CAMPT,
*Acting Director,*
*Registration Division.*

[FR Doc. 79-1712 Filed 1-17-79; 8:45 am]

---

[6560-01-M]

[FRL-1039-6]

## SCIENCE ADVISORY BOARD; EXECUTIVE COMMITTEE

### Meeting

As required by Pub. L. 92-463, notice is hereby given that a meeting of the Science Advisory Board's Executive Committee will be held beginning at 9:15 a.m., February 5 and 6, 1979 in the Administrator's Conference Room (Room 1101 West Tower), EPA Headquarters, 401 M Street, SW., Washington, D.C. The first day's Agenda includes a Report on Risk Assessment Methodologies, A Report on Research and Development Aspects of the President's Proposed Budget, A briefing by the Study Group on Regulatory Costs, A Discussion of the Agency's Five Year Research and Development Plan, and an update on EPA and the Universities. The second day's Agenda will be devoted to a Report by the Health Effects Research Review Group. The meeting is open to the public. Any member of the public wishing to attend, participate, or obtain information should contact Ms. Shirley Smith (202) 755-0263 by close of business January 31, 1979.

Dated: January 12, 1979.

RICHARD M. DOWD,
*Staff Director,*
*Science Advisory Board.*

[FR Doc. 79-1716 Filed 1-17-79; 8:45 am]

---

[6560-01-M]

[FRL 1040-8]

## SAFE DRINKING WATER ACT

### Review of Variances and Exemptions

This public notice is issued pursuant to sections 1415(a)(1)(F) and 1416(d) of the Safe Drinking Water Act as amended through November 1977, Pub. L. 95-190, (42 U.S.C. 300f *et seq.*), and 40 CFR 142:22 (July 1, 1977 ed.), National Interim Primary Drinking Water Regulations.

Under these regulations, the U.S. Environmental Protection Agency, Region V, is required to conduct a comprehensive review of all variances and exemptions granted during the period June 24, 1977 to June 23, 1978 by the Minnesota Department of Public Health, Michigan Department of Public Health, and the Wisconsin Department of Natural Resources.

Written documentation has been received by EPA Region V from each of the named States stating that there were no variances or exemptions granted during the period June 24, 1977 to June 23, 1978.

Consequently, notice is hereby given that in the absence of any State issued variances or exemptions during the statutory time period the section 1415(a)(1)(F) and 1416(d) review is not required and accordingly will not be conducted by the U.S. Environmental Protection Agency, Region V.

For further information, inquiries can be directed to Joseph F. Harrison, Chief, Water Supply Branch, U.S. Environmental Protection Agency, 230 S. Dearborn St. Chicago, Illinois 60604 (312) 353-2151.

Dated: January 10, 1979.

JOHN MCGUIRE,
*Regional Administrator,*
*Region V.*

[FR Doc. 79-1887 Filed 1-17-79; 8:45 am]

---

[6560-01-M]

[OPP-180259, FRL 1040-5]

## IDAHO, OREGON & WASHINGTON STATE

### Issuance of Specific Exemptions To Use Benomyl To Control Cercosporella Foot Rot of Wheat

The Environmental Protection Agency (EPA) has granted specific exemptions to the Idaho, Oregon, and Washington State Departments of Agriculture (hereafter referred to as "Idaho", "Oregon", and "Washington") to use benomyl on 50,000 acres in each State to control *Cercosporella* foot rot of wheat. These exemptions were granted in accordance with, and are subject to, the provisions of 40 CFR Part 166, which prescribes requirements for exemption of Federal and State agencies for use of pesticides under emergency conditions.

This notice contains a summary of certain information required by regulation to be included in the notice. For more detailed information, interested parties are referred to the applications on file with the Registration Division (TS-767), Office of Pesticide Programs, EPA, 401 M St., S.W., Room E-315, Washington, D.C. 20460.

According to the three States, *Cercosporella* foot rot, caused by the fungal pathogen *Cercosporella herpotrichoides*, is a serious disease of cereal grains and is most damaging to early fall-seeded wheat crops. The severity of the infection is dependent upon optimum climatic conditions, such as temperature and humidity. Because of heavy rains this year, conditions are

conducive for the development of *Cercosporella* foot rot inoculum.

There are no other pesticidal methods for controlling this disease and wheat strains resistant to this pathogen are not available. Specific exemptions for the use of benomyl to control this wheat disease have been issued annually since 1976 to Idaho, Oregon, and Washington. The three States estimated economic losses ranging from 1.3 to 6.8 million dollars in Idaho, 5 million dollars in Oregon and 1.425 million dollars in Washington if an effective pesticide is not used.

It should be noted that a rebuttable presumption against registration of pesticide products containing benomyl was published in the FEDERAL REGISTER on December 6, 1977 (42 FR 61788); however, no decision has yet been made by EPA as to appropriate regulatory action in this matter.

It was proposed to make a single application of Benlate 50W, containing the active ingredient benomyl, at a dosage rate of 1.0 pound of product (0.5 pound active ingredient (a.i.)) per acre either with aerial equipment (5-10 gallons of water) or with ground equipment (20-30 gallons of water).

After reviewing the applications and other available information, EPA has determined that (a) pest outbreaks of *Cercosporella* foot rot have occurred or are about to occur; (b) there is no pesticide presently registered and available for use to control *Cercosporella* foot rot in Idaho, Oregon, and Washington; (c) there are no alternative means of control, taking into account the efficacy and hazard; (d) significant economic problems may result if the foot rot is not controlled; and (e) the time available for action to mitigate the problems posed is insufficient for a pesticide to be registered for this use. Accordingly, Idaho, Oregon, and Washington State have been granted specific exemptions to use the pesticide noted above until June 30, 1979, to the extent and in the manner set forth in the applications. The specific exemptions are also subject to the following conditions:

1. The DuPont product Benlate 50W, EPA Reg. No. 352-354, containing the active ingredient benomyl, is authorized at a dosage rate of 0.1 pound of product (0.5 lb. a.i.) per acre in either 5 to 10 gallons of water (if applied aerially) or in 20 to 30 gallons of water (if applied by ground equipment). Only one applcation per acre is authorized;

2. Treatment areas are as follows: *Idaho:* Benewah, Clearwater, Idaho, Kootenai, Latah, Lewis, and Nez Perce counties. *Oregon:* Baker, Gilliam, Morrow, Sherman, Umatilla, Union, Wallowa, and Wasco counties and the Willamette Valley counties of Benton, Clackamas, Lane, Linn, Marion, Polk, Washington, and Yamhill. *Washington:* All counties east of the crest of the Cascade Mountains;

3. Applications may be made by either growers or State-licensed commercial applicators;

4. The presence of *Cercosporella* foot rot must be verified by qualified extension agents of Idaho University, Oregon University, or Washington State University in a given area before any treatment with benomyl is made;

5. Wheat grain with residues of benomyl not exceeding 0.2 part per million (ppm) and wheat straw with residues of benomyl not exceeding 15 ppm may enter interstate commerce. The Food and Drug Administration, U.S. Department of Health, Education, and Welfare, has been advised of this action;

6. All applicable label use directions, precautions, and restrictions must be adhered to;

7. The EPA shall be immediately informed of any adverse effects resulting from the use of benomyl in connection with these exemptions;

8. All applicators involved in the preparation of spray suspension must wear protective gloves and masks;

9. All clothing worn during the preparation of spray suspension must be removed and cleaned after each day of use;

10. All employees must wash immediately upon dermal contact with benomyl or the spray suspension; and

11. Idaho, Oregon, and Washington are each responsible for ensuring that all of the provisions of its specific exemption are met and each must submit a full report on the results of its specific exemption to EPA by January 31, 1980.

Statutory Authority: Section 18 of the Federal Insecticide, Fungicide, and Rodenticide Act (FIFRA), as amended in 1972, 1975, and 1978 (92 Stat. 819; 7 U.S.C. 136 *et seq.*).

Dated: January 12, 1979.

EDWIN L. JOHNSON
*Deputy Assistant Administrator For Pesticide Programs.*

[FR Doc. 79-1886 Filed 1-17-79; 8:45 am]

---

[6560-01-M]

[OPP-31023; FRL 1040-4]

## PESTICIDE PROGRAMS

### Receipt of Application to Register Pesticide Product Entailing a Changed Use Pattern

3M Co., 3M Center, St. Paul, MN 55101 has submitted to the Environmental Protection Agency (EPA) an application to register the product VISTAR 2-S (EPA File Symbol 7182-0), containing 28% of the active ingredient mefluidide (*N*-[2,4-dimethyl-5-[[trifluoromethyl)sulfonyl]amino]phenyl]acetamide). The application received from 3M Co. proposes that the use pattern of this pesticide be changed to include use on soybeans as a postemergence herbicide for rhizome and seedling johnsongrass and for volunteer corn control. The application also proposes that the product be classified for general use.

Notice of receipt of this application does not indicate a decision by the Agency on the application. Interested persons are invited to submit written comments on this application to the Federal Register Section, Program Support Division (TS-757), Office of Pesticide Programs, EPA, Rm. 401, East Tower, 401 M St. SW., Washington, D.C. 20460. The comments must be received on or before February 20, 1979 and should bear a notation indicating the EPA File Symbol "7182-0". Comments received within the specified time period will be considered before a final decision is made; comments received after the specified time period will be considered only to the extent possible without delaying processing of the application. Specific questions concerning this application and the data submitted should be directed to Product Manager (PM) 25, Registration Division (TS-767), Office of Pesticide Programs, at the above address or by telephone at 202/755-2196. The lable furnished by 3M Co., as well as all written comments filed pursuant to this notice, will be available for public inspection in the office of the Federal Register Section from 8:30 a.m. to 4:00 p.m. Monday through Friday.

Notice of approval or denial of this application to register VISTAR 2-S will be announced in the FEDERAL REGISTER. Except for such material protected by Section 10 of the Federal Insecticide, Fungicide, and Rodenticide Act (FIFRA) as amended in 1972, 1975, and 1978 (92 Stat. 819; 7 U.S.C. 136), the test data and other information submitted in support of registration as well as other scientific information deemed relevant to the registration decision may be available after approval under the provisions of the Freedom of Information Act. The procedures for requesting such data will be given in the FEDERAL REGISTER if an application is approved.

Dated: January 12, 1979.

DOUGLAS D. CAMPT,
*Acting Director, Registration Division.*

[FR Doc. 79-1885 Filed 1-17-79; 8:45 am]

[4560-01-M]

[OPP-30157; FRL 1040-3]

## PESTICIDE PROGRAMS

### Receipt of Applications to Register Pesticide Products Containing New Active Ingredient

Applications have been submitted to the Environmental Protection Agency (EPA) to register pesticide products containing active ingredients which have not been included in any previously registered pesticide products. Applications were made pursuant to the provisions of the Federal Insecticide, Fungicide, and Rodenticide Act (FIFRA) as amended in 1972, 1975, and 1978 (92 Stat. 819; 7 U.S.C. 136) and the regulations thereunder (40 CFR 162). Notice of receipt of these applications does not indicate a decision by the Agency on the applications.

Interested persons are invited to submit written comments on any applications referred to in this notice to the Federal Register Section, Program Support Division (TS-757), Office of Pesticide Programs, EPA, Room 401, East Tower, 401 M St., SW, Washington, DC 20460. The comments must be received on or before February 20, 1979 and should bear a notation indicating the EPA file symbol number of the application to which the comments pertain. Comments received within the specified time period will be considered before a final decision is made; comments received after the specified time period will be considered only to the extent possible without delaying processing of the application. Specific comments concerning these applications and the data submitted should be directed to the designated Product Manager (PM), Registration Division (TS-767), Office of Pesticide Programs, at the above address or appropriate telephone number cited. The labels furnished by each applicant, as well as all written comments filed pursuant to this notice, will be available for public inspection in the office of the Federal Register Section from 8:30 a.m. to 4:00 p.m. Monday through Friday.

Notice of approval or denial of the applications to register pesticide products will be announced in the FEDERAL REGISTER. Except for such material protected by Section 10 of FIFRA, the test data and other information submitted in support of registration as well as other scientific information deemed relevant to the registration decision may be made available after approval under the provisions of the Freedom of Information Act. The procedures for requesting such data will be given in the FEDERAL REGISTER if an application is approved.

Dated: January 12, 1979.

DOUGLAS D. CAMPT,
*Acting Director,*
*Registration Division.*

APPLICATIONS RECEIVED

EPA File Symbol 707-RUO. Rohm & Haas, Independence Mall West, Philadelphia, PA 19105. Blazer™ 2L. Active Ingredient: *Sodium salt of acifluorfen (sodium-[2-chloro - 4 - (trifluoromethyl) - phenoxy] - 2-nitrobenzoate)* 20.4%. Application proposes that this product be classified for general use for post-emergence application to soybeans to control susceptible weeds. PM23. (202/755-1397)

EPA File Symbol 707-RLN. Rohm & Haas. BLAZER™ 2S. Active Ingredient: 21.4% of same ingredient as above. Application proposes that this product be classified for general use for post-emergence application to soybeans to control susceptible weeds. PM23.

EPA File Symbol 100-ANN. Ciba-Geigy Corp., Agricultural Div., PO Box 11422, Greensboro, NC 27409. CGA-48988 5W. Active Ingredient: *N-(2,6-dimethylphenyl)-N-(methoxyacetyl) alanine methyl ester* 5%. Application proposes that this product be classified for general use for control of certain diseases of ornamentals and non-bearing citrus. PM21.

[FR Doc. 79-1884 Filed 1-17-79; 8:45 am]

---

[6712-01-M]

## FEDERAL COMMUNICATIONS COMMISSION

[FCC 79-10]

## TELEVISION BROADCAST SIGNALS

### Further FCC Policy Concerning Technical Standards

JANUARY 10, 1979.

The temporary policy expressed in this Public Notice concerning enforcement of television horizontal and vertical blanking standards supersedes the temporary policy that was pronounced in the FCC's Public Notice of June 16, 1978 (FCC 78-423).

BACKGROUND

On June 16, 1978, the FCC issued a Public Notice entitled "FCC Policy Concerning Technical Standards for Television Broadcast Signals." That Notice announced a temporary policy for enforcement of the television horizontal and vertical blanking standards and was stated as follows:

> The Commission finds it in the public interest to adopt a temporary policy and will, until July 1, 1979, issue Advisory Notices when horizontal blanking is detected in excess of 11.44 microseconds, up to 12 microseconds, and when vertical blanking of 22 or 23 lines is detected. Horizontal blanking in excess of 12 microseconds, and vertical blanking in excess of 23 lines, will be cause for issuance of a Notice of Violation. Irrespective of this announcement of our temporary policy, stations demonstrating a pattern of operation with horizontal blanking in excess of 11.44 microseconds, and vertical blanking in excess of 21 lines, will be subject to more severe sanctions.

It was also pointed out that the use of black or other colored borders, or reinserted video, solely to mask excessive horizontal or vertical blanking, is an unacceptable practice.

The Public Notice was issued in response to numerous inquiries which had been received from various sectors of the television industry as well as the FCC's own observations of blanking problems. We had arrived at the conclusion that rejection of program material for reasons of excessive vertial or horizontal blanking generates repercussions adverse to the public interest and that given time the problems being encountered could be remedied.

When the FCC announced its temporary enforcement policy in June, 1978, it did so with the understanding that the industry would cooperatively work together to correct the blanking problems. It was understood that the factors creating the problem touched upon many sectors of the industry such as broadcasters, independent producers of programs and commercials, and manufacturers. It is encouraging to learn that groups and individuals within the television industry are now studying the blanking problem in order to develop recommendations for long term solutions. For example, an Ad Hoc Committee of broadcasters was convened on August 8, 1978, to coordinate with many sectors of the industry for this purpose. Our Public Notice clearly has had the effect of heightening awareness of blanking problems and the following observations are pertinent:

1. Vertical and horizontal blanking difficulties are a much larger problem than the FCC and segments of the industry had realized.
2. Blanking problems are attributable to many activities in the industry: *e.g.*, the manufacture and adjustment of equipment either not meeting standards or which are borderline in meeting the standards; stretching and lengthening of blanking during program production, editing, and broadcast; production techniques not taking into account blanking requirements, etc.
3. There is still a lack of full understanding of the problems and the best long-term solutions to the problem.
4. There is a voluminous amount of program material now in archives, some of which will not comply with blanking standards if broadcast. An FCC policy concerning such material must be formulated.
5. The Commission's workload has increased as a result of an influx of requests for waiver of the blanking rules to permit both new as well as archives program material to be broadcast. In some instances, the program material

was derived from ENG equipment for newscasts, etc.

6. Information coming to the Commission staff indicates that there is uncertainty about the measurement procedures used in determining the horizontal blanking interval with program scenes having dark edges or having low illumination such as night scenes. Dark picture edges may be confused with excessive blanking.

ANNOUNCEMENT OF NEW TEMPORARY POLICY

In conclusion of the magnitude of the blanking problem and the cooperative effort underway among the various segments of the industry, effective upon release of this Notice and until July 1, 1979, the FCC will not issue Advisory Notices or Notices of Violation for vertical and horizontal blanking in excess of 21 lines and 11.44 microseconds, respectively. Under this policy, licensees must, in the exercise of their responsibility to broadcast in the public interest, take such measures as are necessary to insure that the technical quality of program material used comports with this responsibility.

In light of the temporary policy announced herein, our June, 1978, statement concerning use of black or other colored borders or reinserted video, is likewise being modified to place reliance upon each licensee's discretion and judgment.

We also propose to institute an Inquiry in the near future that addresses both the short-term and long-term aspects of this program. This will be a broad Inquiry investigating the many issues that have come to light concerning horizontal and vertical blanking such as the degree of picture degradation actually caused by existing program material having excessive horizontal and vertical blanking, the costs of bringing such material into compliance with our standards, and the tradeoffs between the costs and benefits of bringing existing program material into compliance, etc. It is also proposed to investigate the economic incentives facing program producers, distributors, and broadcasters to determine the role of the marketplace as a possible replacement for or complement to government regulations in insuring that unacceptable degradation of television programs having excessive horizontal and vertical blanking does not occur.

By July 1, 1979, it is expected that the Notice of Inquiry will have produced a record which will guide the FCC in identifying appropriate long-term action. Additionally, it will provide guidance in regard to appropriate action to be taken upon expiration of our temporary policy. It is also intended that such an inquiry will provide the vehicle or groups studying the blanking problems to submit their comments, observations and recommendations to the FCC.

It is to be emphasized that the policy announced herein goes solely to our decision to not issue Advisory Notices or Notices of Violation for excessive blanking for the period until July 1, 1979. It should not be interpreted, in any way, as prejudging an ultimate decison concerning the appropriateness of our current blanking standards. That decision will significantly depend upon results of the extensive effort underway within the industry to identify factors which may contribute to excessive blanking and develop proposed methods for dealing with these factors. Accordingly, we encourage continued industry effort to assist the FCC in developing a sound, long-range solution to the problem.

As a final matter, the many pending requests for waiver of our rules governing blanking are mooted by the action we are now taking. Therefore, these requests are dismissed.

For further information on this matter, please contact Wilson A. LaFollette or John W. Reiser (telephone 202-632-9660) or John M. Taff (telephone 202-632-5414).

Action by the Commission January 9, 1979. Commissioners Ferris (Chairman), Lee, Quello, Washburn, Fogarty, White and Brown.

FEDERAL COMMUNICATIONS COMMISSION,
WILLIAM J. TRICARICO,
*Secretary.*

[FR Doc. 79-1794 Filed 1-17-79; 8:45 am]

---

[6720-01-M]

## FEDERAL HOME LOAN BANK BOARD

### FEDERAL SAVINGS AND LOAN INSURANCE CORPORATION

#### Hearings on the Savings and Loan Holding Company Regulatory Program; Closing of Record

The Federal Home Loan Bank Board on January 10, 1979 held previously scheduled hearings on the savings and loan holding company regulatory program. At those hearings it was announced that the record of the proceedings would be held open for fourteen days—until the close of business January 24, 1979—so that all interested parties might submit in writing any further views and comments on the above referenced regulatory program.

All submissions, which will be deemed filed when received, should be directed to W. Michael Herrick, Attorney, Federal Home Loan Bank Board, Office of the General Counsel, 1700 G Street, N.W., Washington, D.C. 20552, (202-377-6417).

RONALD A. SNIDER,
*Assistant Secretary.*

[FR Doc. 79-1806 Filed 1-17-79; 8:45 am]

---

[6730-01-M]

## FEDERAL MARITIME COMMISSION

### INDEPENDENT OCEAN FREIGHT FORWARDER LICENSES

#### Correction to Notice of Revocation

By Decision served July 24, 1978, in Docket No. 77-53, *Licensing of Independent Ocean Freight Forwarders*, (FEDERAL REGISTER, Vol. 43, No. 146 p. 32776, July 28, 1978), the Federal Maritime Commission amended its General Order 4 (46 CFR 510) to require all licensed independent ocean freight forwarders to file with the Commission a surety bond in the amount of $30,000. The amendment stated that if a licensee fails to file such bond on or before December 1, 1978, the license shall be revoked in accordance with Rule 510.9 of General Order 4.

The Commission published a Notice of Revocation in the FEDERAL REGISTER, on January 3, 1979 (Vol. 44, No. 2, pp. 953-955) wherein notice was given of the independent ocean freight forwarders who had failed to file with the Commission a surety bond in the amount of $30,000 and whose licenses were revoked effective December 2, 1978. Erroneously, the following were among the licensees named:

Alf Halbig, 39 Broadway, Suite 2701, New York 10006; FMC 2027.
Mangill Shipping Corp., 39 Broadway, Suite 1017, New York 10006; FMC 1144.
H. E. Schurig & Co. of Louisana, 1810 International Trade Mart Tower, New Orleans, Louisanna 70130; FMC 988.

All requirements for bonds were met by December 1, 1978.

Hence, the above FMC Independent Ocean Freight Forwarder Licenses have not been revoked.

FRANCIS C. HURNEY,
*Secretary.*

[FR Doc. 79-1883 Filed 1-17-79; 8:45 am]

---

[6210-01-M]

## FEDERAL RESERVE SYSTEM

### BANK HOLDING COMPANIES

#### Proposed De Novo Nonbank Activities

The bank holding companies listed in this notice have applied, pursuant to section 4(c)(8) of the Bank Holding Company Act (12 U.S.C. 1843(c)(8)) and § 225.4(b)(1) of the Board's Regulation Y (12 CFR 225.4(b)(1)), for permission to engage *de novo* (or continue

to engage in an activity earlier commenced *de novo*), directly or indirectly, solely in the activities indicated, which have been determined by the Board of Governors to be closely related to banking.

With respect to each application, interested persons may express their views on the question whether consummation of the proposal can "reasonably be expected to produce benefits to the public, such as greater convenience, increased competition, or gains in efficiency, that outweigh possible adverse effects, such as undue concentration of resources, decreased or unfair competition, conflicts of interest, or unsound banking practices." Any comment on an application that requests a hearing must include a statement of the reasons a written presentation would not suffice in lieu of a hearing, identifying specifically any questions of fact that are in dispute, summarizing the evidence that would be presented at a hearing, and indicating how the party commenting would be aggrieved by approval of that proposal.

Each application may be inspected at the offices of the Board of Governors or at the Federal Reserve Bank indicated for that application. Comments and requests for hearings should identify clearly the specific application of which they relate, and should be submitted in writing and received by the appropriate Federal Reserve Bank not later than February 9, 1979.

A. *Federal Reserve Bank of New York*, 33 Liberty Street, New York, New York 10045:

1. CITICORP, New York, New York (insurance activities; Ohio): to act through its subsidiaries, Advance Insurance Agency, Inc., and Advance Life Insurance Agency, Inc., as agent or broker for the sale of property and casualty insurance for property securing extensions of credit or the provision of other financial services by Applicant's subsidiary, Advance Mortgage Corporation, generally with regard to one-to-four family residences, and to include liability coverage in home-owners "package" policies where such is the general practice. These activities would be conducted from an office located at 9247 North Meridian Street, Indianapolis, Indiana 46260, and the proposed services would be made available to customers served by offices of Advance Mortgage Corporation in Cleveland, Dayton, and Cincinnati, Ohio. The geographic areas to be served are the Cleveland, Dayton, and Cincinnati, Ohio metropolitan areas.

2. CITICORP, New York, New York (insurance activities; Maryland, Virginia, District of Columbia): to act through its subsidiaries, Advance Insurance Agency, Inc., and Advance Life Insurance Agency, Inc., as agent or broker for the sale of property and casualty insurance for property securing extensions of credit or the provision of other financial services by Applicant's subsidiary, Advance Mortgage Corporation, generally with regard to mobile homes and one-to-four family residences, and to include liability coverage in homeowners "package" policies where such is the general practice. These activities would be conducted from an office located at 9247 North Meridian Street, Indianapolis, Indiana 46260, and the proposed services would be made available to customers served by offices of Advance Mortgage Corporation in Towson, Baltimore, and Severna Park, Maryland. The geographic areas to be served are the Washington, D.C., and Baltimore, Maryland metropolitan areas (residential mortgage borrowers), and Northern Virginia, Washington, D.C., and Maryland (mobile home borrowers).

3. CITICORP, New York, New York (insurance activities; Illinois): to engage in the activities specified in the preceding paragraph 2 through the subsidiaries and from the office there identified. The proposed services would be made available to customers served by offices of Advance Mortgage Corporation in Springfield, Chicago, and Waukegan, Illinois. The geographic areas to be served are the Chicago and Waukegan metropolitan areas (residential mortgage borrowers), and the State of Illinois (mobile home borrowers).

4. CITICORP, New York, New York (insurance activities; Indiana): to engage in the activities specified in the preceding paragraph 2 through the subsidiaries and from the office there identified. The proposed services would be made available to customers served by offices of Advance Mortgage Corporation in Gary and Indianapolis, Indiana. The geographic areas to be served are the Gary, Indiana metropolitan area (residential mortgage borrowers) and the State of Indiana (mobile home borrowers).

B. *Federal Reserve Bank of Philadelphia*, 100 North 6th Street, Philadelphia, Pennsylvania 19105:

PHILADELPHIA NATIONAL CORPORATION, Philadelphia, Pennsylvania (factoring and commercial finance activities; Western United States): to engage through its subsidiaries, Congress Factors Corporation and Congress Financial Corporation, in the purchase of accounts receivable and the making of loans secured by accounts receivable, inventory, machinery, and equipment, and generally in the factoring and commercial finance business. These activities would be performed from an office of Applicant's subsidiaries at 3440 Wilshire Boulevard, Los Angeles, California 90010, and the geographic area to be served is the west coast of the United States, primarily California.

C. *Other Federal Reserve Banks:* None.

Board of Governors of the Federal Reserve System, January 11, 1979.

THEODORE E. ALLISON,
*Secretary of the Board.*

[FR Doc. 79-1879 Filed 1-17-79; 8:45 am]

---

[6210-01-M]

## ST. CLAIR BANCORP.

### Formation of Bank Holding Co.

St. Clair Bancorporation, East St. Louis, Illinois, has applied for the Board's approval under Section 3(a)(1) of the Bank Holding Company Act (12 U.S.C. 1842(a)(1)) to become a bank holding company by acquiring 93.3 percent of the voting shares of First National Bank at East St. Louis, East St. Louis, Illinois. The factors that are considered in acting on the application are set forth in Section 3(c) of the Act (12 U.S.C. 1842(c)).

The application may be inspected at the offices of the Board of Governors or at the Federal Reserve Bank of St. Louis. Any person wishing to comment on the application should submit views in writing to the Reserve Bank, to be received not later than January 31, 1979. Any comment on an application that requests a hearing must include a statement of why a written presentation would not suffice in lieu of a hearing, identifying specifically any questions of fact that are in dispute and summarizing the evidence that would be presented at a hearing.

Board of Governors of the Federal Reserve System, January 11, 1979.

THEODORE E. ALLISON,
*Secretary of the Board.*

[FR Doc. 79-1878 Filed 1-17-79; 8:45 am]

---

[6210-01-M]

## UNITED OKLAHOMA BANKSHARES, INC.

### Proposed Acquisition of United Securities, Inc.

United Oklahoma Bankshares, Inc., Oklahoma City, Oklahoma, has applied, pursuant to section 4(c)(8) of the Bank Holding Company Act (12 U.S.C. 1843(c)(8)) and § 225.4(b)(2) of the Board's Regulation Y (12 CFR 225.4(b)(2)), for permission to acquire voting shares of United Securities, Inc., Oklahoma City, Oklahoma. Notice of the application was published on December 21, 1978, in *The Daily Oklahoman*, a newspaper circulated in Oklahoma County, Oklahoma.

Applicant states that the proposed subsidiary would engage in the business of the purchase and sale for its own account and the account of others, of U.S. Treasury Securities, Securities of U.S. Government Agencies, and general obligations of States and political subdivisions thereof including the underwriting thereof. In its order of October 19, 1976 (41 FR 47083 (1976)) deferring consideration of an application to form United Bancorp Municipals, Inc. (62 *Federal Reserve Bulletin* 917 (1876)), the Board concluded as a general matter that the activity of underwriting and dealing in certain government and municipal securities was closely related to banking. That conclusion was affirmed in the Board's Order of January 26, 1978 (43 FR 5382 (1978)) announcing its decision to terminate suspension of consideration of the activity; not to adopt the proposed amendment; and to permit the activity, if at all, by order. On two previous occasions, by order, the Board has approved individual applications by bank holding companies to engage in this activity. (Stepp, Inc., (64 *Federal Reserve Bulletin* 223 (1978)). United Bancorp, (64 *Federal Reserve Bulletin* 222 (1978)).)

Applicant also states that the proposed subsidiary would provide portfolio investment advice to individuals, associations, corporations, financial institutions, and commercial banks. Such activities have been specified by the Board in § 225.4(a) of Regulation Y as permissible for bank holding companies, subject to Board approval of individual proposals in accordance with the procedures of § 225.4(b).

Interested persons may express their views on the question whether consummation of the proposal to engage in the listed activities can "reasonably be expected to produce benefits to the public, such as greater convenience, increased competition, or gains in efficiency, that outweigh possible adverse effects, such as undue concentration of resources, decreased or unfair competition, conflicts of interests, or unsound banking practices." Any request for a hearing on this question should be accompanied by a statement summarizing the evidence the person requesting the hearing proposes to submit or to elicit at the hearing and a statement of the reasons why this matter should not be resolved without a hearing.

The application may be inspected at the offices of the Board of Governors or at the Federal Reserve Bank of Kansas City.

Any views or requests for hearing should be submitted in writing and received by the Secretary, Board of Governors of the Federal Reserve System, Washington, D.C. 20551, not later than February 12, 1979.

Board of Governors of the Federal Reserve System, January 11, 1979.

THEODORE E. ALLISON,
*Secretary of the Board.*

[FR Doc. 79-1880 Filed 1-17-79; 8:45 am]

---

[6750-01-M]

## FEDERAL TRADE COMMISSION

### CIGARETTES AND RELATED MATTERS

**Methods to be Employed in Determining Carbon Monoxide, "Tar" and Nicotine Content; Notice of Opportunity to Submit Public Comments**

AGENCY: Federal Trade Commission.

ACTION: Proposed methods for determination of carbon monoxide, "tar" and nicotine content of cigarette smoke.

SUMMARY: Since 1967, the Commission has been determining and annually reporting the "tar" and nicotine content of cigarettes. The Commission has been using the Federal Trade Commission Method for Determination of Particulate Matter ("Tar") and Alkaloids (reported as Nicotine) in Cigarette Smoke as referred to in the Federal Trade Commission Notice of August 1, 1967, 32 FR 11178, and described in an article entitled, "Tar and Nicotine in Cigarette Smoke," by H. C. Pillsbury et al., which appeared in the Journal of Association of Official Analytical Chemists, Vol. 52, No. 3, 1969.

In addition to continuing its program of testing and reporting the "tar" and nicotine content of cigarettes, the Commission is now planning to initiate a program for the determination and publication of the carbon monoxide content of cigarette smoke. The Commission is also considering whether to initiate technical improvements in the presently used method for determining nicotine content. This new method is expected to reduce the time needed for checking results.

The purpose of this proceeding is to establish a public record to assist the Commission in resolving specific questions which relate to the manner of determining and reporting the carbon monoxide, "tar" and nicotine content of cigarette smoke.

To establish this public record, the Commission hereby invites all interested parties to submit written comments, including their views, data, arguments and suggestions, on the following questions:

1. Whether to use, in performing the above-described analysis, the new smoking machine as described by H. C. Pillsbury and G. Merfeld at the 32nd. Tobacco Chemists' Research Conference, October 1978, for the determination of "Tar," Nicotine and Carbon Monoxide. This determination involves the use of infra-red spectrophotometry. A written description of this machine, entitled "A 20-Part Sequential Smoking Machine for the Determination of Carbon Monoxide in Cigarette Smoke," is available upon request by writing Harold C. Pillsbury, Director, Tobacco Research Laboratory, Federal Trade Commission, Sixth and Pennsylvania Avenue, NW., Washington, D.C. 20580, or by calling him collect at (202) 523-3559.

2. Whether the carbon monoxide determined with the new smoking machine should be reported as milligram per cigarette.

3. Whether to modify the presently used method of "tar" and nicotine determination by using the method described in an article entitled, "Gas Chromatographic Determination of Nicotine Contained on Cambridge Filter Pads," by John R. Wagner et al., as presented at the annual meeting of The Association of Official Analytical Chemist, October, 1978; also available from Mr. Pillsbury at above address and telephone number.

Written comments pertinent to these questions or other aspects of the subject should be submitted in quintuplicate to Mr. Carol M. Thomas, Secretary, Federal Trade Commission, Sixth Street and Pennsylvania Avenue, NW., Washington, D.C. 20580, and postmarked on or before February 20, 1979.

The data, views arguments and suggestions presented in writing will be available for examination by interested parties at the Federal Trade Commission, Washington, D.C.

FOR FURTHER INFORMATION CONTACT:

William I. Rothbard, Attorney, Rm. 6716, (202) 724-1475, or Jane Dolkart, Attorney, Rm. 6109, (202) 724-1458, Star Building, Federal Trade Commission, Washington, D.C. 20580.

Issued: January 12, 1979.

CAROL M. THOMAS,
*Secretary.*

[FR Doc. 79-1817 Filed 1-17-79; 8:45 am]

---

[1610-01-M]

## GENERAL ACCOUNTING OFFICE

### REGULATORY REPORTS REVIEW

**Receipt of Report Proposal**

The following request for clearance of a report intended for use in collecting information from the public was received by the Regulatory Reports Review Staff, GAO, on January 12, 1979. See 44 U.S.C. 3512(c) and (d). The purpose of publishing this notice

in the FEDERAL REGISTER is to inform the public of such receipt.

The notice includes the title of the request received; the name of the agency sponsoring the proposed collection of information; the agency form number, if applicable; and the frequency with which the information is proposed to be collected.

Written comments on the proposed NRC request are invited from all interested persons, organizations, public interest groups, and affected businesses. Because of the limited amount of time GAO has to review the proposed request, comments (in triplicate) must be received on or before February 5, 1979, and should be addressed to Mr. John M. Lovelady, Assistant Director, Regulatory Reports Review, United States General Accounting Office, Room 5106, 441 G Street, NW, Washington, DC 20548.

Further information may be obtained from Patsy J. Stuart of the Regulatory Reports Review Staff, 202-275-3532.

NUCLEAR REGULATORY COMMISSION

The NRC requests clearance of new application requirements contained in 10 CFR Part 9, "Public Records" (new sections 9.14a(c) and 9.14b(d)). These amendments add a new section "Waiver or Reduction of Fees" and reflect the requirements of the Freedom of Information Act that documents shall be furnished without charge or at a reduced charge where an agency determines that waiver or reduction of the fee for searching and reproduction of records is in the public interest because furnishing the information can be considered as primarily benefiting the general public. New section 9.14b(d), approved by the Commission on a trial basis, provides that, in those cases where a waiver of fees was requested and denied and the requester agreed to bear the estimated cost, the requester may, within 30 days of receipt of the requested documents, resubmit a request for a waiver or reduction of fees if the receipt of the documents has materially changed the information originally furnished by the requester. The Commission believes that these amendments implement procedures for processing Freedom of Information Act requests which provide a reasonable balance between the rights of the requester, the resources available to the NRC, and the rights of the general public. The NRC estimates that potential respondents will number approximately 93 and that burden per licensee will average 4 hours annually.

NORMAN F. HEYL,
*Regulatory Reports,*
*Review Officer.*

[FR Doc. 79-1793 Filed 1-17-79; 8:45 am]

[4110-88-M]

## DEPARTMENT OF HEALTH, EDUCATION, AND WELFARE

### Alcohol, Drug Abuse, and Mental Health Administration

### ADVISORY COMMITTEES

#### Meetings

In accordance with Section 10(a)(2) of the Federal Advisory Committee Act (5 U.S.C. Appendix I), announcement is made of the following National advisory bodies scheduled to assemble during the month of February 1979:

CLINICAL PROGRAM-PROJECTS RESEARCH REVIEW COMMITTEE

February 15-16; 9:00 a.m.
Room C130, Shoreham Americana Hotel, 2500 Calvert Street, N.W., Washington, D.C. 20008.
Open—February 15; 9:00-10:00 a.m.
Closed—Otherwise.
Contact: Ms. Eileen Nugent, Room 10C-25, Parklawn Building, 5600 Fishers Lane, Rockville, Maryland 20857, 301-443-3367.

Purpose: The Committee is charged with the initial review of grant applications for Federal assistance in the program areas administered by the National Institute of Mental Health relating to clinical research and makes recommendations to the National Advisory Mental Health Council for final review.

Agenda: From 9:00-10:00 a.m., February 15, the meeting will be open for discussion of administrative announcements and program developments. Otherwise, the Committee will be performing initial review of grant applications for Federal assistance and will not be open to the public in accordance with the determination by the Administrator, Alcohol, Drug Abuse, and Mental Health Administration, pursuant to the provisions of section 552b(c)(6), Title 5 U.S. Code and section 10(d) of Pub. L. 92-463 (5 U.S.C. Appendix I).

* * * * *

EPIDEMIOLOGIC STUDIES REVIEW COMMITTEE

February 15-16; 9:00 a.m.
Brent Room II, Old Town Holiday Inn, 480 King Street, Old Town Alexandria, Virginia 22314.
Open—February 15; 9:00-10:00 a.m.
Closed—Otherwise.
Contact: Ms. Lavinia Walsh, Room 10C-09, Parklawn Building, 5600 Fishers Lane, Rockville, Maryland 20857, 301-443-3774.

Purpose: The Committee is charged with the initial review of grant applications for Federal assistance in the program areas administered by the National Institute of Mental Health relating to reseach and training activities in the field of epidemiology and makes recommendations to the National Advisory Mental Health Council for final review.

Agenda: From 9:00-10:00 a.m., February 15, the meeting will be open for discussion of administrative announcements and program developments. Otherwise, the Committee will be performing initial review of grant applications for Federal assistance and will not be open to the public in accordance with the determination by the Administrator, Alcohol, Drug Abuse, and Mental Health Administration, pursuant to the provisions of section 552b(c)(6), Title 5 U.S. Code and section 10(d) of Pub. L. 92-463 (5 U.S.C. Appendix I).

* * * * *

SOCIAL SCIENCES RESEARCH REVIEW COMMITTEE

February 15-17; 9:00 a.m.
Shoreham Americana Hotel, 2500 Calvert Street, N.W., Washington, D.C. 20008.
Open—February 15; 9:00-9:30 a.m.
Closed—Otherwise.
Contact: Ms. Marilyn Andersen, Room 10-95, Parklawn Building, 5600 Fishers Lane, Rockville, Maryland 20857, 301-443-3936.

Purpose: The Committee is charged with the initial review of grant applications for Federal assistance in the program areas administered by the National Institute of Mental Health relating to social science research and makes recommendations to the National Advisory Mental Health Council for final review.

Agenda: From 9:00-9:30 a.m., February 15, the meeting will be open for discussion of administrative announcements and program developments. Otherwise, the Committee will be performing initial review of grant applications for Federal assistance and will not be open to the public in accordance with the determination by the Administrator, Alcohol, Drug Abuse, and Mental Health Administration, pursuant to the provisions of section 552b(c)(6), Title 5 U.S. Code and section 10(d) of Pub. L. 92-463 (5 U.S.C. Appendix I).

* * * * *

SOCIAL WORK EDUCATION REVIEW COMMITTEE

February 20-23; 9:00 a.m.
Conference Room K, Parklawn Building, 5600 Fishers Lane, Rockville, Maryland 20857.
Open—February 20; 9:00 a.m.—1:00 p.m. and February 23; 1:00 p.m. until adjournment.
Closed—Otherwise.
Contact: Dr. Milton Wittman, Room 8C-26, Parklawn Building, 5600 Fishers Lane, Rockville, Maryland 20857, 301-443-4187.

Purpose: The Committee is charged with the initial review of grant applications for Federal assistance in the program areas administered by the National Institute of Mental Health

relating to social work education activities and makes recommendations to the National Advisory Mental Health Council for final review.

Agenda: From 9:00 a.m. to 1:00 p.m., February 20, and 1:00 p.m. to adjournment on February 23, the meeting will be open for discussion of administrative announcements and program developments. Otherwise, the Committee will be performing initial review of grant applications for Federal assistance and will not be open to the public in accordance with the determination by the Administrator, Alcohol, Drug Abuse, and Mental Health Administration, pursuant to the provisions of section 552b(c)(6), Title 5 U.S. Code and section 10(d) of Pub. L. 92-463 (5 U.S.C. Appendix I).

* * * * *

CLINICAL PROJECTS RESEARCH REVIEW COMMITTEE

February 22-24; 9:00 a.m.
Sheraton-Potomac Inn, 3 Research Court, Rockville, Maryland 20850.
Open—February 22; 9:00-10:00 a.m.
Closed—Otherwise.
Contact: Ms. Harriet German, Room 10C-05, Parklawn Building, 5600 Fishers Lane, Rockville, Maryland 20857, 301-443-3367.

Purpose: The Committee is charged with the initial review of grant applications for Federal assistance in the program areas administered by the National Institute of Mental Health relating to clinical research and makes recommendations to the National Advisory Mental Health Council for final review.

Agenda: From 9:00-10:00 a.m., February 22, the meeting will be open for discussion of administrative announcements and program developments. Otherwise, the Committee will be performing initial review of grant applications for Federal assistance and will not be open to the public in accordance with the determination by the Administrator, Alcohol, Drug Abuse, and Mental Health Administration, pursuant to the provisions of section 552b(c)(6), Title 5 U.S. Code and section 10(d) of Pub. L. 92-463 (5 U.S.C. Appendix I).

* * * * *

NEUROPSYCHOLOGY RESEARCH REVIEW COMMITTEE

February 22-24; 9:00 a.m.
Holiday Inn, Spring East Room, 8777 Georgia Avenue, Silver Spring, Maryland 20910.
Open—February 22; 9:00-10:00 a.m.
Closed—Otherwise.
Contact: Ms. Jean Pierce, Room 10C-06, Parklawn Building, 5600 Fishers Lane, Rockville, Maryland 20857, 301-443-3942.

Purpose: The Committee is charged with the initial review of grant applications for Federal assistance in the program areas administered by the National Institute of Mental Health relating to neuropsychology research and makes recommendations to the National Advisory Mental Health Council for final review.

Agenda: From 9:00-10:00 a.m., February 22, the meeting will be open for discussion of administrative announcements and program developments. Otherwise, the Committee will be performing initial review of grant applications for Federal Assistance and will not be open to the public in accordance with the determination by the Administrator, Alcohol, Drug Abuse, and Mental Health Administration, pursuant to the provisions of section 552b(c)(6), Title 5 U.S. Code and section 10(d) of Pub. L. 92-463 (5 U.S.C. Appendix I).

* * * * *

CLINICAL PSYCHOPHARMACOLOGY RESEARCH REVIEW COMMITTEE

February 26-27; 9:00 a.m.
The Georgetown Holiday Inn, 2101 Wisconsin Avenue, N.W., Washington, D.C. 20007.
Open—February 26; 9:00-10:00 a.m.
Closed—Otherwise.
Contact: Ms. Jane Gascoyne, Room 9-105, Parklawn Building, 5600 Fishers Lane, Rockville, Maryland 20857, 301-443-3568.

Purpose: The Committee is charged with the initial review of grant applications for Federal assistance in the program areas administered by the National Institute of Mental Health relating to research activities, and makes recommendations to the National Advisory Mental Health Council for final review.

Agenda: From 9:00-10:00 a.m., February 26, the meeting will be open for discussion of administrative announcements and program developments. Otherwise, the Committee will be performing initial review of grant applications for Federal assistance, and will not be open to the public in accordance with the determination by the Administrator, Alcohol, Drug Abuse, and Mental Health Administration, pursuant to the provisions of section 552b(c)(6), Title 5 U.S. Code and section 10(d) of Pub. L. 92-463 (5 U.S.C. Appendix I).

* * * * *

ALCOHOL RESEARCH REVIEW COMMITTEE

February 28-March 2; 9:00 a.m.
Bethesda Holiday Inn, Bethesda Maryland 20014.
Open—February 28; 9:00-10:00 a.m.
Closed—Otherwise.
Contact: Dr. James C. Teegarden, Room 16C-26, Parklawn Building, 5600 Fishers Lane, Rockville, Maryland 20857.

Purpose: The Committee is charged with the initial review of grant applications for Federal assistance in the program areas administered by the National Institute of Alcohol Abuse and Alcoholism relating to research activities and makes recommendations to the National Advisory Council on Alcohol Abuse and Alcoholism for final review.

Agenda: From 9:00-10:00 a.m., February 28, the meeting will be open for discussion of administrative announcements and program developments. Otherwise, the Committee will be performing initial review of grant applications for Federal assistance, and will not be open to the public in accordance with the determination by the Administrator, Alcohol, Drug Abuse, and Mental Health Administration, pursuant to the provisions of section 552b(c)(6), Title 5 U.S. Code and section 10(d) of Pub. L. 92-463 (5 U.S.C. Appendix I).

Substantive program information may be obtained from the contact persons listed above. The NIAAA information Officer who will furnish upon request summaries of the meeting and rosters of the Committee members is Mr. Harry Bell, Director, Office of Public Affairs, NIAAA, Room 11A-17, Parklawn Building, 5600 Fishers Lane, Rockville, Maryland 20857, 301-443-3306. The NIMH Information Officer who will furnish upon request summaries of the meeting and rosters of the Committee members is Dr. Jacquelyn Hall, Acting Chief, Public Information Branch, Division of Scientific and Public Information, NIMH, Room 15C-17, Parklawn Building, Rockville, Maryland 20857, 301-443-4573.

Dated: January 12, 1979.

ELIZABETH A. CONNOLLY,
*Committee Management Officer, Alcohol, Drug Abuse, and Mental Health Administration.*

[FR Doc. 79-1735 Filed 1-17-79; 8:45 am]

---

[4110-88-M]

## ADVISORY COMMITTEES

### Meeting

In accordance with section 10(a)(2) of the Federal Advisory Committee Act (5 U.S.C. Appendix I), announcement is made of the following National Advisory body scheduled to assemble during the month of Februry 1979:

MINORITY ADVISORY COMMITTEE, ADAMHA

February 7-9, 1979—OPEN MEETING
February 7, 1:00 p.m.; February 8-9, 9:00 a.m., room 17-09B, Parklawn Building, 5600 Fishers Lane, Rockville, Md. 20857.
Contact: Mr. Ernest Hurst, Room 13C-15, Parklawn Building, 5600 Fishers Lane, Rockville, Md. 20857, 301-443-3838.

Purpose: The Minority Advisory Committee, ADAMHA, advises the Secretary, Department of Health, Education, and Welfare, and the Administrator, Alcohol, Drug Abuse, and

Mental Health Administration, on needs, programs, and activities regarding minority alcohol, drug abuse, and mental health matters, and makes recommendations for possible solutions which meet the needs and concerns of minority groups throughout the United States. The Committee functions in an advisory capacity to the Administrator, ADAMHA, on these matters which relate to the National Institute on Alcohol Abuse and Alcoholism, the National Institute on Drug Abuse, and the National Institute of Mental Health.

Agenda: On February 7, the Committee will discuss recommendations concerning minority issues from the State and Territorial Alcohol, Drug Abuse, and Mental Health Conference, and response to first phase of Minority Manpower Development and Training Report. The remainder of the meeting will include meetings with Institute Directors; discussion of issues related to the proposed Mental Health Systems Act; Regional Office liaison activities; and plans for the Second Annual National Conference on Minority Group Alcohol, Drug Abuse, and Mental Health Issues. Agenda items are subject to change as priorities dictate.

Mr. James C. Helsing, Deputy Director, Office of Public Affairs, ADAMHA, will furnish, on request, summaries of the meeting and a roster of the Committee members. Mr. Helsing is located in Room 6C-15, Parklawn Building, 5600 Fishers Lane, Rockville, Maryland 20857, 301-443-3783.

Dated: January 11, 1979.

ELIZABETH A. CONNOLLY,
*Committee Management Officer, Alcohol, Drug Abuse, and Mental Health Administration.*

[FR Doc. 79-1736 Filed 1-17-79; 8:45 am]

---

[4110-88-M]

## ADVISORY COMMITTEE

### Meeting

In accordance with section 10(a)(2) of the Federal Advisory Committee Act (5 U.S.C. Appendix I), announcement is made of the following National Advisory body scheduled to assemble during the month of February 1979:

NATIONAL ADVISORY MENTAL HEALTH COUNCIL

February 5-7; 9:30 a.m.
Conference Rooms A and F, Parklawn Building, 5600 Fishers Lane, Rockville, Maryland 20857
OPEN—February 5. This is the policy session of Council and it will be convened in Conference Room F.
CLOSED—February 6-7. Both of these closed meetings of Council will be convened in Conference Room A.
Contact: Ms. Zelia Diggs, Room 11-101, Parklawn Building, 5600 Fishers Lane, Rockville, Maryland 20857, 301-443-4333.

Purpose: The National Advisory Mental Health Council advises the Secretary, Department of Health, Education, and Welfare, the Administrator, Alcohol, Drug Abuse, and Mental Health Administration, and the Director, National Institute of Mental Health, regarding the policies and programs of the Department in the field of mental health. The Council reviews applications for grants-in-aid relating to research, training, and services in the field of mental health and makes recommendations to the Secretary with respect to approval of applications for, and the amount of, these grants.

Agenda: On February 5, the meeting will be open for discussion of NIMH policy issues. These will include current administrative, legislative and program developments. Otherwise, the Council will conduct a final review of grant applications for Federal assistance and this session will not be open to the public in accordance with the determination by the Administrator, Alcohol, Drug Abuse, and Mental Health Administration, pursuant to the provisions set forth in section 552 (c)(6), Title 5 U.S. Code and section 10(d) of Pub. L. 92-463 (5 U.S.C. Appendix I).

Substantive information may be obtained from the contact person listed above. Attendance by the public will be limited to space available.

The NIMH Information Officer who will furnish upon request summaries of the meeting and rosters of the Council members is Mr. Paul Sirovatka, Acting Chief, Public Information Branch, Division of Scientific and Public Information, NIMH, Room 15-105, Parklawn Building, 5600 Fishers Lane, Rockville, Maryland 20857, 301-443-4536.

Dated: January 12, 1979.

ELIZABETH A. CONNOLLY,
*Committee Management Officer, Alcohol, Drug Abuse, and Mental Health Administration.*

[FR Doc. 79-1737 Filed 1-17-79; 8:45 am]

---

[4110-88-M]

## ADVISORY COMMITTEES

### Meetings

In accordance with section 10(a)(2) of the Federal Advisory Committee Act (5 U.S.C. Appendix I), announcement is made of the following National Advisory bodies scheduled to assemble during the month of February 1979:

DEVELOPMENTAL PROBLEMS RESEARCH REVIEW COMMITTEE

February 1-2; 9:00 a.m.
Lobby Room, Holiday Inn, 5520 Wisconsin Avenue, Chevy Chase, Maryland 20015
OPEN—February 1; 9:00-10:00 a.m.
CLOSED—Otherwise.
Contact: Ms. Diana Souder, Room 10-104, Parklawn Building, 5600 Fishers Lane, Rockville, Maryland 20857, 301-443-3566.

Purpose: The Committee is charged with the initial review of grant applications for Federal assistance in the program areas administered by the National Institute of Mental Health relating to the developmental growth of juveniles and makes recommendations to the National Advisory Mental Health Council for final review.

Agenda: From 9:00-10:00 a.m., February 1, the meeting will be open for discussion of administrative announcements and program developments. Otherwise, the Committee will be performing initial review of grant applications for Federal assistance and will not be open to the public in accordance with the determination by the Administrator, Alcohol, Drug Abuse, and Mental Health Administration, pursuant to the provisions of section 552b(c)(6), Title 5 U.S. Code and section 10(d) of Pub. L. 92-463 (5 U.S.C. Appendix I).

* * * * *

DRUG ABUSE TRAINING REVIEW COMMITTEE.

February 1-2; 9:00 a.m.
Conference Room B, Parklawn Building, 5600 Fishers Lane, Rockville, Maryland 20857.
OPEN—February 1; 9:00-10:00 a.m.
CLOSED—Otherwise.
Contact: Mr. James F. Callahan, Room 10A-46, Parklawn Building, 5600 Fishers Lane, Rockville, Maryland 20857, 301-443-6720.

Purpose: The Committee is charged with the initial review of grant applications for Federal assistance in the program areas administered by the National Institute on Drug Abuse relating to Drug Abuse Training Activities and makes recommendations to the National Advisory Council on Drug Abuse for final review.

Agenda: From 9:00-10:00 a.m., February 1, the meeting will be open for discussion of administrative announcements and program developments. Otherwise, the Committee will be performing initial review of grant applications for Federal assistance and will not be open to the public in accordance with the determination by the Administrator, Alcohol, Drug Abuse, and Mental Health Administration, pursuant to the provisions of section 552b(c)(6), Title 5 U.S. Code and section 10(d) of Pub. L. 92-463 (5 U.S.C. Appendix I).

* * * * *

MENTAL HEALTH SMALL GRANT COMMITTEE

February 1-3; 1:00 p.m.
Board Room and Chef's Corner, Shoreham Americana Hotel, 2500 Calvert Street, N.W., Washington, D.C. 20008.
OPEN—February 1; 1:00-2:00 p.m.
CLOSED—Otherwise.
Contact: Ms. Mary E. Enyart, Room 10C-14, Parklawn Building, 5600 Fishers Lane, Rockville, Maryland 20857, 301-443-4337.

Purpose: The Committee is charged with the initial review of small grant applications for Federal assistance in all disciplines relevant to the National Institute of Mental Health and for small grant projects submitted for support to the other Institutes of the Alcohol, Drug Abuse, and Mental Health Administration, and makes recommendations to the National Advisory Councils of the respective Institutes for final review.

Agenda: From 1:00-2:00 p.m., February 1, the meeting will be open for discussion of administrative announcements and program developments. Otherwise, the Committee will be performing initial review of grant applications for Federal assistance and will not be open to the public in accordance with the determination by the Administrator, Alcohol, Drug Abuse, and Mental Health Administration, pursuant to the provisions of section 552b(c)(6), Title 5 U.S. Code and section 10(d) of Pub. L. 92-463 (5 U.S.C. Appendix I).

* * * * *

METROPOLITAN MENTAL HEALTH PROBLEMS REVIEW COMMITTEE

February 1-3; 9:00 a.m.
The Colonial Room, Shoreham Americana Hotel, 2500 Calvert Street, N.W., Washington, D.C. 20008
OPEN—February 1; 9:00-9:30 a.m.
CLOSED—Otherwise
Contact: Ms. Phyllis Pinzow, Room 15-99, Parklawn Building, 5600 Fishers Lane, Rockville, Maryland 20857, 301-443-3373.

Purpose: The Committee is charged with the initial review of grant applications for Federal assistance in the program areas administered by the National Institute of Mental Health relating to metropolitan mental health problems and makes recommendations to the National Advisory Mental Health Council for final review.

Agenda: From 9:00-9:30 a.m., February 1, the meeting will be open for discussion of administrative announcements and program developments. Otherwise, the Committee will be performing initial review of grant applications for Federal assistance and will not be open to the public in accordance with the determination by the Administrator, Alcohol, Drug Abuse, and Mental Health Administration, pursuant to the provisions of section 552b(c)(6), Title 5 U.S. Code and section 10(d) of Pub. L. 92-463 (5 U.S.C. Appendix I).

* * * * *

MENTAL HEALTH SERVICES RESEARCH REVIEW COMMITTEE

February 5-7; 9:00 a.m.
Lobby Room, Holiday Inn, 5520 Wisconsin Avenue, Chevy Chase, Maryland 20015
OPEN—February 5; 9:00-10:00 a.m.
CLOSED—Otherwise
Contact: Mr. James T. Cumiskey, Room 11C-17, Parklawn Building, 5600 Fishers Lane, Rockville, Maryland 20857, 301-443-3754.

Purpose: The Committee is charged with the initial review of grant applications for Federal assistance in the program areas administered by the National Institute of Mental Health relating to mental health services research and makes recommendations to the National Advisory Mental Health Council for final review.

Agenda: From 900-10:00 a.m., February 5, the meeting will be open for discussion of administrative announcements and program developments. Otherwise, the Committee will be performing initial review of grant applications for Federal assistance and will not be open to the public in accordance with the determination by the Administrator, Alcohol, Drug Abuse, and Mental Health Administration, pursuant to the provisions of section 552b(c)(6), Title 5 U.S. Code and section 10(d) of Pub. L. 92-463 (5 U.S.C. Appendix I).

* * * * *

DRUG ABUSE RESEARCH REVIEW COMMITTEE

February 5-9; 9:00 a.m.
Conference Rooms G, I, & K, Parklawn Building, 5600 Fishers Lane, Rockville, Maryland 20857
OPEN—February 5; 9:00-9:30 a.m.
CLOSED—Otherwise
Contact: Ms. Lucy Stevens, Room 9-46, Parklawn Building, 5600 Fishers Lane, Rockville, Maryland 20857, 301-443-6664.

Purpose: The Committee is charged with the initial review of grant applications for Federal assistance in the program areas administered by the National Institute on Drug Abuse relating to research activities and makes recommendations to the National Advisory Council on Drug Abuse for final review.

Agenda: From 9:00-9:30 a.m., February 5, the meeting will be open for discussion of administrative announcements and program developments. Otherwise, the Committee will be performing initial review of grant applications for Federal assistance and will not be open to the public, in accordance with the determiniation by the Administrator, Alcohol, Drug Abuse, and Mental Health Administration, pursuant to the provisions of section 552(b)(c)(6), Title 5 U.S. Code and section 10(d) of Pub. L. 92-463 (5 U.S.C. Appendix I).

* * * * *

PSYCHOLOGY EDUCATION REVIEW COMMITTEE

February 8-10; 9:00 a.m.
Conference Room A, Parklawn Building, 5600 Fishers Lane, Rockville, Maryland 20857
OPEN—February 8; 9:00-11:00 a.m.
CLOSED—Otherwise
Contact: Ms. Betty Wells, Room 9C-23, Parklawn Building, 5600 Fishers Lane, Rockville, Maryland 20857, 301-443-3536.

Purpose: The Committee is charged with the initial review of grant applications for Federal assistance in the program areas administered by the National Institute of Mental Health relating to psychology training activities and makes recommendations to the National Advisory Mental Health Council for final review.

Agenda: From 9:00-11:00 a.m., February 8, the meeting will be open for discussion of administrative announcements and program developments. Otherwise, the Committee will be performing initial review of grant applications for Federal assistance and will not be open to the public in accordance with the determination by the Administrator, Alcohol, Drug Abuse, and Mental Health Administration, pursuant to the provisions of section 552b(c)(6), Title 5 U.S. Code and section 10(d) of Pub. L. 92-463 (5 U.S.C. Appendix I).

* * * * *

PERSONALITY AND COGNITION RESEARCH REVIEW COMMITTEE

February 9-11; 9:00 a.m.
Ohio Room, The Capitol Hilton, 16th and K Streets, N.W., Washington, D.C. 20036
OPEN—February 9; 9:00-10:00 a.m.
CLOSED—Otherwise
Contact: Ms. Shirley; Maltz, Room 10C-06, Parklawn Building, 5600 Fishers Lane, Rockville, Maryland 20857, 301-443-3942.

Purpose: The Committee is charged with the initial review of grant applications for Federal assistance in the program areas administered by the National Institute of Mental Health relating to research activities and makes recommendations to the National Advisory Mental Health Council for final review.

Agenda: From 9:00-10:00 a.m., February 9, the meeting will be open for discussion of administrative announcements and program developments. Otherwise, the Committee will be performing initial review of grant applications for Federal assistance and will not be open to the public in accordance with the determination by the Administrator, Alcohol, Drug Abuse, and Mental Health Administration, pursuant to the provisions of section

552b(c)(6), Title 5 U.S. Code and section 10(d) of Pub. L. 92-463 (5 U.S.C. Appendix I).

* * * * *

PSYCHIATRIC NURSING EDUCATION REVIEW COMMITTEE

13-16; 9:00 a.m.
Conference Room A, Parklawn Building, 5600 Fishers Lane, Rockville, Maryland 20857
OPEN—February 13; 9:00 a.m.-1:00 p.m.
CLOSED—Otherwise
Contact: Dr. Jeanette Chamberlain, Room 9C-24, Parklawn Building, 5600 Fishers Lane, Rockville, Maryland 20857, 301-443-4423.

Purpose: The Committee is charged with the initial review of grant applications for Federal assistance in the program areas administered by the National Institute of Mental Health relating to psychiatric nursing manpower development and makes recommendations to the National Advisory Mental Health Council for final review.

Agenda: From 9:00-1:00 p.m., February 13, the meeting will be open for discussion of administrative announcements and program developments. Otherwise, the Committee will be performing initial review of grant applications for Federal assistance and will not be open to the public in accordance with the determination by the Administrator, Alcohol, Drug Abuse, and Mental Health Administration, pursuant to the provisions of section 552b(c)(6), Title 5 U.S. Code and section 10(d) of Pub. L. 92-463 (5 U.S.C. Appendix I).

* * * * *

PSYCHIATRY EDUCATION REVIEW COMMITTEE

February 13-16; 10:00 a.m.
Conference Room M, Parklawn Building, 5600 Fishers Lane, Rockville, Maryland 20857
OPEN—February 13; 10:00-11:00 a.m.
CLOSED—Otherwise
Contact: Ms. Constance M. Verney, Room 8C-12, Parklawn Building, 5600 Fishers Lane, Rockville, Maryland 20857, 301-443-2120.

Purpose: The Committee is charged with the initial review of grant applications for Federal assistance in the program areas administered by the National Institute of Mental Health relating to psychiatry education and makes recommendations to the National Advisory Mental Health Council for final review.

Agenda: From 10:00-11:00 a.m., February 13, the meeting will be open for discussion of administrative announcements and program developments. Otherwise, the Committee will be performing initial review of grant applications for Federal assistance and will not be open to the public in accordance with the determination by the Administrator, Alcohol, Drug Abuse, and Mental Health Administration, pursuant to the provisions of section 552b(c)(6), Title 5 U.S. Code and section 10(d) of Pub. L. 92-463 (5 U.S.C. Appendix I).

* * * * *

EXPERIMENTAL AND SPECIAL TRAINING REVIEW COMMITTEE

February 14-16; 9:00 a.m.
Conference Room B, Parklawn Building, 5600 Fishers Lane, Rockville, Maryland 20857
Open—February 14; 11:30-12:30 p.m.
Closed—Otherwise
Contact: Dr. Ralph Simon, Room 8-95, Parklawn Building, 5600 Fishers Lane, Rockville, Maryland 20857, 301-443-3893.

Purpose: The Committee is charged with the initial review of grant applications for Federal assistance in the program areas administered by the National Institute of Mental Health relating to experimental and special training activities and makes recommendations to the National Advisory Mental Health Council for final review.

Agenda: From 11:30-12:30 p.m., February 14, the meeting will be open for discussion of administrative announcements and program developments. Otherwise, the Committee will be performing initial review of grant applications for Federal assistance and will not be open to the public in accordance with the determination by the Administrator, Alcohol, Drug Abuse, and Mental Health Administration, pursuant to the provisions of section 552b(c)(6), Title 5 U.S. Code and section 10(d) of Pub. L. 92-463 (5 U.S.C. Appendix I).

* * * * *

MINORITY GROUP MENTAL HEALTH PROGRAMS REVIEW COMMITTEE

February 15-17; 9:00 a.m.
Parkview Room, Gramercy Inn, 1616 Rhode Island Avenue, Washington, D.C. 20036
Open—February 15; 9:00-11:00 a.m.
Closed—Otherwise
Contact: Ms. Edna M. Hardy Hill, Room 7-103, Parklawn Building, 5600 Fishers Lane, Rockville, Maryland 20857, 301-443-2988.

Purpose: The Committee is charged with the initial review of grant applications for Federal assistance in the program areas administered by the National Institute of Mental Health relating to minority mental health research and training and makes recommendations to the National Advisory Mental Health Council for final review.

Agenda: From 9:00-11:00 a.m., February 15, the meeting will be open for discussion of administrative announcements and program developments. Otherwise, the Committee will be performing initial review of grant applications for Federal assistance and will not be open to the public in accordance with the determination by the Administrator, Alcohol, Drug Abuse, and Mental Health Administration, pursuant to the provisions of section 552b(c)(6), Title 5 U.S. Code and section 10(d) of Pub. L. 92-463 (5 U.S.C. Appendix I).

* * * * *

EXPERIMENTAL PSYCHOLOGY RESEARCH REVIEW COMMITTEE

February 19-22; 9:00 a.m.
Shoreham Americana Hotel, 2500 Calvert Street, N.W., Washington, D.C. 20008
Open—February 19; 9:00-9:30 a.m.
Closed—Otherwise
Contact: Mr. John T. Hammack, Room 10-95, Parklawn Building, 5600 Fishers Lane, Rockville, Maryland 20857, 301-443-3936.

Purpose: The Committee is charged with the initial review of grant applications for Federal assistance in the program areas administered by the National Institute of Mental Health relating to experimental psychology research and makes recommendations to the National Advisory Mental Health Council for final review.

Agenda: From 9:00-9:30 a.m., February 19, the meeting will be open for discussion of administrative announcements and program developments. Otherwise, the Committee will be performing initial review of grant applications for Federal assistance and will not be open to the public in accordance with the determination by the Administrator, Alcohol, Drug Abuse, and Mental Health Administration, pursuant to the provisions of section 552b(c)(6), Title 5 U.S. Code and section 10(d) of Pub. L. 92-463 (5 U.S.C. Appendix I).

* * * * *

PARAPROFESSIONAL MANPOWER DEVELOPMENT REVIEW COMMITTEE

February 21-23; 9:00 a.m.
Conference Room M, Parklawn Building, 5600 Fishers Lane, Rockville, Maryland 20857
Open—February 21; 9:00-11:00 a.m.
Closed—Otherwise
Contact: Mr. Donald L. Fisher, Room 8C-02, Parklawn Building, 5600 Fishers Lane, Rockville, Maryland 20857, 301-443-1333.

Purpose: The Committee is charged with the initial review of grant applications for Federal assistance in the program areas administered by the National Institute of Mental Health relating to paraprofessional manpower development and makes recommendations to the National Advisory Mental Health Council for final review.

Agenda: From 9:00-11:00 a.m., February 21, the meeting will be open for discussion of administrative announce-

ments and program developments. Otherwise, the Committee will be performing initial review of grant applications for Federal assistance and will not be open to the public in accordance with the determination by the Administrator, Alcohol, Drug Abuse, and Mental Health Administration, pursuant to the provisions of section 552b(c)(6), Title 5 U.S. Code and section 10(d) of Pub. L. 92-463 (5 U.S.C. Appendix I).

* * * * *

PSYCHOLOGY EDUCATION REVIEW COMMITTEE

February 21-24; 9:00 a.m.
Conference Room A, Parklawn Building, 5600 Fishers Lane, Rockville, Maryland 20857
Open—February 21; 9:00-11:00 a.m.
Closed—Otherwise
Contact: Ms. Betty Wells, Room 9C-23, Parklawn Building, 5600 Fishers Lane, Rockville, Maryland 20857, 301-443-3536.

Purpose: The Committee is charged with the initial review of grant applications for Federal assistance in the program areas administered by the National Institute of Mental Health relating to psychology training activities and makes recommendations to the National Advisory Mental Health Council for final review.

Agenda: From 9:00-11:00 a.m., February 21, the meeting will be open for discussion of administrative announcements and program developments. Otherwise, the Committee will be performing initial review of grant applications for Federal assistance and will not be open to the public in accordance with the determination by the Administrator, Alcohol, Drug Abuse, and Mental Health Administration, pursuant to the provisions of section 552b(c)(6), Title 5 U.S. Code and section 10(d) of Pub. L. 92-463 (5 U.S.C. Appendix I).

* * * * *

RESEARCH SCIENTIST DEVELOPMENT REVIEW COMMITTEE

February 22-24; 9:00 a.m.
Sheraton-Park Hotel, 2660 Woodley Road, N.W., Washington, D.C. 20009
OPEN—February 22; 9:00-11:00 a.m.
CLOSED—Otherwise
Contact: Ms. Barbara Ann Spelman, Room 9C-18, Parklawn Building, 5600 Fishers Lane, Rockville, Maryland 20857, 301-433-4347.

Purpose: The Committee is charged with the initial review of grant applications for Research Scientist Development Awards and Research Scientist Awards administered by the National Institute of Mental Health and makes recommendations to the National Advisory Mental Health Council for final review.

Agenda: From 9:00-11:00 a.m., February 22, the meeting will be open for discussion of administrative announcements and program developments. Otherwise, the Committee will be performing initial review of grant applications for Federal assistance and will not be open to the public in accordance with the determination by the Administrator, Alcohol, Drug Abuse, and Mental Health Administration, pursuant to the provisions of section 552b(c)(6), Title 5 U.S. Code and section 10(d) of Pub. L. 92-463 (5 U.S.C. Appendix I).

* * * * *

COMMUNITY ALCOHOLISM SERVICES REVIEW COMMITTEE

February 23-26; 8:30 a.m.
Holiday Inn, 8120 Wisconsin Avenue, Bethesda, Maryland 20014
OPEN—February 23; 8:30-10:00 a.m.
CLOSED—Otherwise
Contact: Mr. Sidney Leopold, Room 11-10, Parklawn Building, 5600 Fishers Lane, Rockville, Maryland 20857, 301-443-1374.

Purpose: The Committee is charged with the initial review of grant applications for Federal assistance in the program areas administered by the National Institute on Alcohol Abuse and Alcoholism relating to alcoholism services activities and makes recommendations to the National Advisory Council on Alchohol Abuse and Alcoholism for final review.

Agenda: From 8:30-10:00 a.m., February 23, the meeting will be open for discussion of administrative announcements and program developments. Otherwise, the Committee will be performing initial review of grant applications for Federal assistance and will not be open to the public in accordance with the determination by the Administrator, Alcohol, Drug Abuse, and Mental Health Administration, pursuant to the provisions of section 552b(c)(6), Title 5 U.S. Code and section 10(d) of Pub. L. 92-463 (5 U.S.C. Appendix I).

* * * * *

PRECLINICAL PSYCHOPHARMACOLOGY RESEARCH REVIEW COMMITTEE

February 26-27; 9:00 a.m.
Connecticut Inn Motel, 4400 Connecticut Avenue, N.W., Washington, D.C. 20008
OPEN—February 26; 9:00-9:30 a.m.
CLOSED—Otherwise
Contact: Ms. Allyson Rowell, Room 9-97, Parklawn Building, 5600 Fishers Lane, Rockville, Maryland 20857, 301-433-3454.

Purpose: The committee is charged with the initial review of grant applications for Federal assistance in the program areas administered by the National Institute of Mental Health relating to preclinical psychopharmacology research and makes recommendations to the National Advisory Mental Health Council for final review.

Agenda: From 9:00-9:30 a.m., February 26, the meeting will be open for discussion of administrative announcements and program developments. Otherwise, the Committee will be performing initial review of grant applications for Federal assistance and will not be open to the public in accordance with the determination by the Administrator, Alcohol, Drug Abuse, and Mental Health Administration, pursuant to the provisions of section 552b(c)(6), Title 5 U.S. Code and section 10(d) of Pub. L. 92-463 (5 U.S.C. Appendix I).

* * * * *

SOCIAL PROBLEMS RESEARCH REVIEW COMMITTEE

February 26-27; 9:00 a.m.
Plaza Suite, Dupont Plaza Hotel, Washington, D.C. 20036
OPEN—February 26; 9:00-9:30 a.m.
CLOSED—Otherwise
Contact: Ms. Vi Kemp, Room 10-104, Parklawn Building, 5600 Fishers Lane, Rockville, Maryland 20857, 301-443-4843.

Purpose: The Committee is charged with the initial review of grant applications for Federal assistance in the program areas administered by the National Institute of Mental Health relating to the field of social problems and makes recommendations to the National Advisory Mental Health Council for final review.

Agenda: From 9:00-9:30 a.m., February 26, the meeting will be open for discussion of administrative announcements and program developments. Otherwise, the Committee will be performing initial review of grant applications for Federal assistance and will not be open to the public in accordance with the determination by the Administrator, Alcohol, Drug Abuse, and Mental Health Administration, pursuant to the provisions of section 552b(c)(6), Title 5 U.S. Code and section 10(d) of Pub. L. 92-463 (5 U.S.C. Appendix I).

* * * * *

SOCIAL SCIENCES TRAINING REVIEW COMMITTEE

February 26-28; 9:00 a.m.
Conference Room I, Parklawn Building, 5600 Fishers Lane, Rockville, Maryland 20857.
OPEN—February 26; 9:00-11:00 a.m.
CLOSED—Otherwise
Contact: Ms. Miriam Stein, Room 9C-15, Parklawn Building, 5600 Fishers Lane, Rockville, Maryland 20857, 301-443-3857.

Purpose: The Committee is charged with the initial review of grant applications for Federal assistance in the program areas administered by the National Institute of Mental Health relating to social sciences training and makes recommendations to the Na-

tional Advisory Mental Health Council for final review.

Agenda: From 9:00-11:00 a.m., February 26, the meeting will be open for discussion of administrative announcements and program developments. Otherwise, the Committee will be performing initial review of grant applications for Federal assistance and will not be open to the public in accordance with the determination by the Administrator, Alcohol, Drug Abuse, and Mental Health Administration, pursuant to the provisions of section 552b(c)(6), Title 5 U.S. Code and section 10(d) of Pub. L. 92-463 (5 U.S.C. Appendix I).

Substantive program information may be obtained from the contact persons listed above. The NIAAA Information Officer who will furnish upon request summaries of the meeting and rosters of the committee members is Mr. Harry Bell, Associate Director, Office of Public Affairs, NIAAA, Room 11A-17, Parklawn Building, 5600 Fishers Lane, Rockville, Maryland 20857, 301-443-3306. The NIDA Information Officer who will furnish upon request summaries of the meeting and rosters of the committee members is Ms. Mary Carol Kelly, Program Information Officer for Drug Abuse, NIDA, Room 10-18, Parklawn Building, 5600 Fishers Lane, Rockville, Maryland 20857, 301-443-6245. The NIMH Information Officer who will furnish upon request summaries of the meeting and rosters of the committee members is Dr. Jacquelyn Hall, Acting Chief, Public Information Branch, Division of Scientific and Public Information, NIMH, Room 15C-17, Parklawn Building, 5600 Fishers Lane, Rockville, Maryland 20857, 301-443-4573.

Dated: January 12, 1979.

ELIZABETH A. CONNOLLY,
*Committee Management Officer, Alcohol, Drug Abuse, and Mental Health Administration.*

[FR Doc. 79-1738 Filed 1-17-79; 8:45 am]

---

[4110-87-M]

**Center for Disease Control**

**EPIDEMIOLOGIC STUDY OF PORTSMOUTH NAVAL SHIPYARD**

**Open Meeting**

The following meeting will be convened by the National Institute for Occupational Safety and Health of the Center for Disease Control and will be open to the public, limited only by the space available:

Date: January 30, 1979.

Time: 9:00 a.m. to 6:00 p.m.

Place: Room 2003A, JFK Federal Building, Government Center, Boston, Massachusetts 02203.

Purpose: To discuss protocol for the epidemiologic study of civilian employees at the Portsmouth Naval Shipyard.

Additional information may be obtained from:

Mr. Philip J. Bierbaum, Division of Surveillance, Hazard Evaluations and Field Studies, National Institutes for Occupational Safety and Health, Center for Disease Control, 4676 Columbia Parkway, Cincinnati, Ohio 45226. Telephone: 513/684-2422.

Dated: January 9, 1979.

WILLIAM C. WATSON, JR.,
*Acting Director, Center for Disease Control.*

[FR Doc. 79-1775 Filed 1-17-79; 8:45 am]

---

[4110-39-M]

**National Institute of Education**

**PANEL FOR THE REVIEW OF LABORATORY AND CENTER OPERATION**

**Meeting**

Notice is hereby given that the next meeting of the Panel for the Review of Laboratory and Center Operations will be held on February 3-4, in room 800-A of the Carnegie Endowment for International Peace, 11 Dupont Circle, N.W., Washington, D.C. The Panel will meet from 1:00 p.m. until 5:00 p.m. on February 3 and from 9:00 a.m. until approximately 3:00 p.m. on February 4.

The Panel for the Review of Laboratory and Center Operations is established under Section 405 of the General Education Provisions Act as amended by Section 403(d) of the Education Amendments Act of 1976, 20 U.S.C. 1221e. Its functions include:

(a) Preparing recommendations on initial long-range funding and program plans submitted by the 17 educational laboratories and research and development centers;

(b) Reviewing and assessing the operations of the laboratories and centers and making recommendations for the improvement and continuation of the individual laboratories and centers and for the support of new laboratories and centers.

The meeting will have two main purposes: discussion of reactions to the Panel's final report, which was submitted to the Director of the National Institute of Education on December 15, 1978 and to the Congress on January 15, 1979; and discussion and planning of future Panel activities, which will include making recommendations on the establishment of new laboratories and centers as well as further inquiry into issues of dissemination and equality of educational opportunity.

This meeting immediately follows a meeting of the National Council on Educational Research (NCER) to which the Panel is invited to discuss its final report. That meeting will be held on February 3, 1979 from 9—11 a.m., in room 823 of the National Institute of Education, 1200 19th St. N.W.

The following agenda gives a tentative outline of the Panel's meeting:

SATURDAY, FEBRUARY 3

1:00-2:00 Convene. Discussion of NIE and NCER reactions to the Panel's final report.
2:00-3:00 Discussion with NIE on current plans for the establishment of new laboratories and centers and other means of providing R&D services.
3:00-3:15 Break.
3:15-5:00 Discussion of issues related to the establishment of new laboratories and centers.

SUNDAY, FEBRUARY 4

9:00-10:30 Discussion of issues related to dissemination.
10:30-10:45 Break.
10:45-12:00 Discussion of issues related to equality of educational opportunity.
12:00-1:00 Lunch.
1:00-3:00 Planning and scheduling of future meetings.

The entire meeting will be open to the public. Interested persons are invited to attend the session. Written statements relevant to an agenda item or any topic deemed of interest to the Panel may be submitted to the Panel staff at the address below.

Copies of the records of all Panel proceedings may be obtained through the office of the Panel Staff. Minutes require approval by the Panel at a subsequent meeting and are available to the public two weeks following their approval.

In order to verify the tentative agenda, or assure adequate seating arrangements, persons likely to attend the Panel meeting may contact the Panel Staff Office as indicated below:

Panel for the Review of Laboratory and Center Operations,
National Institute of Education Washington, D.C. 20208 (202) 254-5830 or 254-5306.

Dated: January 15, 1979.

GRADY MCGONAGILL,
*Staff Director, Panel for the Review of Laboratory and Centers Operations.*

[FR Doc. 79-1759 Filed 1-17-79; 8:45 am]

[4310-84-M]

## DEPARTMENT OF THE INTERIOR

### Bureau of Land Management

[NM 35702, 35703 and 35697]

### NEW MEXICO

### Applications

JANUARY 9, 1979.

Notice is hereby given that, pursuant to Section 28 of the Mineral Leasing Act of 1920 (30 U.S.C. 185), as amended by the Act of November 16, 1973 (87 Stat. 576), El Paso Natural Gas Company has applied for three 4½-inch natural gas pipeline and related facilities rights-of-way across the following land:

NEW MEXICO PRINCIPAL MERIDIAN, NEW MEXICO

T. 31 N., R. 10 W.,
Sec. 1, lots 11 and 14;
Sec. 24, lots 2 and 9.

These pipelines will convey natural gas across 0.407 of a mile of public land in San Juan County, New Mexico.

The purpose of this notice is to inform the public that the Bureau will be proceeding with consideration of whether the applications should be approved, and if so, under what terms and conditions.

Interested persons desiring to express their views should promptly send their name and address to the District Manager, Bureau of Land Management, P.O. Box 6770, Albuquerque, New Mexico 87107.

RAUL E. MARTINEZ,
*Acting Chief, Branch of Lands and Minerals Operations.*

[FR Doc. 79-1726 Filed 1-17-79; 8:45 am]

---

[4310-84-M]

### NEW MEXICO WILDERNESS INVENTORY

### Commencement and Schedule of Inventory

JANUARY 10, 1979.

AGENCY: Bureau of Land Management.

ACTION: Notice.

SUMMARY: The New Mexico State Office of the Bureau of Land Management announces the initiation of the systematic inventory of all public lands, administered by the Bureau of Land Management in New Mexico, to determine which areas may possess wilderness characteristics and should be subjected to an intensive wilderness inventory and which areas clearly and obviously do not possess wilderness characteristics and should be deleted from further wilderness consideration. This inventory is directed by the Federal Land Policy and Management Act of 1976. The initial inventory is expected to be completed by March 12, 1979 at which time a 90-day review period to comment on preliminary findings will begin. The inventory will be conducted using procedures outlined in the Wilderness Inventory Handbook published September 27, 1978. Copies of these procedures are available on request from the State Office, Bureau of Land Management.

DATES: Comments on the initial inventory should be submitted between March 12, 1979 and June 9, 1979. A schedule of open houses and public meetings associated with the 90-day public review period between March 12, 1979 and June 9, 1979, will be announced on or before February 2, 1979 by the State Office, Bureau of Land Management. Specific information on the open houses or public meetings may be obtained by contacting any Bureau of Land Management office in New Mexico, after February 2, 1979.

ADDRESS: Send comments and requests to: State Director (930), Bureau of Land Management, United States Post Office and Federal Building, South Federal Place, P.O. Box 1449, Santa Fe, New Mexico 87501.

FOR FURTHER INFORMATION CONTACT:

Dan Wood at the above Santa Fe, New Mexico address or call 505-988-6227.

LARRY L. WOODARD,
*Acting State Director.*

[FR Doc. 79-1725 Filed 1-17-79; 8:45 am]

---

[4310-84-M]

### NEW MEXICO WILDERNESS INVENTORY

### Star Lake-Bisti Accelerated Wilderness Inventories

JANUARY 10, 1979.

AGENCY: Bureau of Land Management, Interior.

ACTION: Notice of inventory recommendations and commencement of public review period.

SUMMARY: The New Mexico State Office of the Bureau of Land Management announces the initial wilderness inventory recommendations for the public lands, included in the draft Star Lake-Bisti Regional Coal Environmental Statement. All affected wilderness inventory units are located within New Mexico's Albuquerque District. Inventory units recommended as not qualifying for further inventory and should, therefore, be dropped from the wilderness review process are NM-010-5, NM-010-6, NM-010-58, all public lands affected by both the proposed Star Lake Railroad and the Fruit Land Coal Load Transmission Line which are not contained within the boundaries of an identified wilderness inventory unit, southwestern corner of NM-010-9 and NM-010-57 excluding approximately 1800 acres commonly referred to as the Bisti Badlands. Inventory units recommended for intensive wilderness inventory are that portion of NM-010-57 commonly referred to as the Bisti Badlands, NM-010-4 and NM-010-9 excluding the southwestern corner. Copies of the situation evaluation for each of the inventory units and detailed maps showing their location are available on request from the Albuquerque District Office Bureau of Land Management.

DATES: Comments by April 9, 1979. A public meeting will be held March 14, 1979, 1:00-3:00 p.m. and 7:00-9:00 p.m. in the Cavalier Ballroom, Four Seasons Motor Lodge, 2550 Carlisle Avenue, N.E., Albuquerque, New Mexico to receive public comment on the initial inventory recommendations.

ADDRESS: Send comments or requests to: District Manager, Bureau of Land Management, P.O. Box 677, 3550 Pan American Freeway, N.E., Albuquerque, New Mexico 87107.

FOR FURTHER INFORMATION CONTACT:

Randy Botkin at the above Albuquerque, New Mexico address or call 505-766-2455.

LARRY L. WOODARD,
*Acting State Director.*

[FR Doc. 79-1724 Filed 1-17-79; 8:45 am]

---

[4310-84-M]

### PHOENIX DISTRICT, KINGMAN RESOURCE AREA GRAZING ADVISORY BOARD

### Meeting

Notice is hereby given in accordance with Public Law 92-463 that a meeting of the Kingman Resource Area (Phoenix District) Grazing Advisory Board will be held on March 6, 1979.

The meeting will begin at 9:00 a.m. in the conference room of the Bureau of Land Management Office, 2475 Beverly Avenue, Kingman, Arizona 86401.

The agenda for the meeting will include:

(1) Election of Officers.
(2) A discussion of the duties and functions of the Board.
(3) The Range Improvement Program for Fiscal Year 1979.
(4) Policy on Maintenance of Range Improvements.
(5) County Contributed Range Improvement Funds.
(6) Cerbat/Black Mountain Livestock Grazing Program Decision Document.
(7) Arrangements for Future Meetings—number per year, timing, and agenda items.

The meeting is open to the public. Anyone wishing to make oral or written statements to the Board is request-

ed to do so through the office of the District Manager, 2929 West Clarendon Avenue, Phoenix, Arizona 85017 at least seven days prior to the meeting date.

Summary minutes of the Board meeting will be maintained in the District Office and be made available for public inspection and reproduction (during regular business hours) within 30 days following the meeting.

Dated: January 10, 1979.

W. K. BARKER,
*District Manager.*

[FR Doc. 79-1748 Filed 1-17-79; 8:45 am]

---

[4310-84-M]

## PHOENIX DISTRICT PHOENIX/LOWER GILA RESOURCE AREAS GRAZING ADVISORY BOARD

### Meeting

Notice is hereby given in accordance with Pub. L. 92-463 that a meeting of the Phoenix Lower Gila Resource Areas (Phoenix District) Grazing Advisory Board will be held on March 8, 1979.

The meeting will begin at 9:00 a.m. in the conference room of the Bureau of Land Management Office, 2929 West Clarendon Avenue, Phoenix, Arizona 85017.

The agenda for the meeting will include:

(1) Election of Officers.
(2) A discussion of the duties and functions of the Board.
(3) The Range Improvement Program for Fiscal Year 1979.
(4) Policy on Maintenance of Range Improvements.
(5) County Contributed Range Improvement Funds.
(6) Cerbat/Black Mountain Livestock Grazing Program Decision Document.
(7) Arrangements for Future Meetings—number per year, timing, and agenda items.

The meeting is open to the public. Anyone wishing to make oral or written statements to the board is requested to do so through the office of the District Manager at the above named address at least 7 days prior to the meeting date.

Summary minutes of the board meeting will be maintained in the District Office and be made available for public inspection and reproduction (during regular business hours) within 30 days following the meeting.

Dated: January 9, 1979.

W. K. BARKER,
*District Manager.*

[FR Doc. 79-1747 Filed 1-17-79; 8:45 am]

[4310-84-M]

## MOTORIZED VEHICLES ON PUBLIC LANDS CLOSURE TO USE

In continuation of the previous closure, notice is hereby given that use of motorized vehicles on certain public lands in the area between Shan Creek and Griffin Park in Josephine County, Oregon, is prohibited in accordance with the provisions of 43 CFR 6010.4.

This closure does not apply to emergency, law enforcement, and Federal or other government vehicles while being used for official or emergency purposes, or vehicles authorized by permit or contract.

The area affected by this closure lies approximately eight air miles west of Grants Pass. The legal description of the closed land is:

Township 36 South, Range 7 West, Willamette Meridian, Section 11, Government Lots 5, 6, 7, 8
Total Acres: 113

The closure is effective immediately and will remain in effect until further notice. Violation of this closure is punishable by a maximum of $1,000.00 fine and/or 12 months in jail. The closure is necessary to protect the natural environment of the Rogue National Wild and Scenic River.

This closure is effective immediately and will remain in effect until December 31, 1979. Maps showing the area described above are available for examination at the BLM Medford District Office, 310 W. Sixth Street, Medford, Oregon, 97501. For further information, contact Charles Grymes at 779-2351, ext. 341.

This land remains open for non-motorized recreational use, including fishing and horseback riding. It is closed to motorized vehicles, camping, and fires.

JERRY E. ASHER,
*Bureau of Land Management,*
*Acting District Manager.*

JANUARY 8, 1979.

[FR Doc. 79-1749 Filed 1-17-79; 8:45 am]

---

[4310-84-M]

[Group 597]

## ARIZONA

### Filing of Plats of Survey; Filing Date Suspended

JANUARY 8, 1979.

FEDERAL REGISTER Doc. 78-30213 appearing on page 50047 of the issue for October 26, 1978 prescribed that plats of dependent resurvey of a portion of the former boundary of Fort Mohave Indian Reservation, portions of subdivisional lines, and a portion of the former left bank of the Colorado River, T. 18 N., R. 22 W., Gila and Salt River Meridian, Arizona would be officially filed in the Arizona State Office, Bureau of Land Management, Phoenix, Arizona, effective 10:00 a.m. on December 5, 1978.

The official filing is herewith suspended.

ROBERT L. PETERSON,
*Chief, Branch of Records and Data Management.*

[FR Doc. 79-1776 Filed 1-17-79; 8:45 am]

---

[4310-84-M]

## DECKER-BIRNEY, SOUTH ROSEBUD AND COALWOOD MANAGEMENT FRAMEWORK PLANS

### Intent

JANUARY 11, 1979.

This notice is to advise you that the Miles City, Montana District Office, Bureau of Land Management, is proceeding to review and supplement portions of the Decker-Birney, South Rosebud and Coalwood Management Framework Plans (MFPs) to make certain that those portions of the MFPs reflect, as completely as possible, existing statutory requirements and policies and to begin to carry out the requirements of the Federal Lands Review mandated by Section (522)(c) of the Surface Mining Control and Reclamation Act (SMCRA).

Background standards and procedures for this MFP review and supplement preparation are contained in FEDERAL REGISTER Notice 43 FR 57662-57670 of December 8, 1978. The standards for this review are also discussed in a draft environmental statement, describing the Secretary of Interior's preferred coal program and alternatives, which was released for review on December 15, 1978 (43 FR 58776-58778).

Comments on revisions in the unsuitability criteria through the environmental statement process as well as through participation in the MFP review process are welcome.

For further information on the areas being reviewed, please contact: District Manager, Bureau of Land Management, West of Miles City, P.O. Box 940, Miles City, Montana 59301, (406) 232-4331.

EDWIN ZAIDLICZ,
*State Director.*

[FR Doc. 79-1802 Filed 1-17-79; 8:45 am]

---

[4310-84-M]

## NEVADA

### Airport Lease Application

Notice is hereby given that pursuant to the Act of May 24, 1928 (49 U.S.C. 211-214), Alfred Gerstler has applied

for an airport lease for the following land:

MOUNT DIABLO MERIDIAN

T. 21 S., R. 53 E.,
Sec. 3, Lots 2, 3, 4, SW¼NE¼, S½NW¼, N½SW¼, SE¼SW¼, NW¼SE¼;
Sec. 4, Lots 1, 2, 3, S½NE¼, SE¼NW¼, NE¼SW¼, N½SE¼;
Sec. 10, W½NE¼, E½NW¼.

The area described comprises 920 acres in Clark County, Nevada. The application was filed on September 15, 1976, and on that date the land was segregated from all forms of appropriation under the public land laws.

Interested persons may submit comments to the Chief, Branch of Lands and Minerals Operations, Bureau of Land Management, 300 Booth Street, Federal Building—Room 3008, Reno, Nevada 89509.

ROGER A. JARRELL,
*Acting Chief,*
*Division of Technical Services.*

[FR Doc. 79-1777 Filed 1-17-79; 8:45 am]

---

[4310-84-M]

[NM 35784]

NEW MEXICO

Application

JANUARY 10, 1979.

Notice is hereby given that, pursuant to section 28 of the Mineral Leasing Act of 1920 (30 U.S.C. 185), as amended by the Act of November 16, 1973 (87 Stat. 576), Transwestern Pipeline Company has applied for one 4-inch natural gas pipeline right-of-way across the following land:

NEW MEXICO PRINCIPAL MERIDIAN, NEW MEXICO

T. 19 S., R. 25 E.,
Sec. 7, E½NW¼;
Sec. 8, N½N½.

This pipeline will convey natural gas across 1.181 miles of public land in Eddy County, New Mexico.

The purpose of this notice is to inform the public that the Bureau will be proceeding with consideration of whether the application should be approved, and if so, under what terms and conditions.

Interested persons desiring to express their views should promptly send their name and address to the District Manager, Bureau of Land Management, P.O. Box 1397, Roswell, New Mexico 88201.

FRED E. PADILLA,
*Chief, Branch of Lands*
*and Minerals Operations.*

[FR Doc. 79-1781 Filed 1-17-79; 8:45 am]

---

[4310-84-M]

[NM 35785]

NEW MEXICO

Application

JANUARY 9, 1979.

Notice is hereby given that, pursuant to section 28 of the Mineral Leasing Act of 1920 (30 U.S.C. 185), as amended by the Act of November 16, 1973 (87 Stat. 576), Natural Gas Pipeline Company of America has applied for one 4-inch natural gas pipeline right-of-way across the following land:

NEW MEXICO PRINCIPAL MERIDIAN, NEW MEXICO

T. 19 S., R. 34 E.,
Sec. 6, SE¼SW¼ and S½SE¼;
Sec. 7, NE¼NE¼;
Sec. 8, N½N½;
Sec. 9, S½NE¼, W½NW¼ and SE¼NW¼.

This pipeline will convey natural gas across 2.735 miles of public land in Lea County, New Mexico.

The purpose of this notice is to inform the public that the Bureau will be proceeding with consideration of whether the application should be approved, and if so, under what terms and conditions.

Interested persons desiring to express their views should promptly send their name and address to the District Manager, Bureau of Land Management, P.O. Box 1397, Roswell, New Mexico 88201

FRED E. PADILLA,
*Chief, Branch of Lands*
*and Minerals Operations.*

[FR Doc. 79-1780 Filed 1-17-79; 8:45 am]

---

[4310-84-M]

[NM 35716]

NEW MEXICO

Application

JANUARY 10, 1979.

Notice is hereby given that, pursuant to section 28 of the Mineral Leasing Act of 1920 (30 U.S.C. 185), as amended by the Act of November 16, 1973 (87 Stat. 576), Northwest Pipeline Corporation has applied for one 4½-inch natural gas pipeline right-of-way across the following land:

NEW MEXICO PRINCIPAL MERIDIAN, NEW MEXICO

T. 32 N., R. 13 W.,
Sec. 30, lot 9.

This pipeline will convey natural gas across 0.065 of a mile of public land in San Juan County, New Mexico.

The purpose of this notice is to inform the public that the Bureau will be proceeding with consideration of whether the application should be approved, and if so, under what terms and conditions.

Interested persons desiring to express their views should promptly send their name and address to the District Manager, Bureau of Land Management, P.O. Box 6770, Albuquerque, New Mexico 87107.

FRED E. PADILLA,
*Chief, Branch of Lands,*
*and Minerals Operations.*

[FR Doc. 79-1779 Filed 1-17-79; 8:45 am]

---

[4310-84-M]

[NM 35698]

NEW MEXICO

Application

JANUARY 10, 1979.

Notice is hereby given that, pursuant to Section 28 of the Mineral Leasing Act of 1920 (30 U.S.C. 185), as amended by the Act of November 16, 1973 (87 Stat. 576), El Paso Natural Gas Company has applied for one 4½-inch natural gas pipeline and related facilities right-of-way across the following land:

NEW MEXICO PRINCIPAL MERIDIAN, NEW MEXICO

T. 10 S., R. 29 E.,
Sec. 23, SW¼SE¼.

This pipeline will convey natural gas across 0.154 of a mile of public land in Chaves County, New Mexico.

The purpose of this notice is to inform the public that the Bureau will be proceeding with consideration of whether the application should be approved, and if so, under what terms and conditions.

Interested persons desiring to express their views should promptly send their name and address to the District Manager, Bureau of Land Management, P.O. Box 1397, Roswell, New Mexico 88201.

FRED E. PADILLA,
*Chief, Branch of Lands*
*and Minerals Operations.*

[FR Doc. 79-1778 Filed 1-17-79; 8:45 am]

---

[4310-84-M]

[NM 35700, 35701, 356711, 35712]

NEW MEXICO

Applications

JANUARY 11, 1979.

Notice is hereby given that, pursuant to Section 28 of the Mineral Leasing Act of 1920 (30 U.S.C. 185), as amended by the Act of November 16, 1973 (87 Stat. 576), El Paso Natural Gas Company has applied for four 4½-inch natural gas pipeline rights-of-way across the following lands:

NEW MEXICO PRINCIPAL MERIDIAN, NEW MEXICO

T. 26 N., R. 7 W.,
Sec. 4, lot 2 and SW¼NE¼.
T. 30 N., R. 7 W.,
Sec. 35, E½NW¼ and SW¼NW¼.
T. 30 N., R. 10 W.,
Sec. 6, lot 22;
Sec. 7, lot 6.
T. 32 N., R. 10 W.,
Sec. 26, lot 6.

These pipelines will convey natural gas across 0.863 of a mile of public lands in Rio Arriba and San Juan Counties, New Mexico.

The purpose of this notice is to inform the public that the Bureau will be proceeding with consideration of whether the applications should be approved, and if so, under what terms and conditions.

Interested persons desiring to express their views should promptly send their name and address to the District Manager, Bureau of Land Management, P.O. Box 6770, Albuquerque, New Mexico 87107.

FRED E. PADILLA,
*Chief, Branch of Lands and Minerals Operations.*

[FR Doc. 79-1803 Filed 1-17-79; 8:45 am]

---

[4310-84-M]

[NM 35786, 35787 and 35789]

NEW MEXICO

Notice of Applications

JANUARY 12, 1979.

Notice is hereby given that, pursuant to Section 28 of the Mineral Leasing Act of 1920 (30 U.S.C. 185), as amended by the Act of November 16, 1973 (87 Stat. 576), El Paso Natural Gas Company has applied for three 4½-inch natural gas pipeline rights-of-way across the following lands:

NEW MEXICO PRINCIPAL MERIDIAN, NEW MEXICO

T. 27 N., R. 6 W.,
Sec. 27, W½NW¼;
Sec. 28, NE¼NE¼.
T. 30 N., R. 6 W.,
Sec. 31, N½SE¼
T. 32 N., R. 12 W.,
Sec. 23, NW¼NE¼, SE¼NE¼ and NE¼SE¼.

These pipelines will convey natural gas across 1.069 miles of public lands in Rio Arriba and San Juan Counties, New Mexico.

The purpose of this notice is to inform the public that the Bureau will be proceeding with consideration of whether the applications should be approved, and if so, under what terms and conditions.

Interested persons desiring to express their views should promptly send their name and address to the District Manager, Bureau of Land Management, P.O. Box 6770, Albuquerque, New Mexico 87107.

FRED E. PADILLA,
*Chief, Branch of Lands and Minerals Operations.*

[FR Doc. 79-1804 Filed 1-17-79; 8:45 am]

---

[4310-84-M]

[NM 35790 and 35831]

NEW MEXICO

Applications

JANUARY 11, 1979.

Notice is hereby given that, pursuant to Section 28 of the Mineral Leasing Act of 1920 (30 U.S.C. 185), as amended by the Act of November 16, 1973 (87 Stat. 576), El Paso Natural Gas Company has applied for four 4½-inch natural gas pipeline rights-of-way across the following lands:

NEW MEXICO PRINCIPAL MERIDIAN, NEW MEXICO

T. 25 S., R. 26 E.,
Sec. 1, S½NW¼ and NW¼SW¼.
T. 19 S., R. 34 E.,
Sec. 15, NW¼SW¼.

These pipelines will convey natural gas across 0.689 of a mile of public lands in Eddy and Lea Counties, New Mexico.

The purpose of this notice is to inform the public that the Bureau will be proceeding with consideration of whether the applications should be approved, and if so, under what terms and conditions.

Interested persons desiring to express their views should promptly send their name and address to the District Manager, Bureau of Land Management, P.O. Box 1397, Roswell, New Mexico 88201.

FRED E. PADILLA,
*Chief, Branch of Lands, and Minerals Operations.*

[FR Doc. 79-1805 Filed 1-17-79; 8:45 am]

---

[4310-84-M]

[Oregon 016753; 2330 (943.4)]

OREGON

Opportunity for Public Hearing and Republication of Notice of Proposed Withdrawal

JANUARY 8, 1979.

The Corps of Engineers, U.S. Department of the Army, on August 30, 1965, filed application Serial No. Oregon 016753 for withdrawal of 3,970.80 acres of lands. A notice of the proposed withdrawal was published in the FEDERAL REGISTER on September 17, 1965, Vol. 30, page 11926, F.R. Doc. 65-9866. On September 21, 1972, the application was amended to delete 3,130.80 acres, and a notice of termination was published on October 6, 1972, Vol. 37, pages 21193 and 21194, F.R. Doc. 72—17125. The lands remaining in the application are described as:

WILLAMETTE MERIDIAN

REVESTED OREGON AND CALIFORNIA RAILROAD GRANT LANDS

T. 32 S., R. 1 E.,
Sec. 33, NE¼NE¼NW¼, S½NE¼NW¼, and SE¼NW¼.
T. 33 S., R. 1 E.,
Sec. 5, NE¼SW¼SE¼ and S½SW¼SE¼;
Sec. 9, W½NE¼NW¼;
Sec. 17, Lots 5 and 6 (Formerly N½SW¼);
Sec. 19, E½W½NE¼, NE¼SE¼, E½NW¼SE¼, S½SW¼NW¼SE¼, and SW¼SE¼;
Sec. 29, NW¼, N½SW¼, and SW¼SW¼.

PUBLIC DOMAIN LAND

T. 33 S., R. 1 E.,
Sec. 30, E½E½ and NW¼NE¼.

The areas described aggregate 840.59 acres in Jackson County, Oregon.

The applicant desires that the lands be reserved for the Elk Creek Reservoir Project.

Pursuant to section 204(h) of the Federal Land Policy and Management Act of 1976, 90 Stat. 2754, notice is hereby given that an opportunity for a public hearing is afforded in connection with the pending withdrawal application. All interested persons who desire to be heard on the proposed withdrawal must file a written request for a hearing with the State Director, Bureau of Land Management, at the address shown below, on or before February 20, 1979. Notice of the public hearing will be published in the FEDERAL REGISTER, giving the time and place of such hearing. The hearing will be scheduled and conducted in accordance with BLM Manual Sec. 2361.16 B. All previous comments submitted in connection with the withdrawal application have been included in the record and will be considered in making a final determination on the application.

In lieu of or in addition to attendance at a scheduled public hearing, written comments or objections to the pending withdrawal application may be filed with the undersigned authorized officer of the Bureau of Land Management on or before February 20, 1979.

The above described lands are temporarily segregated from the operation of the public land laws, including the mining laws, to the extent that the withdrawal applied for, if and when effected, would prevent any form of disposal or appropriation under such laws. Current administrative jurisdiction over the segregated lands will not be affected by the temporary segregation. In accordance with section 204(g) of the Federal Land Policy and Management Act of 1976 the segregative effect of the pending withdrawal ap-

plication will terminate on October 20, 1991, unless sooner terminated by action of the Secretary of the Interior.

All communications (except public hearing requests) in connection with this pending withdrawal application should be addressed to the undersigned officer, Bureau of Land Management, Department of the Interior, P.O. Box 2965, Portland, Oregon 97208.

HAROLD A. BERENDS,
*Chief, Branch of Lands and Minerals Operations.*

[FR Doc. 79-1782 Filed 1-17-79; 8:45 am]

---

[4310-70-M]

National Park Service

[INT DES 79-4]

## PROPOSED FERAL BURRO MANAGEMENT AND ECOSYSTEM RESTORATION PLAN, GRAND CANYON NATIONAL PARK, ARIZ.

### Availability of Draft Environmental Statement

Pursuant to section 102(2)(c) of the National Environmental Policy Act, the Department of the Interior has prepared a draft environmental statement for the proposed Feral Burro Management and Ecosystem Restoration Plan, Grand Canyon National Park, Arizona.

The statement considers a management plan to restore natural ecosystems in four impacted areas of the park. The plan proposes to remove approximately 300 feral burros, primarily by shooting and secondarily by herding, and to fence a 2.5-mile section of the park boundary to prevent re-entry of burros from adjacent Federal land.

Written comments on the environmental statement are invited and will be accepted on or before March 19, 1979. Comments should be addressed to the Superintendent, Grand Canyon National Park.

Copies of the draft environmental statement are available from or for inspection at the following locations:

Western Regional Office, National Park Service, 450 Golden Gate Avenue, San Francisco, CA 94102.

Southern Arizona Group, National Park Service, 1115 N. 1st Street, Phoenix, AZ 85004.

Grand Canyon National Park, P.O. Box 129, Grand Canyon, AZ 86023.

Dated: January 15, 1979.

LARRY R. MEIEROTTO,
*Deputy Assistant Secretary of the Interior.*

[FR Doc.79-1785 Filed 1-17-79; 8:45 am]

[7020-02-M]

# INTERNATIONAL TRADE COMMISSION

[Investigation No. 337-TA-53]

## CERTAIN SWIVEL HOOKS AND MOUNTING BRACKETS

### Commission Request for Public Comments Concerning Settlement Agreement

RECOMMENDATION OF "NO PRESENT VIOLATION" ISSUED

In connection with the Commission's investigation, under section 337 of the Tariff Act of 1930, of alleged unfair methods of competition and unfair acts in the importation and sale of certain swivel hooks and mounting brackets in the United States, the presiding officer recommended on December 1, 1978, that the Commission determine that there is no present violation of section 337. The presiding officer certified the record to the Commission for its consideration. Copies of the presiding officer's recommendation may be obtained by interested persons by contacting the Office of the Secretary to the Commission, 701 E Street, N.W., Washington, D.C. 20436, telephone (202) 523-0161.

SETTLEMENT AGREEMENT SIGNED BY COMPLAINANT AND ALL RESPONDENTS

The Presiding Officer's recommendation of "no present violation" follows a joint motion by all parties to terminate this investigation, which was supported by a settlement agreement signed by complainant and all respondents ("Settlement Agreement"). The presiding officer found that, while the importation or sale of the swivel hooks and mounting brackets which are the subject of the Commission's investigation may have violated section 337 in the past by infringing U.S. Letters Patent No. 3,995,822 or U.S. Letters Patent No. 4,049,225, in light of the Settlement Agreement these alleged violations will not occur in the future. In addition, the presiding officer found that, while the importation of swivel hooks which are the subject of the Commission's investigation and their subsequent sale to retail purchasers without a clear and conspicuous disclosure of the foreign country of origin may have violated section 337 in the past, in light of the Settlement Agreement these alleged violations will not occur in the future.

WRITTEN COMMENTS ON THE PUBLIC INTEREST REQUESTED

Since all parties have filed a joint motion to terminate this investigation, which is supported by the Settlement Agreement, and since the presiding officer has recommended termination on the basis of the Settlement Agreement, no oral argument will be held with respect to the Presiding Officer's recommendation. However, in light of the Commission's duty to consider the public interest, the Commission requests written comments from the parties, interested agencies, public-interest groups, or other interested persons concerning the effect of the termination of this investigation, supported by the Settlement Agreement, upon (1) the public health and welfare, (2) competitive conditions in the U.S. economy, (3) the production of like or directly competitive articles in the United States, and (4) U.S. consumers. These written comments must be filed with the Secretary to the Commission on or before February 20, 1979. The test of the settlement agreement follows.

TEXT OF THE SETTLEMENT AGREEMENT

This agreement, by and between Coats & Clark, Inc. (hereinafter referred to as "Complainant") and Sato Metal Trading Co., Ltd., Sato American Metal, Inc., Japan Hardcraft (U.S.A.) Corporation, Jordan Industries, Inc., and Carol Cable Company (hereinafter referred to as "Respondents");

Whereas, Complainant has filed a complaint under Section 337 of the Tariff Act of 1930, as amended (19 U.S.C. 1337) with the United States International Trade Commission on May 9, 1978;

Whereas, an investigation was instituted by the International Trade Commission on June 7, 1978 based on said Complaint;

Whereas, Answers to said Complaint were timely filed by Respondents;

Whereas, Complainant and Respondents have agreed to settle their differences underlying said investigation;

Now, therefore, be it known, that in consideration of the mutual covenants contained herein, the parties hereto agree to be bound as follows:

1. Respondents have re-designed their "Swivel hooks" so as not to infringe U.S. Patent No. 3,995,822.

2. Respondents shall not import or sell "Swivel Hooks" infringing U.S. Patent No. 3,995,822.

3. U.S. Patent No. 3,995,822 is valid.

4. Based on the affidavits of Robert C. Faber, Melba Holbrook, and James Ban attached to the MOTION TO DISMISS ALL ALLEGATIONS IN COATS & CLARK'S COMPLAINT PERTAINING TO "HINGED MOUNTING BRACKETS" filed with the International Trade Commission on the 19th day of July, 1978, and of the Affidavits of Lawrence H. Koffler, James Ban and Earl Oda attached hereto as Exhibits, 1, 2, and 3, respectively, all of said Affidavits being embodied herein by reference, Respondents have not imported or sold any mounting brackets infringing U.S. Patent No. 4,049,225 except for a small number of samples which were imported but not sold.

5. Respondents will not import or sell mounting brackets infringing U.S. Patent No. 4,049,225.

6. U.S. Patent No. 4,049,225 is valid.

7. Respondents have imported and/or sold swivel hooks either lacking an indication of the country of origin or not prominently displaying an indication of the country of origin such that the consumer of said swivel

hooks may have been deceived as to the country or origin.

8. Respondents shall disclose clearly and conspicuously the foreign country of origin of all imported swivel hooks on the swivel hooks and on the retail packages in which these swivel hooks are sold in the United States.

9. Respondents, for themselves and for any customers for whom they adopt and use trademarks, shall not use "SWIVEL CEILING HOOK" and "SWIVEL HOOK/EYE" or colorable variations thereof on their swivel hooks and Respondent, Jordan Industries, Inc., shall submit its proposed new trademarks to Complainant for approval. Complainant shall not unreasonably withhold such approval. Said obligation of submission for approval shall not be a continuing one beyond the first change to new trademarks.

10. Respondents, for themselves and for any customers for whom they adopt and use trade dress, shall adopt trade dress for their swivel hooks that is not similar to that of Complainant and Respondent, Jordan Industries, Inc. shall submit its proposed new trade dress to Complainant for approval. Complainant shall not unreasonably withhold such approval. Said obligation for approval shall not be a continuing one beyond the first change to new trade dress.

1. Complainant shall release Respondents from all past claims of patent or trademark infringement, or unfair competition, in the United States, said release to be in a form substantially the same as that attached hereto as Exhibit 4.

12. The International Trade Commission has jurisdiction over the subject matter of said investigation.

13. Respondents will not challenge the validity of U.S. Patents Nos. 3,995,822 and 4,049,225 or of any trademark registrations which may issue to Complainant covering "SWIVEL CEILING HOOK" or "SWIVEL HOOK/EYE".

14. Complainant and Respondents shall enter into a JOINT MOTION FOR TERMINATION with the Commission investigative attorney.

15. Complainant shall assert no claim against Respondents' customers, nor against Respondents by reason of sale or other disposal of products physically present in the United States prior to the date of this settlement agreement, it being the intent of this Paragraph 15 to make clear that Respondents and Respondents' customers have the right to dispose of stock on hand within one year from the date of signing of this Agreement.

16. Complainant agrees that specimens of Respondents' revised trademarks and/or trade designation for the products herein referred to as "SWIVEL CEILING HOOK" and "SWIVEL HOOK/EYE" submitted to Complainant on or about September 15, 1978, satisfies the obligation of Respondents set out in paragraph 9 herein to submit said revisions to Complainant for approval, and Complainant hereby gives its approval thereto.

17. Complainant agrees that specimens of Respondents' revised trade dress for the products herein referred to as "SWIVEL CEILING HOOK" and "SWIVEL HOOK/EYE" submitted to Complainant on or about September 15, 1978, satisfies the obligations of Respondents set out in paragraph 10 herein to submit said revisions to Complainant for approval, and Complainant hereby gives its approval thereto.

In witness whereof, the parties hereto have executed this agreement by their duly authorized attorneys as of this 20th day of September, 1978.

COMPLAINANT: COATS & CLARK, INC., By: Milton J. Wayne, *Attorney for Complainant.*

RESPONDENTS: SATO METAL TRADING CO., LTD.; SATO AMERICAN METAL, INC.; JAPAN HARDCRAFT (U.S.A.) CORP.; CAROL CABLE COMPANY, By: Robert C. Faber, *Their Attorney;* JORDAN INDUSTRIES, INC., By: Robert C. Faber; By: James G. Staples, *Its Attorneys.*

ADDITIONAL INFORMATION

The original and 19 true copies of all written submissions must be filed with the Secretary to the Commission. Any person desiring to submit a document (or a portion thereof) to the Commission in confidence must request *in camera* treatment. Such request should be directed to the Chairman of the Commission and must include a full statement of the reasons why the Commission should grant such treatment. The Commission will either accept such submission in confidence or return it. All nonconfidential written submissions will be open to public inspection at the Secretary's Office.

Notice of the Commission's investigation was published in the FEDERAL REGISTER of June 14, 1978 (43 FR 25743).

By order of the Commission.

Issued: January 15, 1979.

KENNETH R. MASON,
*Secretary.*

[FR Doc. 79-1881 Filed 1-17-79; 8:45 am]

---

[7020-02-M]

[Investigation No. 337-TA-48]

## ALTERNATING PRESSURE PADS

### Commission Procedure for Solicitation of Public Comment

On September 7, 1978, the presiding officer in investigation No. 337-TA-48 (Alternating Pressure Pads), an investigation being conducted by the United States International Trade Commission under the authority of section 337 of the Tariff Act of 1930 (19 U.S.C. 1337), issued his recommended determination that the Commission (1) determine that there is no present violation of section 337 in the importation or sale of alternating pressure pads, and (2) terminate the investigation as to all issues and parties, contingent upon complainants filing a copy of their reissue application with proof of filing with the Patent and Trademark Office with the Commission.

Copies of the presiding officer's recommended determination may be obtained by contacting the Office of the Secretary to the Commission, 701 E Street, NW., Washington, D.C. 20436, telephone 202-523-0161.

The Commission, before proceeding on the recommended determination, has determined that it will consider any written submission relating to the public interest for a period of 20 days following publication of this notice in the FEDERAL REGISTER. this notice outlines the procedures for submissions to the Commission relating to its consideration of the public interest.

PROCEDURAL BACKGROUND

This investigation was instituted on February 17, 1978, on the basis of a complaint filed by Gaymar Industries, Inc., and Medisearch PR, Inc. (complainants). Named as respondents in the Commission's notice of investigation were Flowtron Aire, Ltd., and the Huntleigh Group, Inc. (respondents). The notice of investigation listed the unfair practice allegedly engaged in by respondents as (1) the importation of alternating pressure pads which were allegedly covered by claims 1 and 3-6 of U.S. Letters Patent 3,701,173 and (2) the alleged unfair use of promotional and advertising material pertaining to alternating pressure pads (43 FR 7483, Feb. 23, 1978).

On August 7, 1978, complainants filed, pursuant to section 210.51 of the Commission's Rules of Practice and Procedure (19 CFR 210.51), a motion to terminate this investigation as to all issues and with respect to all respondents.

The motion to terminate is based on the discovery by respondents of a prior West German patent reference, which was previously unknown to the parties. Complainants stated that this prior art was not before the patent examiner while the above patent was pending, and that the discovery of the West German patent reference places in question the validity of one or more of the claims in the patent. Complainants also stated in the motion that respondents have withdrawn the promotional literature from circulation and that prior activities connected therewith were de minimis. Complaniants then withdrew their request for an exclusion order based on the alleged infringement and on the alleged unfair use of promotional literature. Complainants indicated an intention to surrender the patent and to file a reissue application with the Patent and Trademark Office, which they subsequently did. On August 18, 1978, complainants filed a supplemental memorandum (which is attached to this notice) containing a settlement agreement whereby complainants agreed not to assert the patent claims against

respondents or those in privity with respondents (settlement agreement).

The presiding officer, acting in conformity with sections 210.51(c) and 210.53 of the Rules (19 CFR 210.51(c) and 210.53), concluded that (1) the issue of the promotional literature published by respondents is now moot owing to respondents' discontinuing distribution of such literature, and (2) because complainants have voluntarily moved to terminate the investigation and have entered into an agreement with respondents not to assert the patent claims against them, there is no present violation of section 337. The presiding officer also found that the discovery of the West German patent removes the statutory presumption of validity of the 3,701,173 patent under 35 U.S.C. 282. The presiding officer recommended that the Commission (1) determine that there is no present violation of section 337 in the importation or sale of alternating pressure pads, and (2) terminate the investigation as to all issues and parties, contingent upon complainants' filing with the Commission a copy of their reissue application with proof of filing with the Patent and Trademark Office. The copy of the reissue application with proof of filing has been properly filed with the Commission.

Under section 337, the Commission is required to consult with and seek advice and information from the Department of Health, Education, and Welfare, the Department of Justice, the Federal Trade Commission, and departments and agencies as it considers appropriate (19 U.S.C. 1337(b)). In addition, after considering the effect of a determination with respect to the concerned articles on the public health and welfare, competitive conditions in the U.S. economy, the production of like or directly competitive articles in the United States, and U.S. consumers, the Commission may find that the articles which are the subject of its investigation should not be excluded from entry (19 U.S.C. 1337(d)).

The Commission particularly desires to obtain public comment on possible anticompetitive effects arising from this agreement and any adverse effect on the public interest. Under the agreement, third parties may be sued by complainants, and complainants are not precluded from filing a section 337 investigation against other importers which allegedly infringe this patent. A copy of the settlement agreement entered into between the parties follows this notice.

### Disposition of the Motion

The Commission will, on the basis of the record, the recommended determination, and the public-interest comments received, (1) grant the motion and terminate the investigation, (2) suspend the investigation, (3) advise the parties of alterations in the agreement that would be acceptable to the Commission so that it will not be in opposition to the public interest, (4) remand the matter to the presiding officer for further consideration, (5) determine that there is no violation in this case, or (6) take other appropriate action, as may be necessary.

The granting of complainants' motion would terminate the present investigation. The agreement would be binding only on the signatories, and there would be no judgment as to the validity of the patent, at least for the purposes of section 337.

Suspension of the investigation would allow the Commission to reopen the investigation on motion by the parties or on its own motion, should further information indicate that this would be in the public interest.

The alternatives of remanding the agreement for further consideration by the parties or by the presiding officer would allow a further consideration of any anti-competitive aspects of the agreement.

### Procedure for Consideration of the Public Interest

*Requests for oral argument and oral presentation.* At present, no oral argument is planned with respect to the public-interest factors raised by the recommended determination of the presiding officer. However, the Commission will consider requests for an oral argument or an oral presentation if they are received by the Secretary to the Commission on or before February 20, 1979.

*Written submissions on the recommended determination.* Written submissions from the parties, other interested persons, government agencies and departments, governments, or the public with respect to the public interest will be considered by the Commission if received on or before February 20, 1979.

Statements made in submissions should be supported by reference to the record. Persons with the same position are encouraged to consolidate their submissions, if possible.

*Additional information.* The original and 19 true copies of all written submissions must be filed with the Secretary to the Commission. Any person desiring to submit a document (or a portion thereof) to the Commission in confidence, must request *in camera* treatment. Such request should be directed to the Chairman of the Commission and must include a full statement of the reasons the Commission should grant such treatment. The Commission will either accept such submission in confidence or return the submission. All nonconfidential written submissions will be open to public inspection at the Secretary's Office.

Issued: January 15, 1979.

By order of the Commission.

Kenneth R. Mason,
*Secretary.*

Amster, Rothstein & Engelberg,
Counselors At Law,
*New York, N.Y., August 7, 1978.*

Re: *The Huntleigh Group, Inc. et al* v. *Gaymar Industries, Inc., et al*, Civil Action No. 77 Civ. 4154 (MEL).

Sidney R. Bresnick, Esq.,
*Pennie & Edmonds,*
*330 Madison Avenue,*
*New York, N.Y. 10017.*

Dear Sir: This letter is to advise you that our client Medisearch PR Inc. (and persons and entities in privity with it, such as Gaymar Industries, Inc. and John Whitney) covenant that it will not assert against your clients Flowtron Aire Ltd., The Huntleigh Group, Inc. and The Huntleigh Group Ltd. (and those in privity with them) claims 1, 3, 4, 5 and 6 of United States Patent No. 3,701,173, whether in the original patent or a reissue of that patent.

The above statement is not to be taken as prejudicial to any possible claims which might arise in the future based upon alleged infringement of any new and narrower claims in a reissue of that patent.

Medisearch (and those in privity with it) hereby release your clients from all claims existing up to this date as alleged in the counterclaims in the above-identified litigation.

Although you may take this letter as binding upon my clients, I am having a copy of this letter countersigned by an officer of the owner of the patent, Medisearch PR Inc. and I will forward such countersigned copy to you in the near future.

Very truly yours,

Jesse Rothstein.

Medisearch PR Inc. acknowledges its agreement with the foregoing and confirms Mr. Rothstein's authorization to commit the company as stated above.

John Whitney, *President,*
*Medisearch PR Inc.*

Amster, Rothstein & Engelberg,
Counselors At Law,
*New York, N.Y., August 9, 1978.*

Re: *The Huntleigh Group, Inc. et al* v. *Gaymar Industries, Inc., et al*, Civil Action No. 77 Civ. 4154 (MEL), Alternating Pressure Pads Investigation No. 337-TA-48.

Sidney R. Bresnick, Esq.,
*Pennie & Edmonds,*
*330 Madison Avenue,*
*New York, N.Y. 10017.*

Dear Sir: This letter shall serve as the agreement between and among our respective clients concerning the termination of the above District Court case and ITC proceeding.

The ITC proceeding shall be terminated in accordance with Complainants' motion filed on August 2, 1978. Respondents shall file a document indicating that they have no opposition to the motion and request that it be granted.

The District Court case shall be dismissed under Rule 41(a) by stipulation; both the complaint and the counterclaims shall be

dismissed without prejudice. Our clients again acknowledge the covenants contained in my letter to you dated August 7, 1978.

The covenant contained in our letter to you of August 7, 1978, copy attached, contemplates the dismissal of the complaint and counterclaims in the District Court case without prejudice. This covenant shall take precedence over such dismissal without prejudice.

We further confirm that we will specifically notify your clients upon the filing of an application to reissue U.S. Patent No. 3,701,173.

This agreement, the letter of August 7, 1978, the ITC proceeding, the District Court case and the agreement by the parties to terminate those legal proceedings shall not be used for advertising, promotion or publicity purposes.

Please have a copy of this letter countersigned by persons authorized to sign on behalf of your clients; we will do the same on our side and we can then exchange signed copies.

Very truly yours,

JESSE ROTHSTEIN.

AGREED TO:

THE HUNTLEIGH GROUP, INC.

By:

FLOWTRON AIRE LIMITED

By:

THE HUNTLEIGH GROUP LIMITED

By:

GAYMAR INDUSTRIES, INC.

By: HOWARD R. GESSNER, JOHN K. WHITNEY.

MEDISEARCH PR INC.

By: JOHN K. WHITNEY, *President*

[FR Doc. 79-188 Filed 1-17-79; 8:45 a.m.]

---

[4410-02-M]

## DEPARTMENT OF JUSTICE

### Federal Bureau of Investigation

### NATIONAL CRIME INFORMATION CENTER ADVISORY POLICY BOARD

#### Renewal

In accordance with the Federal Advisory Committee Act (Pub. L. 92-463), notice is hereby given of the renewal of the NCIC Advisory Policy Board.

The Assistant Attorney General for Administration, United States Department of Justice, and the Committee Management Secretariat, Office of the Assistant to the Administrator, General Services Administration, have determined that renewal of this Board is necessary and in the public interest. Copies of documents relating to the work of the Board can be obtained at FBI Headquarters, Washington, D.C. 20535.

The purpose of the Board is to recommend to the FBI general policy with respect to the philosophy, concept and operational principles of the NCIC system.

Membership on this Board consists of 26 representatives of criminal justice agencies throughout the United States. Twenty members are elected; five each from the four NCIC geographic regions. Qualified electors are representatives of NCIC control terminal agencies. The FBI does not participate in the electoral process. Six additional members representing the judicial, prosecutorial, and correctional segments of the criminal justice community are appointed by the Director of the FBI.

The Chairman of the Board is elected by the Board members and will serve until January 4, 1981.

WILLIAM H. WEBSTER,
*Director.*

[FR Doc. 79-1727 Filed 1-17-79; 8:45 am]

---

[1505-01-M]

### LAW ENFORCEMENT ASSISTANCE ADMINISTRATION

### NATIONAL INSTITUTE OF LAW ENFORCEMENT AND CRIMINAL JUSTICE

#### Arson Research Grants; Solicitation

*Correction*

In FR Doc. 79-748, appearing on page 2028, in the issue of Tuesday, January 9, 1979 in the last column, the second paragraph in the last line, correct the figure "$25,000" to read "$250,000".

---

[4410-01-M]

### UNITED STATES CIRCUIT JUDGE NOMINATING COMMISSION

#### Meeting

United States Circuit Judge Nominating Commission Fourth Circuit Panel Chairman: Wesley M. Walker

The Panel for the Fourth Circuit of the United States Circuit Judge Nominating Commission will meet to interview applicants for Fourth Circuit vacancies in North Carolina and Maryland.

The first meeting will be held at the Federal Building, 401 West Trade Street, Charlotte, North Carolina on February 15, 16, and 17, 1979, at 9:30 a.m.

The second meeting will be held at the United States Court of Appeals, 101 West Lombard Street, Baltimore, Maryland, on February 26, 27, and 28, 1979, at 9:30 a.m.

These meetings will be closed to the public pursuant to Pub. L. 92-463, Section 10(D) as amended. (CF 5 U.S.C. 552b (c)(6).

JOSEPH A. SANCHES,
*Advisory Committee, Management Officer.*

JANUARY 10, 1979.

[FR Doc. 79-1750 Filed 1-17-79; 8:45 am]

---

[7537-01-M]

## NATIONAL FOUNDATION FOR THE ARTS AND THE HUMANITIES

### MUSIC ADVISORY PANEL (CONTEMPORARY ENSEMBLES)

#### Meeting

Pursuant to section 10 (a) (2) of the Federal Advisory Committee Act (Pub. L. 92-463), as amended, notice is hereby given that a meeting of the Contemporary Ensembles Section of the Music Advisory Panel to the National Council on the Arts, previously announced as a meeting of the Composer Librettist Section in the FEDERAL REGISTER, Vol. 43, No. 251, Fri., Dec. 29, 1978, page 61052, will be held on January 25, 26, 27 and 28, 1979, from 9:30 a.m. to 5:30 p.m. each day, in room 1422, Columbia Plaza Office Bldg., 2401 E Street, N.W., Washington D.C.

A portion of this meeting will be open to the public on January 26, 1979, from 1:30 p.m. to 5:30 p.m. for a discussion of guidelines.

The remaining sessions of this meeting on January 25, 1979, from 9:30 a.m. to 5:30 p.m., January 26, 1979, from 9:30 a.m. to 1:30 p.m., January 27, 1979, from 9:30 a.m. to 5:30 p.m., and January 28, 1979, from 9:30 a.m. to 5:30 p.m. are for the purpose of Panel review, discussion, evaluation, and recommendation on applications for financial assistance under the National Foundation on the Arts and the Humanities Act of 1965, as amended, including discussion of information given in confidence to the agency by grant applicants. In accordance with the determination of the Chairman published in the FEDERAL REGISTER March 17, 1977, these sessions will be closed to the public pursuant to subsections (c) (4), (6) and 9 (b) of section 552b of Title 5, United States Code.

Further information with reference to this meeting can be obtained from Mr. John H. Clark, Advisory Committee Management Officer, National Endowment for the Arts, Washington, D.C. 20506, or call (202) 634-6070.

JOHN H. CLARK,
*Director, Office of Council and Panel Operations, National Endowment for the Arts.*

JANUARY 10, 1979.

[FR Doc. 79-1751 Filed 1-17-79; 8:45 am]

[7590-01-M]

## NUCLEAR REGULATORY COMMISSION

[Docket No. 50-10]

### COMMONWEALTH EDISON CO.

#### Issuance of Amendent to Facility Operating License

The U.S. Nuclear Regulatory Commission (the Commission) has issued Amendment No. 28 to Facility Operating License No. DPR-2, issued to the Commonwealth Edison Company (the licensee), which revised the Technical Specifications for operation of Unit 1 of Dresden Nuclear Power Station (the facility) located in Grundy County, Illinois. The license amendment is effective as of its date of issuance.

The amendment revises the Technical Specifications to permit tensioning of the reactor vessel head bolting studs with the vessel shell temperature greater than 70°F.

The application for the amendment complies with the standards and requirements of the Atomic Energy Act of 1954, as amended (the Act), and the Commission's rules and regulations. The Commission has made appropriate findings as required by the Act and the Commission's rules and regulations in 10 CFR Chapter I, which are set forth in the license amendment. Prior public notice of this amendment was not required since the amendment does not involve a significant hazards consideration.

The Commission has determined that the issuance of this amendment will not result in any significant environmental impact and that pursuant to 10 CFR 51.5(d)(4) an environmental impact statement or negative declaration and environmental impact appraisal need not be prepared in connection with the issuance of this amendment.

For further details with respect to this action, see (1) the application for amendment dated December 1, 1978, (2) Amendment No. 28 to License No. DPR-2, and (3) the Commission's related Safety Evaluation. All of these items are available for public inspection at the Commission's Public Document Room, 1717 H Street, N.W., Washington, D.C. 20555 and at the Morris Public Library, 604 Liberty Street, Morris, Illinois 60451. A single copy of items (2) and (3) may be obtained upon request addressed to the U.S. Nuclear Regulatory Commission, Washington, D.C. 20555, Attention: Director, Division of Operating Reactors.

Dated at Bethesda, Maryland, this 4th day of January, 1979.

For the Nuclear Regulatory Commission.

THOMAS V. WAMBACH,
*Acting Chief, Operating Reactors Branch No. 2, Division of Operating Reactors.*

[FR Doc. 79-1789 Filed 1-17-79; 8:45 am]

---

[7590-01-M]

[Docket No. 50-302]

### FLORIDA POWER CORP., ET AL.

#### Notice of Issuance of Amendment to Facility Operating License

The U.S. Nuclear Regulatory Commission (the Commission) has issued Amendment No. 17 to Facility Operating License No. DPR-72, issued to the Florida Power Corporation, City of Alachua, City of Bushnell, City of Gainesville, City of Kissimmee, City of Leesburg, City of New Smyrna Beach and Utilities Commission, City of New Smyrna Beach, City of Ocala, Orlando Utilities Commission and City of Orlando, Sebring Utilities Commission, Seminole Electric Cooperative, Inc., and the City of Tallahassee (the licensees) which revised the Technical Specifications for operation for the Crystal River Unit No. 3 Nuclear Generating Plant (the facility) located in Citrus County, Florida. The amendment is effective as of the date of issuance.

This amendment revises the Technical Specifications to delete the requirement to maintain the sodium thiosulfate tank operable while it is also required to be isolated; add surveillance for emergency core cooling system valves; delete reference to two reactor coolant pump operation; change discharge temperature monitoring locations; and change the requirement for condenser vacuum pump exhaust flow rate monitoring from continuous to once per shift.

The applications for the amendment comply with the standards and requirements of the Atomic Energy Act of 1954, as amended (the Act), and the Commission's rules and regulations. The Commission has made appropriate findings as required by the Act and the Commission's rules and regulations in 10 CFR Chapter I, which are set forth in the license amendment. Prior public notice of this amendment was not required since the amendment does not involve a significant hazards consideration.

The Commission has determined that the issuance of this amendment will not result in any significant environmental impact and that pursuant to 10 CFR 51.5(d)(4) an environmental impact statement or negative declaration and environmental impact appraisal need not be prepared in connection with issuance of this amendment.

For further details with respect to this action, see (1) the applications for amendment dated July 15, October 11, and November 8, 1977, and February 17, 1978, (2) Amendment No. 17 to License No. DPR-72, and (3) the Commission's related Safety Evaluation. All of these items are available for public inspection at the Commission's Public Document Room, 1717 H Street, NW., Washington, D.C., and at the Crystal River Public Library, Crystal River, Florida. A copy of items (2) and (3) may be obtained upon request addressed to the U.S. Nuclear Regulatory Commission, Washington, D.C. 20555, Attention: Director, Division of Operating Reactors.

Dated at Bethesda, Maryland, this 4th day of January 1979.

For the Nuclear Regulatory Commission.

ROBERT W. REID,
*Chief, Operating Reactors Branch No. 4, Division of Operating Reactors.*

[FR Doc. 79-1790 Filed 1-17-79; 8:45 am]

---

[7590-01-M]

### HEALTH EFFECTS RESEARCH

#### Memorandum of Understanding

Pursuant to Pub. L. 95-601, the Nuclear Regulatory Commission and the Environmental Proection Agency have executed a Memorandum of Understanding delineating respective agency responsibilities in the conduct of epidemiological planning studies to investigate the health risks associated with low-level ionizing radiation. The text of the memorandum is set forth below.

Dated at Washington, D.C., this 12th day of January 1979.

For the Nuclear Regulatory Commission.

SAMUEL J. CHILK,
*Secretary of the Commission.*

NRC/EPA MEMORANDUM OF UNDERSTANDING CONCERNING EPIDEMIOLOGICAL RESEARCH ON THE HEALTH EFFECTS OF LOW-LEVEL IONIZING RADIATION

The Nuclear Regulatory Commission (NRC) and the Environmental Protection Agency (EPA) have complementary responsibilities in areas of environmental protection and the control of radiation health hazards. Pursuant to Reorganization Plan No. 3 of 1970, all functions of the former Federal Radiation Council and the authority of the former Atomic Energy Commission (AEC) for setting "generally applicable environmental radiation standards" were transferred to EPA. In addition, under other environmental statutes EPA has authority to establish various specific environmental standards for radiation protection of the public. The Nuclear Regulatory Commission

was created by the Energy Reorganization Act of 1974 to continue the regulatory activities of the former AEC for ensuring, among other things, the protection of public health and safety from commercial uses of source, byproduct, and special nuclear materials. The NRC also has responsibility for implementing Federal guidance prepared by EPA and approved by the President which pertains to NRC-licensed activities and responsibility for enforcing "generally applicable environmental radiation standards" issued by EPA.

The Congress of the United States has authorized and directed NRC and EPA to: (1) conduct preliminary planning and design studies for epidemiological research on the health effects of low-level ionizing radiation; (2) submit to Congress by April 1, 1979 an assessment of their capabilities and needs in the area of health effects of ionizing radiation research; and (3) submit a report to Congress by September 30, 1979, which includes a study of options for Federal epidemiological research on the health effects of low-level ionizing radiation, with evaluations of the feasibility of such options.

In order to clarify their respective roles with regard to the conduct of the planning studies, the EPA and NRC agree as follows:

1. In complying with the specific requirement of Subsection 5C of the 1979 NRC Authorization bill (item (2) in the preceding paragraph), NRC and EPA will separately prepare assessments of capabilities and research needs in the area of health effects of low-level ionizing radiation for their respective agencies, and will jointly prepare the report to Congress of the results of those assessments.

2. Preparation of the technical scopes of work for the preliminary planning and design studies, selection of the type of organizations most appropriate to conduct such studies and monitoring of the technical progress and the effort, will be accomplished under the direction of a five-member scientific review group. It will consist of members of the professional staffs of NRC, EPA, and the Department of Health, Education, and Welfare (HEW), two members designated by NRC and two by EPA with each other's agreement, and one member designated by HEW, with NRC's and EPA's agreement. EPA will select, with NRC's agreement, the chairperson of this review group. NRC will select, with EPA's agreement, a program manager (not a member of the review group), to be responsible for the day-to-day management of the feasibility and planning studies and for the submission of technical reports to the review group.

3. Any questions that cannot be resolved by the scientific review group will be resolved by conference between the EPA Assistant Administrator for Air, Noise, and Radiation Programs and the Director of NRC's Office of Standards Development.

4. As appropriate during the conduct of the studies, NRC and EPA shall consult with appropriate scientific organizations and Federal and State agencies.

5. NRC and EPA professional staffs will be utilized for preparation of work scopes, technical and administrative management of studies, and preparation of necessary reports to the Congress. The NRC will make available up to $500,000 for outside assistance for the studies. If a private contractor is to be selected, the Division of Contracts of the Nuclear Regulatory Commission will provide administrative support for issuing requests for proposals, receiving proposals, making contract awards, and administering the funds authorized for this purpose.

6. After review of the report by the scientific review group, the report will be sent to the Commission and Administrator of EPA for final approval prior to transmittal to the Congress.

LEE V. GOSSICK,
*Executive Director for Operations, U.S. Nuclear Regulatory Commission.*

DAVID G. HAWKINS,
*Assistant Administrator for Air, Noise and Radiation, U.S. Environmental Protection Agency.*

STEPHEN J. GAGE,
*Assistant Administrator for Research and Development, U.S. Environmental Protection Agency.*

[FR Doc. 79-1791 Filed 1-17-79; 8:45 am]

---

[7590-01-M]

## STUDY OF NUCLEAR POWER PLANT CONSTRUCTION DURING ADJUDICATION

### Establishment and First Meeting

The Nuclear Regulatory Commission has established an advisory committee to study the issue of nuclear power plant construction during adjudication. The study group will examine the present NRC licensing process to develop options for dealing with issues arising from the present practice of permitting construction of nuclear power plants while challenges to their construction permits or limited work authorizations are under adjudication. Among the reasons for initiating this study are the following:

a. Irrevocable changes can be made in the site environment during review.

b. Large sums spent on construction, ultimately derived from the rate-paying or tax-paying public, as well as from investors, are being placed at risk.

c. Construction work underway can create psychological pressure on decision makers to uphold permits under conditions when a proper balancing of factors might have led to revocation or modification.

d. Activities performed while a construction permit is under review might ultimately prove to be the decisive factor in tipping a cost-benefit balance in favor of a plant, when that balance before construction was unfavorable.

e. The cloud of litigation during construction, or fear of it, can make utilities' planning more difficult, and result in undesirable distortions of rational planning.

The study group will examine experience under the Commission's current regulations permitting construction during adjudication as well as studying the experiences and practices of other agencies with similar responsibilities and functions. The study group will consider a variety of topics including the Commission's immediate effectiveness rule (10 CFR 2.764), its stay regulations (10 CFR 2.788), adjudicatory proceedings other than direct review, increased use of rulemaking to resolve issues on a generic basis, and any other matters that its members may view as having a potential bearing on the issues considered in the study. The study will not consider possible revision of the Commission's appellate structure which is currently the subject of a separate examination being performed by the Office of the General Counsel.

The report of the study group is expected to aid the NRC in establishing policy in the important area of when and under what conditions it should permit construction of nuclear power reactors to begin. The Commission desires the maximum practical public participation, and all meetings of the group will be publicly noticed and will be open to the public.

The first meeting of the study group will be at 9:30 A.M. on Friday, February 2, 1979, at the headquarters of the NRC at 1717 H Street, N.W., Washington, D.C. 20555. The purpose of the first meeting will be for the study group members to discuss their views on the data that will be necessary to prepare the group's report and also to begin work on the group's interim report to the Commission which must be submitted within 60 days after the first meeting. At this meeting there will be a limited amount of time available for members of the public to make oral statements to the study group. Written comments, addressed to the Secretary of the Commission, United States Nuclear Regulatory Commission, Washington, D.C., 20555, Attention: Docketing and Service Branch, will be accepted for one week after the meeting. Similar arrangements will be made for future meetings of the group which will be held at 9:30 A.M. on the first Friday of each month and at other times as necessary. The location of future meetings may change depending upon circumstances. The Chairman of the study group is empowered to conduct the meetings in a manner that, in his judgment, will facilitate the group's work, including, if necessary, continuing or rescheduling meetings to another day.

A file of documents relevant to the group's work including the minutes of each meeting, memoranda exchanged between group members, and other documents will be maintained and will be available for inspection and copying at the Commission's Public Document Room at 1717 H Street, N.W., Washington, D.C. 20555. The Secretary of the NRC will maintain a mailing list for persons interested in receiving no-

tices of the group's meetings and actions. Anyone wishing to be on that list should write to: Secretary of the Commission, Nuclear Regulatory Commission, Washington, D.C., 20555, Attention: Docketing and Service Branch.

The study group will provide its final report to the Commisson by November 1, 1979. The Commission will be furnishing the study group with administrative and secretarial services and with funds for other necessary expenses. Copies of the study group's charter have been filed with the appropriate standing committees of Congress and with the Library of Congress as required by the Federal Advisory Committee Act. For further information on the study group's mission please call Stephen S. Ostrach, Office of the General Counsel, Nuclear Regulatory Commission (202) 634-3224.

Dated at Washington, D.C. this 12th day of January, 1979.

GARY MILHOLLIN,
*Chairman.*

[FR Doc. 79-1786 Filed 1-17-79; 8:45 am]

---

[4910-58-M]

## NATIONAL TRANSPORTATION SAFETY BOARD

[N-AR 79-3]

### SAFETY RECOMMENDATIONS AND RESPONSES

#### Availability

Cooperative government and industry action to cut the high rate of railroad/highway grade crossing accidents in Florida's 240-mile Jacksonville-Tampa high-speed rail corridor was urged by the National Transportation Safety Board following investigation of the October 2, 1977, grade crossing accident in Plant City, Fla. The accident occurred when a westbound Amtrak passenger train struck a northbound pickup truck at the Turkey Creek Road crossing.

Investigation showed that the crossing was equipped with red flashing signals, which were operating. The train was traveling at 70 mph in a 79-mph speed zone; the pickup truck was traveling at 50 mph in a 45-mph speed zone. The 10 occupants of the truck died in the crash. None of the traincrew or its 30 passengers was injured.

On the north approach to the crossing, the westbound train was not visible to the northbound driver until she passed a stand of trees 400 feet south of the crossing. At that point the train was 559 feet from the crossing and there was no way the train could have stopped. The pickup truck could have stopped short of the crossing after the train became visible, but the time and distance available were marginal. An autopsy of the driver of the truck disclosed a 0.14-percent blood alcohol level. The Florida traffic code states that blood alcohol level of 0.10 percent or more is prima facie evidence of driving while under the influence of alcohol.

As a result of its investigation of this accident, the Safety Board on December 27 recommended that:

*Federal Highway Administration, Federal Railroad Administration, National Railroad Passenger Corporation (Amtrak), Seaboard Coast Line Railroad Company, and Florida Department of Transportation—*

Cooperate to take necessary corrective action to reduce the high frequency of railroad/highway grade crossing accidents along the 240 miles of track between Jacksonville and Tampa, Fla. (H-78-71)

*City of Plant City, Fla.—*

Cooperate with the Florida Department of Transportation and the Seaboard Coast Line Railroad Company to bring about the installation of the recommended reflectorized, lighted, automatic gates and cantilever flashing light signals and uniform warning signal timing devices at the Turkey Creek crossing in Plant City. (H-78-72)

Install the required advance pavement markings on Turkey Creek Road on both approaches to the railroad/highway grade crossing. (H-78-73)

Relocate the advance railroad/highway grade crossing warning signs on Turkey Creek Road 250 feet before both approaches to the grade crossing, as required by the Manual on Uniform Traffic Control Devices. (H-78-74)

As part of its Operation Lifesaver program, emphasize in its selective traffic law enforcement program grade crossing warning signal violators and those who drive while under the influence of alcohol or drugs. (H-78-75)

*National Highway Traffic Safety Administration—*

Evaluate and report to the National Transportation Safety Board those alcohol countermeasures that the NHTSA found to be practical and effective for the reduction in the number of alcohol-involved drivers. (H-78-76)

*Governor of Florida—*

Encourage State-level participation in and high-priority implementation of effective and continuous Statewide Operation Lifesaver railroad/highway grade crossing and selective law enforcement programs. (H-78-77)

*Florida Department of Transportation—*

Insure that the improvement plans for upgrading the Turkey Creek Road railroad/highway grade crossing, as well as all crossings on the 240 miles of track between Jacksonville and Tampa, Fla., include provisions for uniform warning times for various train speeds in conformity with the American Association of Railroads and Federal Highway Administration guidelines. (H-78-78)

*Seaboard Coast Line Railroad Company—*

Cooperate with the city of Plant City to expedite the installation of the recommended reflectorized, lighted automatic railroad/highway grade crossing gates and cantilever light signals at the Turkey Creek crossing in Plant City, Fla. (H-78-79)

Recommendation H-78-75, directed to Plant City, is designated "Class I, Urgent Action." The other eight recommendations are designated "Class II, Priority Action."

Copies of the Safety Board's formal investigation report will be made available within the next few weeks. The report will provide factual information, analysis, conclusions, and the probable cause of the Plant City accident.

### RESPONSES TO SAFETY RECOMMENDATIONS

#### *Highway*

*H-78-67 and 68.*—Letter of December 12 from the Department of Transportation of the State of North Carolina responds to the Safety Board's letter of December 5 and concerns recommendations issued following investigation of the January 5, 1978, tractor-semitrailer/pickup truck collision on N.C. Route 226 near Marion, N.C. The recommendations called for upgrading State guardrail installations and maintaining edge line markings at the accident site by clearing debris from the pavement surface. (See 43 FR 48742, October 19, 1978.)

The Safety Board on December 5, with reference to the Department's October 5 response, asked to be informed of the final action concerning the guardrail installations at the accident site and to be advised if the pavement edge line markings have indeed been maintained. The Department's December 12 response reports that a study, soon to be completed, will determine the feasibility and estimated cost of upgrading the existing guardrail installations at the accident site. The Department also advises that the pavement markings at the site were repainted in July 1978 and are being properly maintained.

#### *Intermodal*

*I-78-13.*—Letter of December 27 from the Environmental Protection Agency is in response to a recommendation issued as a result of the Safety Board's hearing, held last April 4-6, on derailments and the carriage of hazardous materials. The recommendation asked EPA to assist the U.S. Department of Transportation in assuring that hazardous materials regulations issued by the Department are in agreement with EPA's hazardous materials regulation. (See 43 FR 30149, July 13, 1978.)

EPA reports that for several months EPA and DOT have been cooperating to amend DOT regulations (49 CFR Parts 171 and 172) to require shippers

to identify substances designated in EPA hazardous substance discharge regulations (49 CFR Part 11). EPA is also revising the regulations which define reporting requirements for hazardous substances discharges (40 CFR Part 117). Target dates of December 1978 for Part 117 and January 1979 for Parts 171 and 172 were set for proposing revised regulations, with final promulgations in April 1979.

*Marine*

*M-78-45 through 52.*—The U.S. Coast Guard on December 22 responded to recommendations issued as a result of the grounding of the M/V DAUNTLESS COLOCOTRONIS in the Mississippi River near New Orleans, La., July 22, 1977. In seeking better means of coping with submerged wrecks in busy waterways, the Safety Board's recommendations to the Coast Guard and the Corps of Engineers, U. S. Army, included these objectives: Improved standards for defining a navigation hazard in the Mississippi River; an annual summary of Mississippi River wrecks which continue to be hazardous to mariners; greater clarity in stating water depths over submerged wrecks; improved firefighting training for tanker crews, better foreign crew compliance with international fire drill requirements, and enhanced fireproofing of foreign-flag tankers; and international agreement on an exterior display on all large ships which would show emergency personnel the ship's interior layout. (See 43 FR 34222, August 3, 1978.)

In response to M-78-45, Coast Guard states that it will contact the U.S. Army Corps of Engineers through the Second and Eighth Coast Guard Districts to develop standards to establish minimum criteria for defining hazards to navigation in the Mississippi River. Results of this effort will form the basis for a publication listing the hazards to navigation in the Mississippi River, as called for in recommendation M-78-46; the study effort will also address the various means of measuring the level of water in the Mississippi River and determine which is most beneficial for dissemination in Local Notices to Mariners and Broadcasts to Mariners, as recommended in M-78-47.

With reference to M-78-48, which recommended that Coast Guard seek international agreement to improve the firefighting training for officers and crew on tankships, Coast Guard notes that the recently adopted (July 1978) International Convention on Standards of Training, Certification and Watchkeeping for Seafarers, 1978, contains in the Annex Chapter V, Regulation V/1 entitled "Mandatory Minimum Requirements for the Training and Qualifications of Masters, Officers and Ratings of Oil Tankers." These requirements are spelled out in Coast Guard's December 22 letter. Coast Guard also reports publication on April 25, 1977, of a notice of proposed rulemaking in 46 CFR 10.11 and 46 CFR 12.20 tankerman requirements. However, due to lengthy comments received on this proposal, as well as the General Accounting Office's Liquefied Energy Gas Report, the requirements of the International Convention on Standards of Training, Certification and Watchkeeping for Seafarers, 1978, and the requirements of Public Law 94-474 (Port and Tanker Safety Act of 1978), this proposal is being withdrawn and will be reissued as a new notice of proposed rulemaking by mid-1979.

Recommendation M-78-49 asked Coast Guard to insure that all foreign tankships that enter U.S. waters comply with the 1960 Safety of Life at Sea Convention (SOLAS) requirements for fire drills. Coast Guard notes that SOLAS Regulation 26, Chapter III, requires fire drills for tankship at intervals of not more than a month and within 24 hours of leaving port if more than 25 percent of the crew have been replaced at that port. Coast Guard does not concur with a recommendation requiring that each foreign-flag tank vessel entering U.S. waters be boarded for determining compliance with the SOLAS requirements for drills. As required by Presidential initiatives and Commandant Instruction 16711.4 dated February 16, 1978, each foreign-flag tank vessel entering U.S. waters is examined at least annually with reexaminations as considered necessary. Coast Guard notes that the decision to board and examine each foreign-flag tank vessel is based upon that vessel's operational and examination history as contained in the Marine Safety Information System.

Recommendation M-78-50 asked for regulations, under the Ports and Waterways Act of 1972, to require all foreign tankships built after 1980 and entering U.S. waters to meet the fire safety requirements of the 1974 SOLAS Convention. Coast Guard reports that ratification of SOLAS 74 is making substantial progress internationally and that the required amount of tonnage necessary for ratification has been obtained. Only nine more countries are needed to have the requisite 25 countries with at least 50 percent of the world's gross tonnage. Final rules implementing this action are anticipated by June 1979.

With reference to M-78-51, Coast Guard reports that the chairman of the U.S. SOLAS working group on fire protection will present to the working group for consideration the proposal to require all ships of more than 500 gross tons to post, under watertight cover and outside the ship's deckhouse in a prominent place, an arrangement plan of the ship to aid emergency personnel.

The Coast Guard does not believe that it is necessary to seek international agreement to require that cargo pumps on tankships be segregated from all sources of vapor ignition by gastight bulkheads and that pump shafts penetrating these bulkheads be fitted with stuffing boxes or other approved glands which will prevent vapor ignition, as recommended by the Safety Board in M-78-52. Coast Guard states, "The requirements paraphrase 46 CFR 32.60-20(a). Classification societies (ABS, LLOYD's DNV, NKK) and IMCO Resolution A. 325 (IX) have similar requirements. The problem occurring on the DAUNTLESS COLOCOTRONIS was not one of arrangement; it was due to improper installation of the shaft packing gland."

*Railroad*

*R-78-57.*—Letter of December 22 from the Atlanta & Saint Andrews Bay Railway Company is in response to a recommendation issued November 27, following investigation of the derailment of one of the Company's trains at Youngstown, Fla., last February 26. The recommendation called for maintaining a 24-hour radio communications monitoring capability between trains and communications based stations. (See 43 FR 59558, December 21, 1978.)

In response, the Company informed the Board that on October 12, 1978, before receiving the recommendation, the Company put in service a 24-hour radio communication monitoring system on the Bay Line.

NOTE.—Single copies of the Safety Board's recommendation letters and letters in response to recommendations are available without charge. Requests for copies must be in writing and provide the recommendation number and date of letter. Address inquiries to: Public Inquiries Section, National Transportation Safety Board, Washington, D.C. 20594.

(Secs. 304(a)(2) and 307 of the Independent Safety Board Act of 1974 (Pub. L. 93-633, 88 Stat. 2169, 2172 (49 U.S.C. 1903, 1906)).)

MARGARET L. FISHER,
*Federal Register Liaison Officer.*

JANUARY 15, 1979.

[FR Doc. 79-1798 Filed 1-17-79; 8:45 am]

---

[3110-01-M]

## OFFICE OF MANAGEMENT AND BUDGET

### IMPLEMENTATION OF SECTION 223(a)(3) OF PUBLIC LAW 95-507

#### Invitation for Public Comment

AGENCY: Office of Federal Procurement Policy (OFPP), Office of Management and Budget.

ACTION: Notice of proposed Policy Letter implementing section 223(a)(3) of Pub. L. 95-507.

SUMMARY: On October 24, 1978, the President signed into law Pub. L. 95-507, amending the Small Business Investment Act and the Small Business Act.

Public Law 95-507, among other things, requires that upon the request of a small business concern a Federal agency must provide to it "adequate citations to each major Federal law or agency rule with which such business concern must comply in performing" a contract to be let by the agency.

The proposed policy letter requires that procurement solicitations estimated to result in a contract of $10,000 or more indicate by adequate citation the Federal law or agency rule on which each contract provision is based.

DATE: Comments must be received by February 15, 1979.

ADDRESS: Comments are to be submitted to the Office of Federal Procurement Policy, OMB, 726 Jackson Place, NW., Room 9025, Washington, D.C. 20503.

FOR FURTHER INFORMATION CONTACT:

Mr. Owen Birnbaum, Deputy Associate Administrator for Acquisition Law, (202) 395-3455.

LESTER A. FETTIG,
*Administrator.*

Policy Letter No. 79-

To: The Heads of Executive Departments and Establishments.

Subject: Contract Citations.

Section 223(a)(3) of Public Law 95-507, October 24, 1978, requires that Federal agencies provide to a requesting small business, with respect to a contract to be awarded, "adequate citations to each major Federal law or agency rule with which such business concern must comply in performing such contract."

Accordingly, in all procurement solicitations estimated to result in a contract that will exceed $10,000 the contracting officer shall, at the end of each provision, indicate by adequate citation the Federal law or agency directive or rule on which the provision is based. If the provision already contains, within its text, the statutory or administrative basis for the provision, that fact will satisfy this requirement.

LESTER A. FETTIG,
*Administrator.*

[FR Doc. 79-2034 Filed 1-17-79; 8:45 am]

[7710-12-M]

## POSTAL SERVICE

### TEMPORARY CHANGE IN MAIL CLASSIFICATION SCHEDULE

#### Third-Class Carrier Route Presort

On September 8, 1978, the United States Postal Service requested the Postal Rate Commission to submit to the Governors of the Postal Service a recommended decision on a change in the mail classification schedule establishing a new subclass of third-class mail, a third-class carrier route presort subclass, pursuant to Chapter 36 of Title 39, United States Code. An explanation of the Postal Service proposal was published in the FEDERAL REGISTER by the Postal Rate Commission on September 18, 1978 (43 FR 41440).

In its filing with the Postal Rate Commission, the Postal Service proposed the addition of section 300.222 to the Domestic Mail Classification Schedule as follows:

*300.222 Carrier route presort*

*a. Carrier route presort mail consists of mailings of properly prepared and presorted separately addressed pieces of third-class mail of identical weight and size, with dimensions not to exceed 10 inches x 12 inches x .75 inch (except as provided in section 300.222c). Each mailing must consist of ten pieces for each carrier route included in the mailing, and a minimum of 2,000 pieces per mailing.*

*b. Mail for each individual carrier route included in the mailing must be sacked or containerized in the manner prescribed by the Postal Service.*

*c. Merchandise samples with detached labels may be sent as carrier route presort even though their dimensions may exceed the prescribed maxima, if they meet all other requirements of the subclass and the detached labels do not exceed those dimensions.*

The proposal included the addition of a "carrier route presort" column to section 300.223 as follows:

300.223 *Rates and fees, bulk rates.*

* * * * *

| | Special Rates for Authorized Organizations Only | Regular Rates | Carrier Route Presort |
|---|---|---|---|
| a. Books and catalogs having 24 or more bound pages with at least 22 printed, seeds, cuttings, bulbs, roots, scions, and plants. | * * * | * * * | 36¢ per pound or fraction minus 1.5¢ per piece |
| Minimum rate per piece | * * * | * * * | 6.9¢ |
| b. All matter, except the items in (a) included in the first- or second-class. | | | 41¢ per pound or fraction minus 1.5¢ per piece |
| Minimum rate per piece | * * * | * * * | 6.9¢ |

In addition, the proposal included the deletion of section 300.22c which reads as follows:

c. Identifying words as follows must be printed or rubber stamped by the mailer either in or immediately adjacent to permit imprints, meter stamps, or precanceled stamps:

(1) BULK RATE or abbreviation BLK.RT. by mailers other than nonprofit organizations.

(2) NONPROFIT ORGANIZATION or the abbreviation NONPROFIT ORG. by nonprofit organizations.

Since the Postal Rate Commission has not transmitted its recommended decision to the Governors of the Postal Service within 90 days after submission of the Postal Service's request (September 8, 1978), the Postal Service will, under the authority of 39 U.S.C. 3641(e), place in effect at 12:01 a.m. on January 28, 1979, temporary changes in the mail classification schedule as described above.

(39 U.S.C. 401, 403, 404, 3621, 3623, 3641)

W. ALLEN SANDERS,
*Acting Deputy General Counsel.*

[FR Doc. 79-2006 Filed 1-16-79; 1:44 pm]

[8010-01-M]

## SECURITIES AND EXCHANGE COMMISSION

[Release No. 34-15486; File No. SR-Amex-78-25]

### AMERICAN STOCK EXCHANGE, INC.

#### Self-Regulatory Organization; Proposed Rule Change

Pursuant to section 19(b)(1) of the Securities Exchange Act of 1934 (the "Act"), 15 U.S.C. 78s(b)(1), as amended by Pub. L. No. 94-29, 16 (June 4, 1975), notice is hereby given that on October 2, 1978 the above-mentioned self-regulatory organization filed with the Securities and Exchange Commission a proposed rule change as follows:

AMEX'S STATEMENT OF TERMS OF SUBSTANCE OF THE PROPOSED RULE CHANGE

The proposed rule change would permit a member organization to extend credit to customers on shelf-registered, control or restricted securities within the guidelines of Regulation T and the amount set forth in the rule. The total amount of such credit which a member organization may extend will be limited as prescribed from time to time by the Exchange, but in no event greater than 25% of its excess Net Capital. The total amount of credit which may be extended to all customers on such securities of any one issuer is limited to 5% of excess Net Capital. The firm must take deductions in the computation of its net capital, for the amount of credit extended on such securities in order to determine whether it can expand, or if it must reduce its business.

Documentation must be obtained by the member organization to insure the ready saleability and marketability prior to extending credit on shelf-registered securities. The Exchange may require formal reports from member organizations showing the amount of credit extended in accordance with the rule.

AMEX'S STATEMENT OF BASIS AND PURPOSE OF PROPOSED RULE CHANGE

The proposed amendments would permit member organizations to extend credit to customers on shelf-registered, control or restricted securities within the guidelines of Regulation T and, thereby, allow member organizations to better compete with non-members, which are permitted to extend credit on such securities. Under the proposed amendments, safeguards would be imposed to assure the financial integrity of member organizations and to protect investors.

The proposed amendments to Rules 462 and 471 are designed to remove impediments to a free and open market and to eliminate any burden on competition not necessary or appropriate as well as the protection of investors and of the public interest in furtherance of the purposes of the Act, and therefore are authorized by subparagraphs (b)(5) and (b)(8) of Section 6 of the Act.

COMMENTS RECEIVED FROM MEMBERS, PARTICIPANTS OR OTHERS ON PROPOSED RULE CHANGE

No comments were solicited or received with respect to the proposed rule change.

BURDEN ON COMPETITION

The Amex has determined that no burden on competition will be imposed by the proposed rule change.

On or before Februay 22, 1979, or within such longer period (i) as the Commission may designate up to 90 days of such date if it finds such longer period to be appropriate and publishes its reasons for so finding or (ii) as to which the above-mentioned self-regulatory organization consents, the Commission will:

(A) By order approve such proposed rule change, or

(B) Institute proceedings to determine whether the proposed rule change should be disapproved.

Interested persons are invited to submit written data, views and arguments concerning the foregoing. Persons desiring to make written submissions should file six (6) copies thereof with the Secretary of the Commission, Securities and Exchange Commission, Washington, D.C. 20549. Copies of the filing with respect to the foregoing and of all written submissions will be available for inspection and copying in the Public Reference Room, 1100 L Street, N.W., Washington, D.C. Copies of such filing will also be available for inspection and copying at the principal office of the above-mentioned self-regulatory organization. All submissions should refer to the file number referenced in the caption above and should be submitted on or before February 20, 1979.

For the Commission by the Division of Market Regulation, pursuant to delegated authority.

GEORGE A. FITZSIMMONS,
*Secretary.*

JANUARY 10, 1979.

EXHIBIT I-A—PROPOSED AMENDMENTS TO RULES 462 AND 471

Rules 462 and 471 of the American Stock Exchange is proposed to be amended as set forth below. *Italics* indicate added material.

RULE 462—EXCEPTIONS

(c) The foregoing requirements of this Rule are subject to the following exceptions:

* * * * *

*(9) Shelf-Registered, Control and Restricted Securities.*

*(A) Shelf-Registered Securities—The margin which must be maintanined in margin accounts of customers for securities which are the subject of a current and effective registration for a delayed offering (shelf-registered securities) shall be at least the amount required by paragraph (b) of this Rule provided the member organization:*

*(i) Obtains a current prospectus in effect with the Securities and Exchange Commission, meeting the requirements of Section 10 of the Securities Act of 1933, covering such securities;*

*(ii) Has no reason to believe the Registration Statement is not in effect or that the issuer has been delinquent in filing such periodic reports as may be required of it with the Securities and Exchange Commission and is satisfied that such registration will be kept in effect and that the prospectus will be maintained on a current basis;*

*(iii) Retains a copy of such Registration Statement, including the prospectus, in an easily accessible place in its files; and*

*(iv) Values such securities more conservatively than securities of the same class which are freely traded, in the light of current market prices, the amount which might be realized upon liquidation, unusually rapid or volatile changes in value or volume and other business considerations deemed appropriate under the circumstances in determining fair value.*

*Shelf-registered securities which do not meet all the conditions prescribed above shall have no value for purposes of this Rule. (Also see paragraph (C) of this subsection (9)).*

*(B) Control and Restricted Securities—The margin which must be maintained in margin accounts of customers for control securities and other restricted securities which are saleable under Rules 144 or 145(d) of the Securities Act of 1933, shall be 40% of the current market value of such securities "long" in the account, provided the member organization;*

*(i) In computing Net Capital under Rule 470 deducts any cash margin deficiencies in customers' accounts based upon a margin requirement of 25% for such securities and values only that amount of such securities which are then readily saleable under Rules 144 or 145(d) of the Securities Act of 1933 for purposes of determining such deficiencies;*

*(ii) Makes volume computations necessary to determine the amount of securities saleable under Rules 144 or 145(d) of the Securities Act of 1933 on a weekly basis or at such greater frequency as the member organization and/or the Exchange may deem appropriate in the circumstances; and*

*(iii) Values such securities more conservatively than securities of the same class which are freely traded, in the light of current market prices, the amount which might be realized upon liquidation, unusually rapid or volatile changes in value or volume and other business considerations deemed appropriate under the circumstances in determining fair value. (Also see paragraph (C) of this subsection (9)).*

*(C) Additional Requirements on Shelf-Registered Securities and Control and Restricted Securities—Notwithstanding the provisions of para-*

*graphs (A) and (B) of this subsection (9), a member organization extending credit on shelf-registered, control and other restricted securities in margin accounts of customers shall be subject to the following requirements;*

*(i) The credit extended to all customers on such securities may not in the aggregate exceed a percentage of the member organization's excess Net Captial as prescribed from time to time by the Exchange but in any event not greater than 25% of its excess Net Capital. The amount of the total credit extended, which has been deducted in computing Net Capital, need not be included in calculating this limitation.*

*(ii) The credit extended to all customers on such securities of any one issuer may not in the aggregate exceed 5% of the member organizations's excess Net Capital. The amount of the total credit extended, which has been deducted in computing Net Capital, need not be included in calculating this limitation.*

*(iii) The aggregate credit extended on such securities reduced by the amount of credit extended which has been deducted in computing Net Capital under Rule 470 shall be deducted from Net Capital for purposes of determining a member organization's status under Rule 471.*

*(iv) The Exchange may at any time require reports from member organizations showing relevant information as to the amount of credit extended on shelf-registered, control and restricted securities and the amount, if any, charged to Net Capital due to such security positions.*

Rule 471(a) A member organization which carries customer accounts shall not expand its business during any period in which any of the following conditions exist for more than fifteen (15) consecutive business days:

* * * * *

(iv) Capital withdrawals including maturities scheduled during the next six months *and/or the special deduction from net capital set forth in Rule 462(c)(9)(C)(iii)* would result in the condition described in (i), (ii) or (iii) above, or

* * * * *

(b) A member organization which carries customer accounts shall forthwith reduce its business to a point enabling its available capital to meet the standards of paragraph (a) if for more than fifteen (15) consecutive business days:

* * * * *

(iv) Capital withdrawals including maturities scheduled during the next six months *and/or the special deduction from net capital set forth in Rule 462(c)(9)(C)(iii)* would result in the condition described in (i), (ii) or (iii) above, or

[FR Doc. 79-1756 Filed 1-17-79; 8:45 am]

---

[8010-01-M]

[Release No. 34-15482; File No. SR-CBOE-78-37]

## CHICAGO BOARD OPTIONS EXCHANGE, INC.

### Self-Regulatory Organizations; Proposal Rule Change

Pursuant to Section 19(b)(1) of the Securities Exchange Act of 1934, 15 U.S.C. 78s(b)(1) as amended by Pub. L. No. 94-29, 16 (June 4, 1975), notice is hereby given that on January 5, 1979 the above-mentioned self-regulatory organization filed with the Securities and Exchange Commission a proposed rule change as follows:

### Text of the Proposed Rule Change

The Chicago Board Options Exchange, Incorporated (the "CBOE" or "Exchange") proposes to amend Section 11.4 of the CBOE Constitution as set forth below. (Italics indicate words to be added.)

### Officers and Employess Restricted

Section 11.4.

(a) No Change

(b) No Change

(c) *Paragraphs (a) and (b) above of this Section shall not be construed to preclude any salaried officer or employee of the Exchange or of any corporation in which the Exchange owns a majority of the stock from performing his duties and responsibilities as assigned to him by such organization.*

### Purpose of the Proposed Rule Change

CBOE states that the purpose of the proposed change to Section 11.4 of the CBOE Constitution (Officers and Employees Restricted) is to make clear that such constitutional provision shall not operate to preclude any salaried officer of employee of the Exchange, or of any corporation in which the Exchange owns a majority of the stock, from performing his duties as assigned to him by the Exchange or by such corporation.

### Basis Under the Act

CBOE states that the basis under the Act for the proposed rule change is Section 6(b)(5) in that the change to the CBOE Constitution is designed to facilitate transactions in securities by making clear that Section 11.4 of the Constitution was not intended to restrict Exchange officers and employees from effecting securities transactions as part of their assigned duties.

### Comments Received from Members, Participants, or Others on Proposed Rule Change

No comments were solicited or received by the CBOE respecting the proposed rule change.

### Burden on Competition

The Exchange does not believe the proposed rule change will impose any burden on competition.

The foregoing rule change has become effective, pursuant to Section 19(b)(3) of the Securities Exchange Act of 1934. At any time within sixty days of the filing of such proposed rule change, the Commission may summarily abrogate such rule change if it appears to the Commission that such action is necessary or appropriate in the public interest, for the protection of investors, or otherwise in furtherance of the purposes of the Securities Exchange Act of 1934.

Interested persons are invited to submit written data, views and arguments concerning the foregoing. Persons desiring to make written submissions should file 6 copies thereof with the Secretary of the Commission, Washington, D.C. 20549. Copies of the filing with respect to the foregoing and all written submissions will be available for inspection and copying in the Public Reference Room, 1100 L Street, N.W., Washington, D.C. Copies of such filing will also be available for inspection and copying at the principal office of the above-mentioned self-regulatory organization. All submissions should refer to the file number referenced in the caption above and should be submitted on or before February 8, 1979.

For the Commission by the Division of Market Regulation, pursuant to delegated authority.

George A. Fitzsimmons,
*Secretary.*

January 9, 1979.

[FR Doc. 79-1757 Filed 1-17-79; 8:45 am]

---

[8010-01-M]

[Rel. No. 20883; 70-6249]

## INDIANA-KENTUCKY ELECTRIC CORP. AND OHIO VALLEY ELECTRIC CORP.

### Proposed Financing of Pollution Control Facilities

January 10, 1979.

Notice is hereby given that Indiana-Kentucky Electric Corporation ("IKEC"), P.O. Box 97, Madison, Indiana 47250, and Ohio Valley Electric Corporation ("OVEC"), P.O. Box 468, Piketon, Ohio 45661, both indirect electric utility subsidiaries of Allegheny Power System, Inc., American Electric Power Company, Inc., and Ohio

Edison Company, all registered holding companies, have filed with this Commission an application-declaration pursuant to the Public Utility Holding Company Act of 1935 ("Act"), designating Sections 9(a), 10 and 12(d) of the Act and Rule 44(b)(3) promulgated thereunder as applicable to the proposed transactions. All interested persons are referred to the appplication-declaration, which is summarized below, for a complete statement of the proposed transactions.

OVEC and its wholly-owned subsidiary IKEC were organized on October 1, 1952, to provide the power requirements of the gaseous diffusion plant at Portsmouth, Ohio, now owned and operated by the Department of Energy ("DOE"). Such services are provided pursuant to a power agreement ("DOE Agreement"), as modified from time to time. The DOE Agreement provides, *inter alia*, that DOE will pay OVEC and IKEC the entire cost of certain replacements of property and plant, including replacements reasonably required to comply with any governmental pollution control requirements. The DOE Agreement also provides that OVEC will use its best efforts to arrange for financing pollution control replacements from sources of capital funds other than DOE unless DOE prefers to finance OVEC's and IKEC's pollution control replacements directly. Under the DOE Agreement, DOE agrees to pay an amount equal to the principal component of any purchase price payment under an installment sales agreement relating to the purchase by OVEC or IKEC of any pollution control replacement, and an amount equal to the interest component of any such purchase price payment. The DOE Agreement terminates on December 31, 1979. OVEC and DOE are engaged in negotiations with respect to Modification No. 10 which would extend its term to October 14, 1992, and contain certain other provisions the details of which have not been agreed upon.

OVEC has under construction one 1,000-foot smokestack, a foundation and related facilities at its Kyger Creek plant (the "Ohio Project"), which will replace three existing 538-foot smokestacks. The Ohio Project is believed by OVEC to be reasonably required to enable it to limit the emission of pollutants or to be otherwise reasonably necessary in order to comply with governmental pollution control requirements. It is currently estimated that the Ohio Project will cost not more than $18,000,000. OVEC proposes to enter into an agreement ("OVEC Agreement") for the financing of the cost of the Ohio Project by its sale to the Ohio Air Quality Development Authority ("Authority"), which under Ohio statutes is authorized to enter into agreements concerning the acquisition and construction of pollution control facilities. The OVEC Agreement will provide for the construction of the facilities comprising the Ohio Project by the Authority and for the issuance by the Authority of one or more series of Air Quality Development Revenue Bonds ("Authority Bonds") to cover the costs of construction (as defined in the OVEC Agreement), including the issuance of an initial principal amount of up to $18,000,000 of Authority Bonds. The proceeds from the sale of the Authority Bonds will be deposited with a bank as trustee ("Authority Trustee") under an indenture pursuant to which the Authority Bonds are to be issued and secured. Such proceeds will be withdrawn by OVEC upon certification to the Authority of the costs of construction.

The OVEC Agreement will also provide for the sale of the Ohio Project to OVEC, the payment by OVEC of the purchase price thereof in installments over a term of years and the assignment and pledge to the Authority Trustee by the Authority of its interest in and to monies (including the interest and principal components of the purchase price) receivable by the Authority under the OVEC Agreement. DOE and OVEC will consent to such assignment so that amounts equal to the interest and principal components of the purchase price payable by OVEC to the Authority will be paid by DOE directly to the Authority Trustee. The principal and interest components will be payable in such amounts as to enable the Authority to pay when due the principal and interest on the Authority Bonds. The OVEC Agreement also obligates OVEC to pay the fees and charges of the Authority Trustee, as well as certain expenses of the Authority.

OVEC has the option to prepay the purchase price in whole (i) upon the occurrence of certain events by paying amounts sufficient to redeem all Authority Bonds then outstanding and all other amounts payable under the indenture, or (ii) at any time by depositing monies in the bond fund under the indenture or delivering to the Authority Trustee governmental obligations sufficient in either case to provide for the release of the Authority indenture in accordance with its terms. Upon prepayment of the entire purchase price of the Ohio Project, OVEC may terminate the OVEC Agreement. OVEC may also prepay the purchase price in part, such payments to be paid to the Authority Trustee for deposit in the bond fund under the Authority Indenture and credited against the purchase price and used for the redemption or purchase of outstanding Authority Bonds in the manner and to the extent that oustanding bonds are redeemable or subject to purchase under the indenture.

OVEC will be required to prepay the purchase price of the Ohio Project and redeem all Authority Bonds in the event that (a) on or before November 30, 1979, neither a modification of the DOE Agreement providing for an extension of the term thereof through October 14, 1992, nor an interim arrangement for the supply of electric utility services to DOE at its existing gaseous diffusion plant near Portsmouth, Ohio through March 29, 1980, in either case including contract provisions obligating DOE to pay directly to the Authority Trustee all interest and principal components of the purchase price becoming due during the term of such modification or interim arrangement, shall have become effective; (b) on or before the thirty-first day prior to the date on which any such interim arrangement or any succeeding interim arrangement would otherwise terminate, neither a further interim arrangement for a period of ninety days or more, nor a modification of the DOE Agreement referred to in clause (a) above, in each case including the contract provisions referred to in clause (a) above, shall have become effective; (c) any modification of the DOE Agreement is executed by OVEC which has the effect of reducing or eliminating DOE's obligation to make payments of interest and principal components of the purchase price; or (d) the DOE Agreement shall be about to terminate by action of DOE.

It is stated that OVEC will take necessary action under its mortgage and deed of trust to release the portion of the Ohio Project, to the extent constructed and in place at the plant site, from the lien of its mortgage, and, after such release, will convey the same to the Authority. OVEC will receive from the Authority Bond sale proceeds an amount equal to its original cost for the facilities so conveyed.

Under Ohio law, the interest rate to be borne by the Authority Bonds will be fixed by the Authority. OVEC understands that the interest on the Authority Bonds will not be exempt from federal income taxation. The Authority Bonds are expected to be dated on or about the first day of the month in which they are issued, to bear interest semiannually, to mature at a date or dates not earlier than five years subsequent to the date of their issuance and not later than October 14, 1992, and to be subject to optional and mandatory redemption under the circumstances and terms specified in the indenture. It is contemplated that the Authority bonds will be sold directly by the Authority to an unaffiliated investment

banking firm ("Authority Bond Buyer"), at a price of not less than 97.5% of principal amount, and that the Authority Bond Buyer will contemporaneously resell them (at a price of not more than 2.5% of principal amount above its purchase price) to certain of its customers appearing on a special list of not more than 200 institutional investors, such resales being under circumstances in which counsel for OVEC and the Authority Bond Buyer advise that no registration of a security under the Securities Act of 1933 and that no qualification of an indenture under the Trust Indenture Act of 1939 is required.

IKEC has under construction two 984-foot smokestacks, foundations and related facilities at its Clifty Creek Plant (the "Indiana Project"), which will replace three existing 684-foot smokestacks. The Indiana Project is believed by IKEC to be reasonably required to enable it to limit the emission of pollutants or to be otherwise reasonably necessary in order to comply with governmental pollution control requirements. It is currently estimated that the Indiana Project will cost not more than $20,000,000. IKEC proposes to enter into an agreement ("IKEC Agreement") for the financing of the cost of the Indiana Project by its sale to the City of Madison, Indiana ("City"), which under Indiana statutes is authorized to enter into agreements concerning the acquisition and construction of pollution control facilities. The IKEC Agreement will provide for the construction of the facilities comprising the Indiana Project by the City and for the issuance by the City of one or more series of pollution control and/or economic development revenue bonds ("City Bonds") to cover the costs of construction (as defined in the IKEC Agreement), including the issuance of an initial principal amount of up to $20,000,000 of City Bonds. The proceeds from the sale of the City Bonds will be deposited with a bank as trustee ("City Trustee") under an indenture pursuant to which the City Bonds are to be issued and secured. Such proceeds will be withdrawn by IKEC upon certification to the City of the costs of construction.

The IKEC Agreement will also provide for the sale of the Indiana Project to IKEC, the payment by IKEC of the purchase price thereof in installments over a term of years and the assignment and pledge to the City Trustee by the City of its interest in and to monies (including the interest and principal components of the purchase price) receivable by the City under the IKEC Agreement. DOE and IKEC will consent to such assignment so that amounts equal to the interest and principal components of the purchase price payable by IKEC to the City will be paid by DOE directly to the City Trustee. The principal and interest components will be payable in such amounts as to enable the city to pay when due the principal and interest on the City Bonds. The IKEC Agreement also obligates IKEC to pay the fees and charges of the City Trustee, as well as certain expenses of the City.

IKEC has the option to prepay the purchase price in whole (i) upon the occurrence of certain events by paying amounts sufficient to redeem all City Bonds then outstanding and all other amounts payable under the indenture, or (ii) at any time by depositing monies in the bond fund under the indenture or delievering to the City Trustee governmental obligations sufficient in either case to provide for the release of the City indenture in accordance with its terms. Upon prepayment of the entire purchase price of the Indiana Project, IKEC may terminate the IKEC Agreement. IKEC may also prepay the purchase price in part, such payments to be paid to the City Trustee for deposit in the bond fund under the City Indenture and credited against the purchase price and used for the redemption or purchase of outstanding City Bonds in the manner and to the extent that outstanding bonds are redeemable or subject to purchase under the indenture.

IKEC will be required to prepay the purchase price of the Indiana Project and redeem all City Bonds in the event that (a) on or before November 30, 1979, neither a modification of the DOE Agreement providing for an extension of the term thereof through October 14, 1992, nor an interim arrangement for the supply of electric utility services to DOE at its existing gaseous diffusion plant near Portsmouth, Ohio through March 29, 1980, in either case including contract provisions obligating DOE to pay directly to the City Trustee all interest and principal components of the purchase price becoming due during the term of such modification or interim arrangement, shall have become effective; (b) on or before the thirty-first day prior to the date on which any such interim arrangement or any succeeding interim arrangement would otherwise terminate, neither a further interim arrangement for a period of ninety days or more, nor a modification of the DOE Agreement referred to in clause (a) above, in each case including the contract provisions referred to in clause (a) above, shall have become effective; (c) any modification of the DOE Agreement is executed which has the effect of reducing or eliminating DOE's obligation to make payments of interest and principal components of the purchase price; or (d) the DOE Agreement shall be about to terminate by action of DOE.

It is stated that IKEC will take necessary action under its mortgage and deed of trust to release the portion of the Indiana Project, to the extent constructed and in place at the plant site, from the lien of its mortgage, and, after such release, will convey the same to the City. IKEC will receive from the City Bond sale proceeds an amount equal to its original cost for the facilities so conveyed.

Under Indiana law, the interest rate to be borne by the City Bonds will be fixed by the Common Council of the City. IKEC understands that the interest on the City Bonds will not be exempt from federal income taxation. The City Bonds are expected to be dated on or about the first day of the month in which they are issued, to bear interest semiannually, to mature at a date or dates not earlier than five years subsequent to the date of their issuance and not later than October 14, 1992, and to be subject to optional and mandatory redemption under the circumstances and terms specified in the indenture. It is contemplated that the City Bonds will be sold directly by the City to an unaffiliated investment banking firm ("City Bond Buyer"), at a price of not less than 97.5% of the principal amount, and that the City Bond Buyer will contemporaneously resell them (at a price of not more than 2.5% of principal amount above its purchase price) to certain of its customers appearing on a special list of not more than 200 institutional investors, such resales being under circumstances in which counsel for IKEC and the City Bond Buyer advise that no registration of a security under the Securities Act of 1933 and no qualification of an indenture under the Trust Indenture Act of 1939 is required.

The fees and expenses to be incurred in connection with the proposed transactions will be supplied by amendment. It is stated that the Public Utilities Commission of Ohio has jurisdiction over the proposed transactions with respect to OVEC, that the Public Service Commission of Indiana has jurisdiction over the proposed transactions with respect to IKEC, and that no other state commission and no federal commission, other than this Commission, has jurisdiction thereover.

Notice is further given that any interested person may, not later than February 5, 1979, request in writing that a hearing be held on such matter, stating the nature of his interest, the reasons for such request, and the issues of fact or law raised by said application-declaration which he desires to controvert; or he may request that he be notified if the Commission should order a hearing thereon. Any such request should be addressed: Sec-

retary, Securities and Exchange Commission, Washington, D.C. 20549. A copy of such request should be served personally or by mail upon the applicants-declarants at the above-stated addresses, and proof of service (by affidavit or, in case of an attorney at law, by certificate) should be filed with the request. At any time after said date, the application-declaration, as filed or as it may be amended, may be granted and permitted to become effective as provided in Rule 23 of the general rules and regulations promulgated under the Act, or the Commission may grant exemption from such rules as provided in Rules 20(a) and 100 thereof or take such other action as it may deem appropriate. Persons who request a hearing or advice as to whether a hearing is ordered will receive any notices and orders issued in this matter, including the date of the hearing (if ordered) and any postponements thereof.

For the Commission, by the Division of Corporate Regulation, pursuant to delegated authority.

GEORGE A. FITZSIMMONS,
*Secretary.*

[FR Doc. 79-1753 Filed 1-17-79; 8:45 am]

---

[8010-01-M]

[Release No. 10552; 811-2113]

## MEMBERS' INVESTMENT FOR GROWTH FUND, LTD.

### Application for an Order Declaring That the Applicant has Ceased to be an Investment Company

JANUARY 11, 1979.

Notice is hereby given that Members' Investment For Growth Fund, Ltd, ("Applicant"), 1617 Sherman Avenue, Madison, Wisconsin 53704, registered under the Investment Company Act of 1940 ("Act") as an open-end, diversified management investment company, filed an application on November 3, 1978, and an amendment thereto on January 2, 1979, for an order of the Commission, pursuant to Section 8(f) of the Act, declaring that Applicant has ceased to be an investment company as defined in the Act. All interested persons are referred to the application on file with the Commission for a statement of the representations contained therein, which are summarized below.

Applicant, a corporation organized under the laws of the State of Maryland, registered under the Act on September 10, 1970, and concurrently filed a registration statement on Form S-5 under the Securities Act of 1933 for the public offer and sale of shares of its common stock. Applicant states that this registration statement was never declared effective, and was formally withdrawn pursuant to its request on June 19, 1978.

Applicant further states that on August 10, 1970, it issued 125,000 shares of its common stock to Michigan Credit Union Employees Pension Plan (the "Plan") in a private placement transaction, and that during the period from August 10, 1970, to February 29, 1972, Applicant issued an additional 699,915 shares of its common stock to the Plan. Applicant represents that on July 3, 1973, ICU Services Corporation, Applicant's current investment adviser, purchased all of Applicant's outstanding shares from the League Life Insurance Company, a wholly owned subsidiary of the Michigan Credit Union League which had purchased all of the shares of the Applicant held by the Plan. Applicant further represents that it has not issued any shares since July 3, 1973, except those shares resulting from the automatic reinvestment of dividends paid to Applicant's sole stockholder, ICU Services Corporation.

Applicant states that on June 30, 1978, it made an in-kind liquidating distribution to its sole stockholder, ICU Services Corporation, pursuant to a plan of liquidation adopted by Applicant's board of directors and approved by its sole stockholder.

Applicant represents that it currently has no assets, except for $100 in a checking account which will be distributed to its sole shareholder upon final dissolution of the Applicant and will not be invested in securities. Applicant further represents that it has no outstanding debts or other liabilities, is not a party to any pending litigation or administrative hearing, has ceased all business activities and does not propose to engage in any business activities other than activities necessary for the final winding up of its affairs, and that, upon approval of this application, intends to take the necessary action to formally dissolve under the laws of the State of Maryland.

Section 8(f) of the Act provides, in pertinent part, that whenever the Commission, on its own motion or upon application, finds that a registered investment company has ceased to be an investment company, it shall so declare by order and, upon the affectiveness of such order, the registration of such company shall cease to be in effect.

Notice is further given that any interested person may, not later than February 5, 1979, at 5:30 p.m., submit to the Commission in writing a request for a hearing on the application accompanied by a statement as to the nature of his interest, the reasons for such request, and the issues, if any, of fact or law proposed to be controverted, or he may request that he be notified if the Commission shall order a hearing thereon. Any such communication should be addressed: Secretary, Securities and Exchange Commission, Washington, D.C. 20549. A copy of such request shall be served personally or by mail upon Applicant at the address stated above. Proof of such service (by affidavit or, in the case of an attorney-at-law, by certificate) shall be filed contemporaneously with the request. As provided by Rule 0-5 of the rules and regulations promulgated under the Act, an order disposing of the application herein will be issued as of course following said date unless the Commission thereafter orders a hearing upon request or upon the Commission's own motion. Persons who request a hearing, or advice as to whether a hearing is ordered, will receive any notices and orders issued in this matter, including the date of the hearing (if ordered) and any postponements thereof.

For the Commission, by the Division of Investment Management, pursuant to delegated authority.

GEORGE A. FITZSIMMONS,
*Secretary.*

[FR Doc. 79-1754 Filed 1-17-79; 8:45 am]

---

[8010-01-M]

[Release No. 34-15493; File No. SR-OCC-79-1]

## OPTIONS CLEARING CORP.

### Self-Regulatory Organizations; Proposed Rule Change

Pursuant to section 19(b)(1) of the Securities Exchange Act of 1934, 15 U.S.C. 78s(b)(1), as amended by Pub. L. No. 94-29, 16 (June 4, 1975), notice is hereby given that on January 4, 1979, the above-mentioned self-regulatory organization filed with the Securities and Exchange Commission a proposed rule change as follows:

STATEMENT OF THE TERMS OF SUBSTANCE OF THE PROPOSED RULE CHANGE

The Proposed rule change would permit OCC, if it so elected, to charge to its current earnings losses otherwise required to be charged pro rata against the Clearing Fund contributions of its Clearing Members.

STATEMENT OF BASIS AND PURPOSE

The basis and purpose of the foregoing proposed rule change is as follows:

The purpose of the proposed rule change is to permit OCC to elect to charge to its current earnings losses which would otherwise be required to be charged pro rata against the Cleaning Fund contributions of its Clearing Members. In recent years, OCC has followed a practice of refunding to Clearing Members, in the form of clearing fee rebates, most of its cur-

rent earnings. The proposed rule change would permit OCC to use those earnings to discharge obligations to which its Clearing Members would otherwise be subject, instead of refunding them.

The rule change would enable OCC to absorb certain losses with its own assets, without resorting to the cumbersome mechanism of a pro rata charge.

Whether to charge a particular loss to current earnings or to the Clearing Fund would be left to the descretion of OCC, and would depend on such factors as OCC's cash position and commitments at the time of the loss.

The proposed rule change relates to the equitable allocation of reasonable charges among OCC's Clearing Members.

Comments were not and are not intended to be solicited with respect to the proposed rule change.

OCC does not believe that the proposed rule change would impose any burden on competition.

On or before February 22, 1979, or within such longer period (i) as the Commission may designate up to 90 days of such date if it finds such longer period to be appropriate and publishes its reasons for so finding or (ii) as to which the above-mentioned self-regulatory organization consents, the Commission will:

(A) By order approve such proposed rule change; or

(B) Institute proceedings to determine whether the proposed rule change should be disapproved.

Interested persons are invited to submit written data, views and arguments concerning the foregoing. Persons desiring to make written submissions should file 6 copies thereof with the Secretary of the Commission, Securities and Exchange Commission, Washington, D.C., 20549. Copies of the filing with respect to the foregoing and of all written submissions will be available for inspection and copying in the Public Reference Room, 1100 L Street, N.W., Washington, D.C. Copies of such filing will also be available for inspection and copying at the principal office of the above-mentioned self-regulatory organization. All submissions should refer to the file number referenced in the caption above and should be submitted on or before February 8, 1979.

For the Commision by the Division of Market Regulation, pursuant to delegate authority.

GEORGE A. FITZSIMMONS,
*Secretary.*

JANUARY 12, 1979.

[FR Doc. 79-1758 Filed 1-17-79; 8:45 am]

---

[8010-01-M]

[Release No. 6013; 18-24]

## RETIREMENT PLAN FOR LEGAL AND OTHER PERSONNEL OF CAHILL GORDON & REINDEL

### Filing of Application for an Order Exempting From Provisions Interests or Participations

JANUARY 10, 1979.

Notice is hereby given that Cahill Gordon & Reindel (the "Applicant" or the "Firm"), 80 Pine Street, New York, NY 10005, a law firm organized as a partnership under the laws of the State of New York, on April 25, 1978, filed an application for an exemption from the registration requirements of the Securities Act of 1933 (the "Act") for participations or interests issued in connection with its Retirement Plan for Legal and Other Personnel (the "Plan"). All interested persons are referred to that document, which is on file with the Commission, for the facts and representations contained therein, which are summarized below.

### INTRODUCTION

The Plan covers Applicant's partners and full-time salaried employees who have attained age 25 and have completed three years of service with the Firm. At September 30, 1978, 44 partners, 49 other attorneys and 61 nonlegal employees were participating.

Applicant states that the Plan is of the type commonly referred to as a "Keogh" plan which covers persons (in this case, Applicant's partners) who are "employees" within the meaning of Section 401(c)(1) of the Internal Revenue code of 1954 (the "Code") and, therefore, the exemption provided by Section 3(a)(2) of the Act is inapplicable to interests in the Plan, absent an order of the Commission issued under said Section 3(a)(2).

In relevant part, Section 3(a)(2) provides that the Commission, by rules and regulations or order, shall exempt from the provisions of Section 5 of the Act any interest or participation issued in connection with a pension or profit-sharing plan which covers employees, some or all of whom are employees within the meaning of Section 401(c)(1) of the Code, if and to the extent that the Commission determines this to be necessary or appropriate in the public interest and consistent with the protection of investors and the purposes fairly intended by the policy and provisions of the Act.

### DESCRIPTION AND ADMINISTRATION OF THE PLAN

Applicant states that the Plan was originally established effective as of January 1, 1968 and was amended most recently, effective October 1, 1976, primarily to comply with the requirements of the Employee Retirement Income Security Act of 1974 ("ERISA"). Applicant has received a determination letter from the Internal Revenue Service that the Plan, as so amended, meets the requirements for qualification under Section 401 of the Code.

Applicant contributes to the Plan for each fiscal year in respect of each participating partner that amount, if any, designated by such partner not exceeding 7% of an amount equal to the lesser of such partner's share of Firm net income for such year or $100,000, less the applicable Social Security wage base for that year. In respect of each participating employee, Applicant contributes 7% of an amount equal to the lesser of the employee's nondeferred compensation for that fiscal year or $100,000, less the applicable Social Security wage base for such year. A participant may make voluntary contributions to the Plan of up to 10% of such participant's aggregate compensation (or share of Firm income) for all years during which such person has been a participant, subject to certain limitations. The interest of each participant in the Plan is fully vested at all times.

The Plan is administered by three Trustees under an amended Trust Agreement (the "Trust Agreement") who are appointed by and serve at the pleasure of the Firm. The present Trustees are all partners of the Firm. All assets of the Plan are maintained by Marine Midland Bank. Applicant has retained Wertheim Asset Management Services Incorporated as the registered investment adviser for the Plan and Stone, Young & Co., actuaries, as employee benefit plan consultants.

The Plan provides that the trustees establish rules for the administration of the Plan, interpret its provisions and have authority over the investment of the Plan's funds. However, the investment adviser has been given authority to designate the investment securities in which Plan assets are to be invested.

Applicant states that all contributions under the Plan are paid to a single trust maintained by marine Midland Bank. Such funds are invested in two investment funds maintained solely and separately for the investment of Plan moneys. The first fund is a fixed income fund consisting of obligations issued or guaranteed by the United States or an instrumentality thereof or by a State or political subdivision thereof, bonds, notes or debentures and deposits in banks, trust companies or savings banks. The second fund is a discretionary fund consisting of such securities and other investments as the Trustees of the Plan deem proper and suitable. While the Trust Agreement allows Plan assets to be commingled in collective

funds and pooled for joint ventures into oil and gas drilling, Applicant represents that no such commingling or pooling has occurred, nor is either contemplated.

Applicant states that if the partnership were a corporation, interests and participations in the Plan would be exempt under Section 3(a)(2) of the Act. Applicant submits that merely because it is unincorporated is no reason for subjecting such interests and participations to the registration requirements of the Act. Applicant further submits that the intent of Congress in excluding from the exemption plans in which self-employed persons were participants was to prevent the sale without registration of interests in prepackaged plans offered by financial institutions to self-employed persons lacking the sophistication to protect themselves and their employees, and that the provision permitting the Commission to grant exemptions upon application included in Section 3(a)(2) of the Act makes available an exemption for partnership plans where the plan and the entity involved are comparable to corporate plans exempted by Section 3(a)(2).

Applicant also states that the Plan covers partners and employees of a single firm and is not a uniform prototype plan of a type designed to be marketed by a sponsoring financial institution or promoter to numerous unrelated self-employed persons. Applicant represents that assets of the Plan have not been and will not be commingled in any collective investment fund unless such fund has been registered under the Act.

Applicant represents that it has not distributed and does not intend to distribute any type of promotional material relating to the Plan (other than such material as Applicant is required under ERISA to distribute to participants or to employees) and has not made and does not intend to make any solicitation of voluntary contributions under the Plan.

Applicant states that it is engaged in furnishing legal services of a type which necessarily involves sophisticated and complex financial matters and, for that reason as well as the extensive administrative control over the Plan maintained by the Firm, is able to represent adequately its interests and the interests of its employees who are participants in the Plan.

Applicant concludes that for the foregoing reasons, granting the requesting exemptive order would be appropriate in the public interest, consistent with the protection of investors and the purposes fairly intended by the policy and provisions of the Act.

Notice is further given that any interested person may, not later than February 5, 1979, at 5:30 p.m., submit to the Commission in writing a request for a hearing on the application accompanied by a statement of the nature of his or her interest, the reasons for such request, and the issues, if any, of fact or law proposed to be controverted, or he or she may request to be notified if the Commission shall order a hearing thereon. Any such communication should be addressed: Secretary, Securities and Exchange Commission, Washington, D.C. 20549. A copy of such request shall be served personally or by mail upon Applicant at the address stated above. Proof of such service (by affidavit or, in the case of an attorney-at-law, by certificate) shall be filed contemporaneously with the request. An order disposing of the matter will be issued as of course following February 5, 1979, unless the Commission thereafter orders a hearing upon request or upon the Commission's own motion. Persons who request a hearing, or advice as to whether a hearing is ordered, will receive any notice or order issued in this matter, including the date of the hearing (if ordered) and any postponements thereof.

For the Commission, by the Division of Investment Management, pursuant to delegated authority.

GEORGE A. FITZSIMMONS,
*Secretary.*

[FR Doc. 79-1755 Filed 1-17-79; 8:45 am]

---

[8010-01-M]

[Rel. No. 20882; 70-6253]

## EASTERN UTILITIES ASSOCIATES

### Proposed Issuance and Sale of Notes and Request for Exemption From Competitive Bidding

JANUARY 10, 1979.

Notice is hereby given that Eastern Utilities Associates ("EUA"), P.O. Box 2333, Boston, Massachusetts 02107, a registered holding company, has filed with this Commission an application-declaration pursuant to the Public Utility Holding Company Act of 1935 ("Act"), designating Sections 6(a), 7 and 12(c) of the Act and Rules 42(b)(2) and 50 promulgated thereunder as applicable to the proposed transactions. All interested persons are referred to the application-declaration, which is summarized below, for a complete statement of the proposed transactions.

EUA proposes to issue and sell by negotiation to institutional investors $22,500,000 aggregate principal amount of unsecured notes ("New Notes"), having a maturity of up to 20 years from date of issuance. The proceeds from the sale of the New Notes will be used (i) to prepay EUA's remaining collateral trust bonds. 3⅝% Series due 1979 ("Bonds"), which are now outstanding in the principal amount of $2,437,000; (ii) to prepay EUA's serial notes ("Serial Notes"), which are held by two banks and are now outstanding in the principal amount of $20,000,000; and (iii) to add to EUA's treasury cash.

The Bonds, which mature December 1, 1979, were issued and sold pursuant to an order dated November 30, 1954 (HCAR No. 12717), in the original principal amount of $7,250,000, which amount has been reduced to $2,437,000 through the operation of a sinking fund (and purchases in anticipation of its requirements).

The Bonds are secured under an indenture and deed of trust between EUA and the First National Bank of Boston, successor trustee, by a lien on all the shares of common stock of EUA's three direct electric utility subsidiaries. The Bonds are now subject to redemption at their principal amount plus accrued interest to date of redemption, without premium.

The Serial Notes were issued and sold pursuant to an order dated September 3, 1976 (HCAR No. 19670), under separate loan agreements with The First National Bank of Boston in the principal amount of $11,500,000 ("First National Note") and the Chase Manhattan Bank in the principal amount of $8,500,000 ("Chase Note"). The First National Note bears interest at 125% of the sum of ½ of 1% plus the prime rata in effect from time to time at The First National Bank of Boston. The Chase Note bears interest at 115% of the "applicable rate" in effect at the Chase Manhattan Bank, such rate being the higher of (i) said bank's prime commercial rate or (ii) the sum of ½ of 1% plus the average rate per annum (on a discount basis and adjusted to the nearest higher ¼ of 1%) for 90 to 119 day dealer placed, prime commercial paper. EUA also pays on the Chase Note a finance fee at a rate per annum equal to 15% of the "applicable rate" together with the payments of interest.

The Serial Notes mature in semi-annual installments of $3,333,334 each commencing November 30, 1979, and ending on May 31, 1982. Each Serial Note is prepayable, in whole or in part (not less than $250,000), at any time without penalty, provided that each prepayment of one Serial Note must be accompanied by a concurrent pro rate prepayment of the other Serial Note. The loan agreements relating to the Serial Notes provide in effect that if EUA issues additional or new collateral trust bonds, it must secure the Serial Notes by pledging and delivering to each holder of the Serial Notes a principal amount of such additional or new collateral trust bonds equal to the principal amount of that holder's

Serial Notes which are to remain outstanding. In addition the loan agreement relating to the Chase Note requires that the net proceeds of any issue of common shares by EUA after November 30, 1979, be applied to pro rata prepayments of the Serial Notes.

It is stated that EUA recognizes that the authorization of the issuance and sale of the Serial Notes represented an exception to the Commission's general policy of not permitting the issuance of long-term or intermediate-term indebtedness by holding companies. EUA management believes, after discussion with representatives of Reis and Chandler, its financial advisor, that in order to achieve the most economical financing of the cash requirements of the EUA system, it is desirable for EUA to continue to have long-term indebtedness in approximately the same amount now represented by the Bonds and the Serial Notes, and that a refunding of the Bonds and Serial Notes, at or prior to the December 1, 1979, maturity of the Bonds, by the issuance of securities such as the New Notes will be the most advantageous course for EUA to take. In support of this conclusion it is noted that EUA has issued and sold common shares in each of the years 1974 through 1978, each such sale being at a price which resulted in proceeds to EUA of less than book value, resulting in a continued dilution of existing shareholders' equity, that contemplated further sales of common shares in 1979, 1980 and 1981 may also be below book value and that such sales and dilution cannot continue indefinitely without impairing the marketability of such shares. If the Serial Notes remain outstanding, the problem will be intensified because of the Chase Note loan agreement provision requiring prepayment from sales of common shares after November 30, 1979.

Management also believes that an extension of EUA's long-term debt is desirable in order to make it as nearly certain as possible that short-term loans will be available from the EUA system's bank connections as needed.

It is further stated that after discussions with representatives of Reis & Chandler and of Paine, Webber, Jackson & Curtis, Inc., EUA management also has reason to believe that there presently exists an institutional market for securities of the general character of the New Notes, which can be sold upon relatively favorable terms, particularly if the sale can be made as early as possible in 1979, and that such a sale is more likely to produce favorable terms for EUA than would a sale of bonds or notes at competitive bidding. It is thought that one of the terms of the New Notes would be a provision for sinking fund payments over a 15 year period commencing after an initial 5 year period during which refunding from proceeds of debt having a lower interest cost would be prohibited. Thus the replacement of EUA's present long-term debt with the New Notes would have the effect of spreading principal payments over a longer term, with smaller annual cash requirements. In addition, the expected interest rate on the New Notes would be lower than that of the Serial Notes, unless the prime rate falls below 8%.

EUA requests an exemption from the competitive bidding requirements of Rule 50 pursuant to Rule 50(a)(5). In support thereof, EUA states that competitive bidding for a $22,500,000 long-term debt issue would be impracticable due to (1) the size of the issue, (2) the fact that it would be a holding-company debt, and (3) the Ba rating which would be expected on such an issue. EUA also claims that while it believes that there exists an institutional market for the New Notes at this time, a delay in refinancing the Serial Notes with the New Notes could result in the disappearance of such market so that the refinancing might have to be accomplished under adverse market conditions.

The fees and expenses to be incurred in connection with the proposed transactions will be supplied by amendment. It is stated that no State commission and no Federal commission, other than this Commission, has jurisdiction over the proposed transactions.

Notice is further given that any interested person may, not later than February 7, 1979, request in writing that a hearing be held on such matter, stating the nature of his interest, the reasons for such a request, and the issues of fact or law raised by said application-declaration which he desires to controvert; or he may request that he be notified if the Commission should order a hearing thereon. Any such request should be addressed: Secretary, Securities and Exchange Commission, Washington, D.C. 20549. A copy of such request should be served personally or by mail upon the applicant-declarant at the above-stated address and proof of service (by affidavit or, in case of an attorney at law, by certificate) should be filed with the request. At any time after said date the application-declaration, as filed or as it may be amended, may be granted and permitted to become effective as provided in Rule 23 of the General Rules and Regulations promulgated under the Act, or the Commission may grant exemption from such rules as provided in Rules 20(a) and 100 thereof or take such other action as it may deem appropriate. Persons who request a hearing or advice as to whether a hearing is ordered will receive any notices and orders issued in this manner, including the date of the hearing (if ordered) and any postponements thereof.

For the Commission, by the Division of Corporate Regulation, pursuant to delegated authority.

GEORGE A. FITZSIMMONS,
*Secretary.*

[FR Doc. 79-1795 Filed 1-17-79; 8:45 am]

---

[8010-01-M]

[Rel. No. 20885; 70-6254]

## LOUISIANA POWER & LIGHT CO.

### Proposed Issuance and Sale of Preferred Stock at Competitive Bidding

JANUARY, 11, 1979.

Notice is hereby given that Louisiana Power & Light Company ("LP&L"), 142 Delaronde Street, New Orleans, Louisiana 70174, and electric utility subsidiary company of Middle South Utilities, Inc., a registered holding company, has filed a declaration with this Commission pursuant to the Public Utility Holding Company Act of 1935 ("Act"), designating Sections 6(a) and 7 of the Act and Rule 50 promulgated thereunder as applicable to the following proposed transaction. All interested persons are referred to the declaration, which is summarized below, for a complete statement of the proposed transaction.

LP&L intends to establish, by appropriate corporate action, a new series of its Preferred Stock, Cumulative, $100 par value, which shall consist of 350,000 shares ("Stock"), and to issue and sell the Stock, subject to the competitive bidding requirements of Rule 50 under the Act. The dividend rate of the Stock (which will be a multiple of 1/25th of 1%) and the price to be paid to LP&L for the Stock (which will be not less than $100 nor more than $102.75 per share) will be determined by the competitive bidding. The terms of the Stock, will include a prohibition until March 1, 1984, against refunding the Stock, directly or indirectly, with funds derived from the issuance of debt securities at a lower effective interest cost or from the issuance of other stock, which ranks prior to or on a parity with the Stock as to dividends or assets, at a lower effective dividend cost.

LP&L will apply the net proceeds derived from the issuance an sale of the Stock to the payment in part of short-term borrowings estimated to total $107,000,000 at the time the sale proceeds are received and to the financing in part of the company's construction program.

The fees, commission, and expenses incurred or to be incurred in connection with the proposed transaction total $145,000, including counsel fees

of $46,500, printing and engraving costs of $42,500, auditor's fees of $13,500 and miscellaneous expenses of $15,307. In addition, the fee of counsel for the successful bidders is estimated at $17,000, and is to be paid by the successful bidders. LP&L states that no state or federal commission, other than this Commission, has jurisdiction over the proposed transaction.

Notice is further given that any interested person may, not later that February 7, 1979, request in writing that a hearing be held on such matter, stating the nature of his interest, the reasons for such request, and the issues of fact or law raised by said declaration which he desires to controvert; or he may request that he be notified if the Commission should order a hearing thereon. Any such request should be addressed: Secretary, Securities and Exchange Commission, Washington, D.C. 20549. A copy of such request should be served personally or by mail upon the declarant at the above-stated address, and proof of service (by affidavit or, in case of an attorney at law, by certificate) should be filed with the request. At any time after said date, the declaration, as filed or as it may be amended, may be permitted to become effective as provided in Rule 23 of the General Rules and Regulations promulgated under the Act, or the Commission may grant exemptions from such rules as provided in Rules 20(a) and 100 thereof or take such other action as it may deem appropriate. Persons who request a hearing or advice as to whether a hearing is ordered will receive any notices and orders issued in this matter, including the date of the hearing (if ordered) and any postponements thereof.

For the Commission, by the Division of Corporate regulations, pursuant to delegated authority.

GEORGE A. FITZSIMMONS,
*Secretary.*

[FR Doc. 79-1796 Filed 1-17-79; 8:45 a.m.]

---

[8010-01-M]

[Rel. No. 15484; SR-MSE-78-21]

## MIDWEST STOCK EXCHANGE, INC.

### Correction of Order Approving Proposed Rule Change

JANUARY 9, 1979.

In FR Doc. 78-34215 appearing at page 57708 in the FEDERAL REGISTER of December 8, 1978, the Commission approved a proposed rule change filed by the Midwest Stock Exchange, Incorporated ("MSE"), 120 South LaSalle Street, Chicago, Illinois 60603. The proposed MSE rule change provided two additional exceptions to the rule restricting trading in out-of-the-money options. First, investors would be permitted to enter an order for out-of-the-money options provided such order would result in a spread position. Second, investors would be permitted to purchase (opening) out-of-the-money puts provided such position is offset in the account by long stock or convertible security positions. In announcing that approval, Securities Exchange Act ("SEA") Release No. 15378 (December 1, 1978) should read "Such exception would not permit an investor to initiate an opening purchase or sale in out-of-the-money options and subsequently execute the other side of the spread." In SEA Release No. 15378 the "not" was inadvertently omitted.

For the Commission by the Division of Market Regulation, pursuant to delegated authority.

GEORGE A. FITZSIMMONS,
*Secretary.*

[FR Doc. 79-1797 Filed 1-17-79; 8:45 am]

---

[4910-14-M]

## DEPARTMENT OF TRANSPORTATION

### Coast Guard

[CGD 78-185]

### PERSONAL FLOTATION DEVICE RESEARCH

#### Open Meeting

Notice is hereby given that the Coast Guard will hold a meeting to discuss a recently completed Coast Guard research report on Personal Flotation Devices (PFD's) and the future direction of Coast Guard research in the PFD area. The meeting will be held at 9:00 a.m. on 1 February 1979 at Underwriters' Laboratories, Inc., Northbrook Office, in Meeting Rooms A, B, and C of Building 6 (Main Bldg.), 333 Pfingsten Road, Northbrook, Illinois 60062.

A contract research project on the performance of inherently buoyant PFD's in comparison with inflatable PFD's has recently been completed. The report, in three volumes, is available to the public through the National Technical Information Service, Springfield, VA 22161; telephone 703-557-4650. The following ordering information is necessary.

| Title | NTIS No. | Price |
|---|---|---|
| PFD Research, Phase II, Volume I (Executive Summary). | ADA058737 | $5.25 |
| PFD Research, Phase II, Volume II (Basic Report). | ADA058738 | $15.25 |
| PFD Research, Phase II, Volume II (Appendices). | ADA058739 | $3.00 |

NOTE.—Volume III is available in microfiche only.

The Coast Guard has received requests from individual members of the PFD industry for an opportunity to present technical comments on the research report and to discuss the report. The Coast Guard has also received requests for an opportunity to discuss further research in the PFD area. This meeting has been scheduled to provide an opportunity for members of the PFD industry and the public to participate in the exchange of information. Emphasis of the discussions is expected to be on volume II of the report. It is recommended that persons wishing to attend the meeting read Volume II of the research report beforehand.

This meeting is open to the public. Seating capacity is limited. Anyone wishing to attend should contact Mr. Sam Wehr, U.S. Coast Guard Headquarters (G-MMT-3/83), Washington, D.C. 20590; telephone number 202-426-1444.

Dated: January 12, 1979.

E. A. DELANEY,
*Captain, U.S. Coast Guard,*
*Acting Chief, Office of Boating Safety.*

[FR Doc. 79-1801 Filed 1-17-79; 8:45 am]

---

[4910-14-M]

[79-004]

### SHIP STRUCTURE SUBCOMMITTEE

#### Meeting

Pursuant to section 10(a)(2) of the Federal Advisory Committee Act (Pub. L. 92-463; 5 U.S.C. App. I) notice is hereby given of a meeting of the Ship Structure Subcommittee to be held Thursday, March 1, 1979 at 9:30 A.M. in the Federal Building, 500 Camp Street, New Orleans, Louisiana. The agenda for this meeting is as follows: The current research programs of the Ship Structure Committee will be discussed and reviewed, and recommendations for future continuing research work will be developed.

Attendance is open to the interested public. With the approval of the Chairman, members of the public may present oral statements at the meeting. Persons wishing to attend and persons wishing to present oral statements should notify LCDR T. H. Robinson, USCG, Secretary, Ship Structure Committee, U.S. Coast Guard Headquarters, Washington, D.C. 20590, (202) 426-2205 not later than the day before the meeting. Any member of the public may present a

written statement to the Committee at any time.

HENRY H. BELL,
*Rear Admiral, U.S. Coast Guard, Chief, Office of Merchant Marine Safety.*

JANUARY 12, 1979.

[FR Doc. 79-1800 Filed 1-17-79; 8:45 am]

---

[4910-13-M]

Federal Aviation Administration

RADIO TECHNICAL COMMISSION FOR AERONAUTICS (RTCA), SEPARATION STUDY REVIEW GROUP

Meeting

Pursuant to section 10(a)(2) of the Federal Advisory Committee Act (Pub. L. 92-463; 5 U.S.C. App. I) notice is hereby given of a meeting of the RTCA Separation Study Review Group to be held February 13 and 14, 1979, RTCA Conference Room 261, 1717 H Street, N.W., Washington, D.C., commencing at 9:30 a.m.

The Agenda for this meeting is as follows: (1) Chairman's Introductory Remarks; (2) Approval of Minutes of Third Meeting held May 31 and June 1, 1978; (3) Status Report on FAA Separation/Navigation Standards Program; (4) Summary and Discussion of Preliminary Results of Data Collected in Cleveland Air Route Traffic Control Center; (5) Report and Discussion of Mathematical Modeling for Separation Study; (6) Report and Discussion on the Lateral Separation of Parallel Routes in Procedural Control Airspace; (7) Report and Discussion on Lateral Separation of Parallel Routes in Air Space with Active Surveillance; (8) Report on the Study of Separation Intersecting or Non-Parallel Routes; (9) Report on VOR Component Error Analysis; (10) Report on the VOR Flight Inspection for Data Collection; and (11) Other Business.

Attendance is open to the interested public but limited to space available. With the approval of the Chairman, members of the public may present oral statements at the meeting. Persons wishing to present oral statements or obtain information should contact the RTCA Secretariat, 1717 H Street, N.W., Washington, D.C. 20006; (202) 296-0484. Any member of the public may present a written statement to the committee at any time.

Issued in Washington, D.C. on January 8, 1979.

KARL F. BIERACH,
*Designated Officer.*

[FR Doc. 79-1719 Filed 1-17-79; 8:45 am]

---

[4910-13-M]

RADIO TECHNICAL COMMISSION FOR AERONAUTICS (RTCA), SPECIAL COMMITTEE 133

Meeting

Pursuant to section 10(a)(2) of the Federal Advisory Committee Act (Pub. L. 92-463); 5 U.S.C. App. 1) notice is hereby given of a meeting of the RTCA Special Committee 133 to be held February 6-8, 1979 in the RTCA Conference Room 261, 1717 "H" Street, N.W., Washington, D.C. commencing at 9:30 a.m.

The Agenda for this meeting is as follows: (1) Chairman's Remarks; (2) Approval of the Minutes of the Sixth Meeting held September 19-21, 1978; (3) ARB/RACON *ad hoc* Working Group Report; (4) Briefing on Vega Transponder Model 367X; (5) Review EUROCAE WG-3 Comments on the SC-133 MOPS and EUROCAE's Fifth Draft Minimum Performance Standards for an Airborne Radar; (6) Working Group Reports; (7) Discussion on the Weather Radar Portion of the MOPS; (8) Assignment of Tasks, and (9) Other Business.

Attendance is open to the interested public but limited to space available. With the approval of the Chairman, members of the public may present oral statements at the meeting. Persons wishing to present oral statements or obtain information should contact the RTCA Secretariat, 1717 "H" Street, N.W., Washington, D.C. 20006; (202) 296-0484. Any member of the public may present a written statement to the Committee at any time.

Issued in Washington, D.C. on January 5, 1979.

KARL F. BIERACH,
*Designated Officer.*

[FR Doc. 79-1720 Filed 1-17-79; 8:45 am]

---

[4910-06-M]

Federal Railroad Administration

[FRA Waiver Petition Docket HS-78-14]

GREAT SOUTHWEST RAILROAD CO.

Petition for Exemption From the Hours of Service Act

In accordance with 49 CFR Section 211.41 and Section 211.9, notice is hereby given that the Great Southwest Railroad (GSW) has petitioned the Federal Railroad Administration (FRA) for an exemption from the Hours of Service Act (83 Stat. 464, Pub. L. 91-169, 45 U.S.C. 64a(e)). That petition requests that the GSW be granted authority to permit certain employees to continuously remain on duty for in excess of twelve hours.

The Hours of Service Act currently makes it unlawful for a railroad to require or permit specified employees to continuously remain on duty for a period in excess of twelve hours. However, the Hours of Service Act contains a provision that permits a railroad, which employs no more than fifteen employees who are subject to the statute, to seek an exemption from this twelve hour limitation.

The GSW seeks this exemption so that it can permit certain employees to remain continuously on duty for periods not to exceed sixteen hours. The petitioner indicates that granting this exemption is in the public interest and will not adversely affect safety. Additionally, the petitioner asserts that it employs no more than fifteen employees and has demonstrated good cause for granting this exemption.

Interested persons are invited to participate in this proceeding by submitting written views or comments. FRA has not scheduled an opportunity for oral comment since the facts do not appear to warrant it. Communications concerning this proceeding should identify the Docket Number, Docket Number HS-78-14, and must be submitted in triplicate to the Docket Clerk, Office of the Chief Counsel, Federal Railroad Administration, Trans Point Building, 2100 Second Street, S.W., Washington, D.C. 20590. Communications received before February 16, 1979, will be considered by the FRA before final action is taken. Comments received after that date will be considered as far as practicable. All comments received will be available for examination both before and after the closing date for comments, during regular business hours in Room 4406, Trans Point Building, 2100 Second Street, S.W., Washington, D.C. 20590.

(Section 5 of the Hours of Service Act of 1969 (45 U.S.C. 64a), Sec. 1.49(d) of the regulations of the Office of the Secretary, 49 CFR 1.49(d).)

Issued in Washington, D.C. on January 12, 1979.

ROBERT H. WRIGHT,
*Acting Chairman, Railroad Safety Board.*

[FR Doc. 79-1792 Filed 1-17-79; 8:45 am]

---

[4910-60-M]

Materials Transportation Bureau

EXEMPTIONS OR APPLICATIONS TO BECOME A PARTY TO AN EXEMPTION

Renewal or Modification Applications

AGENCY: Materials Transportation Bureau, D.O.T.

ACTION: List of Applications for Renewal or Modification of Exemptions or Application To Become a Party to an Exemption.

SUMMARY: In accordance with the procedures governing the application for, and the processing of, exemptions from the Department of Transportation's Hazardous Materials Regulations (49 CFR Part 107, Subpart B), notice is hereby given that the Office of Hazardous Materials Regulation of the Materials Transportation Bureau has received the applications described herein. This notice is abbreviated to expedite docketing and public notice. Because the sections affected, modes of transportation, and the nature of application have been shown in earlier FEDERAL REGISTER publications, they are not repeated here. Except as otherwise noted, renewal applications are for extension of the exemption terms only. Where changes are requested (e.g. to provide for additional hazardous materials, packaging design changes, additional mode of transportation, etc.) they are described in footnotes to the application number. Application numbers with the suffix "X" denote renewal; application numbers with the suffix "P" denote party to. These applications have been separated from the new applications for exemptions to facilitate processing.

DATES: Comment period closes February 2, 1979.

ADDRESSED TO: Dockets Branch, Information Services Division, Materials Transportation Bureau, U.S. Department of Transportation, Washington, D.C. 20590. Comments should refer to the application number and be submitted in triplicate.

FOR FURTHER INFORMATION:

Copies of the applications are available for inspection in the Dockets Branch, Room 6500, Trans Point Building, 2100 Second Street, S.W., Washington, D.C.,

| Application No. | Applicant | Renewal of Exemption |
|---|---|---|
| 1479-X | Rockwell International, Canoga Park, Calif. | 1479 |
| 3330-X | Teledyne Wah Chang Albany Corp., Albany, Oreg. | 3330 |
| 4575-X | Kaiser Aluminum and Chemical Corp., Oakland, Calif. | 4575 |
| 4845-X | Graviner Limited, Slough, England. | 4845 |
| 5062-X | Dow Chemical U.S.A., Plaquemine, La. | 5062 |
| 5206-X | Monsanto Co., St. Louis, Mo. | 5206 |
| 5792-X | Chemplex Co., Rolling Meadows, Ill. | 5792 |
| 6080-X | Air Products and Chemicals, Inc., Allentown, Pa. (See Footnote 1). | 6080 |
| 6113-X | Chemplex Co., Rolling Meadows, Ill. | 6113 |
| 6215-X | E. I. du Pont de Nemours & Co., Inc., Wilmington, Del. (See Footnote 2). | 6215 |
| 6418-X | Dow Chemical Co., Midland, Mich. | 6418 |
| 6466-X | Monsanto Co., St. Louis, Mo. | 6466 |
| 6517-X | Coyne Cylinder Co., Huntsville, Ala. | 6517 |
| 6571-X | Chemplex Co., Rolling Meadows, Ill. | 6571 |
| 6614-X | FMC Corp., Philadelphia, Pa | 6614 |
| 6686-X | Chilton Metal Products Division, Chilton, Wis. (See Footnote 3). | 6686 |
| 6752-X | Pennwalt Corp., Philadelphia, Pa. (See Footnote 4). | 6752 |
| 6826-X | McDonnell Douglas Astronautics Co., Huntington Beach, Calif. | 6826 |
| 6919-X | Chemplex Co., Rolling Meadows, Ill. | 6919 |
| 6960-X | PepsiCo, Inc., Purchase, N.Y. | 6960 |
| 7005-X | Lowaco, S.A., Geneva, Switzerland. | 7005 |
| 7010-X | Great Lakes Chemical Corp., West Lafayette, Ind. (See Footnote 5). | 7010 |
| 7010-X | Great Lakes Chemical Corp., West Lafayette, Inc. (See Footnote 6). | 7010 |
| 7023-X | Hi-Pure Chemicals Inc., Nazareth, Pa. | 7023 |
| 7056-X | Diamond Shamrock Corp., Cleveland, Ohio. | 7056 |
| 7207-X | Matheson Gas Products, Lyndhurst, N.J. | 7207 |
| 7423-X | Reade Manufacturing Company, Inc., Lakehurst, N.J. | 7423 |
| 7444-X | James Russell Engineering Works, Inc., Boston, Mass. | 7444 |
| 7458-X | Ekohwerks Co., Eastlake, Ohio. | 7458 |
| 7495-X | General American Transportation Corp., Sharon, Pa. (See Footnote 7). | 7495 |
| 7603-X | Air Products and Chemicals, Inc., Allentown, Pa. | 7603 |
| 7694-X | Borg Warner Corp., Van Nuys, Calif. | 7694 |
| 7701-X | Orval Manutention, Paris, France. | 7701 |
| 7735-X | Rheem Manufacturing Co., Linden, N.J. | 7735 |
| 7830-X | Orval Manutention, Paris, France. | 7830 |
| 7870-X | Explogiochi, S.P.A., Barberino Di Mugello, Italy. | 7870 |
| 7876-X | Allied Chemical Corp., Morristown, N.J. | 7876 |
| 7942-X | Chevron U.S.A. Inc., San Francisco, Calif. | 7942 |
| 8000-X | Fauvet-Girel, Paris, France (See Footnote 8). | 8000 |
| 8118-X | Magna Corp., Houston, Tex. | 8118 |

[1]To provide for additional tube trailers with an increased volumetric capacity of approximately 60% over the current tube trailers for nitric oxide.

[2]Renewal and to delete requirement to compute the capacity of the safety relief valves on a bare tank basis, and to make editorial changes to paragraph 8j.

[3]To authorize shipment of methylacetylene-propadiene, stabilized in DOT-39 cylinders having seams formed by a brazing alloy containing not more than 60% copper.

[4]To renew and provide for additional trailer having 38 tubes instead of 30 for difluorethylene.

[5]To provide rail freight as an additional mode of transportation.

[6]To authorize bromine protable tanks to be double-stacked on-board vessel.

[7]To include sulfur dioxide as an additional commodity.

[8]To provide for certain design and volumetric capacity changes to portable tanks.

| Application Number | Applicant | Party to Exemption |
|---|---|---|
| 2787-P | Mitsubishi International Corp., New York, N.Y. | 2787 |
| 4717-P | Chemplex Co., Rolling Meadows, Ill. | 4717 |
| 6762-P | Taylor Chemicals, Inc., Baltimore, Md. (See Footnote 1). | 6762 |
| 6765-P | Jack B. Kelley, Inc. Amarillo, Tex. | 6765 |
| 7005-P | Societe Anonyme Pour L'Industrie Chimique, Mulhouse, France. | 7005 |
| 7015-P | Jack B. Kelley, Inc. Amarillo, Tex. | 7015 |
| 7060-P | Summit Airlines, Philadelphia, Pa. | 7060 |
| 7423-P | The Metals Selling Corp., Putnam, Conn. | 7423 |
| 7483-P | Compagnie Generale Maritime Paris, France. | 7483 |
| 7819-P | Societe Anonyme Pour L'Industrie Chimique, Mulhouse, France. | 7819 |
| 7924-P | Ray-O-Vac Division, Madison, Wis. | 7924 |
| 8002-P | Transcontainer Leasing, S.A., Geneva, Switzerland. | 8002 |
| 8002-P | Compagnie des Containers Reservoirs, Neuilly-sur-Seine, France. | 8002 |
| 8047-P | Compagnie des Containers Reservoirs, Neuilly-sur-Seine, France. | 8047 |

[1]To become a party to the exemption and to add strong, rigid plastic cases as authorized packaging for chemical kits.

This notice of receipt of applications for renewal of exemptions and for party to an exemption is published in accordance with Section 107 of the Hazardous Materials Transportation Act (49 CFR U.S.C. 1806; 49 CFR 1.53(e)).

Issued in Washington, D.C., on January 11, 1979.

J. R. GROTHE,
*Chief, Exemptions Branch, Office of Hazardous Materials Regulation, Materials Transportation Bureau.*

[FR Doc. 79-1613 Filed 1-18-79; 8:45 am]

[4910-60-M]

## OFFICE OF HAZARDOUS MATERIALS REGULATION

### Applications for Exemptions

AGENCY: Materials Transportation Bureau, D.O.T.

ACTION: List of Applications for Exemptions.

SUMMARY: In accordance with the procedures governing the application for, and the processing of, exemptions from the Department of Transportation's Hazardous Materials Regulations (49 CFR Part 107, Subpart B), notice is hereby given that the Office of Hazardous Materials Regulation of

the Materials Transportation Bureau has received the applications described herein.

DATES: Comment period closes February 20, 1979.

ADDRESSED TO: Dockets Branch, Information Services Division, Materials Transportation Bureau, U.S. Department of Transportation, Washington, D.C. 20590. Comments should refer to the application number and be submitted in triplicate.

FOR FURTHER INFORMATION:

Copies of the applications are available for inspection in the Dockets Branch, Room 6500, Trans Point Building, 2100 Second Street, SW., Washington, D.C.

Each mode of transportation for which a particular exemption is requested is indicated by a number in the "Nature of Application" portion of the table below as follows: 1—Motor vehicle, 2—Rail freight, 3—Cargo vessel, 4—Cargo-only aircraft, 5—Passenger-carrying aircraft.

NEW APPLICATION

| Application No. | Applicant | Regulation(s) Affected | Nature of Application |
|---|---|---|---|
| 8121-N | Republic Steel Corp., Cleveland, Ohio | 49 CFR 173.245 | To authorize shipment of compound cleaning liquid, corrosive material, in DOT Specification 57 portable tanks. (mode 1) |
| 8122-N | International Business Machines Corp., Princeton, N.J. | 49 CFR 173.263 | To authorize shipment of hydrochloric acid mixture in non-DOT specification fiberglass reinforced plastic portable tank. (mode 1) |
| 8123-N | Texas Instruments Inc., Dallas, Tex | 49 CFR Part 173 | To ship various hazardous materials in non-DOT specification plastic overpack containing multiple 1-gallon DOT Specification 2E bottles or prescribed metal containers. (mode 1) |
| 8124-N | Alloy Products Corp., Waukesha, Wis | 49 CFR 173.119, 173.245 | To manufacture, mark and sell a non-DOT specification steel drum having a 6 inch closure for the shipment of certain flammable liquids and corrosive materials. (mode 1) |
| 8125-N | Fauvet Girel, Paris, France | 49 CFR 173.315 | To authorize shipment of various liquefied gases in non-DOT specification ISO-IMCO Type 5 high pressure portable tanks. (modes 1, 2, 3) |
| 8126-N | Fauvet Girel, Paris, France | 49 CFR 173.315 | To authorize shipment of various liquefied gases in non-DOT specification ISO-IMCO Type 5 low pressure portable tanks. (modes 1, 2, 3) |
| 8127-N | Societe Nationale Des Poudres et Explosifs, Bergerac, France. | 49 CFR 173.217, 173.184 | To authorize shipment of nitrocellulose wet in non-DOT specification fiber drums similar to DOT Specification 21C. (modes 1, 3) |
| 8129-N | RAD Service Inc., Laurel, Md | 49 CFR 173.245 | To authorize shipment of certain corrosive liquids (1-pint to 1-gallon capacity) packed in bottles surrounded by absorbent material within DOT Specification 17H or 6J removable head drums for disposal. (mode 1) |
| 8130-N | Union Oil Company of California, Los Angeles, Calif. | 49 CFR 173.1080 | To authorize shipment of sulfur, dry, in specially designed freight containers. (mode 3) |
| 8131-N | National Aeronautics and Space Administration, Washington, D.C. | 49 CFR 173.34(d), 173.302(a), 173.301(d), 175.3. | To authorize the shipment of oxygen in a specially designed metal pressure vessel. (modes 1, 2, 4) |
| 8132-N | Rockwell International, Richland, Wash | 49 CFR 173.363, 173.365 | To authorize a one time shipment of beryllium compound, n.o.s. in a non-DOT specification wooden box. (mode 1) |
| 8133-N | Alpha Chemical Co, Lake Charles, La | 49 CFR 173.272(g)(25), 178.343. | To authorize shipment of corrosive liquid, n.o.s. in non-DOT specification stainless steel cargo tank trucks. (mode 1) |
| 8134-N | J. T. Baker Chemical Co., Phillipsburg, N.J | 49 CFR 173.268, 173.269 | To ship nitric acid or perchloric acid in DOT-12R packages having inside glass bottles closed with liner-less polypropylene caps. (modes 1, 2, 3) |
| 8135-N | Schlumberger Well Services, Houston, Tex | 49 CFR 173.80, 173.110, 175.320. | To authorize shipment of charged oil well jet perforating guns, Class A or C explosives by cargo-only aircraft. (mode 4) |
| 8136-N | Eastman Kodak Co., Rochester, N.Y | 49 CFR 173.245 | To authorize shipment of phosphoric acid not to exceed 85% strength in DOT Specification 57 stainless steel portable tanks. (mode 1) |
| 8137-N | Ensign Bickford Co., Simsbury, Conn | 49 CFR 173.66(b), (c) | To authorize shipment of blasting caps, Class C explosive, in a DOT Specification 12H fiberboard box without inner packaging. (mode 1) |
| 8139-N | Utility Chemical Co., Paterson, N.J | 49 CFR 173.217 | To authorize shipment of a solid oxidizer in non-DOT specification polyethylene pail placed inside a plastic bag, overpacked in a fiberboard box. (modes 1, 2, 3) |
| 8140-N | CNG Services Inc., Pittsburgh, Pa | 49 CFR 173.301(d)(2), 173.302(a)(3). | To authorize shipment of natural gas in DOT Specification 3AAX cylinders. (mode 1) |
| 8141-N | GTE Sylvania, Needham, Mass | 49 CFR 173.206(a)(1) | To authorize shipment of lithium batteries in non-DOT specification wooden box. (mode 1) |

This notice of receipt of applications for new exemptions is published in accordance with Section 107 of the Hazardous Materials Transportation Act (49 CFR U.S.C. 1806; 49 CFR 1.53(e)).

Issued in Washington, D.C., on January 11, 1979.

J. R. GROTHE,
*Chief, Exemptions Branch,*
*Office of Hazardous Materials Regulation,*
*Materials Transportation Bureau.*

[FR Doc. 79-1743 Filed 1-17-79; 8:45 am]

[7035-01]

## INTERSTATE COMMERCE COMMISSION

[Permanent Authority Decisions Volume No. 1]

### PERMANENT AUTHORITY APPLICATION

**Decision-Notice**

JANUARY 4, 1979.

The following applications are governed by Special Rule 247 of the Commission's *Rules of Practice* (49 CFR § 1100.247). These rules provide, among other things, that a protest to the granting of an application must be filed with the Commission within 30 days after the date notice of the application is published in the FEDERAL REGISTER. Failure to file a protest, within 30 days, will be considered as a waiver of opposition to the application. A protest under these rules should comply with Rule 247(e)(3) of the Rules of Practice which requires that it set forth specifically the grounds upon which it is made, contain a detailed statement of protestant's interest in the proceeding, (as specifically noted below), and shall specify with particularity the facts, matters, and things relied upon, but shall not include issues or allegations phrased generally. A protestant should include a copy of the specific portions of its authority which protestant believes to be in conflict with that sought in the application, and describe in detail the method—whether by joinder, interline, or other means—by which protestant would use such authority to provide all or part of the service proposed. Protests not in reasonable compliance with the requirements of the rules may be rejected. The original and one copy of the protest shall be filed with the Commission, and a copy shall be served concurrently upon applicant's representative, or upon applicant if no representative is named. If the protest includes a request for oral hearing, such request shall meet the requirements of section 247(e)(4) of the special rules and shall include the certification required in that section.

Section 247(f) provides, in part, that an applicant which does not intend timely to prosecute its application shall promptly request that it be dismissed, and that failure to prosecute an application under the procedures of the Commission will result in its dismissal.

Further processing steps will be by Commission notice, decision, or letter which will be served on each party of record. *Broadening amendments will not be accepted after January 18, 1979.*

Any authority granted may reflect administratively acceptable restrictive

amendments to the service proposed below. Some of the applications may have been modified to conform to the Commission's policy of simplifying grants of operating authority.

*We Find:* With the exceptions of those applications involving duly noted problems (e.g., unresolved common control, unresolved fitness questions, and jurisdictional problems) we find, preliminarily, that each common carrier applicant has demonstrated that its proposed service is required by the public convenience and necessity, and that each contract carrier applicant qualifies as a contract carrier and its proposed contract carrier service will be consistent with the public interest and the national transportation policy. Each applicant is fit, willing, and able properly to perform the service proposed and to conform to the requirements of Title 49, Subtitle IV, of the United States Code and the Commission's regulations. Except where specifically noted this decision is neither a major Federal action significantly affecting the quality of the human environment nor a major regulatory action under the Energy Policy and Conservation Act of 1975.

In those proceedings containing a statement or note that dual operations are or may be involved we find, preliminarily and in the absence of the issue being raised by a protestant, that the proposed dual operations are consistent with the public interest and the national transportation policy subject to the right of the Commission, which is expressly reserved, to impose such conditions as it finds necessary to insure that applicant's operations shall conform to the provisions of 49 U.S.C. 10930 (1978) [formerly section 210 of the Interstate Commerce Act].

In the absence of legally sufficient protests, filed within 30 days of publication of this decision-notice (or, if the application later becomes unopposed), appropriate authority will be issued to each applicant (except those with duly noted problems) upon compliance with certain requirements which will be set forth in a notification of effectiveness of this decision-notice. To the extent that the authority sought below may duplicate an applicant's existing authority, such duplication shall not be construed as conferring more than a single operating right.

Applicants must comply with all specific conditions set forth in the grant or grants of authority within 90 days after the service of the notification of the effectiveness of this decision-notice, or the application of a noncomplying applicant shall stand denied.

By the Commission, Review Board Number 1; Members Carleton, Joyce, and Jones.

H. G. HOMME, Jr.,
*Secretary.*

MC 1759 (Sub-38F), filed November 6, 1978. Applicant: FROEHLICH TRANSPORTATION CO., INC., Federal Rd., Danbury, CT 06810. Representative: Thomas W. Murrett, 342 N. Main St., West Hartford, CT 06117. To operate as a *common carrier,* by motor vehicle, in interstate or foreign commerce, over irregular routes, transporting *meat and meat products,* (except commodities in bulk), from New York, NY, to points in RI. (Hearing site: New York, NY, or Hartford, CT.)

NOTE: Purpose of application is to substitute single-line for joint-line operations.

MC 2202 (Sub-572F), filed November 6, 1978. Applicant: ROADWAY EXPRESS, INC., a Delaware corporation, P.O. Box 471, 1077 Gorge Blvd., Akron, OH 44309. Representative: William O. Turney, Suite 1010, 7101 Wisconsin Ave., Washington, DC 20014. To operate as a *common carrier,* by motor vehicle, in interstate or foreign commerce, over regular routes, transporting *general commodities* (except those of unusual value, classes A and B explosives, household goods as defined by the Commission, commodities in bulk, and those requiring special equipment), serving Neosho, MO, as an off-route point in connection with carrier's otherwise authorized regular-route operations. (Hearing site: Joplin or Springfield, MO.)

MC 3854 (Sub-45F), filed October 23, 1978. Applicant: BURTON LINES, INC., P.O. Box 11306, East Durham Station, 815 Ellis Rd., Durham, NC 27703. Representative: Edward G. Villalon, 1032 Pennsylvania Building, Pennsylvania Avenue & 13th St., NW, Washington, DC 20004. To operate as a *common carrier,* by motor vehicle, in interstate or foreign commerce, over regular routes, transporting *building materials and industrial asphalt,* from points in Carteret County, NC, to points in VA. (Hearing site: Washington, DC.)

MC 8958 (Sub-32F), filed November 27, 1978. Applicant: THE YOUNGSTOWN CARTAGE CO., An Ohio Corporation, 825 West Federal Street, P.O. Box 119, Youngstown, OH 44501. Representative: John P. McMahon, 100 East Broad Street, Columbus, OH 43215. To operate as a *common carrier,* by motor vehicle, in interstate or foreign commerce, over irregular routes, transporting *iron and steel articles,* (1) from points in CT, MA, and RI, to those points in MI on, east, and south of a line beginning at the IN-MI State line and extending along U.S. Hwy 27 to junction MI Hwy 20, then along MI Hwy 20 to the Saginaw Bay, (2) between those points in NJ on and south of Interstate Hwy 80, those points in PA on, south, and east of a line beginning at the NJ-PA State line and extending along Interstate Hwy 80 to junction U.S. Hwy 15, then along U.S. Hwy 15 to the PA-MD State line, and those points in MD on and east of U.S. Hwy 15, on the one hand, and, on the other, those points in OH on, south, and east of a line beginning at the WV-OH State line and extending along U.S. Hwy 22 to junction U.S. Hwy 23, then along U.S. Hwy 23 to the OH-KY State line, (3) between those points in PA on and west of U.S. Hwy 15, on the one hand, and, on the other, those points in OH on and south of a line beginning at the OH-WV State line and extending along U.S. Hwy 22 to junction U.S. Hwy 250, then along U.S. Hwy 250 to Dennison, OH, then along U.S. Hwy 36 to junction Interstate Hwy 77, then along Interstate Hwy 77 to junction U.S. Hwy 250, then along U.S. Hwy 250 to junction OH Hwy 21, then along OH Hwy 21 to junction U.S. Hwy 30, then along U.S. Hwy 30 to junction OH Hwy 309 (formerly U.S. Hwy 30S), then along OH Hwy 309 to junction U.S. Hwy 30, then along U.S. Hwy 30 to the OH-IN State line, (4) between points in Hancock, Brooke, Ohio, and Marshall Counties, WV, on the one hand, and, on the other, those points in OH on and south of a line beginning at the OH-WV State line and extending along U.S. Hwy 22 to junction U.S. Hwy 250, then along U.S. Hwy 250 to Dennison, OH, then along U.S. Hwy 36 to junction Interstate Hwy 77, then along Interstate Hwy 77 to junction U.S. Hwy 250, then along U.S. Hwy 250 to junction OH Hwy 21, then along OH Hwy 21 to junction Interstate Hwy 77, then along Interstate Hwy 77 to junction OH Hwy 21, then along OH Hwy 21 to junction OH Hwy 82, then along OH Hwy 82 to junction U.S. Hwy 42, then along U.S. Hwy 42 to junction U.S. Hwy 224, then along U.S. Hwy 224 to junction Interstate Hwy 75, then along Interstate Hwy 75 to junction OH Hwy 309 (formerly U.S. Hwy 30S), then along OH Hwy 309 to junction U.S. Hwy 30, then along U.S. Hwy 30 to the OH-IN State line, (5) from those points in OH on, west, and south of a line beginning at Sandusky, OH, and extending along OH Hwy 13 to junction U.S. Hwy 30, then along U.S. Hwy 30 to junction OH Hwy 21, then along OH Hwy 21 to junction Interstate Hwy 77, then along Interstate Hwy 77 to junction OH Hwy 7, then along OH Hwy 7 to junction U.S. Hwy 33, then along U.S. Hwy 33 to the OH-WV State line (except Toledo, OH), to Chicago and Belvidere, IL, those points in Lake and Porter Counties,

IN, which are on and north of U.S. Hwy 30, points in Cook, McHenry, DuPage, DeKalb, Grundy, Kane, Kendall, and Will Counties, IL, those points in LaSalle County, IL, which are within 50 miles of Oswego, IL, and points in Kenosha and Walworth Counties, WI, (6) from Chicago and Belvidere, IL, points in Kenosha and Walworth Counties, WI, those points in LaSalle County, IL, which are within 50 miles of Oswego, IL, points in Cook, McHenry, DuPage, Lake, DeKalb, Grundy, Kane, Kendall, and Will Counties, IL, and those points in Lake and Porter Counties, IN, which are on and north of U.S. Hwy 30 to (a) those points in OH on, west, and south of a line beginning at Toledo, OH, and extending along U.S. Hwy 23 to junction OH Hwy 309 (formerly U.S. Hwy 30S), then along OH Hwy 309 to junction U.S. Hwy 30, then along U.S. Hwy 30 to junction OH Hwy 21, then along OH Hwy 21 to junction Interstate Hwy 77, then along Interstate Hwy 77 to junction OH Hwy 7, then along OH Hwy 7 to junction U.S. Hwy 33, then along U.S. Hwy 33 to the OH-WV State line, and (b) those points in MI, within an area defined by a line beginning at the Saginaw Bay and extending along MI Hwy 20 to junction U.S. Hwy 27, then along U.S. Hwy 27 to junction Interstate Hwy 94, then along Interstate Hwy 94 to Detroit, then from Detroit along MI Hwy 24 to junction MI Hwy 138, then along MI Hwy 138 to junction MI Hwy 25, then along MI Hwy 25 to the Saginaw Bay at Bay Port, MI, (7) between those points in MI on, south, and east of a line beginning at Port Huron and extending along MI Hwy 21 to junction U.S. Hwy 27, then along U.S. Hwy 27 to the MI-IN State line, on the one hand, and, on the other, those points in OH on, west, and south of a line beginning at Lake Erie and extending along OH Hwy 21 to junction Interstate Hwy 77, then along Interstate Hwy 77 to junction OH Hwy 21, then along OH Hwy 21 to junction U.S. Hwy 250, then along U.S. Hwy 250 to the OH-WV State line, (8) from those points in OH on, west, and south of a line beginning at Sandusky, OH, and extending along OH Hwy 13 to junction U.S. Hwy 30, then along U.S. Hwy 30 to the OH-WV State line (except Toledo, OH), to those points in MI within an area defined by a line beginning at Port Huron, MI, and extending along MI Hwy 21 to junction U.S. Hwy 27, then along U.S. Hwy 27 to junction MI Hwy 20, then along MI Hwy 20 to the Saginaw Bay, and (9) between points in Allegheny, Washington, and Westmoreland Counties, PA, on the one hand, and, on the other, points in CT, DE, MA, NJ, NY, RI, and those in MD on and east of U.S. Hwy 15. (Hearing site: Columbus, OH.)

MC 22509 (Sub-12F), filed December 6, 1978. Applicant: MISSOURI-NEBRASKA EXPRESS, INC., an Iowa corporation, 5310 St. Joseph Ave., St. Joseph, MO 64505. Representative: Harry Ross, 58 S. Main St., Winchester, KY. 40391. To operate as a *common carrier,* by motor vehicle, in interstate or foreign commerce, over irregular routes, transporting *automobile parts, automobile supplies, automobile accessories, refrigerators, paints,* and *such commodities* as are dealt in by wholesale and retail hardware business houses, (except commodities in bulk), from Chicago, IL, to Kansas City, MO. (Hearing site: Kansas City, MO.)

NOTE: Applicant seeks to eliminate the gateway of Clarinda, IA.

MC 29079 (Sub-96F), filed October 2, 1978, previously published in the FR issue of November 9, 1978. Applicant: BRADA MILLER FREIGHT SYSTEM, INC., 1210 S. Union St., Kokomo, IN 46801. Representative: Richard H. Streeter, 1729 H Street NW, Washington, DC 20006. To operate as a *common carrier,* by motor vehicle, in interstate or foreign commerce, over irregular routes, transporting *sand and sand with additives,* (except commodities in bulk, in tank vehicles), from the facilities of Manley Brothers, at or near Troy Grove, IL, and Bridgman, MI, and the facilities of Acme Resin Company, at or near Oregon, IL, to points in CT, IL, IN (except Kokomo and points within 50 miles thereof), IA, KY (except Louisville), MA, MO, MN, NH, NJ, OH, RI, VA, WV (except points in Brooke, Hancock, Marshall, and Ohio Counties), WI, those in the Lower Peninsula of MI, those in NY on and east of U.S. Hwy 62, and those in PA on and east of U.S. Hwy 219. (Hearing site: Washington, DC.)

NOTE: This republication shows the addition of the facilities of Manley Brothers as origins and the additional destinations of IL, MN, and OH.

MC 29568 (Sub-6F), filed December 8, 1978. Applicant: ASSOCIATED TRANSFER & STORAGE COMPANY, INC., 730 North Northlake Way, Seattle, WA 98103. Representative: Susan W. Carlson, 1215 Norton Bldg., Seattle, WA 98104. To operate as a *common carrier,* by motor vehicle, in interstate or foreign commerce, over irregular routes, transporting (1) *building materials, pipe, and steel,* and (2) *commodities* which are otherwise exempt from economic regulation under 49 U.S.C. 10526(a)(6) (formerly Section 203(b)(6) of the Interstate Commerce Act) when moving in mixed loads with the commodites in (1) above, between points in WA, MT, ID, OR, WY, CA, NV, UT, CO, AZ, and NM. (Hearing site: Seattle, WA.)

MC 30844 (Sub-631F), filed October 25, 1978. Applicant: KROBLIN REFRIGERATED XPRESS, INC., P.O. Box 5000, Waterloo, IA 50704. Representative: John P. Rhodes (same address as applicant). To operate as a *common carrier,* by motor vehicle, in interstate or foreign commerce, over irregular routes, transporting *Meats, meat products and meat byproducts,* and *articles distributed by meat-packing houses,* as described in Sections A and C of Appendix 1 to the report in *Descriptions in Motor Carrier Certificates,* 61 M.C.C. 209 and 766, (except hides and commodities in bulk), from Waterloo and Columbus Junction IA, to points in TX. (Hearing site: Chicago, IL.)

MC 35831 (Sub-14F), filed November 1, 1978. Applicant: E. A. HOLDER, INC., P.O. Box 69, Kennedale, TX 76060. Representative: Billy R. Reid, P.O. Box 9093, Ft. Worth, TX 76107. To operate as a *common carrier,* by motor vehicle, in interstate or foreign commerce, over irregular routes, transporting (1) *asbestos cement pipe, couplings, and fittings,* and *accessories* used for the installation of the commodities named in (1) above, (except commodities in bulk), from the facilities of CertainTeed Corporation, at Hillsboro, TX, to points in the United States (except AK and HI). (Hearing site: Dallas or Houston, TX.)

MC 40978 (Sub-50F), filed December 4, 1978. Applicant: CHAIR CITY MOTOR EXPRESS COMPANY, a corporation, 3321 Business 141 South, Sheboygan, WI 53081. Representative: William C. Dineen, Suite 412 Empire Bldg., 710 North Plankinton Avenue, Milwaukee, WI 53203. To operate as a *common carrier,* by motor vehicle, in interstate or foreign commerce, over irregular routes, transporting (1) *powdered and granular plastic materials,* in containers and *hexamethylenetetramine,* in containers, from the facilities of Plastics Engineering Co., at Sheboygan, WI, to points in AL, AR, CT, DE, GA, IA, IL, IN, KS, KY, LA, MA, MD, MI, MN, MO, MS, NC, NE, NJ, NY, OH, OK, PA, RI, SC, TN, TX, VA, WV, and DC; and (2) *materials and supplies* used in the manufacture and distribution of the commodities in (1) above, (except commodities in bulk), in the reverse direction. (Hearing site: Milwaukee, WI.)

MC 42261 (Sub-142F), file October 27, 1978. Applicant: LANGER TRANSPORT CORP., Box 305, Jersey City, NJ 07303. Representative: W. C. Mitchell, 370 Lexington Ave., New York, NY 10017. To operate as a *common carrier,* by motor vehicle, in interstate or foreign commerce, over irregular routes, transporting (1) *containers* and *container closures,* and (2) *materials, equipment, and supplies*

used in the manufacture, distribution and sale of the commodities named in (1) above, (except commodities in bulk), between points in CT, DE, ME, MD, MA, NH, NJ, NY, OH, PA, RI, VT, VA, WV, and DC, on the one hand, and, on the other, points in FL, GA, KY, NC, SC, and TN, restricted to the transportation of traffic originating at or destined to the facilities of National Can Corporation. (Hearing site: New York, NY, or Washington, DC.)

MC 58549 (Sub-27F), filed December 12, 1978. Applicant: GENERAL MOTOR LINES, INC., P.O. Box 13727, Roanoke, VA 24034. Representative: Jerry D. Beard (same address as applicant). To operate as a *common carrier*, by motor vehicle, in interstate or foreign commerce, over irregular routes, transporting *pulpboard* (except corrugated), and *activated carbon*, (except commodities in bulk), from Covington, VA, to points in NC. (Hearing site: Roanoke, VA.)

MC 82079 (Sub-69F), filed December 7, 1978. Applicant: KELLER TRANSFER LINE, INC., 5635 Clay Ave. SW, Grand Rapids, MI 49508. Representative: Edward Malinzak, 900 Old Kent Bldg., Grand Rapids, MI 49503. To operate as a *common carrier*, by motor vehicle, in interstate or foreign commerce, over irregular routes, transporting *frozen foods*, from the facilities of Michigan, Lloyd J. Harriss Pie Company, at Saugatuck and Holland, MI, to points in IL. (Hearing site: Lansing, MI, or Chicago, IL.)

MC 83539 (Sub-513F), filed December 12, 1978. Applicant: C & H TRANSPORTATION CO., INC., P.O. Box 270535, Dallas, TX 75227. Representative: Thomas E. James (same address as applicant). To operate as a *common carrier*, by motor vehicle, in interstate or foreign commerce, over irregular routes, transporting (1) *material handling equipment, winches, compaction and road making equipment, rollers, mobile cranes*, and *highway freight trailers*, and (2) *parts, attachments and accessories* for the commodities in (1) above, between the facilities of Hyster Company, at or near Danville and Kewanee, IL, Crawfordsville, IN, and Berea, KY, on the one hand, and, on the other points in AR, ID, IA, KS, KY, LA, MS, MT, NE, NM, OK, OR, SD, TX, and WA, restricted to the transportation of traffic originating at or destined to the facilities of Hyster Company, at the named points. (Hearing site: Washington, DC, or Atlanta, GA.)

MC 100318 (Sub-3F), filed December 18, 1978. Applicant: JAMES F. MOLLENHAUER, d/b/a CITY TRANSPORT COMPANY, P.O. Box 1331, Cherry Hill, NJ 08002. Representative: Ronald Ervais, 2520 PSFS Building, 12 South 12th Street, Philadelphia, PA 19107. To operate as a *common carrier*, by motor vehicle, in interstate or foreign commerce, over irregular routes, transporting *clothing and wearing apparel*, between the facilities of Lane Bryant, Inc., at Philadelphia, PA, on the one hand, and, on the other, Trenton, NJ, Newark, DE, and points in Deptford Township (Gloucester County), NJ, restricted to the transportation of traffic originating at or destined to the above named facilities of Lane Bryant, Inc. Condition: Issuance of a certificate is subject to the coincidental cancellation, at applicant's written request, of the duplicating portions of the outstanding certificate in MC 100318 (Sub-No. 1), issued March 11, 1977. (Hearing site: Philadelphia, PA.)

MC 103051 (Sub-459F), filed November 2, 1978. Applicant: FLEET TRANSPORT COMPANY, INC., a Georgia corporation, 934—44th Ave., North, Nashville, TN 37209. Representative: Russell E. Stone, P.O. Box 90408, Nashville, TN 37209. To operate as a *common carrier*, by motor vehicle, in interstate or foreign commerce, over irregular routes, transporting *inedible tallow*, in bulk, in tank vehicles, from Bessemer, AL, to Springfield, TN. (Hearing site: Nashville, TN, or Atlanta, GA.)

MC 103798 (Sub-24F), filed December 4, 1978. Applicant: MARTEN TRANSPORT, LTD., Route 3, Mondovi, WI 54755. Representative: Robert S. Lee, 1000 First National Bank, Minneapolis, MN 55402. To operate as a *common carrier*, by motor vehicle, in interstate or foreign commerce, over irregular routes, transporting (1) *such commodities* as are dealt in by wholesale and retail food business houses, and (2) *agricultural commodities* which are otherwise exempt from economic regulation under 49 U.S.C. 10526(a)(6) [formerly Section 203(b)(6) of the Interstate Commerce Act], when moving in mixed loads with the commodities in (1) above, from points in CA and AZ to Bismarck and Fargo, ND, Green Bay and Milwaukee, WI, Hopkins, MN, Champaign, IL, Des Moines, IA, and Mitchell, SD. (Hearing site: St. Paul, MN.)

NOTE.—Dual operations may be involved in this proceeding.

MC 105269 (Sub-71F), filed December 13, 1978. Applicant: GRAFF TRUCKING COMPANY, INC., P.O. Box 986, Kalamazoo, MI 49005. Representative: Edward Malinzak, 900 Old Kent Bldg., Grand Rapids, MI 49503. To operate as a *common carrier*, by motor vehicle, in interstate or foreign commerce, over irregular routes, transporting *felt and paper insulation and sound deadening materials*, from the facilities of GAF Corporation, at or near Joliet, IL, to points in MI. (Hearing site: Lansing, MI, or Chicago, IL.)

MC 105461 (Sub-104F), filed October 30, 1978. Applicant: HERR'S MOTOR EXPRESS, INC., P.O. Box 8, Quarryville, PA 17566. Representative: Robert R. Herr (same address as applicant). To operate as a *common carrier*, by motor vehicle, in interstate or foreign commerce, over irregular routes, transporting *building materials* (except in bulk), from Manville, NJ, to points in WV and those in PA on and west of U.S. Highway 219. (Hearing site: Washington, DC, or Philadephia, PA.)

MC 105566 (Sub-174F), filed December 4, 1978. Applicant: SAM TANKSLEY TRUCKING, INC., P.O. Box 1120, Cape Girardeau, MO 63701. Representative: Thomas F. Kilroy, Suite 406, 6901 Keene Mill Rd., Springfield, VA 22150. To operate as a *common carrier*, by motor vehicle, in interstate or foreign commerce, over irregular routes, transporting *printed matter and paper stock*, (a) between Senatobia, MS, on the one hand, and, on the other, Jonesboro, AR, and Brookfield and New Berlin, WI, (b) from Phoenix, AZ, to Jonesboro, AR, Senatobia, MS, Brookfield and New Berlin, WI, and Los Angeles and San Francisco, CA, (c) from Jonesboro, AR, and Senatobia, MS, to Effingham, IL, (d) from Jonesboro, AR, Phoenix, AZ, and Senatobia, MS, to Chicago, IL, (e) from Jonesboro, AR, Phoenix, AZ, Brookfield and New Berlin, WI, and Senatobia, MS, to Denver, CO, Atlanta, GA, Indianapolis, IN, Kansas City, KS, Glasgow, KY, Boston, MA, Buffalo and New York, NY, Columbus, OH, Philadelphia and Pittsburgh, PA, Dallas, TX, and Washington, DC, and (f) from Senatobia, MS to points in AZ, CA, CO, ID, MT, NV, OR, UT, WA, and WY. (Hearing site: Chicago, IL.)

MC 106674 (Sub-348F), filed October 23, 1978. Applicant: SCHILLI MOTOR LINES, INC., P.O. Box 123, Remington, IN 47977. Representative: Jerry L. Jonson (same address as applicant). To operate as a *common carrier*, by motor vehicle, in interstate or foreign commerce, transporting: *Building materials* (except commodities in bulk), from the facilities of Bird & Son, Inc., at Chicago, IL, to points in AR, KS, KY, IN, IA, MI, MN, MO, NE, ND, OH, OK, SD, TN, and WI. (Hearing site: Chicago, IL, or Indianapolis, IN.)

MC 106674 (Sub-349F), filed October 25, 1978. Applicant: SCHILLI MOTOR LINES, INC., P.O. Box 123, Remington, IN 47977. Representative: Jerry L. Jonson (same address as applicant). To operate as a *common carrier*, by motor vehicle, in interstate or foreign commerce, over irregular routes, transporting: *Glass containers* from Char-

lotte, MI, and Streator, IL, to points in AL, AR, GA, KY, LA, and TN. (Hearing site: Chicago, IL, or Indianapolis, IN.)

NOTE.—The purpose of this application is to substitute single-line for joint-line service.

MC 106674 (Sub-350F), filed October 25, 1978. Applicant: SCHILLI MOTOR LINES, INC., P.O. Box 123, Remington, IN 47977. Representative: Jerry L. Jonson (same address as applicant). To operate as a *common carrier*, by motor vehicle, in interstate or foreign commerce, over irregular routes, transporting *Gypsum and gypsum products, and materials and supplies used in the manufacture*, and distribution of gypsum and gypsum products, from the facilities of Georgia-Pacific Corporation, at or near (1) Buchanan, NY, to points in MI, OH, and PA, and (2) Wilmington, DE, to points in KY, MD, MI, NC, OH, PA, VA, WV, TN, and DC. (Hearing site: Chicago, IL, or Indianapolis, IN.)

MC 107012 (Sub-282F), filed October 26, 1978. Applicant: NORTH AMERICAN VAN LINES, INC., 5001 U.S. Highway 30 West, P.O. Box 988, Fort Wayne, IN 46801. Representative: David D. Bishop (same address as applicant). To operate as a *common carrier*, by motor vehicle, in interstate or foreign commerce, over irregular routes, transporting (1) *Plastic and plastic articles*, between the facilities of Thompson Industries Company, at or near Phoenix, AZ, Alexandria, VA, City of Industry, CA, Des Plaines, IL, Fort Worth, TX, Higginsville, MO, Milford, NH, Monroeville and Mt. Sterling, OH, Renton, WA, Shreveport, LA, Stone Mountain, GA, and Tinton Falls, NJ, and (2) *plastic beads* (a) from Fort Worth, TX, to the facilities of Thompson Industries Company, at or near Phoenix, AZ, City of Industry, CA, and Shreveport, LA, and (b) from Kobuta, PA, to the facilities of Thompson Industries Company, at or near Phoenix, AZ, Alexandria, VA, City of Industry, CA, Des Plaines, IL, Fort Worth, TX, Higginsville, MO, Milford, NH, Monroeville and Mt. Sterling, OH, Renton, WA, Shreveport, LA, Stone Mountain, GA, and Tinton Falls, NJ. (Hearing site: Phoenix, AZ, or Chicago, IL.)

MC 107012 (Sub-288F), filed November 6, 1978. Applicant: NORTH AMERICAN VAN LINES, INC., a Delaware corporation, 5001 U.S. Highway 30 West, P.O. Box 988, Fort Wayne, IN 46801. Representative: David D. Bishop (same address as applicant). To operate as a *common carrier*, by motor vehicle, in interstate or foreign commerce, over irregular routes, transporting (1) *mist eliminators, asbestos cooling tower media, and plastic scrubbers*, from the facilities of Munters Corporation, at or near Cincinnati, OH, to points in the United States (except AK and HI), and (2) *paper* from Fulton, NY, and Norristown, PA, to the facilities of Munters Corporation, at or near Cincinnati, OH. (Hearing site: Cincinnati, OH, or Louisville, KY.)

MC 107107 (Sub-472F), filed October 23, 1978. Applicant: ALTERMAN TRANSPORT LINES, INC., 12805 N.W. 42nd Ave., Opa Locka, FL 33054. Representative: Ford W. Sewell (same address as applicant). To operate as a *common carrier*, by motor vehicle, in interstate or foreign commerce, over irregular routes, transporting *meats, meat products and meat byproducts, and articles distributed by meat-packing houses*, as described in sections A and C of Appendix I to the report in *Descriptions in Motor Carrier Certificates*, 61 M.C.C. 209 and 766, (except hides and commodities in bulk), from the facilities of John Morrell & Co., at Montgomery, AL, to those points in the United States in and east of ND, SD, NE, KS, OK, and TX, restricted to the transportation of traffic originating at the named origin. (Hearing site: Chicago, IL, or Washington, DC.)

MC 107478 (Sub-39F), filed December 7, 1978. Applicant: OLD DOMINION FREIGHT LINE, INC., 1791 Westchester Drive, P.O. Box 2006, High Point, NC 27261. Representative: Harry J. Jordan, 1000 16th Street, NW, Washington, DC 20036. To operate as a *common carrier*, by motor vehicle, in interstate or foreign commerce, over irregular routes, transporting *lumber*, between Milford, VA, on the one hand, and, on the other, points in CT, DE, IL, IN, KY, ME, MD, MA, MI, NH, NJ, NY, NC, OH, PA, RI, TN, VT, VA, WV, WI, and DC. (Hearing site: Washington, DC.)

MC 108119 (Sub-111F), filed December 12, 1978. Applicant: E. L. MURPHY TRUCKING COMPANY, a Corporation, P.O. Box 43010, St. Paul, MN 55164. Representative: Mark E. Moser (same address as applicant). To operate as a *common carrier*, by motor vehicle, in interstate or foreign commerce, over irregular routes, transporting (1) *material handling equipment, winches, compaction and road making equipment, rollers, mobile cranes*, and *highway freight trailers*, and (2) *parts, attachments and accessories* for the commodities in (1) above, between the facilities of Hyster Co., at or near Danville and Kewanee, IL, Crawfordsville, IN, and Berea, KY, on the one hand, and, on the other, points in MN, ND, SD, and WI, restricted to the transportation of traffic originating at or destined to the facilities of Hyster Co., at the above-named points. (Hearing site: Washington, DC, or Atlanta, GA.)

MC 108341 (Sub-119F), filed November 1, 1978. Applicant: MOSS TRUCKING COMPANY, INC., 3027 N. Tryon St., P.O. Box 8409, Charlotte, NC 28208. Representative: Jack F. Counts, P.O. Box 26125, Charlotte, NC 28213. To operate as a *common carrier*, by motor vehicle, in interstate or foreign commerce, over irregular routes, transporting (1) *plywood, paneling, gypsumboard, composition board*, and *molding*, and (2) *materials* used in the manufacture of the commodities named in (1) above (except commodities in bulk), between the facilities of Pan-American Gyro-Tex Company, at or near Jasper, FL, on the one hand, and, on the other, those points in the United States in and east of MN, IA, NE, CO, and NM. (Hearing site: Jacksonville, FL, or Washington, DC.)

MC 109126 (Sub-13F), filed September 12, 1978. Applicant: LA SALLE TRUCKING COMPANY, a Corporation, 690 Anita St., Chula Vista, CA 92011. Representative: Fred H. Mackensen, 9454 Wilshire Blvd., Suite 400, Beverly Hills, CA 90212. To operate as a *common carrier*, by motor vehicle, in foreign commerce only, over irregular routes, transporting *diatomaceous earth*, from Lompoc, CA, to the port of entry on the International Boundary line between the United States and the Republic of Mexico, at Tecate, CA. (Hearing site: Los Angeles, CA.)

MC 109649 (Sub-25F), filed December 12, 1978. Applicant: L. P. TRANSPORTATION, INC., Main and Cross Streets, Chester, NY 10918. Representative: Roy A. Jacobs, 550 Mamaroneck Ave., Harrison, NY 10528. To operate as a *common carrier*, by motor vehicle, in interstate or foreign commerce, over irregular routes, transporting *fuel-oil and gasoline*, in bulk, in tank vehicles, from Newark, NJ, to points in Dutchess, Orange, Sullivan and Ulster Counties, NY. (Hearing site: New York, NY.)

MC 110420 (Sub-791F), filed November 6, 1978. Applicant: QUALITY CARRIERS, INC., P.O. Box 186, Pleasant Prairie, WI 53158. Representative: E. Stephen Heisley, 805 McLachlen Bank Bldg., 666 11th St., NW, Washington, DC 20001. To operate as a *common carrier*, by motor vehicle, in interstate or foreign commerce, over irregular routes, transporting *chemicals*, in bulk, in tank vehicles, from points in the United States (except AK and HI), to Sedalia, MO. (Hearing site: Washington, DC, or Baltimore, MD.)

MC 110525 (Sub-1271F), filed December 4, 1978. Applicant: CHEMICAL LEAMAN TANK LINES, INC., a Delaware corporation, 520 East Lancaster Avenue, Downingtown, PA 19335. Representative: Thomas J. O'Brien (same address as applicant).

To operate as a *common carrier*, by motor vehicle, in interstate or foreign commerce, over irregular routes, transporting *liquid chemicals*, in bulk, in tank vehicles, from the plant site of Allied Chemical Corporation, at or near Solvay, NY, to points in OH, MI, and PA, restricted to the transportation of traffic originating at the named origin and destined to the indicated destinations. (Hearing site: New York, NY.)

MC 111545 (Sub-264F), filed December 7, 1978. Applicant: HOME TRANSPORTATION COMPANY, INC., P.O. Box 6426, Station A, Marietta, GA 30065. Representative: Robert E. Born (same address as applicant). To operate as a *common carrier*, by motor vehicle, in interstate or foreign commerce, over irregular routes, transporting (1) *trailers* designed to be drawn by passenger automobiles (except travel trailers and camping trailers), in initial movements, and (2) *buildings*, complete or in sections, mounted on wheeled undercarriages, from points in TN, VA, OK, and AR, to points in the United States (including AK, but excluding HI). (Hearing site: Nashville, TN, or Washington, DC.)

MC 111545 (Sub-265F), filed December 7, 1978. Applicant: HOME TRANSPORTATION COMPANY, INC., P.O. Box 6426, Station A, Marietta, GA 30065. Representative: Robert E. Born (same address as applicant). To operate as a *common carrier*, by motor vehicle, in interstate or foreign commerce, over irregular routes, transporting (1) *trailers* designed to be drawn by passenger automobiles (except travel trailers and camping trailers), in initial movements, and (2) *buildings*, complete or in sections, mounted on wheeled undercarriages, from points in AZ, NM, CO, NE, and KS, to points in the United States (including AK, but excluding HI). (Hearing site: San Francisco, CA, or Washington, DC.)

MC 111729 (Sub-749F), filed November 6, 1978. Applicant: PUROLATOR COURIER CORP., 333 New Hyde Park Rd., New Hyde Park, NY 11040. Representative: Elizabeth L. Henoch (same address as applicant). To operate as a *common carrier*, by motor vehicle, in interstate or foreign commerce, over irregular routes, transporting *general commodities* (except articles of unusual value, classes A and B explosives, household goods as defined by the Commission, and commodities in bulk and those requiring special equipment) between points in AZ, restricted against the transportation of articles weighing more than 50 pounds. (Hearing site: Phoenix, AZ.)

NOTE.—Dual operations may be involved in this proceeding.

MC 112801 (Sub-215F), filed October 30, 1978. Applicant: TRANSPORT SERVICE CO., a corporation, 2 Salt Creek Lane, Hinsdale, IL 60521. Representative: E. Stephen Heisley, 805 McLachlen Bank Bldg., 666 Eleventh St., NW, Washington, DC 20001. To operate as a *common carrier*, by motor vehicle, in interstate or foreign commerce, over irregular routes, transporting *liquid chemicals*, in bulk, in tank vehicles, from Bay City and Midland, MI, to points in IA and MN. (Hearing site: Washington, DC.)

MC 112989 (Sub-82F), filed November 21, 1978. Applicant: WEST COAST TRUCK LINES, INC., 85647 Highway 99 South, Eugene, OR 97405. Representative: John W. White, Jr. (same address as applicant). To operate as a *common carrier*, by motor vehicle, in interstate or foreign commerce, over irregular routes, transporting *chemicals, chemical products, petroleum products, acids, plastic articles, and rubber articles*, (except commodities in bulk), from the facilities of Rohm and Haas Company, in CA, to ponts in AZ, ID, NV, OR, UT, and WA. (Hearing site: San Francisco, CA.)

MC 113362 (Sub-340F), filed November 7, 1978. Applicant: ELLSWORTH FREIGHT LINES, INC., 310 East Broadway, Eagle Grove, IA 50533. Representative: Milton D. Adams, 1105½ Eight Avenue N.E., P.O. Box 429, Austin, MN 55912. To operate as a *common carrier*, by motor vehicle, in interstate or foreign commerce, over irregular routes, transporting *foodstuffs*, (except in bulk, in tank vehicles), in vehicles equipped with mechanical refrigeration, from the facilities of M&M/Mars, Division of Mars, Inc., at Cleveland, TN, to points in AR, CT, DE, IL, IN, IA, KS, KY, LA, ME, MD, MA, MI, MN, MS, MO, NH, NJ, NY, OH, OK, PA, RI, TX, VT, WV, and WI, restricted to the transportation of traffic orginating at the named origin and destined to the indicated destinations. (Hearing site: Pittsburgh, PA, or Washington, DC.)

MC 113459 (Sub-128F), filed December 12, 1978. Applicant: H. J. JEFFRIES TRUCK LINE, INC., P.O. Box 94850, Oklahoma City, OK 73109. Representative: James W. Hightower, 136 Wynnewood Professional Bldg., Dallas, TX 75224. To operate as a *common carrier*, by motor vehicle, in interstate or foreign commerce, over irregular routes, transporting (1) *material handling equipment, winches, compaction and road making equipment, rollers, mobile cranes*, and *highway freight trailers*, and (2) *parts, attachments and accessories* for the commodities in (1) above, between the facilities of Hyster Company, at or near Danville and Kewanee, IL, Crawfordsville, IN, and Berea, KY, on the one hand, and, on the other, points in AR, CO, KS, LA, MO, MT, NM, ND, OK, SD, TX, and WY, restricted to the transportation of traffic originating at or destined to the facilities of Hyster Company at the above-named points. CONDITION: Prior or coincidental cancellation, at applicant's written request, of its authority in MC-113459 Sub-No. 80 and the duplicating portions of its authority in MC-113459 Sub-No. 43. (Hearing site: Washington, DC, or Atlanta, GA.)

MC 113475 (Sub-30F), filed December 1, 1978. Applicant: RAWLINGS TRUCK LINE, INC., Emporia, VA 23847. Representative: Harry J. Jordan, 1000 16th Street, N.W., Washington, DC 20036. To operate as a *common carrier*, by motor vehicle, in interstate or foreign commerce, over irregular routes, transporting (1) *building materials*, and (2) *equipment and supplies* used in the manufacture, installation, and distribution of the commodities in (1) above, between the facilities of Georgia-Pacific Corporation, at Quakertown, PA, on the one hand, and, on the other, points in DE, MD, MI, NJ, NC, OH, SC, VA, and DC. (Hearing site: Washington, DC, or Richmond, VA.)

MC 113651 (Sub-293F), filed October 30, 1978. Applicant: INDIANA REFRIGERATOR LINES, INC., P.O. Box 552, Riggin Rd., Muncie, IN 47305. Representative: Glen L. Gissing (same address as applicant). To operate as a *common carrier*, by motor vehicle, over irregular routes, transporting *meats, meat products, and meat byproducts*, and *articles distributed by meat-packing houses*, as described in Sections A and C of Appendix I to the report in *Descriptions in Motor Carrier Certificates*, 61 M.C.C. 209 and 766, (except hides and commodities in bulk), from Louisville, KY, to points in CT, DE, ME, MD, MA, NY, NH, NJ, PA, RI, VT, VA, and DC, restricted to the transportation of traffic originating at the named origin and destined to the indicated destinations. (Hearing site: Dallas, TX, or Kansas City, MO.)

MC 113651 (Sub-294F), filed October 30, 1978. Applicant: INDIANA REFRIGERATOR LINES, INC., P.O. Box 552, Riggin Rd., Muncie, IN 47305. Representative: Glen L. Gissing (same address as applicant). To operate as a *common carrier*, by motor vehicle, in interstate or foreign commerce, over irregular routes, transporting *meats, meat products, and meat byproducts*, and *articles distributed by meat-packing houses*, as described in Sections A and C of Appendix I to the report in *Descriptions in Motor Carrier Certificates*, 61 M.C.C. 209 and 766, (except hides and commodities in bulk), from Albert Lea, MN, to points in AL, FL, GA, LA, MS,

NC, SC, and TN, restricted to the transportation of traffic originating at the named origin and destined to the indicated destinations. (Hearing site: Dallas, TX, or Kansas City, MO.)

MC 114274 (Sub-52F), filed October 26, 1978. Applicant: VITALIS TRUCK LINES, INC., 137 N.E. 48th St. Place, Des Moines, IA 50306. Representative: William H. Towle, 180 North LaSalle Street, Chicago, IL 60601. To operate as a *common carrier*, by motor vehicle, in interstate or foreign commerce, over irregular routes, transporting *meats, meat products, and meat byproducts*, and *articles distributed by meat-packing houses*, as described in sections A and C of Appendix I to the report in *Descriptions in Motor Carrier Certificates*, 61 M.C.C. 209 and 766, (except hides and commodities in bulk), from Schuyler, NE, to points in IA, MN, WI, and IL. CONDITION: In view of the findings in MC 114274 (Sub-38), the cerfificate issued here will be limited to in point of time to a period expiring 3 years from its date of issue, unless, prior to its expiration (but not less than 6 months prior to its expiration), applicant files a petition for permanent extension of the certificate showing that it has been in full compliance with applicable rules and regulations. (Hearing site: Omaha, NE.)

MC 114301 (Sub-97F), filed August 24, 1978, and previously noticed in the FR issue of November 9, 1978. Applicant: DELAWARE EXPRESS CO., a Corporation, P.O. Box 97, Elkton, MD 21921. Representative: MAXWELL A. HOWELL, 1100 Investment Building, 1511 K Street NW., Washington, DC 20005. To operate as a *common carrier*, by motor vehicle, in interstate or foreign commerce, over irregular routes, transporting *feed ingredients* (except liquid), from Peabody, MA, to Roaring Springs and Reading, PA. (Hearing site: Washington, DC.)

NOTE.—This republication modifies the commodity description.

MC 114552 (Sub-182F), filed October 26, 1978. Applicant: SENN TRUCKING COMPANY, a corporation, P.O. Drawer 220, Newberry, SC 29108. Representative: Robert E. Tate, P.O. Box 517, Evergreen, AL 36401. To operate as a *common carrier*, by motor vehicle, in interstate or foreign commerce, over irregular routes, transporting (1) *lumber, gypsum wallboard, poles, and posts*, and (2) *materials and supplies* used in the installation, manufacture, and distribution of the commodities in (1) above, (except commodities in bulk, in tank vehicles), between points in OK, AR, TX, LA, MS, AL, GA, FL, SC, NC, TN, KY, VA, and WV, restricted to the transportation of traffic originating at or destined to the facilities of Weyerhaeuser Company. (Hearing site: Atlanta, GA, or Washington, DC.)

MC 115162 (Sub-439F), filed October 26, 1978. Applicant: POOLE TRUCK LINE, INC., P.O. Drawer 500, Evergreen, AL 36401. Representative: Robert E. Tate (same address as applicant). To operate as a *common carrier*, by motor vehicle, in interstate or foreign commerce, over irregular routes, transporting (1) *lumber, gypsum wallboard, poles, and posts*, and (2) *materials and supplies* used in the installation, manufacture, and distribution of the commodities in (1) above, (except commodities in bulk, in tank vehicles), between points in OK, AR, TX, LA, MS, AL, GA, FL, SC, NC, TN, KY, VA, and WV, restricted to the transportation of traffic originating at or destined to the facilities used by the Weyerhaeuser Company. (Hearing site: Atlanta, GA, or Washington, DC.)

MC 115311 (Sub-319F), filed October 17, 1978. Applicant: J & M TRANSPORTATION CO., INC., P.O. Box 488, Milledgeville, GA 31061. Representative: Mark C. Ellison, P.O. Box 872, Atlanta, GA 30301. To operate as a *common carrier*, by motor vehicle, in interstate or foreign commerce, over irregular routes, transporting (1) *petroleum, petroleum products, and gasoline additives*, in containers, and (2) *such commodities* as are dealt in by distributors and suppliers of petroleum products in mixed loads with those commodities named in (1) above, (except commodities in bulk), from the facilities of Texaco, Inc., in Jefferson County, TX, to Bayonne, NJ, and points in IL, OH, IN, KY, TN, MS, AL, GA, NC, SC, MI, and FL. (Hearing site: Atlanta, GA.)

MC 115311 (Sub-322F), filed October 26, 1978. Applicant: J & M TRANSPORTATION CO., INC., P.O. Box 488, Milledgeville, GA 31061. Representative: Robert E. Tate, P.O. Box 517, Evergreen, AL 36401. To operate as a *common carrier*, by motor vehicle, over irregular routes, transporting (1) *lumber, gypsum wallboard, poles, and posts*, and (2) *materials and supplies* used in the manufacture, distribution and installation of the commodities named in (1) above, (except commodities in bulk, in tank vehicles), between points in OK, AR, TX, LA, MS, AL, GA, FL, SC, NC, TN, KY, VA, and WV, restricted to the transportation of traffic originating at or destined to the facilities of Weyerhaeuser Company. (Hearing site: Atlanta, GA, or Washington, DC.)

MC 115554 (Sub-15F), filed October 23, 1978. Applicant: Scott's Transportation Service, Inc., P.O. Box 1136, Cedar Rapids, IA 52406. Representative: Michael J. Ogborn, P.O. Box 82028, Lincoln, NE 68501. To operate as a *common carrier*, by motor vehicle, in interstate or foreign commerce, over irregular routes, transporting (1) *refrigeration, cooling, heating, and electrical equipment*, and (2) *materials and supplies* used in the manufacture, repair, and distribution of the commodities in part (1), between the facilities of McGraw-Edison Co., at or near Ripon, WI, Searcy, AR, Albion, MI, Chattanooga, TN, and Madisonville, KY, on the one hand, and, on the other, those points in the United States in and west of OH, KY, TN, GA, and FL (except AK and HI). (Hearing site: Chicago, IL.)

MC 116004 (Sub-51F), filed October 24, 1978. Applicant: TEXAS OKLAHOMA EXPRESS, INC., P.O. Box 47112, Dallas, TX 75247. Representative: Doris Hughes (Same as above). To operate as a *common carrier*, by motor vehicle, in interstate or foreign commerce, over regular routes, transporting *general commodities* (except those of unusual value, classes A and B explosives, household goods as defined by the Commission, commodities in bulk and those requiring special equipment), between Liberal, KS, and St. Louis, MO, from Liberal over U.S. Hwy 54 to junction Kansas Turnpike, then over Kansas Turnpike to junction Interstate Hwy 70, then over Interstate Hwy 70 to St. Louis, and return over the same route, serving the intermediate points of Emporia, El Dorado and Wichita, KS, restricted against the transportation of traffic moving between Kansas City and St. Louis, MO. (Hearing site: Wichita or Kansas City, MO.)

MC 116459 (Sub-78F), filed December 6, 1978. Applicant: RUSS TRANSPORT, INC., P.O. Box 4022, Chattanooga, TN 37405. Representative: Charles T. Williams (Same address as applicant). To operate as a *common carrier*, by motor vehicle, in interstate or foreign commerce, over irregular routes, transporting *salt*, in bulk, in tank vehicles, from Memphis, TN, to points in AR, MO, and MS. (Hearing site: Chattanooga, TN, or Atlanta, GA.)

MC 117589 (Sub-56F), filed December 6, 1978. Applicant: PROVISIONERS FROZEN EXPRESS, INC., 3801 7th Ave. S., Seattle, WA 98108. Representative: Michael D. Duppenthaler, 211 S. Washington St., Seattle, WA 98104. To operate as a *common carrier*, by motor vehicle, in interstate or foreign commerce, over irregular routes, transporting *meats, meat products and meat byproducts and articles distributed by meat-packing houses*, as described in Sections A and C of Appendix I to the report in *Description in Motor Carrier Certificates*, 61 M.C.C. 209 and 766, (except commodities in bulk, in tank vehicles), in vehicles equipped with mechanical refrigeration, from Seattle and Ellensburg,

WA, to points in CO and UT. (Hearing site: Seattle, WA, or Denver, CO.)

MC 111842 (Sub-193F), filed November 8, 1978. Applicant: M. BRUENGER & CO., INC., 6250 North Broadway, Wichita, KS 67219. Representative: Lester C. Arvin, 814 Century Plaza Building, Wichita, KS 67202. To operate as a *common carrier*, by motor vehicle, in interstate or foreign commerce, over irregular routes, transporting *meats, meat products and meat byproducts, and articles distributed by meat-packing houses*, as described in sections A and C of Appendix I to the report in *Descriptions in Motor Carrier Certificates*, 61 M.C.C. 209 and 766, (except hides and commodities in bulk), from the facilities of MBPXL Corporation, at or near Dodge City, KS, to points in the United States (except AK, HI, and KS), restricted to the transportation of traffic originating at the named origin. (Hearing site: Wichita, KS, or Kansas City, MO.)

NOTE.—Dual operations may be involved.

MC 118959 (Sub-188F), filed December 6, 1978. Applicant: JERRY LIPPS, INC., a Florida corporation, P.O. Drawer F, Cape Girardeau, MO 63701. Representative: Jack Gleason, (same address as applicant). To operate as a *common carrier*, by motor vehicle, in interstate or foreign commerce, over irregular routes, transporting *janitorial materials, janitorial equipment, and janitorial supplies*, (except commodities in bulk), between Cairo and Downers Grove, IL, and Lancaster, PA, on the one hand, and, on the other, points in the United States (except AK and HI). (Hearing site: Chicago, IL.)

MC 119399 (Sub- 81F), filed September 18, 1978. Applicant: CONTRACT FREIGHTERS, INC., P.O. Box 1375, Joplin, MO 64801. Representative: Wilburn L. Williamson, 280 National Foundation Life Bldg., Oklahoma City, OK 73112. To operate as a *common carrier*, by motor vehicle, in interstate or foreign commerce, over irregular routes, transporting *glass containers*, (1) from Henryetta, OK, to points in IL (except Chicago), MN, ND, SD, and WI, (2) from Sapulpa and Sand Springs, OK to Arkansas City, Wichita and Winfield, KS, Carrollville, Cudahy, Kenosha, Milwaukee, Racine, Wauwatosa, and West Allis, WI, points in AR, IL (except Chicago), LA, MS, TN, TX, and those in Johnson, Leavenworth, and Wyandotte Counties, KS, and those in Jefferson, St. Charles, St. Louis, Platte, Clay, Jackson and Cass Counties, MO, (3) from Okmulgee, OK, to points in AR, CO, IL (except Chicago), IA, LA, MN, MS, MO, ND, SD, TN, TX, WI, and those in Johnson, Leavenworth, and Wyandotte Counties, KS, (4) from Ada, OK, to points in CO, LA, MS, TN, and TX, and (5) from Muskogee, OK, to points in CO, LA, MS, and TN. (Hearing site: Tulsa, OK, or Kansas City, MO.)

MC 119399 (Sub-89F), filed December 7, 1978. Applicant: CONTRACT FREIGHTERS, INC., P.O. Box 1375, Joplin, MO 64801. Representative: Dean Williamson, 280 National Foundation Life Bldg., 3535 N.W. 58th St., Oklahoma City, OK 73112. To operate as a *common carrier*, by motor vehicle, in interstate or foreign commerce, over irregular routes, transporting *prepared feed*, (except in bulk), from Muscatine, IA, to points in IL, IN, KS, KY, MI, MN, MO, NE, OH, PA, WI, and WV. (Hearing site: Kansas City, MO.)

MC 119741 (Sub-114F), filed October 30, 1978. Applicant: GREEN FIELD TRANSPORT COMPANY, INC., 1515 Third Ave., NW., P.O. Box 1235, Fort Dodge, IA 50501. Representative: D. L. Robson (same address as applicant). To operate as a *common carrier*, by motor vehicle, in interstate or foreign commerce, transporting *meats, meat products and meat byproducts*, and *articles distributed by meat-packing houses*, as described in Sections A and C of Appendix I to the report in *Descriptions in Motor Carrier Certificates*, 61 M.C.C. 209 and 766, (except hides and commodities in bulk), from the facilities of MBPXL Corporation, at or near Dodge City, KS, to points in CT, DE, IL, IN, IA, KY, ME, MD, MA, MI, MN, MO, NE, NH, NJ, NY, ND, OH, PA, RI, SD, VT, VA, and WI, restricted to the transportation of traffic originating at the named origin. (Hearing site: Wichita, KS.)

MC 119765 (Sub-66F), filed December 7, 1978. Applicant: EIGHT WAY XPRESS, INC., a Iowa corporation, 5402 South 27th Street, Omaha, NE 68107. Representative: Arlyn L. Westergren, Suite 106, 7101 Mercy Road, Omaha, NE 68106. To operate as a *common carrier*, by motor vehicle, in interstate or foreign commerce, over irregular routes, transporting *such commodities* as are dealt in or used by grocery stores and food business houses, (except commodities in bulk in tank vehicles), from Chicago, IL, to points in CT, DE, MA, MD, MI, NY, NJ, OH, PA, VA, WV, and DC. (Hearing site: Chicago, IL, or Omaha, NE.)

MC 119777 (Sub-351F), filed September 28, 1978. Applicant: LIGON SPECIALIZED HAULER, INC., Highway 85—East, Madisonville, KY 42431. Representative: Carl U. Hurst, P.O. Drawer "L", Madisonville, KY 42431. To operate as a *common carrier*, by motor vehicle, in interstate or foreign commerce, over irregular routes, transporting *stone and stone products*, from points in Lincoln, Rio Arriba, and Santa Fe Counties, NM, Millard County, UT, and Costilla County, CO, to those points in the United States in and east of MI, WI, IA, MO, AR, and LA. (Hearing site: Albuquerque, NM.)

NOTE.—Dual operations are involved.

MC 119789 (Sub-532F), filed December 13, 1978. Applicant: CARAVAN REFRIGERATED CARGO, INC., P.O. Box 226188, Dallas, TX 75266. Representative: James K. Newbold, Jr. (same address as applicant). To operate as a *common carrier*, by motor vehicle, in interstate or foreign commerce, over regular routes, transporting *malt beverages*, from Galveston, TX, to points in LA. (Hearing site: Houston, TX.)

MC 120098 (Sub-31F), filed December 6, 1978. Applicant: UINTAH FREIGHTWAYS, A Corporation, 1030 South Redwood Road, Salt Lake City, UT 84104. Representative: Robert L. Bloomquist (same address as applicant). To operate as a *common carrier*, by motor vehicle, in interstate or foreign commerce, over irregular routes, transporting *general commodities* (except those of unusual value, classes A and B explosives, household goods as defined by the Commission, commodities in bulk, and those requiring special equipment), (1) between Vernal, UT, and Denver, CO, over U.S. Hwy 40, serving all intermediate points between Vernal UT, and Craig, CO, (2) between Baggs, WY, and Denver, CO, from Baggs over WY Hwy 79 to junction Interstate Hwy 80, then over Interstate Hwy 80 to Cheyenne, WY, then over Interstate Hwy 25 to Denver, and return over the same route, serving no intermediate points, (3) between Franklin, ID, and Salt Late City, UT: from Franklin over U.S. Hwy 91 to junction Interstate Hwy 15, then over Interstate Hwy 15 to Salt Lake City, and return over the same route, serving no intermediate points, (4) between Price, UT, and Denver, CO: from Price over U.S. Hwy 6 to Grand Junction, CO, then over U.S. Hwy 6 to Denver, and return over the same route, serving no intermediate points, and (5) between Salt Lake City, UT, and Denver, CO: from Salt Lake City over Interstate Hwy 80 to junction U.S. Hwy 30, then over U.S. Hwy 30 to Cheyenne, WY, then over Interstate Hwy 25 to Denver, and return over the same route, as an alternate route for operating convenience only, serving no intermediate points. (Hearing site: Salt Lake City, UT.)

MC 123744 (Sub-46F), filed October 5, 1978. Applicant: BUTLER TRUCKING COMPANY, a corporation, P.O. Box 88, Woodland, PA 16881. Representative: Christian V. Graf, 407 North Front Street, Harrisburg, PA 17101. To operate as a *common carrier*, by motor vehicle, over irregular routes, transporting *refractories*, from Farber, MO, to points in OH, PA, NY, NJ, MD,

WV, and KY. (Hearing site: Washington, DC.)

MC 123819 (Sub-72F), filed December 12, 1978. Applicant: ACE FREIGHT LINE, INC., P.O. Box 16589, Memphis, TN 38116. Representative: Bill R. Davis, Suite 101—Emerson Center, 2814 New Spring Road, Atlanta, GA 30339. To operate as a *common carrier*, by motor vehicle, in interstate or foreign commerce, over irregular routes, transporting *burlap and polypropylene bags*, (1) from New Orleans, LA, to points in OK and TX (except Beaumont, Port Arthur, Houston, Galveston, Corpus Christi, TX, and points in their respective commercial zones) and (2) from Nashville, GA, to points in TX. (Hearing site: New Orleans, LA.)

MC 124711 (Sub-68F), filed October 30, 1978. Applicant: BECKER CORPORATION, P.O. Box 1050, El Dorado, KS 67042. Representative: T. M. Brown, P.O. Box 1540, Edmond, OK 73-034. To operate as a *common carrier*, by motor vehicle, in interstate or foreign commerce, over irregular routes, transporting *cement*, in bulk, from the facilities of Martin Marietta Cement Company, at or near Tulsa, OK, to points in KS, MO, AR, and those points in Sherman, Hansford, Ochiltree, Lipscomb, Moore, Hutchinson, Roberts, Hemphill, Potter, Carson, Gray, Wheeler, Randall, Armstrong, Donley, Collingsworth, Childress, Hardeman, Wilbarger, and Wichita Counties, TX. (Hearing site: Tulsa, OK, or Kansas City, MO.)

MC 124821 (Sub-38F), filed October 31, 1978. Applicant: GILCHRIST TRUCKING, INC., 105 North Keyser Ave., Old Forge, PA 18518. Representative: John W. Frame, Box 626, 2207 Old Gettysburg Rd., Camp Hill, PA 17011. To operate as a *common carrier*, by motor vehicle, in interstate or foreign commerce, over irregular routes, transporting *salt*, in containers, from the facilities of Morton Salt Company, at Silver Springs, NY and Perth Amboy, NJ, to points in NY, NJ, PA, MA, CT, and RI, restricted to the transportation of traffic originating at the named origins and destined to the indicated destinations. (Hearing site: Harrisburg, PA.)

MC 125764 (Sub-9F), filed October 23, 1978. Applicant: LILAC CITY EXPRESS, INC., East 6619 Riverside, Spokane, WA 99206. Representative: Donald A. Ericson, 708 Old National Bank Building, Spokane, WA 99201. To operate as a *contract carrier*, by motor vehicle, in interstate or foreign commerce, transporting (1) *packaged foodstuffs*, (except fresh meats), from points in Los Angeles and San Bernardino Counties, CA; and (2) *paper products and frozen foods*, from points in Alameda, Sacramento, Costa, San Joaquin, Stanislaus, Butte, Solano, Santa Clara, San Francisco, Sonoma, Monterey, Merced, Fesno, Orange, Los Angeles, and San Bernardino counties, CA, to points in Spokane County, WA, under contract with U.R.M. Stores, Inc., of Spokane, WA. (Hearing site: Spokane or Seattle, WA.)

MC 126679 (Sub-9F) filed December 7, 1978. Applicant: DENNIS TRUCK LINE, INC., P.O. Box 189, Vidalia, GA 30474. Representative: Virgil H. Smith, Suite 12, 1578 Phoenix Blvd., Atlanta, GA 30349. To operate as a *common carrier*, by motor vehicle, in interstate or foreign commerce, over irregular routes, transporting *lumber*, from points in FL, to those points in GA on and north of U.S. Hwy 80. (Hearing site: Atlanta, GA.)

MC 133095 (Sub-227F), filed December 5, 1978. Applicant: TEXAS-CONTINENTAL EXPRESS, INC., P.O. Box 434, Euless, TX 76039. Representative: Arlyn L. Westergren, Suite 106, 7101 Mercy Road, Omaha, NE 68106. To operate as a *common carrier*, by motor vehicle, in interstate or foreign commerce, over irregular routes, transporting (1) *plastic articles*, and (2) *materials, equipment, and supplies* used in the manufacture and distribution of plastic articles (except commodities in bulk), between the facilities of Intercontinental Plastics Manufacturing Company, at or near Dallas, TX, on the one hand, and, on the other, points in the United States (except AK and HI). (Hearing site: Dallas, TX, or Omaha, NE.)

MC 133689 (Sub-247F), filed December 6, 1978. Applicant: OVERLAND EXPRESS, INC., 719 First St. SW, New Brighton, MN 55112. Representative: Robert P. Sack, P.O. Box 6010, West St. Paul, MN 55118. To operate as a *common carrier*, by motor vehicle, in interstate or foreign commerce, over irregular routes, transporting *such commodities* as are dealt in by drug, grocery and food business houses, (except commodities in bulk), from the facilities used by Jewel Companies, Inc., at Chicago, IL, to points in DE GA, MA, NJ, PA, and DC, restricted to the transportation of traffic originating at the named origin. (Hearing site: St. Paul, MN.)

MC 133962 (Sub-6F), filed October 26, 1978. Applicant: ALDRICH TRUCKING, INC., 3420 N.E. 9th Avenue, Ocala, FL 32670. Representative: Dan R. Schwartz, 1729 Gulf Life Tower, Jacksonville, FL 32207. To operate as a *contract carrier*, by motor vehicle, in interstate or foreign commerce, over irregular routes, transporting (1) *charcoal, charcoal briquets, vermiculite, active carbon, and hickory chips*, (2) *charcoal lighter fluid, charcoal grills, and accessories for charcoal grills*, and (3) *materials, supplies, and machinery* used in the manufacture and distribution of the commodities in (1) and (2) above, between the facilities of Husky Industries, Inc., in FL, on the one hand, and, on the other, points in the United States (except AK and HI), under contract with Husky Industries, Inc., of Atlanta, GA. (Hearing site: Jacksonville, or Tampa, FL.)

MC 134387 (Sub-59F), filed October 23, 1978. Applicant: BLACKBURN TRUCK LINES, INC., 4998 Branyon Ave., South Gate, CA 90280. Representative: Patricia M. Schnegg, 1800 United California Bank Bldg., 707 Wilshire Blvd., Los Angeles, CA 90017. To operate as a *common carrier*, by motor vehicle, in interstate or foreign commerce, over irregular routes, transporting *paper and paper products*, from Halsey, OR, to points in CA. (Hearing site: Los Angeles, CA).

MC 134755 (Sub-165F), filed December 4, 1978. Applicant: CHARTER EXPRESS, INC., P.O. Box 3772, Springfield, MO 65804. Representative: Larry D. Knox, 600 Hubbell Building, Des Moines, IA 50309. To operate as a *common carrier*, by motor vehicle, in interstate or foreign commerce, over irregular routes, transporting *frozen foods*, from the facilities of Pet Incorporated, Frozen Food Division, at Allentown and Chambersburg, PA, to points in AL, GA, LA, MS, NC, OK, SC, TN, and TX. (Hearing site: St. Louis, MO.)

NOTE.—Dual operations may be involved.

MC 135399 (Sub-12F), filed December 7, 1978. Applicant: HASKINS TRUCKING, INC., P.O. Drawer 7729, Longview, TX 75602. Representative: Paul D. Angenend, P.O. Box 2207, Austin, TX 78768. To operate as a *common carrier*, by motor vehicle, in interstate or foreign commerce, over irregular routes, transporting *paperboard boxes*, from the facilities of J. G. Clark Company, in Morrow County, OH, to points in AZ, CA, CO, NM, OK, TX, and UT. (Hearing site: Dallas, TX, or Washington, DC.)

MC 135399 (Sub-14F), filed December 11, 1978. Applicant: HASKINS TRUCKING, INC., P.O. Drawer 7729, Longview, TX 75602. Representative: Paul D. Angenend, P.O. Box 2207, Austin, TX 78768. To operate as a *common carrier*, by motor vehicle, in interstate or foreign commerce, over irregular routes, transporting *such commodities* as are dealt in by manufacturers of cleaning compounds, scouring compounds, washing compounds, and buffing compounds, from the facilities of Rochester Germicde Co., Inc., at or near Montgomery, IL, to Memphis, TN, Atlanta, GA, New Orleans, LA, Dallas, TX, Tampa, FL, San Diego, Los Angeles, and San Fran-

cisco, CA, St. Paul, MN, Des Moines, IA, St. Louis, MO and Indianapolis, IN. (Hearing site: Dallas, TX, or Washington, DC.)

MC 135598 (Sub-19F), filed December 4, 1978. Applicant: SHARKEY TRANSPORTATION, INC., P.O. Box 3156, Quincy, IL 62301. Representative: Carl L. Steiner, 39 S. LaSalle Street, Chicago, IL 60603. To operate as a *common carrier*, by motor vehicle, in interstate or foreign commerce, over irregular routes, transporting *wood store fixtures*, from Quincy, IL, to points in the United States (except AK and HI). (Hearing site: Chicago, IL.)

NOTE.—Dual operations may be involved in this proceeding.

MC 135639 (Sub-11F), filed December 1, 1978. Applicant: QUEENSWAY, INC., 105 N. Keyser Ave., Old Forge, PA 18518. Representative: John W. Frame, Box 626, Camp Hill, PA 17011. To operate as a *common carrier*, by motor vehicle, in interstate or foreign commerce, over irregular routes, transporting (1) *foodstuffs* from the facilities of Curtice-Burns, Inc., at or near Alton, Brockport, Holley, Phelps, Shortsville, Egypt, Red Creek, Waterloo, Rushville, Leicester, Le Roy, Oakfield, and South Dayton, NY, to points in FL, GA, IL, IN, MI, NC, OH, and SC, and (2) *materials and supplies* used in the manufacture and distribution of the commodities in (1) above, in the reverse direction, restricted to the transportation of traffic originating at or destined to the named facilities. (Hearing site: Harrisburg, PA.)

MC 135797 (Sub-15F), filed October 15, 1978. Applicant: J. B. HUNT TRANSPORT, INC., a Georgia corporation, P.O. Box 200, Lowell, AR 72745. Representative: Paul R. Bergant (same address as applicant). To operate as a *common carrier*, by motor vehicle, in interstate or foreign commerce, over irregular routes, transporting (1) *appliances*, and (2) *parts, accessories, and supplies* for appliances, from the facilities of the Maytag Company, at or near Newton, IA, to points in AR, LA, MS, OK, and TX. (Hearing site: Chicago, IL.)

MC 136482 (Sub-5F), filed November 8, 1978. Applicant: INDUSTRIAL ASPHALT TRANSPORT, INC., P.O. Box 5560, Statesville, NC 28677. Representative: Bill R. Davis, Suite 101—Emerson Center, 2814 New Spring Rd., Atlanta, GA 30339. To operate as a *common carrier*, by motor vehicle, in interstate or foreign commerce, over irregular routes, transporting *petroleum products*, in bulk, in tank vehicles, between points in NC and SC, restricted against the transportation of (a) asphalt, in bulk, from Moorehead City, NC, to points in SC, and (b) roofing asphalt, in bulk, in tank vehicles, from Charleston, SC, to points in NC. (Hearing site: Charlotte, NC.)

MC 136644 (Sub-5F), filed October 18, 1978. Applicant: WESTERN DRYWALL TRANSPORT, INC., 2001 Broadway, Vallejo, CA 94590. Representative: William D. Taylor, 100 Pine Street, Suite 2550, San Francisco, CA 94111. To operate as a *contract carrier*, by motor vehicle, in interstate or foreign commerce, over irregular routes, transporting *gypsum wallboard*, from the facilities of Domtar Gypsum, America, Inc., at or near Antioch, CA, to San Francisco, CA, Carson City, NV, and points in Douglas, Washoe, and Storey, Counties, NV, under contract with Domtar Gypsum America, Inc., of Oakland, CA. (Hearing site: San Francisco, CA.)

MC 136644 (Sub-6F), filed October 23, 1978. Applicant: WESTERN DRYWALL TRANSPORT, INC., 2001 Broadway, Vallejo, CA 94590. Representative: William D. Taylor, 100 Pine Street, Suite 2550, San Francisco, CA 94111. To operate as a *contract carrier*, by motor vehicle, in interstate or foreign commerce, over irregular routes, transporting: (1) *roofing and roofing materials*, from the facilities of The Flintkote Company, at or near Portland, OR, to points in CA, and (2) *gypsum wallboard*, from the facilities of The Flintkote Company, at or near Fremont, CA, to Carson City, NV, points in OR and WA, and those points in Washoe, Douglas, and Storey Counties, NV, under contract with The Flintkote Company, of Los Angeles, CA. (Hearing site: San Francisco, CA.)

MC 138438 (Sub-37F), filed December 6, 1978. Applicant: D. M. BOWMAN, INC., Route 2, Box 43A1, Williamsport, MD 21795. Representative: Edward N. Button, 1329 Pennsylvania Avenue, P.O. Box 1417, Hagerstown, MD 21740. To operate as a *common carrier*, by motor vehicle, in interstate or foreign commerce, over irregular routes, transporting *bricks*, from points in NC, SC, TN, VA, and PA (except Leesport and those in Oxford and Mount Pleasant Townships), to points in MD, PA, VA, WV, and DC. (Hearing site: Washington, DC.)

NOTE.—Dual operations may be involved in this proceeding.

MC 138469 (Sub-96F), filed December 8, 1978. Applicant: DONCO CARRIERS, INC., P.O. Box 75354, Oklahoma City, OK 73107. Representative: Stephen H. Loeb, Suite 200, 205 W. Toyhy Ave., Park Ridge, IL 60068. To operate as a *common carrier*, by motor vehicle, in interstate or foreign commerce, over irregular routes, transporting *such commodities* as are dealt in by retail variety stores, (1) from Oklahoma City, OK, to points in AL, CA, FL, GA, KS, KY, LA, MS, MO, and TX, (2) from points in MA, MN, and OH, to points in OK, and (3) from points in CA, to points in AL, FL, GA, KS, KY, LA, MS, MO, OK, and TX, restricted to the transportation of traffic originating at the named origins and destined to the indicated destinations. (Hearing site: Oklahoma City, OK.)

MC 138469 (Sub-97F), filed December 13, 1978. Applicant: DONCO CARRIERS, INC., P.O. Box 75354, Oklahoma City, OK 73107. Representative: William P. Jackson, Jr., P.O. Box 1240, Arlington, VA 22210. To operate as a *common carrier*, by motor vehicle, in interstate or foreign commerce, over irregular routes, transporting *such commodities* as are dealt in or used by wholesale and retail chain and grocery houses, (except commodities in bulk), between the facilities of Hudson Industries, Inc., at or near Troy and Brundidge, AL, on the one hand, and, on the other, points in the United States (except AK and HI). (Hearing site: Birmingham, AL.)

MC 138510 (Sub-11F), filed September 29, 1978. Applicant: RICCI TRANSPORTATION CO., INC., Odessa Avenue, Pomona, NJ 08240. Representative: J. Raymond Clark, 600 New Hampshire Ave., NW., Suite 1150, Washington, DC 20037. To operate as a *contract carrier*, by motor vehicle, in interstate or foreign commerce, over irregular routes, transporting *malt beverages*, in containers, from Columbus, OH, and Williamsburg, VA, to Pleasantville, NJ, under contract with Harrison Beverage Co., of Pleasantville, NJ. (Hearing sites: Atlantic City or Trenton, NJ.)

NOTE.—Dual operations are involved in this proceeding.

MC 138741 (Sub-59F), filed October 30, 1978. Applicant: AMERICAN CENTRAL TRANSPORT, INC., 2005 North Broadway, Joliet, IL 60435. Representative: Tom B. Kretsinger, 20 East Franklin, Liberty, MO 64068. To operate as a *common carrier*, by motor vehicle, in interstate or foreign commerce, over irregular routes, transporting *steel tubing*, from the facilities of Maverick Tube Corp., at or near Union, MO, to points in AR, IL, IN, KS, KY, MI, TN, OH, and WI. (Hearing site: St. Louis, MO.)

MC 138882 (Sub-173F), filed November 7, 1978. Applicant: WILEY SANDERS TRUCK LINES, INC., P.O. Drawer 707, Troy, AL 36081. Representative: James W. Segrest (same address as applicant). To operate as a *common carrier*, by motor vehicle, in interstate or foreign commerce, over irregular routes, transporting *canned*

*goods* (except frozen), from the facilities of Joan of Arc Co., at or near Turkey, NC, St. Francisville and Belledeau, LA, to points in IL, WI, MI, ME, NH, VT, RI, CT, MA, OH, PA, NY, and NJ. (Hearing site: Peoria, IL, or Birmingham, AL.)

MC 138941 (Sub-31F), filed October 24, 1978. Applicant: COUNTRY WIDE TRUCK SERVICE, INC., 1110 South Reservoir Street, Pomona, CA 91766. Representative: Paul M. Daniell, P.O. Box 872, Atlanta, GA 30301. To operate as a *contract carrier,* by motor vehicle, in interstate or foreign commerce, over irregular routes, transporting *(1) plastic articles,* (except commodities in bulk), and *(2) materials, equipment, and supplies* used in the manufacture and distribution of plastic articles, (except commodities in bulk), between the facilities of Mobil Chemical Company, Plastics Division, in the United States (except AK and HI), on the one hand, and, on the other, points in the United States (except AK and HI), under contract with Mobil Chemical Company, Plastics Division, of Macedon, NY. (Hearing site: Buffalo, NY.)

MC 140002 (Sub-1F), filed October 30, 1978. Applicant: EDWARD J. RING DETECTIVE AGENCY, INC., 412 Lafayette Building, 5th and Chestnut Streets, Philadelphia, PA 19102. Representative: Alan Kahn, 1920 Two Penn Center Plaza, Philadelphia, PA 19102. To operate as a *common carrier,* by motor vehicle, in interstate or foreign commerce, over irregular routes, transporting *passengers and their baggage, and valuables,* in the same vehicle with passengers, in special and charter operations, in nonscheduled door-to-door service, between Philadelphia, PA, on the one hand, and, on the other, points in Berks, Bucks, Chester, Delaware, Lehigh, Montgomery, and Northampton Counties, PA, Atlantic, Burlington, Camden, Cape May, Gloucester, Essex, Hudson, Passaic, and Union Counties, NJ, and New Castle County, DE, restricted (a) to the transportation of not more than five passengers in a vehicle, not including the driver, and (b) to a service in which the vehicles are accompanied by armed drivers or escorts. (Hearing site: Washington, DC, or Philadelphia, PA.)

MC 140024 (Sub-130F), filed October 12, 1978. Applicant: J. B. MONTGOMERY, INC., a Delaware corporation, 5565 East 52nd Avenue, Commerce City, CO 80022. Representative: Jeffrey A. Knoll (Same address as applicant). To operate as a *common carrier,* by motor vehicle, in interstate or foreign commerce, transporting *paper and paper products,* from Winslow, ME, Albany and Fort Edward, NY, and Philadelphia, PA, to points in IL, OH, IN, WI, MN, NY, PA, and MO. (Hearing site: Philadelphia, PA.)

MC 140104 (Sub-5F), filed October 23, 1978. Applicant: TOLEDO FRIGID LINES, INC., 4060 W. Fitch Road, Toledo, OH 43613. Representative: Jerry B. Sellman, 50 West Broad Street, Columbus, OH 43215. To operate as a *contract carrier,* by motor vehicle, in interstate or foreign commerce, over irregular routes, transporting (1) *ice cream, ice cream confections, ice confections, and frozen desserts,* from Toledo, OH, to points in AZ, ID, MT, NV, NM, ND, OR, SD, UT, WY, and WA; and (2) *materials, equipment, and supplies* used in the manufacture of the commodities in part (1), (except commodities in bulk), in the reverse direction under contract with Vroman Foods, Inc., of Toledo, OH. (Hearing site: Columbus, OH, or Washington, DC.)

MC 141921 (Sub-27F), filed October 26, 1978. Applicant: SAV-ON TRANSPORTATION, INC., 143 Frontage Rd., Manchester, NH 03108. Representative: John A. Sykas (same address as applicant). To operate as a *common carrier,* by motor vehicle, in interstate or foreign commerce, over irregular routes, transporting *frozen prepared foodstuffs,* from the facilities of Sara Lee, at Deerfield, IL, and New Hampton, IA, to points in CT, ME, MA, MD, NH, NJ, VT, RI, PA, NY, DE, VA, and DC, restricted to the transportation of traffic originating at the named origin and destined to the indicated destinations (except traffic moving in foreign commerce). (Hearing site: Chicago, IL, or Boston, MA.)

NOTE.—Dual operations may be involved.

MC 142059 (Sub-56F), filed December 11, 1978. Applicant: CARDINAL TRANSPORT, INC., 1830 Mound Rd., Joliet, IL 60436. Representative: Jack Riley (same address as applicant). To operate as a *common carrier,* by motor vehicle, in interstate or foreign commerce, over irregular routes, transporting *aluminum articles,* from the facilities of Kaiser Aluminum and Chemical Corporation, at or near Ravenswood, WV, to points in AL, AR, CT, DE, FL, GA, IL, IN, IA, KY, LA, ME, MD, MA, MI, MN, MS, MO, NH, NJ, NY, NC, OH, PA, RI, SC, TN, TX, VT, VA, WV, WI, and DC. (Hearing site: Washington, DC.)

MC 142254 (Sub-3F), filed October 23, 1978. Applicant: FRIEDL FUEL & CARTAGE, INC., 417 W. Whitewater St., Whitewater, WI 53190. Representative: Wayne W. Wilson, 150 E. Gilman St., Madison, WI 53703. To operate as a *common carrier,* by motor vehicle, in interstate or foreign commerce, over irregular routes, transporting (1) *concrete products* and *accessories* for use in the distribution or installation of concrete products, from Whitewater, WI, to points in AR, IL, IN, IA, KS, KY, MI, MN, MO, NE, ND, OH, OK, SD, and TN; (2) *materials, equipment and supplies* used in the manufacture, distribution, or installation of the commodities in part (1) (except commodities in bulk, in tank vehicles), in the reverse direction; (3) *washing, cleaning, buffing, and polishing compounds* (except commodities in bulk), from Milton, WI, to points in IL, IN, IA, MI, MN, MO, OH, NY, NJ, MD, CA, FL, GA, CT, PA, and DC; and (4) *materials, equipment, and supplies* used in the manufacture or distribution of the commodities in part (3) (except commodities in bulk), in the reverse direction. (Hearing site: Milwaukee or Madison, WI.)

MC 142559 (Sub-70F), filed December 4, 1978. Applicant: BROOKS TRANSPORTATION, INC., 3830 Kelley Ave., Cleveland, OH 44114. Representative: John P. McMahon, 100 E. Broad St., Columbus, OH 43215. To operate as a *common carrier,* by motor vehicle, in interstate or foreign commerce, over irregular routes, transporting *bicycles, bicycle parts, and bicycle accessories,* (except commodities in bulk), between Boston and Westwood, MA, Secaucus, NJ, Miami, FL, Bensenville, IL, New Orleans, LA, Long Beach, CA, Houston, TX, and Buffalo, NY, on the one hand, and, on the other, points in the United States (except AK and HI). (Hearing site: Columbus, OH.)

NOTE.—Dual operations may be involved in this proceeding.

MC 142559 (Sub-71F), filed November 30, 1978. Applicant: BROOKS TRANSPORTATION, INC., 3830 Kelley Ave., Cleveland, OH 44114. Representative: John P. McMahon, 100 E. Broad St., Columbus, OH 43215. To operate as a *common carrier,* by motor vehicle, in interstate or foreign commerce, over irregular routes, transporting (1) *Gas and electric appliances,* and (2) *materials, equipment, and supplies* used in the manufacture, distribution, and repair of the commodities in (1) above, from the facilities of Whirlpool Corporation, at Evansville, IN, to points in AL, FL, GA, MD, NJ, NY, NC, PA, SC, TN, VA, and WV. (Hearing site: Columbus, OH, or Washington, DC.)

NOTE.—Dual operations may be involved in this proceeding.

MC 142559 (Sub-72F), filed December 11, 1978. Applicant: BROOKS TRANSPORTATION, INC., 3830 Kelley Ave., Cleveland, OH 44114. Representative: John P. McMahon, 100 E. Broad St., Columbus, OH 43215. To operate as a *common carrier,* by motor vehicle, in interstate or foreign commerce, over irregular routes, transporting *automotive accessories,* and

*materials, equipment and supplies* used in the manufacture and distribution of automotive accessories (except commodities in bulk), between Boston, MA, on the one hand, and, on the other, points in the United States (except AK and HI). (Hearing site: Columbus, OH.)

NOTE.—Dual operations may be involved in this proceeding.

MC 142559 (Sub-73F), filed December 11, 1978. Applicant: BROOKS TRANSPORTATION, INC., 3830 Kelley Ave., Cleveland, OH 44114. Representative: John P. McMahon, 100 E. Broad St., Columbus, OH 43215. To operate as a *common carrier*, by motor vehicle, in interstate or foreign commerce, over irregular routes, transporting *television picture tubes*, and *materials, equipment and supplies* used in the manufacture of television picture tubes (except commodities in bulk), from Scranton, PA, to Chicago, IL. (Hearing site: Columbus, OH.)

NOTE.—Dual operations may be involved in this proceeding.

MC 143154 (Sub-4F), filed October 23, 1978. Applicant: Arthur E. Pamin, Jr., and Steven V. Bidlake, a partnership, d.b.a. A & S Trucking, 6450 Highway 10 West, Missoula, MT 59801. Representative: Charles A. Murray, Jr., 207A Behner Building, 2822 Third Avenue North, Billings, MT 59101. To operate as a *common carrier*, by motor vehicle, in interstate or foreign commerce, over irregular routes, transporting *pencil slats, boxes, paper, packaging materials, and materials* used in the manufacture of pencil slats, between points in ID, MT, and CA. (Hearing site: Billings or Missoula, MT.)

MC 143159 (Sub-3F), filed November 27, 1978. Applicant: BRICK HAULERS, INC., Route 1 Box 407, Forest City, NC 28043. Representative: George W. Clapp, P.O. Box 836, Taylors, SC 29687. To operate as a *contract carrier*, by motor vehicle, in interstate or foreign commerce, transporting (1) *brick*, from Augusta, GA, Blacksburg, Columbia, Gaffney, Ninety-Six, and Van Wyck, SC, and Elizabethton, Johnson City, and Kingsport, TN, (2) *cement and mortar mix*, from Cayce, SC, (3) *concrete block*, from Spartanburg, SC, (4) *sand*, in bulk, in dump vehicles, from Dixiana and Pageland, SC, and (5) *terracotta pipe and flue lining*, from Milledgeville, GA, in (1) through (5) above, to points in NC, under contract with Clyde H. Robbins Brick & Concrete Products, Inc., of Forest City, NC. (Hearing site: Charlotte, NC.)

MC 143239 (Sub-3F), filed November 20, 1978. Applicant: JAMOUR, INC., doing business as QUICK METROPOLITAN SERVICES, 123 N. 23rd St., Philadelphia, PA 19121. Representative: Alan Kahn, Two Penn Center Plaza, Philadelphia, PA 19102. To operate as a *common carrier*, by motor vehicle, in interstate or foreign commerce, over irregular routes, transporting *general commodities* (except those of unusual value and classes A and B explosives), limited to packages not exceeding 50 pounds in weight and total shipments not exceeding 200 pounds, (1) between Philadephia, PA, and Lancaster, PA, restricted to the transportation of traffic moving in the small package express service of the scheduled airlines or the express mail service of the scheduled airlines or the express mail service of the United States Postal Service, and (2) between Lancaster, PA, on the one hand, and, on the other, points in New Castle County, DE. (Hearing site: Washington, DC or Philadelphia, PA.)

MC 143511 (Sub-3F), filed October 25, 1978. Applicant: HARDINGER TRANSFER CO., INC., P.O. Box 521, Erie, PA 16512. Representative: Paul F. Sullivan, 711 Washington, Blvd., Washington, DC 20005. To operate as a *common carrier*, by motor vehicle, in interstate or foreign commerce, over irregular routes, transporting *scrap metals* (except in dump vehicles), from Erie, PA, to points in OH, IL, IN, and MI. (Hearing site: Pittsburgh, PA, or Washington, DC.)

MC 143687 (Sub-7F), filed October 23, 1978. Applicant: DAVID DALE TRANSPORT, INC., 2 Franklin Street, West Medway, MA 02053. Representative: Wesley S. Chused, 15 Court Square, Boston, MA 02108. To operate as a *contract carrier*, by motor vehicle, in interstate or foreign commerce, transporting (1) *plastic articles* (except commodities in bulk), and (2) *materials, equipment, and supplies* used in the manufacture and distribution of plastic articles, (except commodities in bulk), between the facilities of Mobil Chemical Company, Plastics Division, in the United States (except AK and HI), on the one hand, and, on the other, points in the United States (except AK and HI), under contract with Mobil Chemical Company, Plastics Division, of Macedon, NY. (Hearing site: Washington, DC, or Buffalo, NY.)

MC 143699 (Sub-2F), filed December 4, 1978. Applicant: QUALITY CONTRACT CARRIER, INC., 1009 W. Edgewood Ave., Indianapolis, IN 46217. Representative: Donald W. Smith, P.O. Box 40659, Indianapolis, IN 46240. To operate as a *contract carrier*, by motor vehicle, in interstate or foreign commerce, over irregular routes, transporting *plastic resins and plastic sheets*, in containers, from the facilities of General Electric Company, at (1) Mt. Vernon and Evansville, IN, to points in IL, KS, MI, NE, UT (except Salt Lake City), and WI, and (2) Evansville, IN, to Phoenix, AZ, Boulder and Fort Collins, CO, Albuquerque, NM, Salt Lake City, UT, and points in CA, OR, and WA, under contract in (1) and (2) above, with General Electric Company, of Mount Vernon, IN. (Hearing site: Indianapolis, IN.)

MC 144069 (Sub-5F), filed December 8, 1978. Applicant: FREIGHTWAYS, INC., P.O. BOX 5204, Charlotte, NC 28225. Representative: Ralph McDonald, P.O. Box 2246, Raleigh, NC 27602. To operate as a *common carrier*, by motor vehicle, in interstate or foreign commerce, over irregular routes, transporting *iron and steel articles* (1) between the facilities of Florida Steel Corporation, at Charlotte and Raleigh, NC and Aiken, SC, on the one hand, and, on the other, points in AL, GA, KY, NC, SC, TN, VA, and WV, and (2) between the facilities of Republic Steel Corporation, at or near Charlotte, NC, Bristol, TN, and Seneca, SC, on the one hand, and, on the other, points in AL, GA, KY, NC, SC, TN, VA, and WV. (Hearing site: Charlotte, NC.)

MC 144355 (Sub-1F), filed December 8, 1978. Applicant: MANKE BROTHERS TRUCK LINES, a corporation, 2550 Boynton Lane, Reno, NV 89502. Representative: Charles H. McCrea, Jr., One East First Street, Suite 900, Reno, NV 89501. To operate as a *contract carrier*, by motor vehicle, in interstate or foreign commerce, over irregular routes, transporting *iron and steel articles, and building materials*, as described in Appendices V and VI to the report in Descriptions in Motor Carrier Certificates 61 M.C.C. 209, (1) from points in CA, to points in NV (except those in Clark, Nye, Esmeralda, and Lincoln Counties), and (2) from Washoe County, NV, to points in CA, under contract with Western Nevada Supply, of Sparks, NV, Tholl Fence Company Inc., of Sparks, NV, Sierra Supply Inc., of Sparks, NV, Hydro Conduitt Corporation, of Sparks, NV, and L & L Roofing Company, of Reno, NV. (Hearing site: Reno or Carson City, NV.)

MC 144498 (Sub-1F), filed December 7, 1978. Applicant: HIX TRANSPORT, INC., 4129 N. 500 E., Van Buren, IN 46991. Representative: Robert W. Loser, 1009 Chamber of Commerce Building, Indianapolis, IN 46204. To operate as a *contract carrier*, by motor vehicle, in interstate or foreign commerce, over irregular routes, transporting *such commodities* as are dealt in or used by grocery and food business houses (except commodities in bulk), in vehicles equipped with mechanical refrigeration, between the facilities of The Kroger Company, at

Columbus and Cincinnati, OH, on the one hand, and, on the other, Nashville and Memphis, TN, Little Rock, AR, and Dallas and Houston, TX, under contract with The Kroger Company, of Cincinnati, OH. (Hearing site: Indianapolis, IN, or Cincinnati, OH.)

MC 144572 (Sub-5F), filed November 6, 1978. Applicant: MONFORT TRANSPORTATION COMPANY, a corporation, P.O. Box G, Greeley, CO 80631. Representative: John T. Wirth, 717 17th Street, Suite 2600, Denver, CO 80202. To operate as a *common carrier*, by motor vehicle, in interstate or foreign commerce, over irregular routes, transporting (1) *paper and paper products*, from the facilities of Champion International Corporation, at or near Cincinnati and Hamilton, OH, to points in AR, CO, IA, KS, MN, MO, NE, and OK, and (2) *materials, equipment, and supplies* used in the manufacture and distribution of paper and paper products, (except commodities in bulk), in the reverse direction. (Hearing site: Cincinnati, OH.)

NOTE.—Dual operations may be involved.

MC 144745 (Sub-1F), filed December 6, 1978. Applicant: W & D EXPRESS, INC., 295-305 Northern Avenue, Boston, MA 02210. Representative: Frank J. Weiner, 15 Court Square, Boston, MA 02108. To operate as a *contract carrier*, by motor vehicle, in interstate or foreign commerce, over irregular routes, transporting (1) *frozen bakery products, frozen onion rings*, and (2) *commodities* otherwise exempt from economic regulation under 49 USC 3 10526(a)(6) (formerly section 203(b)(6) of the Interstate Commerce Act), when moving in mixed loads with the commodities in (1) above, from Boston, Gloucester, Lawrence, Wilmington, and Worcester, MA, to points in AL, IA, LA, MS, TN, VA, and DC, under contracts with Boston Bonnie, Inc., and Boston Bonnie Bakers, Inc., both of Boston, MA. (Hearing site: Boston, MA.)

MC 144844 (Sub-2F), filed October 26, 1978. Applicant: OZARK TRANSPORTATION, INC., P.O. Box 203, Greenville, MO 63944. Representative: Joseph Winter, 29 South LaSalle Street, Chicago, IL 60603. To operate as a *common carrier*, by motor vehicle, in interstate or foreign commerce, over irregular routes, transporting *such commodities* as are dealt in or used by manufactures of nails, (except commodities in bulk), from Chicago, IL, to the facilities of American Nail Corporation, at or near St. Charles, MO, restricted to the transportation of traffic originating at the named origin and destined to the indicated destination. (Hearing site: St. Louis, MO.)

MC 144948 (Sub-2F), filed December 6, 1978. Applicant: BILLY WAYNE HUDSON, d/b/a BILL HUDSON, 860 Nicholas Street, Carlinville, IL 62626. Representative: Robert T. Lawley, 300 Reisch Building, Springfield, IL 62701. To operate as a *contract carrier*, by motor vehicle, in interstate or foreign commerce, over irregular routes, transporting (1) *iron and steel articles*, from Carlinville, IL, to points in AL, IN, MO, OK, TN, and TX; (2) *steel pipe, steel tubing, and steel pipe fittings*, from Carlinville, IL, to points in IN, IA, MO, MN, and WI; and (3) *mine ventilating equipment*, from Taylorville, IL, to points in CO, OH, PA, UT, WV, and WY, under contract (a) in (1) above with Central Illinois Steel Co., Inc., of Carlinville, IL, (b) in (2) above with Valley Steel Products Company, a Division of Valley Industries, Inc., of Centralia, IL, and (c) in (3) above with Jack Kennedy Metal Products & Buildings, Inc., of Taylorville, IL. (Hearing site: St. Louis, MO.)

MC 144969 (Sub-4F), filed November 9, 1978. Applicant: WHEATON CARTAGE CO., a Corporation, Millville, NJ 08332. Representative: E. Stephen Heisley, 805 McLachlen Bank Bldg., 666 Eleventh St. NW, Washington, DC 20001. To operate as a *common carrier*, by motor vehicle, in interstate or foreign commerce, over irregular routes, transporting (1) *chemicals* used in the curing and processing of cement and concrete, (except commodities in bulk), and (2) *materials, equipment and supplies* used in the manufacture, distribution, and application of the commodities in (1) above, (except commodities in bulk), (a) from the facilities of Nox-Crete Chemicals, Inc., at or near Omaha, NE, to Edison, NJ, Baton Rouge, LA, and points in AZ, CA, CO, ID, IL, IN, IA, KS, KY, MI, MN, MO, MT, NV, NM, ND, OH, OK, OR, SD, TN, TX, UT, WA, and WI, and (b) from Edison, NJ, Emeryville, CA, Baton Rouge, LA, and points in IL, IN, and OH, to the facilities of Nox-Crete Chemicals, Inc., at or near Omaha, NE, restricted in (a) and (b) above, to the transportation of traffic originating at or destined to the facilities of Nox-Crete Chemicals, Inc., at or near Omaha, NE. (Hearing site: Omaha, NE.)

NOTE.—Dual operations may be involved in this proceeding.

MC 145134 (Sub-2F), field filed September 29, 1978. Applicant: FMLD, Inc., Freeport Road, Box 181, Creighton, PA 15030. Representative: Mark Lasser, 7130 Penn Avenue, Pittsburgh, PA 15208. To operate as a *contract carrier*, by motor vehicle, in interstate or foreign commerce, over irregular routes, transporting *such commodities* as are dealt in or used by manufacturers of petroleum products, between points in the United States (except AL or HI), under contract with Pittsburgh Penn Oil Company, of Creighton, PA. CONDITION: Said carrier shall conduct separately its contract carrier operations and its other business activities. Carrier shall maintain separate accounting systems for each such business. Carrier shall not transport property as both a private and for-hire carrier at the same time and in the same vehicle. (Hearing site: Pittsburgh, PA, or Washington, DC.)

MC 145152 (Sub-21F), filed November 3, 1978. Applicant: BIG THREE TRANSPORTATION, INC., P.O. Box 706, Springdale, AR 72764. Representative: Don Garison, 324 North Second Street, Rogers, AR 72756. To operate as a *common carrier*, by motor vehicle, in interstate or foreign commerce, over irregular routes, transporting *agricultural fungicides, herbicides, disinfectants, and cleaning compounds*, (except commodities in bulk), from the facilities of New South Manufacturing Company, at or near Atlanta, GA, to points in AL, AR, LA, MS, OK, TN, and TX. (Hearing site: Atlanta, GA, or Fayetteville, AR.)

MC 145304 (Sub-1F), filed October 25, 1978. Applicant: LAMPTON-LOVE, INC., 134 South Lamar Street, Jackson, MS 39201. Representative: Donald B. Morrison, 1500 Deposit Guaranty Plaza, P.O. Box, Jackson, MS 39205. To operate as a *common carrier*, by motor vehicle, in interstate or foreign commerce, over irregular routes, transporting *anhydrous ammonia*, in bulk, in tank vehicles, (1) from Yazoo City, MS, to points in AL, AR, LA, and TX, (2) from Pascagoula, MS, to points in AL, FL, GA, and LA, and (3) from the facilities of Mid South Terminals, Inc., at Memphis, TX, to points in AL, AR, MS, and MO. CONDITIONS: The person or persons who it appears may be engaged in common control must either file an application under 49 U.S.C. 11343(a) (formerly section 5(2) of the Interstate Commerce Act), or submit an affidavit indicating why such approval is unnecessary. Said carrier shall conduct separately its common carrier operation and its other business activities. Carrier shall maintain separate accounting systems for each such business. Carrier shall not transport property as both a private and for hire carrier at the same time and in the same vehicle. (Hearing site: Jackson, MS.)

MC 145359 (Sub-1F), filed December 12, 1978. Applicant: THERMO TRANSPORT, INC., 156 E. Market Street, Indianapolis, IN 46204. Representative: Donald W. Smith, P.O. Box 40659, Indianapolis, IN 46204. To operate as a *common carrier*, by motor vehicle, in interstate or foreign commerce, over irregular routes, transporting (1) *lumber and wood products*, and (2) *building materials*, (except

those described in (1) above), from points in AR, AZ, CA, ID, LA, MS, MT, NM, OR, TX, WA, and WY, to points in IN, restricted to the transportation of traffic originating at the named origins and destined to the indicated destinations. (Hearing site: Indianapolis, IN.)

NOTE.—Dual operations are involved in this proceeding.

MC 145426F, filed September 14, 1978. Applicant: ODELL RITTER, INC., 940 Hwy 99 North, Eugene, OR 97402. Representative: Robert R. Hollis, 400 Pacific Bldg., Portland, OR 97204. To operate as a *common carrier*, by motor vehicle, over irregular routes, transporting *lumber and lumber products*, (1) between points in OR and WA, and (2) from points in OR and WA, to points in AZ, CA, CO, ID, NV, UT, and WY. (Hearing site: Eugene or Portland, OR.)

MC 145627, filed October 19, 1978. Applicant: M&T TRUCKING, INC., 4290 State Route No. 7, New Waterford, OH 44445. Representative: Stanley I. Goldman, 1700 K St., NW, Washington, DC 20006. To operate as a *common carrier*, by motor vehicle, in interstate or foreign commerce, over irregular routes, transporting *coal, road building materials, aggregates, clay, and refractory products*, between points in Beaver, Lawrence, Mercer, Butler, Crawford, Erie, and Allegheny Counties, PA, on the one hand, and, on the other, points in Columbiana, Mahoning, and Trumbull Counties, OH. CONDITION: Issuance of this certificate is subject to prior or coincidental cancellation, at applicant's written request, of MC-135062 Sub 1. (Hearing site: Pittsburgh, PA.)

MC 145641F, filed October 26, 1978. Applicant: DILIDO TRANSPORTATION CO., INC., 501-551 West 30th St., New York, NY 10001. Representative: E. Stephen Heisley, 805 McLachlen Bank Bldg., 666 Eleventh St. NW., Washington, DC 20001. To operate as a *contract carrier*, by motor vehicle, in interstate or foreign commerce, over irregular routes, transporting (1) *iron and steel articles*, and *aluminum articles*, and (2) *materials, equipment, and supplies* used in the manufacture, distribution and sale of the commodities named in (1) above, (except commodities in bulk), between New York, NY, on the one hand, and, on the other, points in the United States (except AK and HI), under contract with Metal Purchasing Company, Inc., of New York, NY. (Hearing site: New York, NY.)

MC 145669F, filed November 1, 1978. Applicant: PETROLEUM TANK LINE, a corporation, 2600 Rice Avenue, West Sacramento, CA 06902. Representative: Alan F. Wohlstetter, 1700 K Street NW., Washington, DC 20006. To operate as a *common carrier*, by motor vehicle, in interstate or foreign commerce, over irregular routes, transporting (1) *petroleum and petroleum products*, in bulk, in tank vehicles, (a) from points in Butte, Contra Costa, Sacramento, San Mateo, San Joaquin, Solano, and Yolo Counties, CA, to Carson City, NV, and points in Curry, Jackson, Josephine, Klamath, and Lake Counties, OR, and Churchill, Douglas, Esmeralda, Eureka, Humboldt, Lander, Lyon, Mineral, Nye, Pershing, Storey, and Washoe Counties, NV, and (b) from Sparks, NV, to points in Alpine, Amador, El Dorado, Lassen, Mono, Nevada, Placer, Plumas, and Sierra Counties, CA; and (2) *lignum sulfate*, from points in Yolo County, CA, to points in NV, and those in Curry, Jackson, Josephine, Klamath, and Lake Counties, OR. (Hearing site: Sacramento, CA.)

MC 145702F, filed November 6, 1978. Applicant: TRANSURFACE CARRIERS, INC., 6 Thayer Street, Northboro, MA 01532. Representative: Bernard P. Rome, 31 Milk Street, Boston, MA 02109. To operate as a *contract carrier*, by motor vehicle, in interstate or foreign commerce, over irregular routes, transporting *woodworking hand tools, automatic door-operating equipment, steel strapping, steel strip, builders' hardware, industrial hardware, and drapery hardware*, from Farmington, New Britain, and Wallingford, CT, to points in the United States (except AK, HI, and CT), under contract with The Stanley Works, of New Britain, CT. (Hearing site: Washington, DC, or Boston, MA.)

MC 145785 (Sub-2F), filed December 4, 1978. Applicant: McADAMS TRUCKING CO., a corporation, 3 South Des Plaines, Joliet, IL 60431. Representative: Patrick H. Smyth, Suite 521, 19 South LaSalle Street, Chicago, IL 60603. To operate as a *contract carrier*, by motor vehicle, in interstate or foreign commerce, over irregular routes, transporting (1) *steel parts for trusses*, from the facilities of Alpine Engineered Products, Inc., at or near St. Charles, IL, to points in IA, IN, KY, MI, MN, MO, ND, NE, NJ, NY, OH, PA, SD, WI, and WV, and (2) *materials, equipment, and supplies* used in the manufacture and distribution of the commodities in (1) above, (except commodities in bulk), in the reverse direction, under contract with Alpine Engineered Products, Inc., of St. Charles, IL. (Hearing site: Chicago, IL.)

MC 145789F, filed November 20, 1978. Applicant: WILLIAM JOSEPH SWOPE, JR., Route No. 1; Lexington, Rd., Winchester, KY 40391. Representative: Herber D. Liebman, P.O. Box 478, Frankfort, KY 40602. To operate as a *common carrier*, by motor vehicle, in interstate or foreign commerce, over irregular routes, transporting *boats* from points in Clark County, KY, to points in FL, MD, and MS. (Hearing site: Frankfort or Lexington, KY.)

MC 145849F, filed December 7, 1978. Applicant: CHARLES MONIN AND JOSEPH MONIN, A Partnership, doing business as MONIN BROTHERS, 300 W. John Rowan Blvd., Bardstown, KY 40004. Representative: Robert H. Kinker, P.O. Box 464, Frankfort, KY 40602. To operate as a *common carrier*, by motor vehicle, in interstate or foreign commerce, over irregular routes, transporting *malt beverages*, from Evansville and Ft. Wayne, IN, Detroit, MI, Eden, NC, Cincinnati, OH, Memphis, TN, and Milwaukee, WI, to Bardstown, KY. (Hearing site: Bardstown or Louisville, KY.)

PASSENGER AUTHORITY

MC 88929 (Sub-3F), filed December 6, 1978. Applicant: BAGGSTROM'S BUS SERVICE, INC., Route 12, Frenchtown, NJ 08825. Representative: Larsh B. Mewhinney, 555 Madison Ave., New York, NY 10022. To operate as a *common carrier*, by motor vehicle, in interstate or foreign commerce, over irregular routes, transporting *passengers and their baggage* in the same vehicle with passengers, in special and charter operations, beginning and ending at points in Hunterdon County, NJ, and those points in PA on an east of a line beginning at the PA-NJ State line and extending along PA Hwy 611 to Danboro, then along PA Hwy 611 ByPass, near Doylestown, then along U.S. Hwy 202 ByPass to junction U.S. Hwy 202 ByPass to junction U.S. Hwy 202, then along U.S. Hwy 202 to the PA-NJ State line, and extending to points in CT, DE, IL, IN, KY, ME, MD, MA, MI, NH, NJ, NY, OH, PA, RI, VA, VT, WV, and DC. (Hearing site: Newark, NJ, or Philadelphia, PA.)

MC 145845F, filed December 4, 1978. Applicant: RAYMOND W. PAYNE, d./b./a. PAYNE BUS SERVICE, Route No. 1, Box 122, Beverdam, VA 23015. Representative: Leonard A. Jaskiewicz, 1730 M Street NW., Suite 501, Washington, DC 20036. To operate as a *common carrier*, by motor vehicle, in interstate or foreign commerce, over irregular routes, transporting *passengers and their baggage* in the same vehicle with passengers, in round-trip charter operations, beginning and ending at Fredericksburg and Richmond, VA, and points in Stafford, Spotsylvania, King George, Caroline, King and Queen, King William, Hanover, Henrico, Louisa, and Orange

Counties, VA, and extending to those points in the United States in and east of MN, IA, MO, AR, LA. (Hearing site: Fredericksburg, VA.)

[FR Doc. 79-1687 Filed 1-17-79; 8:45 am]

[7035-01-M]

[Volume No. 3]

## PETITIONS, APPLICATIONS, FINANCE MATTERS (INCLUDING TEMPORARY AUTHORITIES), ALTERNATE ROUTE DEVIATIONS, AND INTRASTATE APPLICATIONS

### Petitions for Modification, Interpretation, or Reinstatement of Operating Rights Authority

JANUARY 10, 1979.

The following petitions seek modification or interpretation of existing operating rights authority, or reinstatement of terminated operating rights authority.

All pleadings and documents must clearly specify the suffix (e.g. M1 F, M2 F) numbers where the docket is so identified in this notice.

An original and one copy of protests to the granting of the requested authority must be filed with the Commission within 30 days after the date of this notice. Such protests shall comply with Special Rule 247(e) of the Commission's *General Rules of Practice* (49 CFR 1100.247)[1] and shall include a concise statement of protestant's interest in the proceeding and copies of its conflicting authorities. Verified statements in opposition should not be tendered at this time. A copy of the protest shall be served concurrently upon petitioner's representative, or petitioner if no representative is named.

MC 99439 (Sub-3) (M1F) (notice of filing of petition to modify certificate), filed October 16, 1978. Petitioner: SUWANNEE TRANSFER, INC., 1830 E. 21st Street, Jacksonville, FL 32206. Representative: Dan R. Schwartz, 1729 Gulf Life Tower, Jacksonville, FL 32207. Petitioner holds a motor *common carrier* certificate in MC 99439 Sub 3, issued September 14, 1977, authorizing transportation over irregular routes, of (a) *Commodities* the transportation of which by reason of size or weight require the use of special equipment, and *related machinery and parts and related contractors' materials and supplies* when their transportation is incidental to the transportation of commodities which by reason of size or weight require special equipment, (b) *iron and steel articles* as described in Appendix V to the report in *Descriptions in Motor Carrier Certificates*, 61 M.C.C. 209; and (c) *plastic pipe*, between points in FL, and between points in FL, on the one hand, and, on the other, points in GA. Restriction: The authority granted herein is restricted against the transportation of aerospacecraft, aerospacecraft parts, and aerospacecraft ground support equipment. By the instant petition, petitioner seeks to broaden the commodity description in part (c) above, to read as follows: "(c) *plastic, plastic articles, plastic pipe, tubing, fittings, and connections, materials, supplies, and accessories* used in the manufacture and installation of all such commodities in the manufacture and installation of all such commodities in part (c) hereof (except in bulk, in tank vehicles)."

MC 124887 (Sub-11) (M1F) (Notice of filing of petition to modify certificate), filed October 11, 1978. Petitioner: SHELTON TRUCKING SERVICE, INC., Route 1, Box 230, Altha, FL 32421. Representative: Sol H. Proctor, 1101 Blackstone Building, Jacksonville, FL 32202. Petitioner holds a motor *common carrier* certificate in MC 124887 Sub 11 issued September 16, 1975 authorizing transportation, as pertinent, over irregular routes, of *Steel joists*, from the plant site of Socar, Inc., in Florence County, SC, to points in FL, GA, NC, and TN. By the instant petition, petitioner seeks to modify the above authority by deleting the plant site reference in the origin so the origin would read: "from points in Florence County, SC".

MC 141426 (Sub-10) (M1F) (Notice of filing of petition to modify permit), filed October 12, 1978. Petitioner: WHEATON CARTAGE CO., INC., Millville, NJ 08332. Representative: E. STEPHEN HEISLEY, 805 McLachlen Bank Building, 666 Eleventh Street, N.W., Washington, D.C. 20001. Petitioner holds motor *contract carrier* permit in MC 141426 Sub 10, issued August 24, 1978, authorizing transportation, over irregular routes, of *Glass products, metal products, plastic products, paper products, wax products, clay products, feldspar products and wood products, foodstuffs, antipollution and bio-chemical apparatus, products used in radiological research, organic chemistry kits, bottle coating systems, talc, feldspar, candles, pottery, chinaware, ceramics, gift items, molds and machinery* and *parts and accessories* for the above-described commodities and *materials, equipment and supplies* used in the manufacture or distribution of the above-named commodities (except in bulk, in tank vehicles), between the facilities of Wheaton Industries at or near Miami, FL, on the one hand, and, on the other, points in the United States (except AK and HI), under a continuing contract(s) with Wheaton Industries of Millville, NJ. By the instant petition, petitioner seeks to modify the above authority to add American International Container, Inc. as an additional contracting shipper, and also to add an additional radial base point of Tampa, FL.

MC 141871 (M1F) (Notice of filing of petition to modify certificate), filed March 16, 1978. Petitioner: WNI SERVICE SYSTEM, 8700 S.W. Elligsen Rd., Wilsonville, OR 97070. Representative: John R. Patterson, 2480 E. Commercial Blvd., Fort Lauderdale, FL 33308. Petitioner holds a motor *common carrier* certificate in MC 141871 issued April 18, 1977 authorizing transportation, over irregular routes, as pertinent, of (1) *Plastic products* except commodities in bulk), from Lewiston and Clearfield, UT, to points in AZ, CA, CO, ID, MT, NM, NV, OR, UT, WA, and WY, and (2) *Equipment materials and supplies* (except commodities in bulk and those which because of size or weight require special equipment), used in the manufacture and distribution of plastic products, from points in the destination States named above, to Lewiston and Clearfield, UT. By the instant petition, petitioner seeks to modify the above authority by adding "aluminum foil and stretch wrap holders" to the commodity descriptions in (1) and (2) above.

### REPUBLICATIONS OF GRANTS OF OPERATING RIGHTS AUTHORITY PRIOR TO CERTIFICATION

The following grants of operating rights authorities are republished by order of the Commission to indicate a broadened grant of authority over that previously noticed in the FEDERAL REGISTER. An original and one copy of a petition for leave to intervene in the proceeding must be filed with the Commission on or before February 20, 1979. Such pleading shall comply with Special Rule 247(e) of the Commission's *General Rules of Practice* (49 CFR 1100.247) addressing specifically the issue(s) indicated as the purpose for republication, and including copies of intervenor's conflicting authorities and a concise statement of intervenor's interest in the proceeding setting forth in detail the precise manner in which it has been prejudiced by lack of notice of the authority granted. A copy of the pleading shall be served concurrently upon the carrier's representative, or carrier if no representative is named.

MC 108207 (Sub-478F) (republication), filed March 24, 1978, published in the FEDERAL REGISTER issue of May 11, 1978, and republished this issue. Applicant: FROZEN FOOD EXPRESS, INC., P.O. Box 5888, Dallas, TX 75222. Representative: Mike Smith

[1] Copies of Special Rule 247 (as amended) can be obtained by writing to the Secretary, Interstate Commerce Commission, Washington, D.C. 20423.

(same address as applicant). A Decision of the Commission, Review Board Number 3, decided December 4, 1978, and served January 3, 1979, finds that the present and future public convenience and necessity require operations by applicant in interstate or foreign commerce as a *common carrier*, by motor vehicle, over irregular routes, in the transportation of *Foodstuffs* (except in bulk), *from the facilities of* Welch Foods, Inc., at or near Lawton, MI, to points in AR, KS, LA, MS, MO, NM, OK, TN, and TX, *restricted to* the transportation of traffic originating at the named facilities and destined to the named destination States, that applicant is fit, willing, and able properly to perform such service and to conform to the requirements of the Interstate Commerce Act and the Commission's rules and regulations. The purpose of this republication is to indicate applicant's actual grant of authority.

MC 112184 (Sub-57) (2nd republication), filed October 3, 1977, published in the FEDERAL REGISTER issues of December 30, 1977, and September 7, 1978, and republished this issue. Applicant: THE MANFREDI MOTOR TRANSIT CO., a Corporation, 11250 Kinsman Road, Newberry, OH 44065. Representative: John P. McMahon, 100 East Broad Street, Columbus, OH 43215. A Decision of the Commission, Division 1, decided December 15, 1978, and served December 28, 1978, finds that the present and future public convenience and necessity require operations by applicant in interstate or foreign commerce as a *contract carrier*, by motor vehicle, over irregular routes, in the transportation of (1) *Paint ingredients*, in bulk, in tank vehicles, from Oak Creek, WI, and Wallingford, CT, to Cleveland, OH; and (2) *paint and paint products*, in bulk, in tank vehicles, from, Cleveland, OH, to (a) Leed, MO, Chicago, IL, Tarreytown, NY, Wilmington, DE, Oklahoma City, OK, Baltimore, MD, Atlanta, Doraville and Lakewood, GA, Arlington, TX, Norfolk, VA, Minneapolis and St. Paul, MN, Louisville, KY, Fremont, San Jose, Southgate and Van Nuys, CA; and (b) ports of entry on the International Boundary line between the United States and Canada which lie between Buffalo, NY, and Calais, ME, inclusive, under a continuing contract or contracts with PPG Industries, Inc., a Pittsburgh, PA, will be consistent with the public interest and the national transportation policy, that applicant is fit, willing, and able properly to perform such service and to conform to the requirements of the Interstate Commerce Act and the Commission's rules and regulations. The purpose of this republication is to indicate applicant's actual grant of authority.

MOTOR CARRIER, BROKER, WATER CARRIER AND FREIGHT FORWARDER OPERATING RIGHTS APPLICATIONS

The following applications are governed by Special Rule 247 of the Commission's General Rules of Practice (49 CFR 1100.247). These rules provide, among other things, that a protest to the granting of an application must be filed with the Commission within 30 days after the date of notice of filing of the application is published in the FEDERAL REGISTER. Failure to seasonably file a protest will be construed as a waiver of opposition and participation in the proceeding. A protest under these rules should comply with section 247(e)(3) of the rules of practice which requires that it set forth specifically the grounds upon which it is made, contain a detailed statement of protestant's interest in the proceeding (including a copy of the specific portions of its authority which protestant believes to be in conflict with that sought in the application, and describing in detail the method—whether by joinder, interline, or other means—by which protestant would use a such authority to provide all or part of the service proposed), and shall specify with particularity the facts, matters, and things relied upon, but shall not include issues or allegations phrased generally. Protests not in reasonable compliance with the requirements of the rules may be rejected.

The original and one copy of the protest shall be filed with the Commission, and a copy shall be served concurrently upon applicant's representative, or applicant if no representative is named. All pleadings and documents must clearly specify the "F" suffix where the docket is so identified in this notice. If the protest includes a request for oral hearing, such request shall meet the requirements of Section 247(e)(4) of the special rules, and shall include the certification required therein.

Section 247(f) further provides, in part, that an applicant who does not intend timely to prosecute its application shall promptly request dismissal thereof, and that failure to prosecute an application under procedures ordered by the Commission will result in dismissal of the application.

Further processing steps will be by Commission decision which will be served on each party of record. *Broadening amendments will not be accepted after the date of this publication except for good cause shown, and restrictive amendments will not be entertained following publication in the* FEDERAL REGISTER *of a notice that the proceeding has been assigned for oral hearing.*

Each applicant states that approval of its application will not significantly affect the quality of the human environment nor involve a major regulatory action under the Energy Policy and Conservation Act of 1975.

MC 25798 (Sub-347F), filed December 11, 1978. Applicant: CLAY HYDER TRUCKING LINES, INC., A North Carolina Corporation, P.O. Box 1186, Auburndale, FL 33823. Representative: Tony G. Russell (same address as applicant). Authority sought to operate as a *common carrier*, by motor vehicle, in interstate or foreign commerce, over irregular routes, transporting *drugs, toilet preparations, health care products, aluminum calcined, magnesium hydroxide, soaps, and dental care cleaning compounds*, (except commodities in bulk), (1) from Philadelphia, PA, and Lewes, DE, to points in the United States (except AK, CT, DE, HI, ME, MD, MA, NH, NJ, NY, PA, RI, VA, VT, WV, and DC), (2) from Lakewood, NJ, and Millsboro, DE, to points in AR, CA, CO, GA, IL, LA, MO, NV, OK, and TX, (3) from Friendship (Guilford County), NC, to points in the United States (except AK, HI, NC, SC, and VA), (4) from Round Rock, TX, to points in the United States (except AK, HI, and TX), (5) from San Leandro, CA, to points in IN, GA, and PA, (6) from Reno, NV, to points in PA, and (7) from West Point, PA, to points in CA, CO, and OR. (Hearing site: Washington, DC.)

MC 123255 (Sub-186F), filed November 30, 1978. Applicant: B & L MOTOR FREIGHT, INC., 1984 Coffman Road, Newark, OH 43055. Representative: C. F. Schnee, Jr. (same address as applicant). Authority sought to operate as a *common carrier*, by motor vehicle, over irregular routes, transporting: (1) *Containers, container ends, and closures*, (2) *commodities* manufactured or distributed by manufacturers and distributors of containers when moving in mixed loads with containers; and (3) *materials, equipment and supplies* used in the manufacture and distribution of containers, container ends and closures, restricted in (1) through (3) above against the transportation of commodities in bulk. Note: Common control may be involved. Procedural information: Applicants shall file their initial verified statements on or before February 13, 1979. Protestants shall file their verified reply statements on or before March 13, 1979. Applicants shall file their rebuttal statements on or before April 2, 1979.

MC 124211 (Sub-350F), filed December 26, 1978. Applicant: HILT TRUCK LINE, INC., P.O. Box 988 D.T.S., Omaha, NE 68101. Representative: A. J. Swanson, 521 South 14th Street, P.O. Box 81849, Lincoln, NE 68501. Authority sought to operate as a

*common carrier,* by motor vehicle, over irregular routes, transporting: (1) *Containers, container ends, and closures,* (2) *commodities* manufactured or distributed by manufacturers and distributors of containers when moving in mixed loads with containers; and (3) *materials, equipment and supplies* used in the manufacture and distribution of containers, container ends and closures, restricted in (1) through (3) above against the transportation of commodities in bulk.

NOTE.-Common control may be involved. Procedural information: Applicants shall file their initial verified statements on or before February 13, 1979. Protestants shall file their verified reply statements on or before March 13, 1979. Applicants shall file their rebuttal statements on or before April 2, 1979.

MC 135684 (Sub-85F), filed December 27, 1978. Applicant: BASS TRANSPORTATION CO., INC., P.O. Box 391, Old Croton Road, Flemington, NJ 08822. Representative: Herbert Alan Dubin, 1320 Fenwick Lane, Silver Spring, MD 20910. Authority sought to operate as a *common carrier,* by motor vehicle, over irregular routes, transporting: (1) *Containers, container ends, and closures,* (2) *commodities* manufactured or distributed by manufacturers and distributors of containers when moving in mixed loads with containers; and (3) *materials, equipment and supplies* used in the manufacture and distribution of containers, container ends and closures, restricted in (1) through (3) above against the transportation of commodities in bulk.

NOTE.-Procedural information: Applicants shall file their initial verified statements on or before February 13, 1979. Protestants shall file their verified reply statements on or before March 13, 1979. Applicants shall file their rebuttal statements on or before April 2, 1979.

MC 139495 (Sub-402F), filed December 27, 1978. Applicant: NATIONAL CARRIERS, INC., 1501 East 8th Street, P.O. Box 1358, Liberal, KS 67901. Representative: Herbert Alan Dubin, 1320 Fenwick Lane, Silver Spring, MD 20910. Authority sought to operate as a *common carrier,* by motor vehicle, over irregular routes, transporting: (1) *Containers, container ends, and closures,* (2) *commodities* manufactured or distributed by manufacturers and distributors of containers when moving in mixed loads with containers; and (3) *materials, equipment and supplies* used in the manufacture and distribution of containers, container ends and closures, restricted in (1) through (3) above against the transportation of commodities in bulk.

NOTE.-Procedural information: Applicants shall file their initial verified statements on or before February 13, 1079. Protestants shall file their verified reply statements on or before March 13, 1979. Applicants shall file their rebuttal statements on or before April 2, 1979.

MC 139577 (Sub-29F), filed December 18, 1978. Applicant: ADAMS TRANSIT, INC., P.O. Box 338, Friesland, WI 53935. Representative: Wayne W. Wilson, 150 E. Gilman Street, Madison, WI 53703. Authority sought to operate as a *common carrier,* by motor vehicle, over irregular routes, transporting: (1) *Containers, container ends, and closures,* (2) *commodities* manufactured or distributed by manufacturers and distributors of containers when moving in mixed loads with containers; and (3) *materials, equipment and supplies* used in the manufacture and distribution of containers, container ends and closures, restricted in (1) through (3) above against the transportation of commodities in bulk.

NOTE.-Procedural information: Applicants shall file their initial verified statements on or before February 13, 1979. Protestants shall file their verified reply statements on or before March 13, 1979. Applicants shall file their rebuttal statements on or before April 2, 1979.

PASSENGER

MC 140247 (Sub-2F), filed October 23, 1978. Applicant: ALLSTATE CHARTER LINES, INC., P.O. Box 9022, Fresno, CA 93790. Representative: John Paul Fischer, 256 Montgomery Street, San Francisco, CA 94104. Authority to operate as a *common carrier,* by motor vehicle, in interstate or foreign commerce, over irregular routes, *transporting passengers and their baggage* in the same vehicle with passengers, in round trip, charter and special operations, in executive coach service, beginning and ending at points in AZ, CA, NV and OR, and extending to points in the United States, including AK, but excluding HI. (Hearing site: San Francisco, CA.)

NOTE.—Common control may be involved.

FINANCE APPLICATIONS

The following applications seek approval to consolidate, purchase, merge, lease operating rights and properties, or acquire control through ownership of stock, of rail carriers or motor carriers pursuant to Sections 11343 (formerly Section 5(2)) or 11349 (formerly Section 210a(b)) of the Interstate Commerce Act.

An original and one copy of protests against the granting of the requested authority must be filed with the Commission on or before February 20, 1979. Such protest shall comply with Special Rules 240(c) or 240(d) of the Commission's *General Rules of Practice* (49 CFR 1100.240) and shall include a concise statement of protestant's interest in the proceeding. A copy of the protest shall be served concurrently upon applicant's representative, or applicant, if no representative is named.

Each applicant states that approval of its application will not significantly affect the quality of the human environment nor involve a major regulatory action under the Energy Policy and Conservation Act of 1975.

MC-F-13822F. Applicant: WESTPORT TRUCKING COMPANY, 812 South Silver, Paola, Kansas 66071. Representative: Arthur J. Cerra, 2100 TenMain Center, P.O. Box 19251, Kansas City, Missouri 64141. Authority sought for purchase by Westport Trucking Company, 812 South Silver, P.O. Box 40, Paola, KS 66071, a portion of the operating rights of Arnold E. Debrick d/b/a Debrick Truck Lines, 103 North Silver, P.O. Box 421, Paola, KS 66071, and for acquisition by Laredo Express Company and John M. Edgar, 2100 TenMain Center, Kansas City, MO 64105, of control of the rights through purchase. Operating rights sought to be purchased: Green and salted hides (1) *Between points* in KS, MO and NE, restricted against service to or from Pittsburg, Parsons, Coffeyville and Independence, KS and Joplin, Carthage and Springfield, MO; (2) From points in ND, SD, CO, MT, WY, OK and TX to points in KS, MO, and NE, restricted against traffic originating at (a) Sioux Falls, SD and destined to Kansas City, KS-MO, and (b) Sioux Falls and Huron, SD and Fargo and West Fargo, ND destined to points in NE. Approval of the proposed transaction will result in vendee acquiring operating authority to handle traffic which it is presently handling in interline service with Vendor at Liberal and Sedgwick County, KS; Enid and Muskogee, OK; and Butler, Joplin, Kansas City and Springfield, MO. Vendee is authorized to operate as a common carrier in all the States in the United States (except Alaska and Hawaii). Application has been filed for temporary authority under section 210a(b) of the Act.

NOTE.—MC-126822 (Sub-No. 53F) is a directly related matter.

MC-F-13839F. Authority sought for purchase by ZELLMER TRUCK LINES, INC., P.O. Box 343, Granville, IL 63126, a portion of the operating rights of Farris Truck Line, P.O. Box 224, Faucett, MO 64448, and for acquisition by Henry Zellmer of control of the rights through purchase. Attorneys: E. Stephen Heisley, 666 Eleventh Street, NW, No. 805, Washington, DC 20001; Tom B. Kretsinger, 20 E. Franklin, Liberty, MO 64068. Operating rights sought to be purchased: (1) *Dry fertilizer* and *fertilizer materials,* from the facilities of W. R. Grace & Co. located at or near Henry, IL to points in IA, IN, KY, MI, MN, MO,

OH, and WI; (2) *Dry fertilizer, dry fertilizer materials, urea, and pesticides* (except liquid in tank vehicles), from the facilities of W. R. Grace & Co. at or near Henry, IL to points in OH, MI, KY, TN, IL, WI, MN, IA, MO, NE, KS, IN, AR, OK, ND, and SD; from the facilities of W. R. Grace & Co. at or near Perry, IA to points in MN, WI, NE, KS, and IL; from the facilities of W. R. Grace & Co. at or near Lansing, MI to points in OH, IN, and IL; from the facilities of W. R. Grace & Co. at or near New Albany, IN to points in OH, IL, KY, and TN; from the facilities of W. R. Grace & Co. at Columbus, OH to points in MI, IN, IL, KY, and TN. RESTRICTION: The operations in (1) and (2) are limited to a transportation service to be performed under a continuing contract, or contracts, with W. R. Grace & Co. of New York, NY. Vandee is authorized to operate as a *common carrier* in certain States in the United States. Application has been filed for temporary authority under Section 210a(b).

NOTE.—MC 127303 (Sub 51F), is a directly related matter.

MC-F-138484F. Authority sought for purchase by MECCA & SON TRUCKING CORP., 25 Fairmount Ave., Jersey City, NJ 07304, of a portion of the operating rights of CENTRAL TRANSFER COMPANY, 1080 Springfield Rd., Union, NJ 07083, and for acquisition by Jerry Mecca and Helen Mecca, also of 25 Fairmount Ave., Jersey City, NJ 07304. Applicant's attorneys: A. DAVID MILLNER, P.O. Box 1409, 167 Fairfield Rd., Fairfield, NJ 07006, and THOMAS F. X. FOLEY, State Highway 34, Colts Neck, NJ 07722. Operating rights sought to be transferred: That portion of Certificate No. MC-1403 (Sub-No. 2), authorizing the transportation of *general commodities*, with exceptions, as a motor common carrier over *regular* routes BETWEEN Philadelphia, PA and Princeton, NJ, serving the intermediate points of Bristol and Morrisville, PA; and Trenton and Lawrenceville, NJ; FROM Philadelphia over US Hwy 13 to Morrisville, PA, then over US Hwy 1 to Trenton, NJ, and then over US Hwy 206 to Princeton, and return over the same route. Transferee is a common carrier authorized to operate in NY, NJ, and PA. Application has not been filed for temporary authority under Section 210a(b).

MC-F-13859F. Applicant: VALION R. JORDAN, 100 Beta Drive, P.O. Box 756, Franklin, TN 37064. Representative: William J. Monheim, P.O. Box 1756, Whittier, CA 90609. Authority sought for control by Valion R. Jordan, 100 Beta Drive, P.O. Box 756, Franklin, TN 37064 of (B) Rajor, Inc. and (BB) California Express, Ltd. both of 100 Beta Drive, P.O. Box 756, Franklin, TN 37064. Rajor, Inc. operates as a contract carrier, over irregular routes, in all points in the United States (except Alaska and Hawaii) under authority issued by the Commission in Permit No. MC 129862 Subs 1, 2, 3, 4, 5, 11, 12, 15, 17F, 18TA, and 20TA. Rajor, Inc. also has a contract carrier application pending, MC 129862 Sub 19F as well as two common carrier temporary authority applications, MC 145392 TA and Sub 1TA. California Express, Ltd. does not hold any authority from the Commission but is filing an application simultaneously with this control application which, because of the *Hannon* principle is directly related to this application. There is no duplicating authority involved but approval of the transaction will result in dual operations. VALION R. JORDAN holds no authority from this Commission. However, he owns all the stock of RAJOR, INC. Application for temporary authority under Section 210a(b) has not been filed. (HEARING SITE: Nashville, TN or Washington, D.C.)

NOTE.—No. MC-145979F is a directly related matter.

MC-F-13861F. Authority sought for the purchase by LOMBARD BROTHERS, INCORPORATED, 233 Mill Street, Waterbury, CT 06706, of the operating rights of APD TRANSPORT CORP., 1 Railroad Place, Maspeth, NY 11378, and for acquisition by Clotilda Lombard, New Haven Road, Prospect, CT 06712, and A. J. Lombard, Flanders Road, Woodbury, CT 06798, of control of such rights through the purchase. Applicants' attorneys: Hugh M. Joseloff, 80 State Street, Hartford, CT 06103 and Morton E. Kiel, 5 World Trade Center, New York, NY 10048. Operating rights sought to be transferred: *General commodities*, with the usual exceptions, as a *common carrier*, between points in the New York, NY commercial zone, on the one hand, and on the other, points in CT, NJ and NY within 50 miles of the New York, NY commercial zone; and certain specific commodities, between points in PA, a short distance beyond the 50 mile radius, and the New York, NY commercial zone. Approval thereof will result in some duplication of rights to a small extent. Vendee is authorized to operate as a common carrier in MA, RI, CT, NH, NY, NJ, PA, MD, VT, ME, DE and DC. Application has been filed for temporary authority under Section 210a(b). NOTE: MC 42289 (Sub No. 12) is a directly related matter. (Hearing site: Hartford, CT or Washington, DC.)

NOTE.—No. MC-42289 (Sub-No. 12F) is a directly related matter.

MC-F-13868F. Applicant: RYDER TRUCK LINES, INC., 2050 Kings Road, Jacksonville, FL 32209. Representatives Roland Rice, Esq., Suite 501, 1111 E Street, NW., Washington, DC 20004; Alan Kahn, Esq., 1920 Two Penn Center, Philadelphia, PA 19102. Authority sought for the purchase by RYDER TRUCK LINES, INC., 2050 Kings Road, Jacksonville, FL 32209, of a portion of the operating rights of SHANAHAN MOTOR LINES, INC., 1001 Fairview Street, Camden, NJ 09104, and for acquisition by I.U. Transportation Services, 1105 N. Market Street, The Wilmington Tower, Wilmington, DE 19801, and in turn, by I.U. International Corp., of the same address, of control of such rights through the transaction. Operating rights sought to be transferred: *General commodities* (except those of unusual value, classes A and B explosives, household goods as defined by the Commission, commodities in bulk, commodities requiring special equipment, automobiles and trucks, and garments on hangers) as a *common carrier* over *irregular routes*, between Philadelphia, PA, and points in that part of New Jersey south of a line beginning at Trenton, NJ, and extending along Mercer County Hwy, 535 through Edinburg, NJ, to Locust Corner, NJ, thence along Mercer County Hwy. 571 to junction New Jersey Hwy, 33, thence along New Jersey Hwy. 33 to junction Monmouth County Hwy, 537 near Freehold, NJ, and thence along Monmouth County Hwy, 537 through Freehold, Colts Neck, Eatontown, and Long Branch, NJ, to the Atlantic Ocean, including points on the indicated portions of the highways specified. The authority granted herein to the extent that it duplicates any authority heretofore granted to or now held by carrier shall not be construed as conferring more than one operating right. Vendee is authorized to operate pursuant to Certificate No. MC-2900 and Subs as a *common carrier* of general and specified commodities in the States of AL, AR, CT, DE, FL, GA, IL, IN, KY, LA, MA, MD, ME, MI, MO, MS, NC, NH, NJ, NY, OH, OK, PA, RI, SC, TN, TX, VA, WI, WV, and DC. Application has been filed for temporary authority under Section 210a(b). (Hearing site: Washington, DC.)

MC-F-13871F. Authority sought for purchase by EAST TEXAS MOTOR FREIGHT LINES, INC., 2355 Stemmons Freeway, Dallas, TX 75207, of a portion of the operating rights of Shanahan Motor Lines, Inc., 1001 Fairview Street, Camden, NJ 08104 and for acquisition by H. R. Bright, Individually, and as Executor and Trustee of the Estate of Mary Frances Smith Bright, Deceased, also of 2355 Stemmons Freeway, Dallas, TX 75207, of control of such rights through the purchase. Applicant's attorneys: J.

Raymond Chesney, P.O. Box 10125, Dallas, TX 75207 and Alan Kahn, 1920 Two Penn Central Plaza, Philadelphia, PA 19102. Operating rights sought to be transferred: *General Commodities,* with the usual exceptions, as a common carrier, over regular routes, between New York, NY and Boston, MA, serving points within 25 miles of the State House in Boston; between New Haven, CT and Boston, MA, serving points within 25 miles of the State House in Boston; between New York, NY and New Haven, CT, serving the intermediate and off-route points of Bridgeport, Stamford, Fairfield, Westport, Greenwich, Derby, South Norwalk, Meriden, Middletown, Hartford, Shelton, Ansonia, New Britain, Manchester, Bristol, West Haven, East Haven and Branford, CT, Yonkers, NY, and Hoboken, Weehawken and Jersey City, NJ; between Boston, MA and Norwalk, CT, serving all intermediate points and the off-route points of Canton, Montville, New Britain, Rockville, Simsbury, Stafford, Thompson, Thompsonville, Torrington, Unionville, Versailles, Willington and Winstead, CT, points within 8 miles of Boston, MA, points within 8 miles of Norwalk, CT, and points within 12 miles of Providence, RI; between New York, NY and New Haven, CT, serving all intermediate points; between Bridgeport, CT and New Haven, CT, serving all intermediate points; between New Haven, CT and Norwich, CT, serving all intermediate points; between Derby, CT and Waterbury, CT, serving all intermediate points; serving the off-route points of New Milford, Torrington, Baltic, Franklin, Occum, Taftville, Jewett City and Versailles, CT and points in Connecticut on and south of U.S. Hwy. 6 and west of Connecticut Hwy. 32 (except Chester, Deep River, Center Brook, Ivoryton, and Essex, CT); and *General Commodities,* with the usual exceptions, over irregular routes, from New York, NY to Springfield, MA, as more fully described in Docket No. MC-F-13431. Vendee is authorized to operate pursuant to Certificate No. MC-41432 and subs thereunder and MC-F-12872 as a common carrier in Alabama, Arizona, Arkansas, California, Connecticut, Delaware, Florida, Georgia, Illinois, Indiana, Iowa, Kentucky, Louisiana, Maryland, Michigan, Mississippi, Missouri, New Jersey, New York, North Carolina, Ohio, Oregon, Pennsylvania, South Carolina, Tennessee, Texas, Utah, Virginia, Washington, West Virginia, Wisconsin, and the District of Columbia. Approval of the proposed transaction will result in Vendee acquiring no duplicating authority. Approval of the proposed transaction will result in a split of Vendor's authority at New York, NY. Application has been filed for temporary authority under Section 210a(b) of the Act.

MC-F-13872F. Authority sought for purchase by SUNDERMAN TRANSFER INC., Box 63, Windom, MN 56101, of a portion of the operating rights of Katuin Bros., Inc., Highway 61 South, P. O. Box 311, Fort Madison, IA 52627, and for acquisition by Sunderman Transfer Inc., of control of such rights through acquisition. Representative: Carl E. Munson, 469 Fischer Building, Dubuque, IA 52001. Operating rights sought to be purchased are those contained in MC 126539 Sub Nos. 14, 36F and 39F thereunder which authorize the transportation of: Foodstuffs and nonedible food products, in vehicles equipped with mechanical refrigeration, from Bettendorf, IA, to IL, MN, MO, NE, SD and WI, restricted to traffic originating at facilities of Terminal Ice & Cold Storage Co., and destined to above-named destinations. Foodstuffs (except in bulk) in mechanically refrigerated equipment, from the facilities of Termicold Corp. at or near Bettendorf, IA, to IN, KY, MI, OH, PA and WV, restricted to the transportation originating at named origin and destined to indicated destinations. Frozen foods (except in bulk), from facilities of Termicold Corp. at or near Plover, WI, to points in AR, IL, IN, IA, KS, KY, LA, MI, MN, MS, NE, OH, PA, SD, TN, TX, restricted to the transportation of traffic originating at named origin and destined to indicated destinations. Vendee authorized to transport commodities between named points in AL, AR, CO, CT, DC, GA, IL, IN, IA, KY, LA, MA, ME, MI, MD, MN, MO, MS, NC, ND, NE, NJ, NH, NY, OH, PA, RI, SC, SD, TN, TX, VA, VT, WI, and WV. No duplicating authority involved but possible dual operations. Sec. 5 Application filed. (Hearing Site: Minneapolis, MN.)

OPERATING RIGHTS APPLICATION(S) DIRECTLY RELATED TO FINANCE PROCEEDINGS

The following operating rights application(s) are filed in connection with pending finance applications under section 11343 (formerly Section 5(2)) of the Interstate Commerce Act, or seek tacking and/or gateway elimination in connection with transfer applications under Section 10926 (formerly Section 212(b)) of the Interstate Commerce Act.

An original and one copy of protests to the granting of the authorities must be filed with the Commission on or before February 20, 1979. Such protests shall comply with Special Rule 247(e) of the Commission's *General Rules of Practice* (49 CFR 1100.247) and include a concise statement of protestant's interest in the proceeding and copies of its conflicting authorities. Verified statements in opposition should not be tendered at this time. A copy of the protest shall be served concurrently upon applicant's representative or applicant if no representative is named.

Each applicant states that approval of its application will not significantly affect the quality of the human environment nor involve a major regulatory action under the Energy Policy and Conservation Act of 1975.

MC 42289 (Sub-12F), filed December 14, 1978. Applicant: LOMBARD BROTHERS, INCORPORATED, 233 Mill Street, Waterbury, CT 06706. Representative: Hugh M. Joseloff, 80 State Street, Hartford, CT 06103. Authority sought to operate as a *common carrier,* by motor vehicle, over irregular routes, transporting: *General commodities,* (except commodities in bulk, household goods as defined by the Commission, classes A and B explosives, those of unusual value, and commodities which because of size or weight require the use of special equipment), between points in CT, NJ, and NY within 50 miles of the New York, NY commercial zone. (Hearing site: Hartford, CT or Washington, D.C.)

NOTE.—The purpose of this application is to eliminate the gateway of the New York, NY commercial zone. This is a matter directly related to a Section 5(2) proceedings in MC-F-13861F published in a previous section of this FEDERAL REGISTER issue.

MC 99902 (Sub-5F), filed December 19, 1978. Applicant: DAVE'S MOTOR TRANSPORTATION, INC., Logan International Airport, Boston, MA 02109. Representative: Kenneth B. Williams, 84 State Street, Boston, MA 02109. Authority sought to operate as a *common carrier,* by motor vehicle, over irregular routes, transporting: *General commodities* (except those of unusual value, classes A and B explosives, household goods as defined by the Commission, commodities in bulk, commodities requiring special equipment), between Logan International Airport, Boston, MA, on the one hand, and, on the other, Bradley Field, Windsor Locks, CT, LaGuardia and John F. Kennedy International Airports, New York, NY and Newark Airport, Newark, NJ. Restricted to the transportation of shipments having an immediately prior or subsequent movement by air. (Hearing site: Boston, MA.)

NOTE.—The purpose of this application is to eliminate the gateways of Windsor Locks, CT, and points in MA and CT within 50 miles of Windsor Locks and to tack applicant's present irregular route authority with the irregular route authority sought to be acquired in the Section 5 application at Boston, MA to provide a through service between points in RI and the airports in CT, NY and NJ, and is directly related to a finance proceeding docketed MC-F—13865F

published in a previous section of the FEDERAL REGISTER issue of January 11, 1979.

MC 126822 (Sub-53F), filed November 9, 1978. Applicant: WESTPORT TRUCKING COMPANY, a Corporation, 812 South Silver, Paola, Kansas 66071. Representative: Arthur J. Cerra, 2100 TenMain Center, P.O. Box 19251, Kansas City, Missouri 64141. Authority sought to operate as a *common carrier*, by motor vehicle, over irregular routes, transporting: *hides and pelts:*

(1) From points in IA. MN, MO. IN, OH, IL, TX, NE, MI, KS, NM, and WI to points in CA. (Gateways eliminated: Sedgwick County and Liberal, KS; Butler, MO; and Enid, OK.)

(2) From points in OH, MI, SD, IL, IN, MO, NM, OK, MN, TN, KY, ND, NE, KS, IA, and WI to points in TX. (Gateways eliminated: Sedgwick County and Liberal, KS; Butler, MO; and Muskogee and Enid, OK.)

(3) From points in TX, KS, TN, and NM to points in MN. (Gateways eliminated: Liberal and Sedgwick County, KS; Butler, MO; and Muskogee and Enid, OK.)

(4) From points in TX, OK, MO, CA, and NE to points in MI. (Gateways elimiated: Butler and Kansas City, MO, and Sedgwick County, KS.)

(5) From points in OK, SD, MO, MI, TX, and NY to Denver, CO. (Gateways eliminated: Butler, MO, and Liberal and Sedgwick County, KS.)

(6) From points in TX, KS, and MO to Chicago, IL. (Gateways eliminated: Sedgwick County, KS, and Kansas City and Springfield, MO.)

(7) From points in IA, WI, MN, MO, KS, NE, ND, and IN to New Orleans, LA (Gateways eliminated: Butler, MO, and Sedgwick County, KS.)

(8) From points in TX, NM, NE, KS, and CO to points in NY. (Gateways eliminated: Butler, Kansas City, and Springfield, MO and Enid, OK.)

(9) From points in TX, MO, NE, NM, and KS, to points in ME. (Gateways eliminated: Springfield and Kansas City, MO, and Muskogee, OK.)

(10) From points in TX to points in AZ, DE, OH, and OR. (Gateways eliminated: Liberal and Sedgwick County, KS, and Springfield and Butler, MO.)

(11) From points in TX, KS, NE, and MO to points in KY. (Gateways eliminated: Sedgwick County, KS, and Butler, MO.)

(12) From points in TX, CA, CO, NM, OK, KS, KY, MO, and LA to points in WI. (Gateways eliminated: Sedgwick County, KS; Springfield, Butler and Kansas City, MO; and Enid, OK.)

(13) From points in MO, TX, AZ, KS, and NE to points in MA. (Gateways eliminated: Enid, OK, and Kansas City and Springfield, MO.)

(14) From points in CO, MO, KS, and NE to points in NH. (Gateway eliminated: Kansas City, MO.)

(15) From points in ID, TX, NE, KS, MO, NM, and MN to points in TN. (Gateways eliminated: Enid, OK; Butler, MO; and Sedgwick County and Liberal, KS.)

(16) From points in KS to points in WA. (Gateways eliminated: Sedgwick County and Liberal, KS.)

(17) From points in IN, TX, and IL, to St. Joseph, MO. (Gateways eliminated: Butler, MO, and Sedgwick County, KS.)

(18) From points in MO, CO, and TX to points in PA. (Gateways eliminated: Butler, MO, and Sedgwick County, KS.)

(19) From points in MO and CO to points in WV. (Gateway eliminated: Butler, MO.)

(20) From points in IA to points in GA. (Gateways eliminated: Butler, MO, and Sedgwick County, KS.)

(21) From points in TX and MO to Newark, NJ. (Gateways eliminated: Sedgwick County, KS, and Butler, MO.)

(22) From points in WI to points in UT. (Gateways eliminated: Butler, MO, and Sedgwick County, KS.)

(23) From points in CO to points in VA. (Gateway eliminated: Butler, MO.) (Hearing site: Kansas City, MO.)

NOTE.—This gateway elimination application is directly related to finance proceedings docketed MC-F-13822F published in a previous section of this FEDERAL REGISTER issue.

MC 127303 (Sub-51F), filed December 15, 1978. Applicant: ZELLMER TRUCK LINES, INC., P.O. Box 343, Granville, IL 61326. Representative: E. Stephen Heisley, 805 McLachlen Bank Building, 666 Eleventh Street, NW, Washington, DC 20001. Authority sought to operate as a *common carrier*, by motor vehicle, over irregular routes, transporting (1) *dry fertilizer and fertilizer materials* (except liquid commodities in bulk), from the facilities of W. R. Grace & Co., at or near Henry, IL, to points in IA, IN, KY, MI, MN, MO, OH, and WI, and (2) *dry fertilizer, dry fertilizer materials, urea, and pesticides* (except liquid commodities in bulk), (a) from the facilities of W. R. Grace & Co., at or near Henry, IL, to points in OH, MI, KY, TN, IL, WI, MN, IA, MO, NE, KS, IN, AR, OK, ND, and SD, (b) from the facilities of W. R. Grace & Co., at or near Perry, IA, to points in MN, WI, NE, KS, and IL, (c) from the facilities of W. R. Grace & Co., at or near Lansing, MI, to points in OH, IN, and IL, (d) from the facilities of W. R. Grace & Co., at or near New Albany, IN, to points in OH, IL, KY, and TN, and (e) from the facilites of W. R. Grace & Co., at Columbus, OH, to points in MI, IN, IL, KY, and TN. (Hearing site: Memphis, TN.)

Note.—The purpose of this application is to convert permits to certificates of public convenience and necessity and is directly related matter to MC-F-13839F published in a previous section of this FEDERAL REGISTER issue.

MC 145979F, filed December 13, 1978. Applicant: CALIFORNIA EXPRESS, LTD., P.O. Box 756, 100 Beta Drive, Franklin, TN 37064. Representative: William J. Monheim, P.O. Box 1756, Whittier, CA 90609. Authority sought to operate as a *common carrier*, by motor vehicle, over irregular routes, transporting: *Chemicals, cleaning, scouring and washing compounds, plastic liquids and sheeting, ink, defoaming compounds, laminating machinery, laminating machinery parts, solvents, pallets and containers* between the facilities of Thiokol/Dynachem Corporation at or near Tustin, CA, on the one hand, and on the other, Woburn and South Hadley Falls, MA, Herndon, VA, Elmhurst, IL, Matthews, NC, Tampa, FL, and Detroit, MI. Restriction: Restricted against the transportation of commodities in bulk and further restricted to traffic originating at and destined to the named origins and destinations. This application is directly related to an application for approval of control, MC-F-13859F, published in a previous section of this FEDERAL REGISTER issue. (Hearing site: Los Angeles, CA.)

## MOTOR CARRIER ALTERNATE ROUTE DEVIATIONS

The following letter-notices to operate over deviation routes for operating convenience only have been filed with the Commission under the Deviation Rules—Motor Carrier of Passengers (49 CFR 1042.2(c)(9)).

Protests against the use of any proposed deviation route herein described may be filed with the Commission in the manner and form provided in such rules at any time, but will not operate to stay commencement of the proposed operations unless filed on or before February 20, 1979.

Each applicant states that there will be no significant effect on either the quality of the human environment or energy policy and conservation.

### MOTOR CARRIERS OF PASSENGERS

MC 61599 (Deviation No. 14), CONTINENTAL SOUTHEASTERN LINES, INC., 200 Spring St., N.W., Atlanta, GA 30343, filed December 4, 1978. Carrier proposes to operate as a *common carrier*, by motor vehicle, of *passengers, and their baggage*, and *express* and *newspapers* in the same vehicle with passengers, over deviation routes as follows: From Asheville, NC over Interstate Hwy 26 to junction US

Hwy 29, then over US Hwy 29 to Spartanburg, SC, with the following access routes: (1) From junction Interstate Hwy 26 and US Hwy 25, over US Hwy 25 to Hendersonville, NC, and (2) From junction Interstate Hwy 26 and US Hwy 64, over US Hwy 64 to Hndersonville, NC and return over the same routes for operating convenience only. The notice indicates that the carrier is presently authorized to transport passengers and the same property over a pertinent service route as follows: From Asheville, NC over NC Hwy 191 to Hendersonville, NC, then over US Hwy 176 to Spartanburg, SC, and return over the same route.

By the Commission.

H. G. HOMME, Jr.,
*Secretary.*

[FR Doc. 79-1688 Filed 1-17-79; 8:45 am]

---

[1505-01-M]

[Notice No. 732]

**ASSIGNMENT OF HEARINGS**

*Correction*

In FR Doc. 78-29821, appearing at page 49399, in the issue of Monday, October 23, 1978, make the following changes:

1. On page 49399, first column, under the heading, "MC 140995 (Sub-1TA) in the third line, "MI" should be corrected to read "MS"
2. On page 49399, first column, under the heading, "MC 140995 (Sub-1TA) in the fifth line, "MI" should be corrected to read "MS".
3. On page 49399, first column, under the heading, "MC 140995 (Sub-1TA) in the eleventh line, "MI" should be corrected to read "MS".

---

[1505-01-M]

[Decisions Volume No. 44]

**DECISION-NOTICE**

*Correction*

In FR Doc. 78-31973 appearing at page 52798 in the issue for Tuesday, November 14, 1978, on page 52802, in the third column, in the paragraph beginning "MC 107515", "(Sub-117F)" should be corrected to read "(Sub-1177F)".

---

[1505-01-M]

[Notice No. 213]

**MOTOR CARRIER TEMPORARY AUTHORITY APPLICATIONS**

*Correction*

In FR Doc. 78-32574 appearing at page 54159 in the issue for Monday, November 20, 1978, make the following corrections:

1. On page 54160, in the third column, in the paragraph beginning "MC 106644 (Sub-268TA)", in line eleven, "AK" should be corrected to read "AR".
2. On page 54161, in the second column, in the paragraph beginning "MC 111729 (Sub-747TA)", in line fourteen, "AR" should be corrected to read "AZ".

---

[1505-01-M]

[Notice No. 214]

**MOTOR CARRIER TEMPORARY AUTHORITY APPLICATIONS**

*Correction*

In FR Doc. 78-32575 appearing at page 54164 in the issue for Monday, November 20, 1978, on page 54164, in the third column, in the paragraph beginning "MC 29910 (Sub-193TA)", in the ninth line, "irregular" should be corrected to read "regular".

---

[1505-01-M]

[Notice No. 216]

**MOTOR CARRIER TEMPORARY AUTHORITY APPLICATIONS**

*Correction*

In FR Doc. 78-32702 appearing at page 54341 in the issue for Tuesday, November 21, 1978, the following corrections should be made:

1. On page 54345, in the third column, the paragraph beginning "MC 138274 (Sub-6TA)" should be corrected to begin "MC 138279 (Sub-6TA)".
2. On page 54347, in the first column, the paragraph beginning "MC 14506 (Sub-1TA)" should be corrected to begin "MC 145406 (Sub-1TA)".
3. On page 54347, in the second column, the paragraph beginning "MC 145541 (Sub-1TA)" should be corrected to begin "MC 145541TA".

---

[7035-01-M]

[No. MC-C-3437 (Sub-No. 7)]

**OPERATING RIGHTS AUTHORIZING SERVICE AT DESIGNATED AIRPORTS**

**Petition To Amend Interpretation**

AGENCY: Interestate Commerce Commission.

ACTION: Extension of time for filing public comments in this proceeding.

SUMMARY: This proceeding was instituted by a notice of petition for rulemaking published in the FEDERAL REGISTER on October 24, 1978, at 4[illegible] FR 49601. All interested parties were initially invited to file comments respecting the proposal on or before December 8, 1978.

That date was extended to February 1, 1979 because of the pendency of a decision in No. MC-C-3437, a proceeding with potential implications in the instant proceeding.

A decision in that proceeding was served on January 11, 1979. We believe that a further extension of time is necessary for interested parties to evaluate their positions and prepare comments.

DATES: Comments regarding the proposed rulemaking proceeding should be submitted to the Commission on or before March 1, 1979. No further extensions are contemplated.

FOR FURTHER INFORMATION CONTACT:

Michael Erenberg 202-275-7292.

By the Commission, Alan M. Fitzwater, Director, Office of Proceedings.

H. G. HOMME, Jr.,
*Secretary.*

[FR Doc. 79-1836 Filed 1-17-79; 8:45 am]

---

[7035-01-M]

[Service Order No. 1344; Revised I.C.C. Order No. 14]

**MICHIGAN NORTHERN RAILWAY CO. AND SOO LINE RAILROAD CO.**

**Rerouting Traffic**

In the opinion of Robert S. Turkington, Agent, the Michigan Northern Railway Company (MN) is unable to receive traffic from the Soo Line Railroad Company at St. Ignace-Mackinaw City, Michigan, and is unable to transport traffic presently on its line because of disrupted train operations on the MN caused by heavy snow and a shortage of locomotives.

*It is ordered,* (a) *Rerouting traffic.* The Soo Line Railroad Company (Soo) being unable to deliver traffic to the Michigan Northern Railway Company (MN) and the MN being unable to transport traffic because of disrupted train operations on the MN caused by heavy snow and a shortage of locomotives, these lines are directed to divert or reroute such traffic over any available route to expedite the movement. Traffic necessarily diverted by authority of this order shall be rerouted so as to preserve as nearly as possible the participation and revenues of other carriers provided in the original routing. The billing covering all such cars rerouted shall carry a reference to this order as authority for the rerouting.

(b) *Acceptance of rerouted cars required.* Any railroad named in the original routing is required to accept

and transport cars rerouted or diverted by the Soo Line Railroad or Michigan Northern Railway in accordance with the requirements of this order.

(c) *Notification to shippers.* Each carrier rerouting cars in accordance with this order, shall notify each shipper at the time each shipment is rerouted or diverted and shall furnish to such shipper the new routing provided under this order.

(d) Inasmuch as the diversion or rerouting of traffic is deemed to be due to carrier disability, the rates applicable to traffic diverted or rerouted by said Agent shall be the rates which were applicable at the time of shipment on the shipments as originally routed.

(e) In executing the directions of the commission and of such Agent provided for in this order, the common carriers involved shall proceed even though no contracts, agreements, or arrangements now exist between them with reference to the divisions of the rates of transportation applicable to said traffic. Divisions shall be, during the time this order remains in force, those voluntarily agreed upon by and between said carriers, or upon failure of the carriers to so agree, said divisions shall be those hereafter fixed by the Commission in accordance with pertinent authority conferred upon it by the Interstate Commerce Act.

(f) *Effective date.* This order shall become effective at 4:00 p.m., January 5, 1979.

(g) *Expiration date.* This order shall expire at 11:59 p.m., January 10, 1979, unless otherwise modified, changed or suspended.

This order shall be served upon the Association of American Railroads, Car Service Division, as agent of all railroads subscribing to the car service and car hire agreement under the terms of that agreement, and upon the American Short Line Railroad Association. A copy of this order shall be filed with the Director, Office of the Federal Register.

Issued at Washington, D.C., January 5, 1979.

INTERSTATE COMMERCE COMMISSION,
ROBERT S. TURKINGTON,
*Agent.*

[FR Doc. 79-1832 Filed 1-17-79; 8:45 am]

---

[7035-01-M]

[Notice No. 148]

## MOTOR CARRIER BOARD TRANSFER PROCEEDINGS

The following publications include motor carrier, water carrier, broker, and freight forwarder transfer applications filed under section 212(b), 206(a), 211, 312(b), and 410(g) of the Interstate Commerce Act.

Each application (except as otherwise specifically noted) contains a statement by applicants that there will be no significant effect on the quality of the human environment resulting from approval of the application.

Protests against approval of the application, which may include request for oral hearing, must be filed with the Commission on or before February 20, 1979. Failure seasonably to file a protest will be construed as a waiver of opposition and participation in the proceeding. A protest must be served upon applicants' representative(s), or applicants (if no such representative is named), and the protestant must certify that such service has been made.

Unless otherwise specified, the signed original and six copies of the protest shall be filed with the Commission. All protests must specify with particularity the factual basis, and the section of the Act, or the applicable rule governing the proposed transfer which protestant believes would preclude approval of the application. If the protest contains a request for oral hearing, the request shall be supported by an explanation as to why the evidence sought to be presented cannot reasonably be submitted through the use of affidavits.

The operating rights set forth below are in synopses from, but are deemed sufficient to place interested persons on notice of the proposed transfer.

MC-FC-77905, filed October 24, 1978. Transferee: Dreisbsch Enterprises, Inc., 8451 San Leandro St., Oakland, CA 94603. Transferor: Penguin Trucking Co., Inc., 2045 East Vernon Ave., Los Angeles, CA 90058. Representative: Eldon M. Johnson, Attorney at Law, 650 California St., Suite 3808, San Francisco, CA 94108. Authority sought for purchase by transferee of the entire operating rights of transferor as set forth in Certificate No. MC-65115, issued July 9, 1971, and portion of operating rights in Certificate of Registration 98886 Sub 2 issued October 26, 1973, to Alco Transportation Co., and portion of Certificate of Registration No. MC-120936 Sub 1 issued October 1, 1974, to Alco Fast Freight, Inc., and acquired by transferor pursuant to approval and consummation of the transfer proceeding in MC-F-12741, as follows: MC-65115: Agricultural commodities, from points in Los Angeles and Orange Counties, CA, to Los Angeles Harbor, CA, commercial fertilizer, from Los Angeles Harbor, CA, to points in Los Angeles and Riverside Counties, CA, general commodities (with certain exceptions), between Los Angeles, CA, and Los Angeles Harbor Commercial Zone as defined by the Commission, to Colton and San Diego, CA. MC-98886 Sub 2: Commodities requiring the use of special refrigeration or temperature control in specially designed and constructed refrigerator equipment, between points in specified areas and territories in California, with certain restrictions; and MC-120936 Sub 1: Commodities requiring the use of special refrigeration or temperature control in specially designed and constructed refrigerator equipment, between points in specified areas and territories in California, with certrain restrictions. Transferee presently holds no authority from this Commission. Application has not been filed for temporary authority under section 210a(b).

MC-FC-77922, filed November 6, 1978. Transferee: James Mulvihill, Patricia Carrell, Donna McMahon, Robert, Michael and Kevin Mulvihill, 2607 Cravey Drive, NE., Atlanta, GA 30345. Transferor: Thompson Travel Bureau, 625 Lackawanna Ave., Scranton, PA 18503. Authority sought for control by transferees through the purchase of capital stock of the operating rights of transferor as set forth in License No. MC 12681, issued December 12, 1958, authorizing the transportation of passengers and their baggage, between points in the United States and authorizing operations as a broker at Scranton and Philadelphia, PA and Binghamton, Rochester, and Syracuse, NY.

MC-FC-77925, filed November 6, 1978. Transferee: H & K Transport Co., Inc., Rt. 2, Box 2087-X, Wenatchee, WA 98801. Transferor: Brader Hauling Service, Inc., P.O. Box 655, Zillah, WA 98953. Applicants' Representative: Larry Brader, President, Brader Hauling Service, Inc., P.O. Box 655, Zillah, WA 98953. Applicants' Representative: Charles C. Flower, Suite 2, Yakima Legal Center, 303 East "D" Street, Yakima, WA 98901. Authority sought for purchase by transferee of the operating rights of transfer as set forth in Permit No. MC-124658 (Sub-No. 2) issued June 30, 1969, as follows: Orchard heaters and parts and accessories thereof, from Upland and Cucamonga, CA to points in Wasco, Sherman, Hood River, Union, and Baker Counties, OR, and that part of Washington lying east of the summit of the Cascade Mountain Range, restricted to a transportation service to be performed under a continuing contract with Scheu Products Company of Upland, CA. Application has not been filed for temporary authority under Section 210a(b).

MC-FC-77947, filed December 6, 1978. Transferee: Twin City Trucking, Inc., 57 Cathy Street, Fitchburg, MA 01420. Transferor: Furniture Warehouse, Inc., 323 Speen Street, Natick,

MA 01760. Applicants' Representative: Frank J. Weiner, 15 Court Square, Boston, MA 02108. Authority sought for purchase by transferee of the operating rights of transferor as set forth in Certificate of Registration No. MC-39339 (Sub-No. 2), issued October 23, 1967, as corrected March 12, 1968, authorizing the transportation of general commodities anywhere in the Commonwealth of Massachusetts. Transferee presently holds no authority from this Commission. Application has not been filed for temporary authority under Section 210a(b).

MC-FC-77956, filed December 12, 1978. Transferee: Ohio Movers and Storage, Inc., 9420 Sandusky Ave., Cleveland, OH 44105. Transferor: The Schott-Geise Moving & Cartage Company, 9420 Sandusky Ave., Cleveland, OH 44105. Applicants' Representative: Richard H. Brandon, Attorney at Law, 220 West Bridge St., P.O. Box 97, Dublin, OH 43107. Authority sought for purchase by transferee of the operating rights of transferor, as set forth in Certificate No. MC-79678, issued September 26, 1940, as follows: *Household goods,* over irregular routes, between points and places in Cuyahoga County, Ohio, on the one hand, and, on the other, points and places in Illinois, Indiana, Michigan, Pennsylvania, and Wisconsin, traversing West Virginia for operating convenience only. Transferee presently holds no authority from this Commission. Application has not been filed for temporary authority under Section 210a(b).

H. G. HOMME, Jr.,
*Secretary.*

[FR Doc. 79-1835 Filed 1-17-79; 8:45 am]

---

[7035-01]

[Notice No. 4]

## MOTOR CARRIER TEMPORARY AUTHORITY APPLICATIONS

JANUARY 8, 1979.

The following are notices of filing of applications for temporary authority under Section 210a(a) of the Interstate Commerce Act provided for under the provisions of 49 CFR 1131.3. These rules provide that an original and six (6) copies of protests to an application may be filed with the field official named in the FEDERAL REGISTER publication no later than the 15th calendar day after the date the notice of the filing of the application is published in the FEDERAL REGISTER. One copy of the protest must be served on the applicant, or its authorized representative, if any, and the protestant must certify that such service has been made. The protest must identify the operating authority upon which it is predicated, specifying the "MC" docket and "Sub" number and quoting the particular portion of authority upon which it relies. Also, the protestant shall specify the service it can and will provide and the amount and type of equipment it will make available for use in connection with the service contemplated by the TA application. The weight accorded a protest shall be governed by the completeness and pertinence of the protestant's information.

Except as otherwise specifically noted, each applicant states that there will be no significant effect on the quality of the human environment resulting from approval of its application.

A copy of the application is on file, and can be examined at the Office of the Secretary, Interstate Commerce Commission, Washington, D.C., and also in the ICC Field Office to which protests are to be transmitted.

NOTE.—All applications seek authority to operate as a common carrier over irregular routes except as otherwise noted.

### MOTOR CARRIERS OF PROPERTY

MC 29910 (Sub-201TA), filed December 13, 1978. Applicant: ARKANSAS-BEST FREIGHT SYSTEM, INC., 301 South Eleventh Street, Fort Smith, AR 72901. Representative: Joseph K. Reber, 301 South Eleventh Street, Fort Smith, AR 72901. Authority sought to operate as a *common carrier,* by motor vehicle, over regular routes, transporting: *General commodities* (except those of unusual value, classes A and B explosives, household goods as defined by the Commission, commodities in bulk, and those requiring special equipment), serving the facilities of A. M. General Corporation, at or near Marshall and Wildlawn, TX., as off-route points in connection with applicant's authorized regular route operations at Shreveport, LA. (ABF's authority to serve Shreveport, LA., is found on Page 3, Lines 64-68 and Page 4, Lines 31-34 of its operating authority attached hereto), for 180 days. An underlying ETA seeks up to 90 days authority. SUPPORTING SHIPPER(S): A. M. General Corporation, P.O. Box 1779, Marshall, TX 75670. SEND PROTESTS TO: William H. Land, Jr., DS, 3108 Federal Office Building, 700 West Capitol, Little Rock, AR 72201.

MC 56244 (Sub-69TA), filed December 1, 1978. Applicant: KUHN TRANSPORTATION COMPANY, INC., P.O. Box 98, R. D. #2, Gardners, PA 17324. Representative: John M. Musselman, Rhoads, Sinon & Hendershot, P.O. Box 1146, 410 North Third Street, Harrisburg, PA 17108. *Canned and preserved foodstuffs* (except commodities in bulk, and frozen foods), from the facilities of National Fruit Products Company, Inc., and Shenandoah Apple Co-Operative, Inc., at Winchester, VA, to points in KY and OH, restricted to the transportation of shipments originating at said facilities and destined to the points named, for 180 days. SUPPORTING SHIPPER(S): (1) National Fruit Product Company, Inc., P.O. Box 2040, Winchester, VA 22601. (2) Shenandoah Apple Co-Operative, Inc., P.O. Box 435, Winchester, VA. SEND PROTESTS TO: Charles F. Myers Trans., Specialist, ICC, P.O. Box 869 Federal Square Station, 228 Walnut Street, Harrisburg, PA 17108.

MC 59098 (Sub-11TA), filed December 5, 1978. Applicant: KNAPP'S EXPRESS, INC., 37 Emerson Street, Ridgefield Park, NJ 07660. Representative: George A. Olsen, P.O. Box 357, Gladstone, NJ 08934. *Carpet and carpeting,* from the facilities of Galaxy Carpet Mills, Mt. Laurel, NJ., to points in New York, NY., for 180 days. An underlying ETA seeks up to 90 days authority. SUPPORTING SHIPPER(S): Galaxy Carpet Mills, Inc., 112B Gaither Drive, Mt. Laurel, NJ. SEND PROTESTS TO: Joel Morross DS, ICC, 9 Clinton Street, Newark, NJ 07102.

MC 71652 (Sub-23TA), filed November 28, 1978. Applicant: BYRNE TRUCKING, INC., 4669 Crater Lake Highway, P.O. Box 280, Medford, OR 97501. Representative: William D. Taylor, Handler, Baker & Greene, 100 Pine Street, Suite 2550, San Francisco, CA 94111. *Iron and steel articles,* as described in Appendix V in Ex Parte MC-45, 61 M.C.C. 209, between the plant site of Metra Steel, at or near Portland, OR, and points in the state of CA., for 180 days. An underlying ETA seeks up to 90 days authority. SUPPORTING SHIPPER(S): Metra Steel, 5851 N. Lagoon, Swan Island, Portland, OR 97208. SEND PROTESTS TO: A. E. Odoms DS, 114 Pioneer Courthouse, 555 S.W., Yamhill Street, Portland, OR 97204.

MC 78687 (Sub-53TA), filed December 11, 1978. Applicant: LOTT MOTOR LINES, INC., West Cayuga Street, P.O. Box 751, Moravia, NY 13118. Representative: E. Stephen Heisley, 805 McLachlen Bank Building, 666 Eleventh Street NW., Washington, D.C. 20001. *Sulfate of Ammonia,* in bulk, in dump vehicles, from Bethlehem, PA to Big Flats and Lyons, NY for 180 days. SUPPORTING SHIPPER(S): Agway Inc., Fertilizer Division, P.O. Box 4933, Syracuse, NY 13221. SEND PROTESTS TO: Interstate Commerce Commission, U.S. Courthouse & Federal Bldg., Room 1259, 100 South Clinton Street, Syracuse, NY 13260.

MC 85811 (Sub-10TA), filed December 14, 1978. Applicant: AMSCO TRANSPORTATION, INC., 10560

Mykawa Road, P.O. Box 33280, Houston, TX 77033. Representative: J. G. Dail, Jr., P.O. Box LL, McLean, VA 22101. *Iron and steel articles*, from Kansas City, MO., and commercial zone to points in Arkansas, Louisiana, New Mexico, Oklahoma and TX., for 180 days. An underlying ETA seeks up to 90 days authority. SUPPORTING SHIPPER(S): (1) ARMCO, INC., 703 Curtis Street, Middletown, OH 45043. (2) Butler Manufacturing Co., 7400 E. 13th Street, Kansas City, MO 64126. (3) TRICO IND., INC., Columbian Steel Tank Division, 5400 Kansas Avenue, Kansas City, KS. SEND PROTESTS TO: John F. Mensing DS, 8610 Federal Building, 515 Rusk Avenue, Houston, TX 77002.

MC 95540 (Sub-1066TA), filed December 5, 1978. Applicant: WATKINS MOTOR LINES, INC., 1144 West Griffin Road, P.O. Box 1636, Lakeland, FL 33802. Representative: Benjy W. Fincher, 1144 West Griffin Road, P.O. Box 1636, Lakeland, FL 33802. *Plastic film or sheeting, other than cellulose*, (in vehicles equipped with mechanical refrigeration), (1) between Griffin, GA and Andover, MA., on the one hand, and, on the other, points in FL, and; (2) between Griffin, GA, on the one hand, and, on the other, Andover, MA., for 180 days. There is no environmental impact involved in this application. An underlying ETA seeks up to 90 days authority. SUPPORTING SHIPPER(S): Borden Chemical Div., of Borden, Inc., 1 Clark Street, North Andover, MA 10845. SEND PROTESTS TO: Donna M. Jones Trans. Asst., ICC, Monterey Building, Suite 101, 8410 N.W., 53rd Terrace, Miami, FL 33166.

MC 107295 (Sub-898TA), filed December 13, 1978. Applicant: PRE-FAB TRANSIT CO., P.O. Box 146, Farmer City, IL 61842. Representative: Duane Zehr (same address as applicant). *Lumber and lumber products*, from Ashland, MT., to points in Illinois, Iowa, Minnesota and WI., for 180 days. An underlying ETA seeks up to 90 days authority. SUPPORTING SHIPPER(S): Richard E. Harmer V.P., Andersonia Forest Products, Inc., P.O. Box 4240, Arcata, CA 95521. SEND PROTESTS TO: Charles D. Little DS, ICC, 414 Leland Office Building, 527 East Capitol Avenue, Springfield, IL 62701.

MC 109818 (Sub-36TA), filed December 6, 1978. Applicant: WENGER TRUCK LINE, INC., 3909 West Rusholme, P.O. Box 3427, Davenport, IA 52804. Representative: Larry D. Knox, 600 Hubbell Building, Des Moines, IA 50309. *Foodstuffs and nonedible food products*, (except commodities in bulk), from the facilities of Termicold Corporation at or near Bettendorf, IA, to points in Ohio, Kentucky, Michigan and IN., for 180 days. An underlying ETA seeks up to 90 days authority. SUPPORTING SHIPPER(S): Termicold Corporation, 1618 S.W., First Avenue, Portland, OR 97201. SEND PROTESTS TO: Herbert W. Allen DS, ICC, 518 Federal Building, Des Moines, IA 50309.

MC 111231 (Sub-251TA), filed December 5, 1978. Applicant: JONES TRUCK LINES, INC., 610 East Emma Avenue, Springdale, AR 72764. Representative: Don A. Smith, P.O. Box 43, Fort Smith, AR 72902. *Asbestos roofing or siding, building wallboard, and roofing insulation*, from the facilities of G.A.F. Corporation at or near St. Louis, MO., to all points in Alabama, Arkansas, Illinois, Louisiana, Mississippi, Oklahoma, Tennessee and TX., restricted to traffic originating at the facilities of G.A.F., Corporation, for 180 days. SUPPORTING SHIPPER(S): GAF Corporation, 1361 Alps Road, Wayne, NJ 07470. SEND PROTESTS TO: William H. Land, Jr., DS, 3108 Federal Office Building, 700 West Capitol, Little Rock, AR 72201.

MC 111548 (Sub-12 TA), filed December 6, 1978. Applicant: SHARPE MOTOR LINES, INC., P.O. Box 517, Hildebran, NC 28637. Representative: Edward G. Villalon, 1032 Pennsylvania Building, Pa., Ave., 13th Street, N.W., Washington, DC 20004. *Furniture and furniture parts*, (1) from points in Iredell, Cleveland and Alexander Counties, NC, to points in Illinois, Indiana, Michigan and OH; (2) from points in Wilkes County, NC, to points in Illinois, Indiana, and MI; (3) from the facilities of Broyhill Furniture Industries at or near Rutherfordton, NC, to points in IL and NH, for 180 days. An underlying ETA seeks up to 90 days authority. SUPPORTING SHIPPER(S): There are approximately (19) statements of support attached to this application which may be examined at the Interstate Commerce Commission in Washington, DC, or copies thereof which may be examined at the field office named below. SEND PROTESTS TO: Terrell Price DS, 800 Briar Creek Road, Room, CC516, Mart Office Building, Charlotte, NC 28205.

MC 112223 (Sub-118 TA), filed December 6, 1978; Applicant: QUICKIE TRANSPORT COMPANY, 1700 New Brighton Boulevard, Minneapolis, MN 55413. Representative: Earl Hacking 1700 New Brighton Boulevard, Minneapolis, MN 55413. *Petroleum Products*, (in bulk, in tank vehicles), from Superior, WI, to points in Itasca, Lake, Cook, and St. Louis Counties, MN, for 180 days. An underlying ETA seeks up to 90 days authority. SUPPORTING SHIPPER(S): There are approximately (8) statements of support attached to this application which may be examined at the Interstate Commerce Commission in Washington, DC, or copies thereof which may be examined at the field office named below. SEND PROTESTS TO: Delores A. Poe Trans. Asst., ICC, 414 Federal Building & U.S. Court House, 110 South 4th Street, Minneapolis, MN. 55401.

MC 113666 (Sub-143 TA), filed December 4, 1978. Applicant: FREE PORT TRANSPORT, INC. 1200 Butler Road, Freeport, PA 16229. Representative: Daniel R. Smetanick (Same address as applicant). *Soy bean meal*, (in bulk, in tank vehicles), from Louisville, KY, to Pearl River, NY, for 180 days. An underlying ETA seeks up to 90 days authority. SUPPORTING SHIPPER(S): Lederle Laboratories, division of American Cyanamid Co., Pear River, NY. SEND PROTESTS TO: John England DS, ICC, 2111 Federal Bldg., 1000 Liberty Avenue, Pittsburgh, PA 15222

MC 115496 (Sub-110 TA), filed December 5, 1978. Applicant: LUMBER TRANSPORT, INC., P.O. Box 111, Highway 23 South, Cochran, GA 31014. Representative: Virgil H. Smith, 1587 Phoenix Boulevard, Suite 12, Atlanta, GA 30349. *Lumber, plywood, particleboard, wallboard, composition board, and paneling*, from the facilities of Plywood Panels, Inc., at New Orleans, LA, to points in Georgia, Alabama, Florida, Tennessee, Kentucky, Ohio, Virginia, North Carolina and SC, for 180 days. SUPPORTING SHIPPER(S): Plywood Panels, Inc., P.O. Box 435, New ORLEANS, LA 70175. SEND PROTESTS TO: Sara K. Davis Trans., Asst., ICC, 1252 W. Peachtree Street, N.W., Room 300, Atlanta, GA 30309.

MC 115841 (Sub-657 TA), filed December 5, 1978. Applicant: COLONIAL REFRIGERATED TRANSPORTATION, INC., 9041 Executive Park Drive, Suite 110, Building 100, Knoxville, TN 37919. Representative: D. R. Beeler (same address as applicant). *Charcoal briquets*, from the facilities utilized by Husky Industries located at or near Meridian and Pachuta, MS., to points in the states of Alabama, Oklahoma, Texas, Louisiana, Tennessee, Georgia, Florida, North Carolina and South Carolina, for 180 days. An underlying ETA seeks up to 90 days authority. SUPPORTING SHIPPER(S): Husky Industries, Inc., 62 Perimeter Center East, Atlanta, GA. SEND PROTESTS TO: Glenda Kuss Trans., Asst., ICC, Suite A-422, U.S. Court House, 801 Broadway, Nashville, TN. 37203.

MC 116004 (Sub-53 TA), filed December 5, 1978. Applicant: TEXAS OKLAHOMA EXPRESS, INC., P.O. Box 47112, Dallas, Texas 75247. Representative: Doris Hughes, P.O. Box 47112, Dallas, Texas 75247. Authority sought to operate as a *common carrier*, by motor vehicle, over regular

routes transporting *general commodities,* (except those of unusual value, Classes A & B Explosives, Household Goods as defined by the Commission, commodities in bulk and those requiring special equipment), BETWEEN Dallas, TX, and its commercial zone, on the one hand, and, on the other, Houston, TX, and its commercial zone, serving no intermediate points: From Dallas, TX over I.S. Hwy. 45 (or U.S. Hwy. 75) to Houston, TX and return over the same route, in connection with carrier's present regular route operations for 180 days. Tacking is requested at Dallas, TX and interlining at Houston, TX. There are approximately 214 Support Appendices. Send protests to: Opal M. Jones, Transportation Assistant, Interstate Commerce Commission, 1100 Commerce Street, Room 13C12, Dallas, TX 75242.

MC 117786 (Sub-42 TA), filed December 5, 1978. Applicant: RILEY WHITTLE, INC., P.O. Box 19038, Phoenix, AZ 85009. Representative: Thomas F. Kilroy, Suite 406, Executive Building, 6901 Old Keene Mill Road, Springfield, VA 22150. *Paper labels and tags, and equipment, materials, and supplies* used in the printing and distribution of paper labels and tags, from the facilities of Monarch Marking Systems at or near Dayton, OH to all points in Alabama, Arkansas, Georgia, Louisiana, Mississippi, Oklahoma and TX., for 180 days. SUPPORTING SHIPPER(S): Monarch Marking Systems, P.O. Box 698, Dayton, OH 45401. SEND PROTESTS TO: Andrew V. Baylor DS, ICC, Room 2020 Federal Building, 230 N. First Avenue, Phoeniz, AZ 85025.

MC 119399 (Sub-88 TA), filed December 4, 1978. Applicant: CONTRACT FREIGHTERS, INC., 2900 Davis Boulevard, Joplin, MO 64801. Representative: Dean Williamson, 280 National Foundation Life Bldg., Oklahoma City, OK 73112. *Automotive parts and materials and supplies* used in the manufacture of automotive parts, between the facilities of Ford Motor Company in the State of Michigan, on the one hand, and, on the other, St. Louis, MO, Kansas City, MO and St. Paul, MN., for 180 days. An underlying ETA seeks up to 90 days authority. SUPPORTING SHIPPER(S): Ford Motor Company, One Parklane Blvd., Parklane Towers East, Suite 200, Dearborn, MI 48126. SEND PROTESTS TO: John V. Barry DS, ICC, 600 Federal Building, 911 Walnut Street, Kansas City, MO 64106.

MC 119569 (Sub-8TA), filed December 6, 1978. Applicant: HALBERG CONSTRUCTION AND SUPPLY, INC., d.b.a. KIRSCHER TRANSPORT CO., Virginia, MN 55792. Representative: Earl Hacking, 1790 New Brighton Blvd., Minneapolis, MN 55413. *Petroleum products,* (in bulk, in tank vehicles), from Superior, WI., to points in Itasca, Lake, Cook, and St. Louis, Counties MN., for 180 days. An underlying ETA seeks up to 90 days authority. SUPPORTING SHIPPER(S): There are approximately (9) statements of support attached to this application which may be examined at the Interstate Commerce Commission in Washington, D.C., or copies thereof which may be examined at the field office named below. SEND PROTESTS TO: Delores A. Poe Trans. Asst., 414 Federal Building & U.S. Court House, 110 South 4th Street, Minneapolis, MN 55401.

MC 119726 (Sub-151TA), filed December 1, 1978. Applicant: N.A.B. TRUCKING CO., INC., 1644 W. Edgewood Avenue, Indianapolis, IN 46217. Representative: James L. Beattey, 130 E. Washington Street, Suite 1000, Indianapolis, IN 46204. *Paper products,* from the facilities of Western Kraft, Inc., at Cmpti, LA., to Memphis, TN.; St. Louis, MO, Bridgeview, Streator, Montgomery, Elk Grove, Mt. Olive, and Alton, IL, Indianapolis, and Crawfordsville, IN; Bowling Green and Louisville, KY; Milan, MI; Circleville, Delaware, and Middletonn, OH; Pittsburg, PA; Riegelsville and Bellmawr, NJ, and Huntington, WV., for 180 days. An underlying ETA seeks up to 90 days of authority. SUPPORTING SHIPPER(S): Western Kraft Paper Group, Williamette Industries, Inc., 3700 First Nat'l Bank Tower, Portland, OR 97201. SEND PROTESTS TO: Beverly J. Williams Trans., Asst., ICC, Federal Building & U.S. Courthouse, 46 East Ohio St., Room 429, Indianapolis, IN 46204.

MC 119988 (Sub-176TA), filed December 4, 1978. Applicant: GREAT WESTERN TRUCKING CO., INC., P.O. Box 1384, Highway 103 East, Lufkin, TX 75901. Representative: Paul D. Angenend, 1806 Rio Grande, P.O. Box 2207, Austin, TX 78768. *Paper and paper articles,* from (1) the plantsite for International Paper Company located at or near Mobile, AL and Moss Point, MS., to AZ., and CA, and; (2) from the plantsite of International Paper Company located at or near Bastrop, LA., to CA., for 180 days. SUPPORTING SHIPPER(S): International Paper Co., P.O. Box 160707, Mobile, AL 36616. SEND PROTESTS TO: John F. Mensing DS, 8610 Federal Building, 515 Rusk Avenue, Houston, TX 77002.

MC 123361 (Sub-8TA), filed December 13, 1978. Applicant: CANTWELL MOTOR SERVICE, INC., 1718 Pontiac Road, East St. Louis, IL 62203. Representative: Ernest A. Brooks, II, 1301 Ambassdor Building, St. Louis, MO 63101. *Meats,* between the facilities of Holten's Wholesale Meats, Inc., at East St. Louis, IL., on the one hand, and, on the other, points in Minnesota, Wisconsin, Kentucky, Indiana and IA., for 180 days. An underlying ETA seeks up to 90 days authority. SUPPORTING SHIPPER(S): James Holten President, Holten's Wholesale Meats, Inc., 919 Lynch Avenue, East St. Louis, IL 62201. SEND PROTESTS TO: Charles D. Little DS, ICC, 414 Leland Office Building, 527 East Capitol Avenue, Springfield, IL 62701.

MC 123407 (Sub-513TA), filed December 7, 1978. Applicant: SAWYER TRANSPORT, INC., South Haven Square, U.S. Highway 6, Valparaiso, IN 46383. Representative: H. E. Miller, Jr. (same address as applicant). *Lumber, lumber products, wood products, and millwork* from OR to CA, for 180 days. Applicant has also filed an underlying ETA seeking authority up to 90 days. Supporting shipper: Merrill Lynch, Wood Markets, Inc., 840 Crown Plaza Bldg., Portland, OR 97201. Send protests to: Lois Stahl, Transportation Asst., I.C.C., Everett McKinley Dirksen Bldg., Rm 1386, 219 S. Dearborn St., Chicago, IL 60604.

MC 124170 (Sub-108TA), filed December 8, 1978. Applicant: FROSTWAYS, INC., 3000 Chrysler Service Drive, Detroit, MI 48207. Representative: William J. Boyd, WILLIAM J. BOYD, P.C., 600 Enterprise Drive, Suite 222, Oak Brook, IL 60521. *"Canned and Preserved Foodstuffs,* From the facilities of Heinz U.S.A., Division of H. J. Heinz Co. at or near Pittsburgh, PA to points in AR, OK and TX, restricted to traffic originating at the named facilites and destined to the named destination.," for 180 days. SUPPORTING SHIPPER(S): Heinz U.S.A., Division of H. J. Heinz Company, P.O. Box 57, Pittsburgh, PA 15230. SEND PROTESTS TO: Tim Quinn DS, ICC, 604 Federal Building and U.S. Courthouse, 231 West Lafayette Blvd., Detroit, MI 48226.

MC 124896 (Sub-79TA), filed December 6, 1978. Applicant: WILLIAMSON TRUCK LINES, INC., Corner Thorne & Ralston Streets, Wilson, NC 27893. Representative: Jack H. Blanshan, 205 West Touhy Avenue, Suite 200, Park Ridge, IL 60068. *Refrigeration equipment* designed to be installed on motor vehicles and components therefor, from Charleston, SC and/or Louisville, GA, to Atlanta, GA, and/or Raleigh, NC and/or Wilson, NC., and from Atlanta, GA and/or Raleigh, NC, and/or Wilson, NC to Lousiville, GA and/or Charleston, SC., for 180 days. An underlying ETA seeks up to 90 days authority. SUPPORTING SHIPPER(S): (1) Thermo-King of Wilson, Inc., P.O. Box 3565, Wilson, NC 27893. (2) Thermo-King of Raleigh, Inc., Raleigh, NC 27611. (3) Thermo-King of Atlanta, Inc., 1082 Huff Road, N.W.,

Atlanta, GA 30318. SEND PROTESTS TO: Archie W. Andrews DS, ICC, P.O. Box 26896, Raleigh, NC 27611.

MC 125049 (Sub-5TA), filed December 5, 1978. Applicant: TROINA TRUCKING COMPANY, INC., 24 Entwistle Avenue, Nutley, NJ 07110. Representative: Norman Weiss, Bowes, Millner, Rodgers, Liberstein & Werner, 167 Fairfield Road; P.O. Box 1409, Fairfield, NJ 07006. Authority sought to operate as a *contract carrier*, by motor vehicle, over irregular routes, transporting: *Automobile parts and tools* used in the installation of automobile parts, from Oceanside, NY., to New York, NY, points in Nassau, Suffolk, Rockland and Westchester Counties, NY, points in Bucks, Chester, Delaware, Lehigh, Monroe, Montgomery, Northampton and Philadelphia Counties, PA, and points in CT and NJ, under a continuing contract or contracts, with Questor Corporation and its subsidiaries or divisions, for 180 days. An underlying ETA seeks up to 90 days authority. SUPPORTING SHIPPER(S): Questor Corporation, 1 John Goerlich Square, Toledo, OH. SEND PROTESTS TO: Joel Morrows DS, ICC, 9 Clinton Street, Newark, NJ 07102.

MC 125470 (Sub-38TA), filed December 6, 1978. Applicant: MOORE'S TRANSFER, INC., P.O. Box 1151, Norfolk, NE 68701. Representative: Gailyn L. Larsen, 521 South 14th Street, P.O. Box 81849, Lincoln, NE 68501. *Limestone and gypsum*, from points in Marion County, IA., to points in Nebraska, Illinois, Missouri, Wisconsin, North Dakota, South Dakota, Arkansas, Kansas, Oklahoma, Texas, Colorado and MN, for 180 days. An underlying ETA seeks up to 90 days authority. SUPPORTING SHIPPER(S): American Pelletizing Corp., Marvin T. Zelibor President, P.O. Box 3628, Des Moines, IA 50322. SEND PROTESTS TO: Carroll Russell DS, ICC, Suite 620, 110 North 14th St., Omaha, NE 68102.

MC 125535 (Sub-11TA), filed December 1, 1978. Applicant: JOHN SHARP TRUCKING COMPANY, INC., 12015 Manchester Road, Suite 118, St. Louis, MO 63131. Representative: Donald S. Helm (same address as applicant). Authority sought to operate as a *contract carrier*, by motor vehicle, over irregular routes, transporting: *Cooling rooms, cooling or freezing machines, evaporators, counters, shelving and hardware, and commodities* used in the manufacture and distribution of such commodities, (except commodities in bulk, in tank vehicles), between the facilities of Hussmann Refrigerator at Bridgeton, MO, on the one hand, and on the other, points in the United States in and east of Kansas, Nebraska, North Dakota, Oklahoma, South Dakota, and TX., under a continuing contract or contracts, with Hussmann Refrigerator Co., for 180 days. An underlying ETA seeks up to 90 days authority. SUPPORTING SHIPPER(S): Hussmann Refrigerator Company, 1299 St. Charles Rock Road, Bridgeton, MO 63004. SEND PROTESTS TO: P. E. Binder DS, ICC, Room 1465, 210 N. 12th Street, St. Louis, MO 63101.

MC 12655 (Sub-62TA), filed December 5, 1978. Applicant: UNIVERSAL TRANSPORT, INC., P.O. Box 3000, Rapid City, SD 57709. Representative: Barry C. Burnette, P.O. Box 3000, Rapid City, SD 57709. *Bentonite*, (in bulk, in tank vehicles), From Colony, WY., to points in the United States, (except Hawaii), for 180 days. SUPPORTING SHIPPER(S): International Minerals & Chemical Corp., 421 E. Hawley Street, Mundelein, IL 60060 (Bruce W. Nied Traffic Research Analyst-Motor) SEND PROTESTS TO: J. L. Hammond DS, ICC, Room 455, Federal Building, Pierre, SD 57501.

MC 133655 (Sub-136TA), December 1, 1978. Applicant: TRANS-NATIONAL TRUCK, INC., P.O. Box 31300, Amarillo, TX 79120. Representative: Warren L. Troupe, 2480 E. Commercial Blvd., Fort Lauderdale, FL 33308. *Paper and paper products and equipment, materials and supplies* used in the manufacture and distribution of paper and paper products (except commodities in bulk) between the facilities of Container Corporation of America located at or near Ft. Worth, TX on the one hand, and, on the other, New Orleans, Alexandria, and Colfax, LA; Greenville, MS; Wescosville, PA; and Terre Haute, IN, for 180 days. Supporting shipper: Container Corporation of America, P.O. Box 1441, Fort Worth, TX 76101 (O. Daniel Finholt). Send protests to: Haskell E. Ballard, District Supervisor, ICC, Box F-13206 Federal Building, Amarillo, TX 79101.

MC 135023 (Sub-20TA), filed December 5, 1978. Applicant: MARTEN TRANSPORT, LTD., Route 3, Mondovi, WI 54755. Representative: Robert S. Lee, 1000 First National Bank Bldg., Minneapolis, MN 55402. (1) *Such commodities* dealt in by wholesale and retail food business houses and (2) *Agricultural commodities* which are exempt from economic regulation under Section 203(b)(6) of the Interstate Commerce Act when transported at the same time and in the same vehicle with commodities listed in (1) above, from points in CA and AZ, to Bismarck and Fargo, ND; Green Bay and Milwaukee, WI; Hopkins, MN; Champaign, IL; Des Moines, IA; and Mitchell, SD, for 180 days. SUPPORTING SHIPPER(S): Super Valu Stores, Inc., 101 Jefferson Avenue South, Hopkins, MN 55343. SEND PROTESTS TO: Delores A. Poe Trans. Asst., ICC, 414 Federal Building & U.S. Court House, 110 South 4th Street, Minneapolis, MN 55401.

MC 135399 (Sub-13TA), filed December 6, 1978. Applicant: HASKINS TRUCKING, INC., P.O. Drawer 7729, Longview, TX 75602. Representative: Paul D. Angenend, P.O. Box 2207, Austin, TX 78768. *Paperboard boxes*, knocked down, from the facilities of J. G. Clark Company in Morrow County, OR, to points in Arizona, California, Colorado, New Mexico, Oklahoma, Texas and UT, for 180 days. SUPPORTING SHIPPER(S): J. G. Clark Company, 2079 Canaan Twp., Road, #244, Edison, OH 43320. SEND PROTESTS TO: Opal M. Jones Trans. Asst., ICC, 1100 Commerce Street, Room 13 C12, Dallas, TX 75242.

MC 136208 (Sub-8TA), filed December 6, 1978. Applicant: CREAGER TRUCKING CO., INC. 4 N.E., Marine Drive, Portland, OR 97217. Representative: Jerry R. Woods, 200 Market Building, Suite 1440, Portland, OR 97201. *Flat glass products*, from the facilities of Guardian Industries Corp., near Kingsburg, CA, to points in Idaho, Montana, Nevada, Oregon, Utah, Washington and AZ, for 180 days. SUPPORTING SHIPPER(S): Guardian Industries Corp., 11535 E. Mountain View Road, Kingsburg, CA 93631. SEND PROTESTS TO: R. V. Dubay DS, ICC, 114 Pioneer Courthouse, Portland, OR 97204.

MC 136315 (Sub-45TA), filed December 1, 1978. Applicant: OLEN BURRAGE TRUCKING, INC., Route 9, Box 22-A, Philadelphia, PA 39350. Representative: Fred W. Johnson, Jr., 1500 Deposit Guaranty Plaza, P.O. Box 22628, Jackson, MS 39205. (1) *Iron and steel articles*, from the facilities of Keystone Consolidated Industries, Inc., at or near Peoria, IL, to points in Louisiana, Mississippi and TX; and (2) *Materials, equipment and supplies*, (except in bulk), from points in the above named states to the facilities of Keystone Consolidated Industries, Inc., at or near Peoria, IL, for 180 days. SUPPORTING SHIPPER(S): Keystone Consolidated Industries, Inc., 7000 South Adams Street, Peoria, IL 61607. SEND PROTESTS TO: Alan C. Tarrant DS, ICC, Room 212, 145 East Amite Building, Jackson, MS 39201.

MC 136989 (Sub-19TA), filed December 4, 1978. Applicant: R. F. BOX, INC., 500 Kinley, N.E., Albuquerque, NM 87104. Representative: Edwin E. Piper, Jr., 1115 Sandia Savings Bldg., Albuquerque, NM 87102. Authority sought to operate as a *contract carrier*, by motor vehicle, over irregular routes, transporting: *Paints, wood stains, wood filler and caulking compounds*, from the plantsite of Dar-

worth Co., at or near Avon, CT, to points in Arizona, New Mexico, Colorado, Idaho, Montana, Utah, Nevada, California, Oregon and WA, under a continuing contract or contracts with, Darworth Co., for 180 days. An underlying ETA seeks up to 90 days authority. SUPPORTING SHIPPER(S): Danworth Co., P.O. Box K, Tower Lane, Avon, CT 06001. SEND PROTESTS TO: DS, ICC, 1106 Federal Office Building, 517 Gold Avenue, S.W., Albuquerque, NM 87101.

MC 138039 (Sub-7TA), filed December 4, 1978. Applicant: BAY DELIVERY CORP., 1919 Broadhollow Road, Farmingdale, NY 11735. Representative: Bruce J. Robbins, Robbins & Newman, 118-21 Queens Boulevard, Forest Hills, NY 11375. Authority sought to operate as a *contract carrier*, by motor vehicle, over irregular routes, transporting: *Health and beauty aids* from Syosset, NY, to points in the State of FL, (including Altamonte Springs, Orlando; Hialeah, Miami; North Miami Beach; Ft. Lauderdale; Sunrise; Boca Raton; Hallandale; Coral Gables; Sarasota and Fort Myers), *Returned, refused and rejected shipments on return*, under a continuing contract or contracts, with Allou Distributors, Inc., for 180 days. An underlying ETA seeks up to 90 days authority. SUPPORTING SHIPPER(S): Allou Distributors, Inc., 425 Underhill Boulevard, Syosset, NY 11791. SEND PROTESTS TO: Maria B. Kejss Trans. Asst., ICC, 26 Federal Plaza, New York, NY 10007.

MC 138126 (Sub-33TA), filed December 5, 1978. Applicant: WILLIAMS REFRIGERATED EXPRESS, INC., P.O. Box 47, Old Denton Road, Federalsburg, MD 21632. Representative: Chester A. Zyblut, 1030 15th Street, N.W., Washington, DC 20005. *Foodstuffs*, from the facilities of Campbell Soup Company and affiliates or subsidiaries at or near Milford and Clayton, DE; Salisbury, Pocomoke City and Baltimore, MD; Downingtown, PA, to points in Arkansas, Florida, Georgia, Nebraska and TX, for 180 days. An underlying ETA seeks up to 90 days authority. SUPPORTING SHIPPER(S): Donald R. Loring, Distribution Manager, Campbell Soup Company, P.O. Box 1618, Salisbury, MD 21801. SEND PROTESTS TO: William L. Hughes DS, ICC, 1025 Federal Building, Baltimore, MD 21201.

MC 139078 (Sub-15TA), filed December 5, 1978. Applicant: MIDCOAST TRUCKING, 131 Beaverbrook Road, Lincoln Park, NJ 07035. Representative: Alan Kahn, Two Penn Center Plaza, Philadelphia, PA 19102. Authority sought to operate as a *contract carrier*, by motor vehicle, over irregular routes, transporting: *Foodstuffs*, (not requiring refrigeration), from the facilities of Globe Products Company, Inc., at Clifton, NJ, to points in MI and OH, under a continuing contract ore contracts, with Globe Products Company, Inc., for 180 days. An underlying ETA seeks up to 90 days authority. SUPPORTING SHIPPER(S): Globe Products Company, Inc., P.O. Box 1927, Clifton, NJ 07015. SEND PROTESTS TO: Joel Morrows DS, ICC, 9 Clinton Street, Newark, NJ 07102.

MC 141085 (Sub-5TA), filed December 5, 1978. Applicant: EAST COAST TRUCKING, INC., 90 Rentell Road, Hamden, CT 06514. Representative: John E. Fay, 630 Oakwood Avenue, Suite 127, West Hartford, CT 06110. Authority sought to operate as a *contract carrier*, by motor vehicle, over irregular routes, transporting: *Processed log products, millwork, materials, accessories, parts and supplies* for assembly, processing, and manufacture of log homes, between plants located at Houston, MO, Laurenceville, VA; and Great Barrington, MA; on the one hand, to points and places in Arizona, Arkansas, California, Idaho, Iowa, Louisiana, Minnesota, Mississippi, Montana, Nebraska, Nevada, North Dakota, Oregon, South Dakota, Utah, Washington and Wyoming, under a continuing contract or contracts, with New England Log Homes, Inc., d.b.a. NELHI., for 180 days. SUPPORTING SHIPPER(S): New England Log Homes, Inc., d.b.a. NELHI, 2301 State Street, Hamden, CT 06518 SEND PROTESTS TO: J. D. Perry, Jr., DS, ICC, 135 High Street, Room 324, Hartford, CT 06103.

MC 142408 (Sub-1TA), filed December 5, 1978. Applicant: J. B. HAMILTON, d.b.a., HAMILTON TRUCKING COMPANY, P.O. Box 7543, Fort Worth, TX 76111. Representative: Billy R. Reid, P.O. Box 8335, Fort Worth, TX 76112. Authority sought to operate as a *contract carrier*, by motor vehicle, over irregular routes, transporting: *Plastic articles*, from Fort Worth, TX., to Los Angeles and San Francisco, CA, and Marion and Hartsville, SC, and between Fort Worth, TX., and Winston-Salem, NC, under a continuing contract or contracts, with Gallos Plastics Corporation, Fort Worth, TX., for 180 days. SUPPORTING SHIPPER(S): Gallos Plastics Corporation, 3220 May Street, Fort Worth, TX 76110. SEND PROTESTS TO: Martha A. Powell Trans. Asst., ICC, Room 9A27 Federal Building, 819 Taylor Street, Fort Worth, TX 76102.

MC 143163 (Sub-11TA), filed December 4, 1978. Applicant: RICHARDSON TRUCKING, INC., 603 8th Street, Greeley, CO 80611. Representative: Fred Cantonwine (same address as applicant). Authority sought to operate as a *contract carrier*, by motor vehicle, over irregular routes, transporting: *Meats, meat products, meat by-products, and articles distributed by meat packing houses*, (except hides and commodities in bulk), and foodstuffs from (1) Austin and Owatonna, MN; Ft. Dodge and Ottumwa, IA; Beloit, WI; and Fremont, NE., to points in Arizona, California, Colorado, New Mexico, Oklahoma, Oregon, Texas, and WA; (2) Stockton, CA to Austin, MN and Beloit, WI; (3) Ft. Worth, TX., to Chicago, IL; Fullerton, CA; Grand Rapids, MI; Indianapolis, IN; and Milwaukee, WI., restricted to service for George A. Hormel Co., for 180 days. An underlying ETA seeks up to 90 days authority. SUPPORTING SHIPPER(S): George A. Hormel & Co., P.O. Box 800, Austin, MN 55912. SEND PROTESTS TO: Roger L. Buchanan DS, ICC, 492 U.S. Customs House, 721 19th Street, Denver, CO 80202.

MC 143580 (Sub-1TA), filed December 5, 1978. Applicant: FREIGHT SYSTEMS, INC., 6303 Corsair Street, Commerce, CA 90040. Representative: Savery L. Nash, 800 Wilshire Boulevard, Suite 700, Los Angeles, CA 90017. Authority sought to operate as a *contract carrier*, by motor vehicle, over irregular routes, transporting: *Printed materials*, from points in Los Angeles County, CA., to points in CA., for 180 days. SUPPORTING SHIPPER(S): Dayton Press, Inc., 2219 McCall Street, Dayton, OH 45401. (2) The Conde Nast publications, Inc., 350 Madison Avenue, New York, NY. 10017. SEND PROTESTS TO: Irene Carlos Trans. Asst., ICC, Room 1321 Federal Building, 300 North Los Angeles Street, Los Angeles, CA 90012.

MC 143868 (Sub-3TA), filed December 1, 1978. Applicant: R.E.T.E.N.O. CARRIERS, INC., 2001 North Tyler, Suite H, South El Monte, CA 91733. Representative: William J. Monheim, P.O. Box 1756, Whittier, CA 90609. Authority sought to operate as a *contract carrier*, by motor vehicle, over irregular routes, transporting: *Steel*, moving in vehicles equipped with mechanical refrigeration, from Franklin Park, IL, to points in the Milwaukee, OR, commercial zone as defined by the Commission, under a continuing contract or contracts, with Carlton Company, for 180 days. An underlying ETA seeks up to 90 days authority. SUPPORTING SHIPPER(S): Carlton Company, 3901 S.E., Naef Road, Milwaukee, OR 97222. SEND PROTESTS TO: Irene Carlos Trans. Asst., ICC, Room 1321 Federal Building, 300 North Los Angeles Street, Los Angeles, CA 90012.

MC 143956 (Sub-2TA), filed December 13, 1978. Applicant: GARDNER TRUCKING CO., INC., Drawer 493, Waterboro, SC 29488. Representative:

Theodore Polydoroff, Suite 301, 1307 Dolley Madison Blvd., McLean, VA 22101. *Foodstuffs,* in vehicles equipped with temperature control, from the facilities of Hoslum Foods, Waukesha, WI, to Mechanicsburg, PA and Norfolk, VA, for 180 days. An underlying ETA seeks up to 90 days authority. SUPPORTING SHIPPER(S): Holsum Foods, 500 South Prairie Avenue, Waukesha, WI 53186. SEND PROTESTS TO: E. E. Strotheid DS, ICC, Room 302, 1400 Building, 1400 Pickens Street, Columbia, SC 29201.

MC 144054 (Sub-4TA), filed December 5, 1978. Applicant: BILL LITTLEFIELD TRUCKING, INC., 775 E. Vilas Road, Medford, OR 97501. Representative: Lawrence V. Smart, Jr., 419 N.W., 23rd Avenue, Portland, OR 97210. (1) *Gift-wrapped and packaged foods, food products and commodities* dealt in by retail gift shops (except frozen), and (2) *plants and bulbs* when moving at the same time and in the same vehicle with the commodities in (1) above, from the facilities of Harry and David at or near Medford, OR, to points in the United States (except Alaska, Hawaii and California), for 180 days. Applicant holds TA to serve CA (MC 144054) (Sub-1 TA). An underlying ETA seeks up to 90 days authority. SUPPORTING SHIPPER(S): Harry and David, P.O. Box 712, Medford, OR 97501. SEND PROTESTS TO: A. E. Odoms DS, ICC, 114 Pioneer Courthouse, Portland, OR 97204.

MC 144117 (Sub-22TA), filed December 8, 1978. Applicant: TLC LINES, INC., P.O. Box 1090, Fenton, MO 63026. Representative: William D. Brejcha, Esq., 10 South LaSalle Street, Suite 1600, Chicago, IL 60603. *Processed nuts and processed seeds and dried banana chips* (moving in mixed loads with exempt commodities), From the facilities of Tenneco West, Inc. at Paso Robles, Chico, Indio, Kerman, and Bakersfield, CA to points in the U.S. (except AK and HI), for 180 days. An underlying ETA seeks up to 90 days authority. SUPPORTING SHIPPER(S): Tenneco West, P.O. Box 9080, Bakersfield, CA 93309. SEND PROTESTS TO: P. E. Binder DS, ICC, Room 1465, 210 N. 12th Street, St. Louis, MO 63101.

MC 144703 (Sub-1TA), filed December 1, 1978. Applicant: MICHAEL PETERSEN TRUCKING, INC., 1452 Santa Monica Blvd., Santa Monica, CA. Representative: Greg P. Steffire, of Kellner, 700 S. Flower Street, Suite 1724, Los Angeles, CA 90017. Authority sought to operate as a *contract carrier,* by motor vehicle, over irregular routes, transporting: *Childrens furniture and toys,* from the facilities of GRACO Children's Products, Inc., at or near Elverson, PA., to points in Mississippi, Louisiana, Arkansas, Oklahoma, Texas, Missouri, Colorado, Utah, Arizona, California and Nevada, under a continuing contract or contracts, with GRACO Childrens Products, Inc., for 180 days. An underlying ETA seeks up to 90 days authority. SUPPORTING SHIPPER(S): GRACO Childrens Products, Inc., Elverson, PA 19520. SEND PROTESTS TO: Irene Carlos Trans., Asst., ICC, Room 1321 Federal Building, 300 North Los Angeles Street, Los Angeles, CA 90012.

MC 144941 (Sub-1TA), filed December 4, 1978. Applicant: THE BEVERAGE CARRIER CORPORATION, 595 East Tallmadge Avenue, Akron, OH 44310. Representative: Gary Rowland, 595 East Tallmadge Avenue, Akron, OH 44310. Authority sought to operate as a *contract carrier,* by motor vehicle, over irregular routes, transporting: *Carbonated or flavored beverages, and equipment, materials and supplies* used in the manufacture and distribution of such commodities (except commodities in bulk), between points in OH and MI., under a continuing contract or contracts, with Coca Cola Bottling Company, for 180 days. An underlying ETA seeks up to 90 days authority. SUPPORTING SHIPPER(S): Coca Cola Bottling Company of OH., Coca Cola Bottling Company of MI., 4710 W. Saginaw Highway, Lansing, MI. SEND PROTESTS TO: Mary Wehner Trans. Specialist, ICC, 731 Federal Office Building, 1240 East Ninth Street, Cleveland, OH 44199.

MC 145001 (Sub-4TA), filed December 4, 1978. Applicant: HORACE CHAVIS, d/b/a CHAVIS TRANSFER, 2019 Decatur Street, Richmond, VA 23224. Representative: Calvin F. Major, 200 W. Grace Street, Suite 415, Richmond, VA 23220. Authority sought to operate as a *contract carrier,* by motor vehicle, over irregular routes, transporting: *Uncrated cabinets and kitchen fixtures,* from points in VA., to points in Massachusetts, Connecticut, Pennsylvania, New Jersey, Delaware, Tennessee, Alabama, Mississippi and AR., under a continuing contract or contracts, with Richmond Lumber Co., for 180 days. An underlying ETA seeks up to 90 days authority. SUPPORTING SHIPPER(S): Richmond Lumber Co., 4th & Maury Streets, Richmond, VA 23205. SEND PROTESTS TO: Paul D. Collins DS, Room 10-502 Federal Building, 400 North 8th Street, Richmond, VA 23240.

MC 145129 (Sub-2TA), filed December 4, 1978. Applicant: WHITAKER TRANSPORTATION CO., INC., P.O. Box 1705, Chattanooga, TN 37401. Representative: Virgil H. Smith, Suite 12, 1587 Phoenix Boulevard, Atlanta, GA 30349. (1) *Corrugated cartons, K.D., and pulpboard* (except commodities in bulk), from the facilities of Container Corporation of America at or near Chattanooga, TN to points in Alabama and GA; and (2) *Materials and supplies* used in the manufacture and distribution of the commodities named in (1) above (except commodities in bulk), from points in AL and GA., to the facilities of Container Corporation of America at or near Chattanooga, TN., for 180 days. SUPPORTING SHIPPER(S): Container Corporation of America, P.O. Box 2225, 5853 E. Ponce De Leon Avenue, Stone Mountain, GA. 30086. SEND PROTESTS TO: Glenda Kuss Trans. Asst., ICC, Suite A-422, U.S. Court House, 801 Broadway, Nashville, TN 37203.

MC 145679 (Sub-3TA), filed Dec. 4, 1978. Applicant: A & A TRANSPORT SERVICES, INC., Maple Tree Industrial Park, Boston Road, P.O. Box 12, Palmer, MA 01069. Representative: Arlyn L. Westergren, Suite 106, 7101 Mercy Road, Omaha, NE 68106. *Meats and packinghouse products,* From East St. Louis, IL and its Commercial Zone to points in CT, MD, MA, MI, NH, NJ, NY, OH, PA, RI, and DC, for 180 days. An underlying ETA seeking up to 90 days of operating authority and has been granted a 20-day ETA partially duplicating the authority sought herein. SUPPORTING SHIPPER(S): Royal Packing Company, P.O. Box 156, National Stockyards, Il 62071. SEND PROTESTS TO: Mr. David Miller, District Supervisor, Interstate Commerce Commission, 436 Dwight Street, Room 338, Springfield, MA 01103.

MC 145718 (Sub-1TA), filed December 6, 1978. Applicant: MARCUS FREDELL, 2524 Columbus Circle, Charlotte, NC 28208. Representative: William P. Farthing, Jr., 1100 Cameron-Brown Building, Charlotte, NC 28204. Authority sought to operate as a *contract carrier,* by motor vehicle, over irregular routes, transporting: *Bricks,* between points in NC, on the one hand, and points in SC, on the other, under a continuing contract or contracts, with Ashe Brick Co., for 180 days. An underlying ETA seeks up to 90 days authority. SUPPORTING SHIPPER(S): Ashe Brick Co., Van Wyck, SC 29744. SEND PROTESTS TO: Terrell Price DS, 800 Briar Creek Road, Room CC 516, Mart Office Building, Charlotte, NC 28205.

MC 145809 (Sub-1TA), filed December 6, 1978. Applicant: R. V. BANNONS TRANSPORTERS, 4609 Longbranch Drive, Sacramento, CA 95842. Authority sought to operate as a *contract carrier,* by motor vehicle, over regular routes, transporting: *New mobile home coaches in initial movement in truckaway service,* From Rancho Cordova, CA, to Reno, Sparks, Carson City and Fallon, NV; routing Rancho Cordova, CA, to Sacramento,

CA, U.S. 40; to Reno, NV, and Sparks, NV, via I-80; U.S. 395 to Carson City, NV; to U.S. 50 to Fallon, NV, under a continuing contract or contracts, with Kaufman & Broad Home Systems, Inc., for 180 days. An underlying ETA seeks up to 90 days authority. SUPPORTING SHIPPER(S): Kaufman & Broad Home Systems, Inc., 11320 Amalgam Street, Rancho Cordova, CA. SEND PROTESTS TO: A. J. Rodriguez DS, 211 Main Street, Suite 500, San Francisco, CA 94105.

MC 145817 TA filed December 1, 1978. Applicant: RECREATIONAL PRODUCTS TRANSPORT, INC., (R.P.T.), Uxbridge Road (Route 16), Mendon, Massachusetts 01756. Representative: Mr. S. L. Watts, TDS, Inc.; 1050 Waltham Street, Lexington, Massachusetts 02173. *Boats new or used, and other products*, dealt with in the recreational marine products industry (except in bulk). Proposed operation will be between points in the states of CT, MA, ME, NH, NY, RI and VT on the one hand, and, on the other, points in the United States, excepting AK and HI, for 90 days. An underlying ETA seeking up to 90 days authority. SUPPORTING SHIPPER(S): Jessee F. White, Inc., Uxbridge Road, Mendon, MA 01756. SEND PROTESTS TO: David M. Miller DS, ICC, 436 Dwight Street, Springfield, MA 01103.

MC 145834 (Sub-1 TA), filed December 6, 1978. Applicant: PIPE HAULERS, INC., 1900 Grant Building, Pittsburgh, PA 15219. Representative: James P. Giltner, 709 Brookpark Road, Cleveland, OH 44109. Authority sought to operate as a *contract carrier*, by motor vehicle, over irregular routes, transporting: *Conduits and other pipe, and attachments, parts and fittings therefor*, and commodities used in the manufacture of same, between Croydon, PA., and points in New Jersey, New York, Delaware and MD., within 150 miles of Croydon, PA., under a continuing contract or contracts, with United States Concrete Pipe Company, for 180 days. SUPPORTING SHIPPER(S): United States Concrete Pipe Company, 709 Brookpark Rd., Cleveland, OH 44109. SEND PROTESTS TO: Mary Wehner DS, ICC, 731 Federal Office Building, 1240 East Ninth Street, Cleveland, OH 44199.

MC 145851 (Sub-1 TA), filed December 6, 1978. Applicant: BRUNSWICK TRUCK SERVICE, INC., Old Portland Road, Brunswick, ME 04011. Representative: Philip Sherwood, Old Portland Road, Brunswick, ME 04011. Authority sought to operate as a *contract carrier*, by motor vehicle, over irregular routes, transporting: *All types of scrap metals and all types of materials for recycling purposes*, from points in ME., on the one hand, to Madbury, NH, and Boston, MA, on the other, under a continuing contract, or contracts, with A. Gagnon & Sons, Inc., for 90 days. An underlying ETA seeks up to 90 days authority. SUPPORTING SHIPPER(S): A. Gagnon & Sons, Inc., P.O. Box 2418, South Portland, ME 04106. SEND PROTESTS TO: ICC, Room 305, 76 Pearl St., Portland, ME 04111.

MC 145870 TA, filed December 13, 1978. Applicant: L-J-R HAULING, INCORPORATED, P.O. Box 699, Dublin, VA 24084. Representative: Wilmer B. Hill, 805 McLachlen Bank Building, 666 Eleventh Street, N.W., Washington, D.C. 20001. (1) *Mining machinery and equipment, and parts* for such commodities, and (2) *materials, equipment and supplies* used in the manufacture and installation of mining machinery and equipment (except commodities in bulk), between the facilities of Long-Airdox Company, at or near Pulaski, VA and Rural Retreat, VA, on the one hand, and, on the other, points in AL, AR, CO, IL, IN, KY, MD, OH, OK, PA, TN, VT, VA, WV, and WY for 180 days. Applicant has also filed an underlying application seeking up to 90 days of emergency temporary authority. Supporting shipper: Long-Airdox Company, P.O. Box 1231, Pulaski, VA 24301. Send protests to: Mr. Paul D. Collins, District Supervisor, Interstate Commerce Commission, 10-502 Federal Bldg., 400 North Eighth Street, Richmond, VA 23240.

By the Commission.

H. G. HOMME, Jr.,
*Secretary.*

[FR Doc. 79-1834 Filed 1-17-79; 8:45 am]

---

[7035-01-M]

[Exception No. 11 under Section (a), Paragraph (1), Part (v) Second Revised Service Order No. 1332]

**SOUTHERN PACIFIC TRANSPORTATION CO.**

Decided: January 9, 1979.

By the Board:

Because of traffic interruptions and power problems, the Southern Pacific Transportation Company (SP) is temporarily unable to forward all cars within 60 hours as required by Section (a)(4)(i) of Second Revised Service Order No. 1332.

*It is ordered*, Pursuant to the authority vested in the Railroad Service Board by Section (a)(1)(v) of Second Revised Service Order No. 1332, the SP is required to forward loaded cars or empty foreign or private cars from the points named below within 72 hours.

SP

Houston, Texas, San Antonio, Texas, El Paso, Texas, Tucson, Arizona.

Effective: January 9, 1979.

Expires: 11:59 p.m., January 15, 1979.

ROBERT S. TURKINGTON,
*Acting Chairman,*
*Railroad Service Board.*

[FR Doc. 79-1833 Filed 1-17-79; 8:45 am]

# sunshine act meetings

This section of the FEDERAL REGISTER contains notices of meetings published under the "Government in the Sunshine Act" (Pub. L. 94-409) 5 U.S.C. 552b(e)(3)

CONTENTS


| | Items |
|---|---|
| Civil Aeronautics Board | 1, 2 |
| Commodity Futures Trading Commission | 3-7 |
| Federal Communications Commission | 8 |
| Federal Maritime Commission | 9 |
| Federal Mine Safety and Health Review Commission | 10 |
| National Mediation Board | 11 |
| National Transportation Safety Board | 12 |


[6320-01-M]

1

[M-190-Amdt. 1; Jan. 15, 1979]

CIVIL AERONAUTICS BOARD.

Notice of addition of items to the January 18, 1978, meeting agenda.

TIME AND DATE: 10 a.m., January 18, 1979.

PLACE: Room 1027, 1825 Connecticut Avenue NW., Washington, D.C. 20428.

SUBJECT:

6a. Docket 29968, *Louisville Service Case*—Tentative opinion and order disposing of deferred issues. (Memo 6240-D, OGC.)

9a. Docket 33105, Braniff's application for a further extension of its Las Vegas-Reno exemption. (Memo 8122-F, OGC.)

STATUS: Open.

PERSON TO CONTACT:

Phyllis T. Kaylor, the Secretary, 202-673-5068.

SUPPLEMENTARY INFORMATION: Although work on Item 6a was completed and it was circulated to Board Members on December 11, 1978, it was not received by the Secretary's Office until after the December 18, 1978, calendar had been closed. Item 9a is being added because Braniff's exemption expires after January 18, 1979. Accordingly, the following Members have voted that agency business requires the addition of Items 6a and 9a to the January 18, 1979, agenda and that no earlier announcement of these additions was possible.

Chairman Marvin S. Cohen
Member Richard J. O'Melia
Member Elizabeth E. Bailey
Member Gloria Schaffer

[S-103-79 Filed 1-16-79; 3:22 pm]

[6320-01-M]

2

[M-190 Amdt 2; Jan. 15, 1979]

CIVIL AERONAUTICS BOARD.

Notice of deletion of item from the January 18, agenda.

TIME and DATE: 10 a.m., January 18, 1979.

PLACE: Room 1027, 1825 Connecticut Avenue NW., Washington, D.C. 20428.

SUBJECT: (9). Dockets 33580, 33629, 33672, 33821, 33863, 33878, and 33997; applications for certificate amendments nonstop Denver-Detroit authority in the following: Frontier, Braniff, Northwest, Allegheny, Continental, American, and Ozark (memo 8423, BPDA, OGC).

STATUS: Open.

PERSON TO CONTACT:

Phyllis T. Kaylor, the Secretary, 202-673-5068.

SUPPLEMENTARY INFORMATION: The staff needs additional time in order for further revisions. Accordingly, the following Members have voted that agency business requires the deletion of Item 9 from the January 18, 1979, agenda and that no earlier announcement of this change was possible:

Chairman Marvin S. Cohen
Member Richard J. O'Melia
Member Elizabeth E. Bailey
Member Gloria Schaffer

[S-104-79 Filed 1-16-79; 3:22 pm]

[6351-01-M]

3

COMMODITY FUTURES TRADING COMMISSION.

"FEDERAL REGISTER" CITATION OF PREVIOUS ANNOUNCEMENT: FR, Vol. 44, No. 7, Wednesday, January 10, 1979, page 2238.

PREVIOUSLY ANNOUNCED TIME AND DATE OF THE MEETING: 2 p.m. January 19, 1979.

CHANGES IN THE MEETING: Meeting canceled.

[S-105-79 Filed 1-16-79; 3:22 pm]

[6351-01-M]

4

COMMODITY FUTURES TRADING COMMISSION.

TIME AND DATE: 10 a.m., January 23, 1979.

PLACE: 2033 K Street NW., Washington, D.C., fifth floor hearing room.

STATUS: Open.

MATTERS TO BE CONSIDERED: Leverage contracts on commodities other than gold and silver.

CONTACT PERSON FOR MORE INFORMATION:

Jane Stuckey, 254-6314.

[S-106-79 Filed 1-16-79; 3:22 pm]

[6351-01-M]

5

COMMODITY FUTURES TRADING COMMISSION.

TIME AND DATE: 11 a.m., January 23, 1979.

PLACE: 2033 K Street NW., Washington, D.C., fifth floor hearing room.

STATUS: Closed.

MATTERS TO BE CONSIDERED: Enforcement matters: proposed administrative proceedings.

CONTACT PERSON FOR MORE INFORMATION:

Jane Stuckey, 254-6314.

[S-107-79 Filed 1-16-79; 3:22 pm]

[6351-01-M]

6

COMMODITY FUTURES TRADING COMMISSION.

TIME AND DATE: 10 a.m., January 24, 1979.

PLACE: 2033 K Street NW., Washington, D.C., eight floor conference room.

STATUS: Closed.

MATTERS TO BE CONSIDERED: Judicial session.

CONTACT PERSON FOR MORE INFORMATION:

Jane Stuckey, 254-6314.

[S-108-79 Filed 1-16-79; 3:22 pm]

[6351-01-M]

7

COMMODITY FUTURES TRADING COMMISSION.

TIME AND DATE: 11 a.m., January 26, 1979.

PLACE: 2033 K Street NW., Washington, D.C., eighth floor conference room.

STATUS: Closed.

MATTERS TO BE CONSIDERED: Market surveillance.

CONTACT PERSON FOR MORE INFORMATION:

Jane Stuckey, 254-6314.

[S-109-79 Filed 1-16-79; 3:22 pm]

---

[6712-01-M]

8

FEDERAL COMMUNICATIONS COMMISSION.

TIME AND DATE: 9:30 a.m., Wednesday, January 17, 1979.

PLACE: Room 856, 1919 M Street NW., Washington, D.C.

STATUS: Open Commission meeting.

CHANGES IN MEETING: Additional item to be considered:

AGENDA, ITEM NUMBER, AND SUBJECT

Common Carrier—4—Transmittals by the International Record Carriers proposing rate reductions to implement flow through of Comsat's reductions in satellite facility costs.

Additional information concerning this meeting may be obtained from the FCC Public Information Office, telephone number 202-632-7260.

Issued: January 12, 1979.

[S-98-79 Filed 1-16-79; 10:16 am]

---

[6730-01-M]

9

FEDERAL MARITIME COMMISSION.

TIME AND DATE: 10 a.m., January 24, 1979.

PLACE: Room 12126, 1100 L Street NW., Washington, D.C. 20573

STATUS: Parts of the meeting will be open to the public. The rest of the meeting will be closed to the public.

MATTERS TO BE CONSIDERED: Portions open the public.

1. Agreement No. 9882-1: Modification of the Pacific Australia direct line joint service agreement to provide for intermodal authority.

2. Agreement No. 10012-3: Application for extension of the intermodal authority of the Australia-Pacific Coast rate agreement.

3. Proposed reduced rates applicable between Charleston, S.C., and Puerto Rico filed by Puerto Rico Maritime Shipping Authority.

4. Docket No. 76-11: In re: Agreement Nos. 150 DR-7 and 3103 DR-7—Request for oral argument and petition of J. Alton Boyer to file brief amicus curiae.

5. Agreement No. 10066: Equal access agreement in the United States-Colombian trades—Compliance with conditional order of approval.

Portion closed to the public:

1. Docket No. 78-32: Pacific Westbound Conference—Equalization and absorption rules and practices—Discussion of the record.

CONTACT PERSON FOR MORE INFORMATION:

Francis C. Hurney, Secretary, 202-523-5725.

[S-99-79 Filed 1-16-79; 11:33 am]

---

[6735-01-M]

10

JANUARY 15, 1979.

FEDERAL MINE SAFETY AND HEALTH REVIEW COMMISSION.

TIME AND DATE: 10 a.m., January 19, 1979.

PLACE: Room 600, 1730 K Street NW., Washington, D.C.

STATUS: This meeting will be partly open and partly closed.

MATTERS TO BE CONSIDERED: Part open to public.

1. *Consolidation Coal Co.*, Docket Nos. 79-2-P, 79-4-P, 79-5-P. The issue involves whether the Commission should direct review on its own motion of the Administrative Law Judge's decision approving a settlement.

Part closed to public.

2. *Anschutz Coal Corporation* v. *Federal Mine Safety and Health Review Commission*, No. 78-1840, pending 10th Circuit. This part of the meeting involves the Commission's position in the above civil preceeding. 29 CFR 2701.7 (44 FR 2576).

It was determined by unanimous vote of the Commissioners that Commission business required that these matters be immediately scheduled for a Commission meeting and that no earlier announcement of this action was possible.

CONTACT PERSON FOR MORE INFORMATION:

Joanne Kelley, 202-653-5644.

[S-101-79 Filed 1-16-79; 2:07 pm]

[7550-01-M]

11

NATIONAL MEDIATION BOARD

TIME AND DATE: 2 p.m., Wednesday, February 7, 1979.

PLACE: Board hearing room, Eighth floor, 1425 K Street NW., Washington, D.C.

STATUS: Open.

MATTERS TO BE CONSIDERED:

(1) Ratification of Board actions taken by notation voting during the month of January 1979.

(2) Consideration of proposed rulemaking actions with respect to NMB rules §§ 1202.15, 1206.2, and 1206.4; 29 CFR §§ 1202.15. 1206.2 and 1206.4.

(3) Other priority matters which may come before the Board for which notice will be given at the earliest practicable time.

SUPPLEMENTARY INFORMATION: Copies of the monthy report of the Board's notation voting actions will be available from the Executive Secretary following the meeting.

CONTACT PERSON FOR MORE INFORMATION:

Mr. Rowland K. Quinn, Jr., Executive Secretary; 202-523-5920.

Date of notice: January 15, 1979.

[S-100-79 Filed 1-16-79; 11:40 am]

---

[4910-58-M]

12

[NM-79-2]

NATIONAL TRANSPORTATION SAFETY BOARD.

TIME AND DATE: 9 a.m., Thursday, January 25, 1979.

PLACE: NTSB board room, National Transportation Safety Board, 800 Independence Avenue SW., Washington, D.C. 20594.

STATUS: Open.

MATTERS TO BE CONSIDERED:

1. Discussion of NTSB's Affirmative Action Program.

2. Marine Accident Report—Charter Fishing Board *Dixie Lee II*, capsizing in severe thunderstorm in the Chesapeake Bay near Norfolk, Va., June 6, 1977.

3. Marine Accident Report—Showboat *Whippoorwill*, capsizing in Pomona Lake, Kans., June 17, 1978.

4. Letter to U.S. Coast Guard re recommendation M-78-13, loadlines.

5. Inclusion in the record of Member McAdams' memorandum of January 15, 1979, relative to Notation 2548, adopted by the Board on January 11, 1979.

CONTACT PERSON FOR MORE INFORMATION:

Sharon Flemming, 202-472-6022.

[S-102-79 Filed 1-16-79; 2:43 pm]

federal register

THURSDAY, JANUARY 18, 1979
PART II

THE NATIONAL ARCHIVES OF THE UNITED STATES
1934

# DEPARTMENT OF TRANSPORTATION

## Coast Guard

# CHESAPEAKE BAY, COVE POINT, MARYLAND

## Safety Zone Regulations

[4910-14-M]

## DEPARTMENT OF TRANSPORTATION

### Coast Guard

[33 CFR Part 165]

[CGD5-78-06R]

### CHESAPEAKE BAY, COVE POINT, MD.

#### Safety Zone Regulations

AGENCY: Goast Guard, DOT.

ACTION: Proposed Rule.

SUMMARY: The Coast Guard proposes to establish a safety zone in the vicinity of the Columbia LNG Corporation's offshore liquefied natural gas (LNG) receiving terminal near Cove Point, Maryland. This safety zone is proposed to minimize the risk of collision between LNG carriers and other vessels while they are maneuvering in the vicinity of, or moored to, the offshore terminal. This additional precautionary measure is deemed necessary in consideration of the nature and quantity of the liquefied natural gas cargo involved and the limited ability of the LNG vessels to take evasive action when maneuvering to approach or depart the offshore terminal. This proposed safety zone regulation would require persons to comply with the general safety zone regulations contained in 33 CFR Part 165.20, which prohibit persons from entering or remaining in the safety zone without authorization from the Captain of the Port. This safety zone is in effect at all times. The exact parameters of the zone are dependent upon whether an LNG vessel is moored to; maneuvering in the vicinity of; or is not present at the Columbia LNG offshore terminal. Mariners will be provided advance notice of scheduled arrivals and departures of LNG vessels calling at the Cover Point terminal via Broadcast Notice to Mariners.

DATES: Comments must be received on or before March 5, 1979.

ADDRESSES: Comments should be submitted to the Captain of the Port, Customhouse, Baltimore, Maryland 21202. Comments will be available for examination at the office of the Captain of the Port, Room 333, Customhouse, Gay and Lombard Streets, Baltimore, Maryland.

FOR FURTHER INFORMATION CONTACT:

Lieutenant Commander Eric J. Williams III, Chief, Port Operations, Department, Marine Safety Office, Customhouse, Baltimore, Maryland 21202. (301-752-3573)

SUPPLEMENTARY INFORMATION: Interested persons are invited to participate in this proposed rulemaking by submitting written views, data, or arguments. Each person submitting a comment should include his name and address, identify the notice (CGD5-78-06R and the specific section of the proposal to which his comment applies, and give reasons for his comment. All comments received before the expiration of the comment period will be considered before final action is taken on this proposal. No public hearing is planned but one may be held at a time and place to be set in a later notice in the FEDERAL REGISTER if requested in writing by an interested person raising a genuine issue and desiring to comment orally at a public hearing.

DRAFTING INFORMATION

The principal persons involved in drafting this proposal are: Lieutenant D. G. BRATTON, Port Safety Branch of the Marine Safety Division, and Lieutenant M. P. TROSETH of the office of the District Legal Officer, Fifth Coast Guard District.

DISCUSSION OF THE PROPOSED RULE

This proposed safety zone is intended to be part of an overall safety program implemented by the Captain of the Port, Baltimore, Maryland to enhance the safety of liquefied natural gas operations on Chesapeake Bay. The Coast Guard promulgated regulations which set forth the procedures for the establishment of safety zones for the protection of vessels, structures, and water and shore areas. These regulations also provide for publishing specific safety zones when they have a continuing application (33 CFR Part 165, 42 FR 63369). This safety zone is in effect at all times, whether an LNG vessel is or is not moored to the Columbia LNG Corporation's offshore terminal; when an LNG vessel is maneuvering in the vicinity of the offshore terminal; or when an LNG vessel signals its intention to depart from the offshore terminal. All marine traffic in the vicinity would be prohibited from entering or remaining in this safety zone without authorization from the Captain of the Port, Baltimore, Maryland. Mariners will be provided notice of scheduled arrivals and departures of LNG vessels calling at the Cove Point terminal via Broadcast Notice to Mariners.

This proposed safety zone is to be established in the immediate vicinity of the Columbia LNG Corporation's offshore receiving terminal near Cove Point, Maryland. This offshore structure is located approximately one mile from the western shore of Chesapeake Bay, and is designed to accommodate a maximum of two LNG vessels simultaneously. The vessels that use this facility are approximately 925 feet in length and operate at a draft of approximately 36 feet. Both the size of these vessels and the significant "sail areas" presented by their above-water hull configurations require the masters to exercise delicate handling skills when maneuvering in the vicinity of the offshore terminal, thereby limiting their ability to take evasive action to avoid other traffic while conducting these maneuvers. The waters surrounding the offshore platform are utilized by both commercial and sport fishermen, as well as by general recreational boaters. The establishment of this safety zone would enhance the safety of all watermen operating in this area.

This safety zone covers a small area and therefore it should not cause undue hardships to local fishermen and watermen. The size and configuration of this safety zone were chosen after consultations by the Captain of the Port, Baltimore with representatives of various state and local agencies and local watermen associations. The Coast Guard is proposing this safety zone both because it affords ample maneuvering room for the LNG vessels and because its application is limited to only those situations when hazardous conditions are deemed to exist. The Columbia LNG Corporation received its initial shipment of LNG at its Cove Point terminal in March 1978. For that and subsequent vessel arrivals, the Captain of the Port, Baltimore, has exercised his authority under 33 CFR 165 by establishing, on each occasion, a temporary safety zone describing the identical location and conditions contained in this notice of proposed rulemaking. Interested persons who have communicated with the Captain of the Port, Baltimore have voiced general approval of the safety zone. The Coast Guard has determined that establishing this safety zone, which has continuing application, would enhance its effectiveness through greater dissemination.

This regulation has been reviewed under DOT notice 78-1 "Improving Government Regulations" (43 FR 9582) and a draft evaluation has been prepared and is available for public inspection at the fifth district address indicated above.

An environmental assessment has been completed and an initial determination has been made that this proposed action would result in no adverse impact on the quality of the human environment.

In consideration of the foregoing, it is proposed to amend Part 165 of Title 33 Code of Federal Regulations by adding § 165.—, to read as follows

**§ 165.— Cove Point, Chesapeake Bay, Maryland.**

(a) The waters and waterfront facilities located within the following boundary constitute a safety zone ef-

fective when an LNG carrier is maneuvering in the vicinity of the Cove Point terminal and when a moored LNG carrier indicates its intention to get underway; a line beginning at a point one-half mile NW of the end of the north pier of the Columbia LNG facility at Cove Point, Maryland, located at 38°24'43" N latitude, 76°23'32" W longitude; thence 056°T to a point 2800 yards off shore at 38°24'59" N latitude, 76°23'01" W longitude; thence 146°T to a point located 2300 yards off shore at 38°23'52" N latitude, 76°22'03" W longitude; thence 236°T to a point one-half mile SE of the end of the south pier of the Columbia LNG facility at Cove Point, Maryland, located at 38°23'39" N latitude, 76°22'35" W longitude; thence north westerly to the point of origin.

(b) The waters and waterfront facilities located within the following boundary constitute a safety zone when an LNG carrier is moored at the receiving terminal: the area within 200 yards of the moored LNG carriers at the Columbia LNG offshore terminal, Cove Point, Maryland. Regardless of whether one or two LNG vessels are moored, the safety zone will extend 50 yards on the shoreside of the offshore terminal.

(c) The waters and waterfront facilities located within the following boundary constitute a safety zone when no LNG carrier is moored at the receiving terminal: the area within 50 yards of the Columbia LNG Corporation offshore terminal, Cove Point, Maryland.

(d) The general regulations governing safety zones as contained in 33 CFR 165.20 apply.

(86 Stat. 427 (33 USC 1224); 49 CFR 1.46), as amended by Section 2 of the Port and Tanker Safety Act of 1978 (Pub. L. 95-474).

J. W. KIME,
*Captain, U.S. Coast Guard, Captain of the Port, Baltimore, Md.*

[FR Doc. 79-1374 Filed 1-16-79; 8:45 am]

federal register

THURSDAY, JANUARY 18, 1979
PART III

# DEPARTMENT OF COMMERCE

## Office of the Secretary

# NATIONAL VOLUNTARY LABORATORY ACCREDITATION PROGRAM

## Test Thermal Insulation Materials; General and Specific Criteria, and Fees and Charges

[3510-13-M]

## DEPARTMENT OF COMMERCE

### Office of the Secretary

### NATIONAL VOLUNTARY LABORATORY ACCREDITATION PROGRAM

**Final General and Specific Criteria for Accrediting Laboratories That Test Thermal Insulation Materials**

AGENCY: Assistant Secretary of Commerce for Science and Technology.

ACTION: Announcing the final general and specific criteria that laboratories which test thermal insulation materials must meet in order to be accredited under the provisions of the National Voluntary Laboratory Accreditation Program.

SUMMARY: Pursuant to the Procedures for a National Voluntary Laboratory Accreditation Program (NVLAP) (15 CFR Part 7), this notice contains the text of the final general and specific criteria to be used by the Secretary of Commerce (Secretary) in accrediting testing laboratories that voluntarily request such accreditation under the National Voluntary Laboratory Accreditation Program for Thermal Insulation Materials (NVLAP-1). These final criteria are based upon criteria proposed in the FEDERAL REGISTER on September 29, 1978 (43 FR 45290-45297), and include modifications to the proposed criteria in response to comment from the public. The evaluation of these public comments and the recommendations of the National Laboratory Accreditation Criteria Committee for Thermal Insulation Materials (NLACC-1) submitted to the Assistant Secretary of Commerce for Science and technology on December 18, 1978, provided valuable guidance in arriving at the final criteria.

These final criteria do not differ from the proposed criteria in any significant way. The Notes following Criteria G1 and S1 were modified so as to make it clear that the on-site examiner, upon visiting a laboratory, may compare resumes of key persons with resumes and job descriptions provided by the testing laboratory in response to the requirements of sections G1.1.6 and S1.1 of criteria. The purpose of this comparison will be to assure that the laboratory is staffed with personnel competent in the principles and practices of measurement in the area in which accreditation is sought. Section G2.1.4 was changed to make it clear that the laboratory is expected to have a procedure to respond to complaints about test results. Although these procedures may vary among the various accredited laboratories, NVLAP will establish its own uniform procedures to respond to complaints which it receives about accredited laboratories. The note following section 4 of Criterion S4 was also expended to make it clear that a laboratory accredited for a specific test method must also be accredited for all other test methods in the NVLAP program which are used to obtain data necessary to complete the specific test method.

In addition to these modifications of the criteria proposed on September 29, 1978, several paragraphs have been added at the beginning of the criteria which contain instructions for making application for accreditation and describe the conditions related to examination of the laboratory, fees to be paid by the laboratory, and limits on the laboratory in publicizing the laboratory's NVLAP accreditation as specified in section 7.7(c) of the NVLAP procedures (15 CFR Part 7). Several paragraphs have also been added at the end of criteria in order to clearly identify the requirements applicable to proficiency sample testing.

Finally, Appendix 1 of the proposed criteria was clarified and amplified. Several test methods, dealing primarily with tests for cellulose insulation, were added to the program. The data presented in Appendix 1 are supplemental to the criteria, clarifying the application of the criteria to thermal insulation materials. As such, they are part of the operating process of the program and not part of the criteria. As this NVLAP program is implemented, it may be necessary to change some of the stated values for precision and accuracy of each test method, modify proficiency sampling programs, or to make other adjustments to the material in Appendix 1 in response to changes in the state-of-the-art. When such changes are developed they will be published in the FEDERAL REGISTER and made effective immediately upon publication.

DATES: These final criteria shall go into effect on (please insert the date which is 30 days from the date this notice will appear). Laboratories which complete their application for accreditation and submit their fee by February 28, 1979 will be included among the first group of laboratories to be evaluated for accreditation under NVLAP procedures. Applications received after this date will be included in a second group of laboratories to be evaluated six months to one year later.

FOR FURTHER INFORMATION CONTACT:

Dr. Howard I. Forman, Deputy Assistant Secretary for Product Standards. Room 3876, U.S. Department of Commerce, Washington, DC 20230; (202) 377-3221.

SUPPLEMENTARY INFORMATION: On September 29, 1978, the Department of Commerce (Department) announced in the FEDERAL REGISTER (43 FR 45290-45297) the issuance of proposed criteria for accrediting testing laboratories that test thermal insulation materials. On the same day in a separate FEDERAL REGISTER notice (43 FR 45298) the Department issued the proposed schedule of estimated fees that laboratories would be charged if they want to become accredited. Information on fees was provided to enable a laboratory to more completely evaluate the proposed criteria.

Persons desiring to comment on the proposed criteria were invited to submit their comments to the Assistant Secretary for Science and Technology on or before November 13, 1978. Fourteen respondents submitted written statements during the comment period. Their statements are part of the public record and are available for inspection and copying in the Department's Central Reference and Records Inspection Facility, Room 5317, Main Commerce Building, 14th Street between Constitution Avenue and E Street, N.W., Washington, DC 20230.

Persons desiring to present views at an informal hearing on the proposed criteria were invited to request such hearings. No such requests were received and, accordingly, no hearings were held.

The issues raised by the public comment in response to the notice of proposed criteria were addressed by the NLACC-1 in an open meeting on December 8, 1978. The Committee's report entitled "Report of Evaluation and Recommendations with Respect to Comments Received from the Public on the Proposed Criteria for Accrediting Testing Laboratories that Test Thermal Insulation Materials" was presented to the Assistant Secretary for Science and Technology on December 18, 1978 and is available for inspection and copying in the Departmental Central Reference and Records Inspection Facility mentioned above.

### EVALUATION OF COMMENTS

A total of 14 issues were raised in response to the criteria as proposed. Eight issues relate directly to the criteria for accrediting laboratories. The six other issues relate to the operating process of NVLAP, including the content of Appendix 1 of the proposal which is not part of the criteria. The criteria and Appendix 1 have been revised to respond to a number of the comments. Further revisions to Appendix 1 may be necessary as the program is implemented. When such revisions are developed, they will be published in FEDERAL REGISTER and made

effective immediately upon publication.

ISSUES RELATED TO THE CRITERIA

1. Should the names and resumes of laboratory personnel be required in evaluating a laboratory's capability? Two respondents agreed with the criteria as proposed in that names and resumes of key laboratory personnel need not be provided, while three other respondents expressed the belief that such a requirement is appropriate if restricted to a limited number of personnel. This issue remains controversial. Some of the Committee members expressed concern that if names and resumes are required, individuals could be "black listed", while others were concerned that, without resumes, the personnel function cannot be effectively evaluated pursuant to Criterion S1. Criteria and examination methodology from six existing laboratory accreditation programs were reviewed. In most of these, the submission of resumes describing the technical background, expertise, and competence of the laboratory staff is required. However, without criterial which specify minimum levels of educational attainment, professional recognition (e.g. "professional engineer"), and a requisite number of years of working experience, the evaluation of a laboratory's staff would be subjective. In response to the recommendations of the Criteria Committee, Criteria G1 and S1 continue to state that either resumes or position descriptions may be supplied to meet this requirement. Moreover, the notes following Criteria G1 and S1 make clear that during on-site evaluation, personnel backgrounds of incumbent laboratory personnel will be compared to corresponding position descriptions or resumes supplied by the laboratories in response to the questionnaire. Also Appendix 2 has been added as a guide showing the type of information which a laboratory should supply in resumes or position descriptions.

2. May unaccredited laboratories be used by accredited laboratories as subcontractors? Two respondents indicated that the possible use of subcontractors by accredited laboratories for the performance of test methods included in the program was unclear. Using test methods in the NVLAP program as examples, one respondent described how a laboratory accredited for a second test method might use as input data to this second test method data provided by a subcontractor using a first test method. At issue is whether NVLAP accredited testing laboratories would have to be used as a subcontractor or whether unaccredited laboratories could be used. In such a situation, the Committee recommended that the laboratory accredited for the second test method should also be accredited for all other test methods used to obtain input data.

The Committee further suggested that if an accredited laboratory obtains data from an unaccredited laboratory for a test method that was included in the program, the accredited laboratory's client should be so notified. It was recognized that problems associated with the repeated testing of products are related more to a certification of the product than to NVLAP recognition of a laboratory through accreditation. Thus, it was recommended that an accredited laboratory should be allowed to subcontract to an unaccredited laboratory any tests for which the former laboratory itself is accredited, provided its clients were so notified. However, subcontracting for test specimen preparation and for determining intermediate values (except where such intermediate values are obtained from a test method included in the NVLAP program) should not require notification of the laboratory's clients if there is compliance with provisions of section S4.2 of the criteria.

The note after section S4.2 of the Criteria has been changed in response to the Committee's recommendations.

3. Should only independent laboratories be included in NVLAP? Three respondents addressed the independence of laboratories and the related conflict of interest issue. One respondent felt that only commercial independent laboratories should be accredited. Another respondent suggested that sections G3.3 and G3.4 of the criteria should be strengthened to minimize possible conflict of interest and to provide a means of validating that independent actions are actually made. However, another respondent expressed the belief that sections G3.3 and G3.4 are fair to both independent and in-house laboratories and therefore should remain unchanged.

Section 7.7(e)(1) of the NVLAP procedures explicitly states that, "No action will be taken or criteria developed that would prohibit the accreditation of a testing laboratory solely on the basis of that laboratory's association or nonassociation with manufacturing, distributing, or vending organizations . . ." The criteria as proposed are consistent with the above quoted prohibition. Moreover, if the actions of an accredited laboratory are not in accord with the submitted evidence of the "independent decisional relationship" requirements of sections G3.3 and G3.4 of the criteria, appropriate action including deaccreditation may be taken. The Committee's recommendation against changing sections G3.3 and G3.4 has been accepted.

4. How will proficiency testing be used in the program? One respondent indicated that the frequency of proficiency testing is not clear in the proposed criteria and suggested that such testing be carried out at least yearly. This respondent added that the proposed criteria do not establish a relationship between proficiency testing and the establishment of protocols for assuring that the requisite precision and accuracy figures cited in Appendix 1 are achieved. Also, this respondent expressed the belief that guidelines and requirements concerned with the conduct of these proficiency tests must be included in the final criteria document. A better description of the operation of the proficiency testing program is indeed needed.

In response to the recommendations of the Committee, this issue has been addressed in the criteria under a separate heading and a new table (Table 2) has been added to Appendix 1 showing those test methods currently subject to proficiency testing and the frequency of such tests. It is the intent of the National Bureau of Standards (NBS) which is responsible for evaluating the testing laboratories to use Collaborative Testing Services, Inc. (CTS), a nonprofit organization currently cosponsoring collaborative reference programs with NBS, to conduct the proficiency testing programs. Enrollment in the NBS-CTS Collaborative Reference Program for the test methods shown in Table 1 of Appendix 1 and the successful attainment of the precision and accuracy shown will be accepted as fulfilling the proficiency testing requirements of NVLAP-1. This does not preclude the use of other collaborative reference programs or existing proficiency testing programs for the test methods involved if appropriate arrangements can be completed with NBS. The Committee also raised a question with regard to materials used in conducting corrosion tests. For example, metal coupons (strips) employed for evaluating corrosion require removal of protective coatings before use. However, if such a coating is not removed properly, inaccurate results may be obtained. It was suggested that, if proficiency tests are planned, chemical coating removers should be supplied with the metal coupons and the proficiency sample insulation materials. NBS will give careful consideration to this operational recommendation as the state-of-the-art develops.

5. Should modifications to the test methods be allowed? Two respondents commented on the provisions of the proposed criteria allowing for noncritical modifications of equipment or facilities and noncritical varitions in the test procedures as long as test result are not degraded. One respondent suggested that judgments regarding whether such modifications and variations are "noncritical" should be

relegated to the responsible standards development groups. The other respondent suggested that a section be added to Criterion S2 encouraging participation in professional societies and continuing education as ways of maintaining current knowledge thereby maintaining capability to make appropriate judgments. The Committee discussed this subject in depth in one of its earlier meetings and had concluded that, although in some instances it may be very difficult to determine what is noncritical, knowledgeable NVLAP on-site evaluators and proficiency testing should be adequate to evaluate these modifications. There appears to be no need to specify particular requirements, such as continuing education or society participation, for maintaining required competence. Accordingly, the Committee's recommendation that no change be made to the criteria has been accepted.

The Department believes it is appropriate at this point to stress, that under § 7.7(e)(5) of the NVLAP procedures, any written information supplied in response to these criteria and Criterion S2 in particular will not be considered confidential business data, trade secrets, or proprietary information.

6. Are the requirements for written information too extensive? Two respondents addressed the requirements for written information. One respondent stated that there appears to be excessive written compliance information which is either repetitious or only remotely related to a laboratory's competence. The other respondent suggested that NVLAP examiners, during on-site examinations, should concentrate on the actions taken by the laboratory to implement that procedure and to provide the written information, and should observe actual calibration tests on selected test equipment.

There may very well be some unnecessary overlap in the criteria. However, different characteristics of the laboratory are being assessed and the evaluation is being approached from different standpoints. Nonetheless, as explained in the notice of the proposed criteria, duplication of information is not required; a simple cross reference would be sufficient. Change in the criteria may be appropriate after experience has been gained. NVLAP examiners are expected to use all appropriate means to verify that the laboratories implement test procedures properly and prepare appropriate written information. The Committee's recommendation that no change is deemed necessary at this time has been accepted.

7. Should uniform appeal procedures be established? One respondent sugested that there should be a unified complaint handling procedure to be established by NBS for contesting test results. Criterion G2.5.6 refers to the complaint handling procedures established by the laboratory to respond to complaints it receives. Any complaints made to NBS and the Department relative to a laboratory will be handled under a single unified procedure. It does not appear to be necessary to require each laboratory to handle complaints to it in the same way. In response to the Committee's recommendation, the Note at the end of Criterion G2 has been modified to clarify the intent of the criterion.

8. Should the time within which it is necessary to notify NVLAP of changes in the laboratory be increased? One respondent expressed the belief that the costs for reporting of changes will be excessive if a 30-day notification period and a 45-day implementation period is adopted as specified in Criterion G4. This respondent recommended a 120-day notification period and a 180-day implementation period. A delay of 120 days before notification of changes was excessive in the view of the Committee. In response to the Committee's recommendations, deadlines for reporting and implementing changes remain as specified in the proposed criteria.

ISSUES RELATED TO THE PROGRAM OPERATIONS (INCLUDING APPENDIX 1)

9. Should additional test methods be included in this laboratory accreditation program? A number of respondents expressed concerns about the apparent omission from the program of test methods contained in certain product standards (e.g., test methods in product standard ASTM C739, General Services Administration Specification (GSA) HH-I-515, and cellulose insulation standards published by the Consumer Product Safety Commission (CPSC)). Several other test methods were also suggested for inclusion in NVLAP-1.

The requestor of this program identified specific product standards and test methods covering the following five properties of thermal insulation materials:

1. Thermal properties;
2. Dimensions, stability and density properties;
3. Strength properties;
4. Fire properties; and
5. Properties of vapor barriers.

The requestor did not identify tests in the areas of corrosiveness and odor emission contained in C739. Standard ASTM C739 was included as a relevant standard, however, in the final finding of need for the program as published on October 12, 1977 (42 FR 55020–55024). The following ASTM standard test methods listed in that standard are included in NVLAP-1: C177, C518, C236, C687, C519, C591, and E84.

There are a number of test methods contained integrally in ASTM C739 and several other product standards which do not have an independent ASTM test method designation. During the second NLACC-1 meeting, it was reported that if all test methods contained in the specification standards but not identified as specific ASTM test methods were included in the program, some 80 additional test methods would be added to the program. NVLAP staff indicated that it intended to include in the program only the test methods which were explicitly requested.

In the comments received from the public, it was clearly pointed out that the test methods identified in ASTM C739 should be included in the program because of their use in mandatory standards being promulgated by the Consumer Product Safety Commission (CPSC). The Committee agreed that it was desirable to include test methods from ASTM C739 in the program. Specifically, this would mean that four test methods should be added to the program; (1) flame resistance; (2) corrosion; (3) moisture absorption; and (4) odor emission. The Committee, however, questioned the inclusion of the test method on odor because of the nature of that test.

The Committee also agreed that it was desirable to add test methods which are an integral part of the GSA specification HH-I-515 but which do not have a unique identification. Using the program provision that only the latest version of the standards and test methods would be included in NVLAP, the test methods in HH-I-515D which should be added to the program are for: (1) settled density; (2) smoldering combustion; (3) corrosion; (4) moisture absorption; (5) odor emission; (6) starch; and (7) fungus.

The tests for corrosion and moisture absorption in ASTM 739 and HH-I-515D are not identical and each would be added to the program. However, the Committee took cognizance of the difficulty in conducting the odor emission test according to the ASTM 739 procedures and the qualitative nature of both odor emission tests and recommended that the odor emission tests not be included in the NVLAP-1 at this time.

Some respondents also suggested that additional test methods contained in the CPSC standards be included in the program. These standards are based upon HH-I-515 although there are significant differences. Since a request to include CPSC standards was never a part of the final finding of need for this program, a formal request to include the CPSC standards should be made and in response to

such request an extension to the finding of need would have to be made using the NVLAP procedures. However, it may be more practical for the CPSC to request that its standards be included using the optional NVLAP procedures (15 CFR Part 7B proposed on October 25, 1978, 43 FR 49812-49818) if and when these procedures become final.

The CPSC staff, in a comment on the proposed criteria, has requested that four test methods of interest to the CPSC be added to the program. The Committee suggested adding these methods to the program if at all possible when the final NVLAP criteria are published. The Department is concerned, however, about differences between some of the test methods as they appear in the iterim CPSC regulations and the proposed final CPSC regulations. For this reason, the Department believes that the most appropriate way to include CPSC requirements in the NVLAP Program is to ask the CPSC to clarify its intent with respect to all aspects of their relevant regulations and to make a request to the Department for inclusion of the CPSC requirements under provisions of Part 7B of the NVLAP procedures which are expected to be published in final form early in 1979.

In response to the Committee's recommendations, all test methods of ASTM C739 and of HH-I-515 not already included in the program will be added to the program with the exception of the test for odor emission.

In deciding which test methods were to be included in this program, it was reasoned that standard methods which were not referenced in the thermal insulation material specifications (standards) included in the final finding of need for the program would not be included in the program. For this reason, ASTM test method D1623 which the requestor originally identified was not included in the program. The final finding of need did not specifically address those test methods contained in the standards which do not have unique designations. In response to the recommendations of the Committee, ASTM D1623, D732, and E408 which a respondent suggested should be included will not be included in the program. ASTM test method D1622 is included in the program. (Unfortunately, due to a typographical error, this test method was shown incorrectly as 01/D18-ASTM D162 in the proposed criteria.)

At the suggestion of the Committee, an index has been added as Appendix 3 which identifies the formal designation and title of those test methods and recommended practices for which accreditation can be granted under NVLAP-I.

10. What should be the frequency of on-site examinations under the program? Three of four respondents who commented on this question indicated that two-year intervals plus or minus three months was adequate. However, the other respondent suggested that inspections should occur every 12 months. Concern for the magnitude of fees in relation to the frequency of on-site examination was given as one reason why a two-year interval would be more appropriate since the cost of the program for the laboratories will depend upon the frequency of on-site examinations. If the fees and charges become too great, few laboratories will apply and accordingly there would be a possibility that there will be no program. Less frequent examinations may result in a reduction in credibility of the program although the magnitude of any such reduction is unpredictable. More frequent examination would provide a check to ensure that the latest versions of the test methods are being used. In the proposed fee structure which was published in the FEDERAL REGISTER notice on September 29, 1978 (43 FR 45298), it was assumed that a "typical" laboratory involved in the program would request to be accredited for nine test methods at a cost of $1,225 per year if examined every two years (including the costs of the proficiency tests). The costs of unannounced visits to one-third of the laboratories in the program was estimated to be six percent of the cost. If the on-site examination were performed every year and unannounced visits were eliminated, the fees would almost double if it were necessary to complete all elements of the evaluation. In actual practice, some additional costs could be saved since a complete evaluation (evaluation of all the data about the laboratories) would not have to be done every year. In response to the recommendations of the Committee, NVLAP will conduct examinations annually for the first two years in which a laboratory is enrolled in the program and biannually thereafter. NVLAP will also retain provisions for random, unannounced visits to accredited laboratories as presently stated in the proposed criteria, particularly for cases where poor proficiency test results suggest a potential problem.

11. Should the stated precision and accuracy of test results be changed? Three respondents expressed concern about the precision and accuracy of test results that are stated in Appendix 1 to the proposed criteria. One respondent suggested deletion of the precision and accuracy requirements and a clarification of the definitions of various terms used in Appendix 1. Another respondent suggested that the accuracy limit for 01/D13-ASTM C519 should be changed to plus or minus five percent rather than the stated plus or minus two percent. The third respondent suggested that Appendix 1 should be revised to convey recommended repair and preventive maintenance cycles for each piece of equipment covered by the test methods because proper repair and maintenance are critical to the production of accurate data. Precision and accuracy values will be particularly important for those test methods where proficiency samples are used. The values suggested in Table 1 are the best available at this stage in the program. Changes to some values may be appropriate as experience is gained in implementating the program. In some instances, the values are specified in the product standards themselves and are not likely to change. Values for precision and accuracy are provided for many of the test methods even though proficiency tests are not being required for these methods. Such values are meant as guides or goals for the laboratory.

With regard to 01/D13-ASTM C519, the target values of plus or minus two percent were intended for classifying "good" laboratories. Limints approximately 50 percent greater (± three percent) define "acceptable" laboratories for this aspect of NVLAP accreditation. It was also pointed out that part of the reason that five percent limits were suggested by the respondent is that the materials tested may not be homogeneous, thereby accountin for part of the deviation. It was recommended that limits of plus or minus two percent for "good" laboratories, based on the use of homogeneous materials, was appropriate. The Committee did not believe that repair and maintenance schedules were necessary for inclusion in the criteria since actual performance of the laboratory was being monitored through periodic proficiency testing and on-site examinations. In response to the Committee's recommendations, the accuracy limit of plus or minus two percent of 01/D13-ASTM C519 was retained. A clarification of how precision and accuracy requirements will be used is included in the portion of this criteria labeled Proficiency Testing.

12. Which versions of test methods are included in the program? Two repondents suggested that Appendix 1 should contain a clear statement to the effect that the latest versions of the test methods shall be applicable. The Committee agreed and in response to its recommendation, such clarification has been added to Appendix 1.

13. Will full fees and charges be paid by a laboratory participating in successive NVLAP programs? One respondent requested a clarification with respect to the fees and charges. Specifi-

cally, will a laboratory which seeks accreditation for a number of products be required to pay the fixed charge for each product area? The Department believes that charging full fees for each of several programs a laboratory may participate in is not appropriate. As successive NVLAP programs are established, it is the Department's intent to eliminate the duplication of data and to consolidate visits to a laboratory thereby keeping fees to a minimum. It is the policy of NVLAP to accredit laboratories as inexpensively as possible without compromising the effectiveness of the program.

14. Should examiners and evaluators be exclusively government employees? Two respondents commented on issues related to the use of examiners and evaluators. One respondent suggested that the major emphasis of the program should be geared toward on-site peer examination with frequent proficiency testing. The other respondent expressed the belief that examiners and evaluators be full-time government employees in order to insure uniform evaluation. Peer evaluation is a long term goal of the program. When a group of peers is identified and trained so as to ensure consistent evaluation, more emphasis will be placed on this approach. In the interim, the program will use full-time government employees or contract employees who have specific evaluation skills. Although the program will strive for uniform evaluation, it is not necessarily true that using all full-time government employees will ensure such uniformity. NVLAP should be open in the long term to the use of contractor services and other methods of providing on-site examination and evaluation. The Committee recommended that no change in the operating process was necessary at this time, and its recommendation has been accepted.

LABORATORY ACCREDITATION CRITERIA

The final general and specific criteria to be used to accredit laboratories which test thermal insulation materials under the National Voluntary Laboratory Accreditation Program (NVLAP) of the Department of Commerce are contained in the following paragraphs. These criteria have been developed in compliance with the NVLAP procedures (15 CFR Part 7) and form the basis for accrediting testing laboratories which voluntarily request such accreditation.

*Instructions for Making Application.* Any testing laboratory which desires accreditation as a NVLAP accredited laboratory testing thermal insulation materials using one or more of the test methods in the program may request such accreditation from the Assistant Secretary of Commerce for Science and Technology, Department of Commerce, Washington, DC 20230. Each request will be acknowledged upon receipt, and will be forwarded to the National Bureau of Standards (NBS) for further action. NBS will transmit materials describing the program and an application form which will allow the requesting laboratory to identify the specific test methods for which it desires accreditation. When the requesting laboratory returns the completed application and requisite fees, it becomes an official applicant in the program.

*Basic Conditions for Accreditation.* In order for a laboratory to be accredited under these NVLAP procedures, it must, among other things, agree to the following basic conditions:

1. It must submit to examination and audit procedures established for the program initially and on a continuing basis;

2. It must pay accreditation fees and charges; and

3. It must avoid reference by itself and forbid others utilizing its services from referencing its accredited status in consumer media and in product advertising or on product labels, containers and packaging or the contents therein.

In addition, the applicant laboratory must recognize that compliance by testing laboratories with these general and specific criteria and accreditation of a laboratory by the Secretary shall in no way relieve such laboratory from the necessity of observing and being in compliance with existing Federal, State and local statutes, ordinances, and regulations that may be applicable to the operation of such laboratory, including consumer protection and anti-trust laws.

This accreditation program consists of three distinct operations. First, the laboratory submits written information in response to a questionnaire based on the requirements of the general and specific criteria. These written responses are evaluated, and if the laboratory is judged to meet the criteria based on these responses, an on-site examination is arranged. The second operation is to conduct an on-site examination of the laboratory with appropriate equipment to compare the observed characteristics of the laboratory with written information submitted by the laboratory and with the criteria. The third operation is to arrange for and obtain data from proficiency tests which are part of the program. An evaluation of the written information, the on-site examiners' assessment, and proficiency testing data all taken together will form the basis for making a decision about whether or not to accredit a specific laboratory.

*General Criteria.* For initial accreditation and continued accreditation, an applicant laboratory shall provide the information listed below for the general product and testing areas for which accreditation is sought. This information will be formally requested on a questionnaire sent to each applicant testing laboratory upon receipt of that laboratory's application and requisite fees and will be verified by on-site examiners.

A single or double asterisk preceding a section number signifies that the section must be included in quality control procedures as explained in section G2.6.

Criterion G1. *The laboratory has an organizational structure that enables it to develop and maintain a testing capability to perform satisfactorily the functions for which accreditation is sought.*

G1.1 A description of the laboratory's organization including:

*G1.1.1 The complete legal name and address of the main office, or parent company if part of a larger organization;

*G1.1.2 The name and location of the laboratory if different from that stated in G1.1.1;

G1.1.3 A general description of the laboratory, including, its equipment and facilities;

G1.1.4 The laboratory's and parent company's (if any) principal ownership and management structure, including the names and positions of the principal officers and board of directors;

*G1.1.5 An outline or chart showing the titles or positions of all key management and supervisory personnel in each operating, support, and service unit in the laboratory's functional organization, and their reporting relationships relative to this accreditation request;

**G1.1.6 The names and resumes of the individuals assigned to each of the positions identified in G1.1.5 or the personnel requirements for the individuals occupying those positions.

G1.2 A listing of the relevant technical services performed.

*G1.3 A list of test method standards for which accreditation is sought, showing the approximate number of times each test is performed per year.

*See sections 2.6.1 and 2.6.2 for meaning of asterisks.

NOTE.—This criterion and its sections require a relatively straightforward description of the testing laboratory. An evaluator will review written information supplied by the laboratory in response to this criterion for appropriate definition of authority and responsibility, for the personnel qualifications, and for consistency between services offered and personnel and facilities available. An on-site examiner will verify the responses to the questionnaire regarding the laboratory's facilities and organization, will compare resumes of personnel with personnel requirements submitted by the laboratory, and will conduct other appropriately

related examinations. Appendix 2 is provided as a guide to applicant laboratories for reporting the requirements for management and technical personnel involved in the testing area for which accreditation is sought. The examples given in Appendix 2 are guides to the type of information desired and should not be interpreted as minimum or even typical requirements for personnel in this program.

Criterion G2. *The laboratory has and maintains a quality control system to assure the technical integrity of its work.*

**G2.1 A description of the laboratory's system for auditing and monitoring its test work, including procedures for:

**G2.1.1 Preventing or reducing testing errors and discrepancies;

**G2.1.2 Identifying and correcting known errors and discrepancies;

**G2.1.3 Specifying the frequency and the sample size (quantity) of the audit sampling of the test results of testing personnel.

**G2.1.4 Obtaining tracing the validity of, and responding to complaints and charges received by the laboratory about the quality of its test work.

**G2.2 A description of the laboratory's system for insuring that all test equipment and reference standards are calibrated or verified to the requisite degree of accuracy including procedures for:

**G2.2.1 Maintaining written descriptions of the standardization (calibration and verifications) procedures for all test equipment and reference standards;

**G2.2.2 Maintaining standardization records, including:

(a) Equipment, description or name,

(b) Name of manufacturer,

(c) Model, style, and serial number or other identification,

(d) Equipment variables subject to standardization,

(e) Range of operation and range of standardization,

(f) Resolution of the instrument and allowable error tolerances on readings,

(g) Standardization schedule (intervals),

(h) Date and result of last standardization and date of next standardization,

(i) Name of laboratory person or standardization service providing the above standardization,

(j) Traceability to NBS or other authority as required;

**G2.2.3 Insuring that all test equipment is recalled periodically for verification and/or recalibration.

**G2.3 A description of the laboratory's system for assuring that all equipment and facilities are properly maintained (e.g., routine operational checks and upkeep, maintenance of instructions for equipment operation and repair, power sources, electricity, and gases).

**G2.4 A description of the laboratory's system for controlling the flow of work, including procedures for at least the following:

**G2.4.1 Specifying workflow from reception to reporting;

**G2.4.2 Specifying the functions to be performed at each step along the workflow path;

**G2.4.3 Data recording, processing and reporting;

**G2.4.4 Selecting specimens for testing;

**G2.4.5 Retention or disposal of specimens tested.

**G2.5 A description of the laboratory's system for maintaining records, including records of:

**G2.5.1 Test reports;

**G2.5.2 Data generated during testing;

**G2.5.3 Receiving, shipping and disposal of test samples;

**G2.5.5 Personnel (including training);

**G2.5.6 Complaints contesting results.

G2.6 A copy of the laboratory's quality control manual or procedures which should:

G2.6.1 Explicitly include information required by sections of these general specific criteria preceded by a single asterisk (*);

G2.6.2 Clearly state where in the laboratory is maintained the information required by sections of these general and specific criteria preceded by a double asterisk (**), or explicitly include this information.

G2.6.3 Explicitly include the procedures to be followed for maintaining the manual current and the name or title of the person responsible for implementing those procedures.

NOTE.—In assessing a laboratory's capability to meet this criterion, an evaluator, based on information submitted by the laboratory, will be making judgments about the adequacy of the test auditing and monitoring program of the laboratory, the adequacy of the laboratory's calibration system, the appropriateness of the laboratory's equipment and facility maintenance, the laboratory's system for controlling the flow of work, the laboratory's system for maintaining records, and the laboratory's system for responding to complaints. The on-site examiner will verify the information supplied by the laboratory and examine other characteristics as appropriate.

The laboratory's quality control system must be documented by a quality control manual or written procedures. The purpose of the manual is to provide, in one convenient location, detailed descriptions, or clear instructions where such descriptions may be found, of the operating and quality assurance procedures governing the human and physical resources of the laboratory. The manual must be available at all times to serve as a guide for the laboratory staff, and procedures must exist for maintaining and periodically updating it. It is subject to review during on-site laboratory examinations by NVLAP personnel. An example of how such a manual might be structured is presented in the American Council of Independent Laboratories (ACIL) publication, "Quality Control, Requirements for a Testing and Inspection Laboratory, Manual of Practice—1976." As a minimum, the manual should be structured in accordance with sections G2.6.1, G2.6.2, and G2.6.3 above.

Criterion G3. *The laboratory is operated in accordance with generally accepted professional and ethical business practices.*

G3.1 The laboratory has a stated and effective policy which assures that reported values accurately reflect all properly measured data.

G3.2 Documentary evidence assuring that:

G3.2.1 Test work is limited to that for which competence and capacity are available;

G3.2.2 Test data, records, and reports are treated as proprietary information and are released only to such other individuals as the client agrees to in writing;

G3.2.3 Complaints contesting test results are considered and properly handled.

G3.3 For a laboratory that is part of a larger organization, dependent on manufacturing or supplier interest: evidence that there is an independent decisional relationship between the testing and other components of the organization. (This may be demonstrated, for example, by a letter of authority from the parent organization management.)

G3.4 For a private laboratory that is not part of a larger manufacturing or supplier organization: evidence that there is an independent decisional relationship between the laboratory and other organizations, including clients (e.g., a policy declaration or a contract provision that the laboratory's relationships with these organizations are not allowed to affect the laboratory's capacity to render reports of findings objectively and without bias).

NOTE.—An evaluator will review the information supplied by the laboratory and compare it with other information provided under criteria G1 and G2 to evaluate compliance with this criterion. Particular attention will be paid under this criterion relative to complaints received about the laboratory by the Assistant Secretary. On-site examiners will verify the information supplied and will address any complaints which may have arisen.

Criterion G4. *During the processing of the application and following accreditation, the laboratory reports to NBS, within specified times, any substantive changes in the laboratory related to the general and specific crite-*

*ria, and documents these changes as per the original submission.*

G4.1 A description of the change, mailed within 30 days following a substantive change relative to the general and specific criteria.

G4.2 Implementation within 45 days of the "official notice" date, or by the effective date, whichever is later, of all changes necessitated by a revision in the standard test method, unless another date is established by notice from NBS. (The "official notice" date is the date the organization responsible for the standard test method gives notice in its official publication that the standard has been revised. In some cases the organization may indicate a later "effective" date which will be used instead.)

NOTE.—An evaluator will evaluate changes as they may affect other aspects of the criterion and on-site examiners will report the absence of unreported substantive changes.

*Specific Criteria.* For each standard test method for which accreditation or continued accreditation is sought, an applicant laboratory shall provide the information required.

Criteria S1. *The laboratory is staffed with trained and experienced personnel competent in the principles and practices of measurement in the area of testing for which accreditation is sought.*

**S1.1 A list of, or the requirements of, the personnel responsible for and capable of conducting the tests specified in the test method, if not specifically addressed in the response to section G1.1.6 of the general criteria.

**S1.2 A description of the specific training program to assure proficiency and uniformity in applying the test method to the requisite degree of accuracy and precision (e.g., methods for ensuring job competence, probationary periods under close supervision, audits of test work performed, and performance reviews with affected personnel).

NOTE.—For each test method for which a laboratory requests accreditation, an evaluator will evaluate the competence of the personnel function and the training function. On-site examiners will compare resumes of personnel at the laboratory with the personnel requirements or resumes submitted by the laboratory in evaluating the laboratory under this criterion. Examiners will also address how newly trained personnel move into the work force, the nature of periodic reviews of competence, and the kinds of continuous education programs available. The on-site examiner will verify the content and utilization of training programs.

Criterion S2. *The laboratory's facilities and equipment are appropriate to the functions for which accreditation is sought and are properly maintained.*

**S2.1 A description of the test setups and a list of test instruments used, sufficiently identified to allow correlation with the calibration information requested in criterion S3. (Provide diagrams and photographs, if helpful in demonstrating conformance with the test requirements.)

**S2.2 A description of all special or laboratory-fabricated equipment listed in section S2.1, and evidence that this equipment conforms to the requirements of the test method and assures requisite accuracy and precision. (Provide schematics or shop drawings with annotated photographs, if helpful in demonstrating conformance with the test requirements.)

**S2.3 A description of any auxiliary equipment, facilities, or procedures required by or used for the test method, such as: storage and conditioning of samples; environmental conditions or controls (including how compliance is measured and percentage of time within required limits); automatic data collection, reduction or analysis; housekeeping, safety and custodial care; maintenance of laboratory equipment and facilities.

**S2.4 An inventory of the laboratory's collection of applicable standards and other documents referred to or used for the test method.

**S2.5 Evidence by analytical or other means that the test results are not degraded by the use of equipment or facilities which have received noncritical modifications not in strict conformance with the standard method of test.

NOTE.—For this criterion, an evaluator would evaluate the setups, instrumentation, special equipment, facilities, etc. of the laboratory as compared to the requirements of each test method for which accreditation is sought. Evidence would be examined to confirm that non-critical modifications have not degraded the test results. Information provided will not be considered confidential business data, trade secrets, or proprietary information. The on-site examiner during his visit to the laboratory would explore evidence justifying claims made by the laboratory by comparing selected measurements with the requirement of the test methods.

Criterion S3. *The laboratory's equipment and procedures are standardized (calibrated and verified) periodically.*

**S3.1 A description of the standardization equipment (including diagrams, etc., as appropriate) and a listing of the standardization schedule to ensure continuing adequate performance and accuracy of results.

**S3.2 Either references to recognized standardization procedures or descriptions of standardization procedures used for each laboratory standard and test instrument to assure that all measurements can be made to the requisite precision and accuracy.

**S3.3 A listing of the reference standards and materials being used with the test method, including:

**S3.3.1 The source, identity, latest dates and results of the standardization of the reference standards and materials;

**S3.3.2 For other than specifically required standards and standard reference materials, the procedures used to reference the standards to national standards;

**S3.3.3 Clear identification and differentiation between reference and working standards.

**S3.4 A listing of the measurement assurance, collaborative reference or other program(s), appropriate to the test method, in which the laboratory participates.

NOTE.—This criterion relates to the laboratory's fundamental program for establishing and maintaining basic references upon which its testing program is built. In some cases, much of the standardization procedures required herein will be part of an overall computerized laboratory program. In other cases, such standardization will be accomplished on a test method by test method basis. The evaluators and on-site examiners will be responsive to evaluation and verification in either case.

Criterion S4. *The laboratory maintains documented and acceptable in-house operating protocols for the test method to assure the requisite degree of accuracy and precision.*

**S4.1 A copy of the in-house instructions, if any, supplementing the instructions of the standard test method, including those necessary for equipment maintenance and calibration checks, sample preparation, testing and disposal, data reduction, and reporting of test results.

**S4.2 A copy of the instructions to the subcontractor and a description of how the laboratory assures the required precision and accuracy for any highly specialized part of the test method which is subcontracted.

NOTE.—Only that laboratory having the measuring equipment by which final test values are obtained can be accredited. If data obtained using one test method in this accreditation program are used as input data for a second test method, a laboratory seeking accreditation for the second method must be accredited for the first method also. In a laboratory's operating practice, if final test values for the first test method are obtained from an unaccredited laboratory, the client of the accredited laboratory must be notified. In general, if a NVLAP accredited laboratory does not or cannot, because of equipment failure, conduct a test method for which it has been accredited, it may supply data obtained from an unaccredited laboratory provided its client has been notified. If the data are obtained from a laboratory which is accredited for the test method, such notification is not necessary.

**S4.3 Evidence by analytical or other means that the use of noncritical variations in the procedure from that specified in the standard test method does not degrade the results of the test.

**S4.4 Evidence demonstrating the capability of satisfactorily complying with the intent of the standard test method when any variation in test equipment or procdures is made necessary by environmental conditions or by special requirements of a product for which accreditation is sought.

**S4.5 A sample test report (with name of client deleted) showing test results accompanied by the raw data and a copy of the worksheet showing the steps to reduce the raw data and the method of data reduction or reference to appropriate "calculation" sections of the test protocol or standard.

NOTE.—This criterion deals with the fundamental ability of the laboratory to obtain test results to the required precision and accuracy of the test methods. When reviewing data submitted by the laboratory, the evaluator's emphasis will be placed upon evaluation of instructions and procedures for the staff of the laboratory and for any subcontracted segments of the work. The applicability of nonconforming test procedures will also be carefully evaluated. A sample report will be reviewed and the on-site examiners will look for evidence that such sample reports are typical rather than specially produced for the accreditation program.

*Proficiency Testing.* Of utmost importance to the user of laboratory services is whether or not a testing laboratory consistently obtains accurate results. The existence of facilities, equipment and personnel, verified by a laboratory's ability to meet the preceding criteria, establishes the capability to obtain such results. An analysis of actual test results is necessary to determine if these ingredients do in fact produce the desired results.

A proficiency testing program may be considered an interlaboratory testing program in which specially prepared samples are distributed—on a periodic schedule. The samples are tested by the participating laboratories in accordance with standard test methods and the results reported to proficiency test evaluators. The "true" or target test result for any particular test is obtained by one of the following ways:

(1) *Manufacturer.* For some properties of a sample, it is possible to determine what the test result should be from information on how the sample was made. However, each case has to be thoroughly examined before manufacturing information can be used as the basis for determining the target or "true" values. This approach is often useful in proficiency testing programs requiring qualitative responses or identifications only (e.g. is starch present or not).

(2) *Reference Laboratory.* Sometimes a single laboratory, such as the National Bureau of Standards, has sufficiently high competence and national recognition that it can be used to provide the target or "true" test result. This is particularly useful when the laboratory has the capability of and has agreed to carefully verify the correctness of every important dimension of its apparatus and every step in its application of the standard test method.

(3) *Group of Reference Laboratories.* When no single laboratory can be given national recognition as having sufficiently high competence to set the national standard, it sometimes is possible for a proficiency test coordinator to use the results from a number of reputable laboratories. This would be accomplished by pooling their results (after a suitable statistical check on the agreement among the results) in order to establish the target or "true" test result.

(4) *Reference Method.* Under NVLAP procedures, the standard test method will usually also be the reference method. However, in some cases the standard test method may be so broadly written as to permit a wide variety of test equipment and testing protocols. If in such a case a particular protocol and equipment combination is recognized as a reference method (or can be shown through error analysis to yield results well within the required precision and accuracy), then the results obtained with that method by one or more "reference" laboratories is used to establish the target test result.

(5) *Participants.* If there is a sufficient number of participating testing laboratories and an insufficient number of reference laboratories, then the test results of the participating laboratories are sometimes pooled by a proficiency test coordinator to establish the target result for the individual participants. It is important that the pooled test results include only test data from laboratories known (on the basis of all available information) to be following the standard test method. This is determined not from the test data, but from an inspection report and from information submitted originally and with the test data.

(6) *Previous Proficiency Test and Interlaboratory Data.* Sometimes the same samples are used as were used in a previous proficiency test. If so, the new target test result is based on a weighted pooling of current and previous test results.

Most of the proficiency testing specified for NVLAP will consist of methods described in (5) and (6).

Another type of proficiency testing program makes use of samples of products which are being routinely tested. In this case, the sample, assumed to be homogeneous, is split into two parts, with the laboratory being evaluated testing one part and a reference laboratory or laboratories testing the second part. Typically, the reference laboratory tests its portion of the sample only occasionally and comparisons of its results with the results obtained by the laboratory being evaluated are used to determine proficiency.

Although some sort of proficiency test could conceivably be designed for all test methods, that step is not always appropriate. Some test methods depend upon qualitative observations and others depend upon the proper and sequential use of measuring equipment. In the latter situation, proficiency can often be more easily established through observation by the on-site examiners. In addition, if proficiency is established for one test method, it would not appear to be necessary to conduct a second proficiency test for a method which is very similar and which simply requires the demonstration of the same skills as were demonstrated in the first test method.

On the basis of these considerations, proficiency tests have been arranged for the test methods shown in Table 2 of Appendix 1. This Table and the description which follows are not intended to be part of the criteria but rather are part of the program operations. Although it is intended that proficiency must be demonstrated for all the test methods shown in Table 2, that may not be feasible if an insufficient number of laboratories request accreditation for a given test method. In such a case, any fee collected for the proficiency test would be returned to the applicant laboratory and the accreditation would be based only on the information submitted by the laboratory and the on-site examiner's review.

Values for the desired precision and accuracy for the test methods in NVLAP-1 are shown in Table 1 of Appendix 1. For test methods requiring proficiency testing (Table 2), the precision and accuracy figures represent the values required for demonstrating "good" laboratory performance and the desired degree of proficiency. Approximately 95 percent of the laboratories should be able to achieve this. Limits approximately 50 percent greater are used to define "acceptable" performance for accreditation purposes. The frequency of proficiency testing is also shown in Table 2 of Appendix 1. For test methods not requiring proficiency testing, the precision and accuracy values suggest guides for desired capability.

*Initial and Periodic Examination and Audit Procedures.* Once a laboratory has satisfactorily completed the written questionnaire and evaluators have concluded that the laboratory appears to be qualified to conduct the tests for which accreditation has been requested, NBS will arrange for a mutually convenient time for the on-site examiners to visit the laboratory. At

the time of that visit, the laboratory will be provided with the inspection guide which the on-site examiner will use during the visit. The visit may last from one to three days or even longer depending on the number and complexity of the test methods for which accreditation is sought. The on-site examiner will conduct an exit interview with the laboratory management at the conclusion of the examination.

Laboratories will be granted accreditation for one year. The yearly accreditation fee must be paid each year. The fees and charges for this program are described in a separate notice published in this issue of the FEDERAL REGISTER.

Based upon the recommendation of the Committee, a scheduled on-site evaluation and a complete review of a laboratory's capability will be completed each year for the first two years and every two years thereafter. Unannounced visits may occur at any time with approximately one-third of the laboratories being visited each year. These visits may be initiated by the use of a random selection scheme or because the laboratory appears to have testing problems. A complete review of the laboratory is not planned for the unannounced visits. In the case of randomly selected visits, key items in the Laboratory will be checked. In the case of visits due to apparent problems, items relating to the problem will be checked. However, in both cases additional inspection may take place at the discretion of the examiner.

The National Bureau fo Standards will be responsible for the professional and technical performance of all examiners. The description which follows is not intended to be part of the criteria but rather is part of the program's operations. It is provided in order to give a potential applicant laboratory an indication of background and capabilities of personnel who will be employed to evaluate the laboratories. These procedures are subject to change as experience in the operation of the program is gained.

Evaluators will carefully review the completed questionnaire and prepare an evaluation of the laboratory indicating whether appropriate personnel, facilities, equipment, and procedures are provided which could produce accurate results. Examiners will be carefully trained to conduct the on-site examinations, so that these examinations will be consistently performed among the laboratories and so that subsequent examinations will be consistent. Personnel who are experienced in performing the specific test methods included in the program and in performing day-to-day laboratory operations will be used. These personnel will be government employees or will be specifically retained to perform certain aspects of the work. One of the key features in selecting personnel to work on this program will be the minimization of potential conflicts of interest.

REQUESTING ACCREDITATION

Any laboratory interested in being accredited by the Department of Commerce should write to the Department requesting information about the program. The address is: Assistant Secretary for Science and Technology, U.S. Department of Commerce, Room 3864, Washington, DC 20230. No commitment is implied or intended by such a request. The laboratory will receive a formal application accompanied by material which describes the program.

Laboratories will be accredited in groups so as to minimize costs of employing test method experts, to minimize travel costs, and to avoid one laboratory's receiving exclusive recognition. All applications postmarked by February 28, 1979 and accompanied by the required fee will be included in the first group of laboratories to be considered for accreditation. Applications received after this date will be included in a second group of laboratories to be considered for accreditation six months to one year later. It is suggested that those laboratories wishing to be in the first group mail a request for an application by February 7, 1979.

Issued: January 12, 1979.

JORDAN J. BARUCH,
*Assistant Secretary for Science and Technology.*

[3510-13-C]

Appendix 1

U.S. Department of Commerce
National Voluntary Laboratory Accreditation Program (NVLAP)

Criteria and Compliance
Information Supplement for
Thermal Insulation Materials
1/10/79

Table 1 establishes the performance requirements for the initial and continued accreditation of laboratories that test thermal insulation materials. It also lists measurement assurance aids which are available for helping laboratories maintain their testing performance. Evidence of appropriate use of such aids or their equivalent is required for accreditation.

The performance requirements are specified in terms of the desired precision and accuracy in applying the test method; that is, the overall precision and accuracy of application involving such potential sources of error as test operator test environment, test equipment, test protocol and test sample. The capability of a laboratory to perform to these overall requirements is judged from the written information it submits in response to the examination material and from the findings of the on-site inspection. The ability of the laboratory to apply this capability is determined from the results of its performance in a proficiency testing program.

A NVLAP proficiency sample number designation and frequency of testing is shown in Table II for those test methods currently subject to proficiency testing requirements. Note: Participation in an NBS accepted collaborative reference program (CRP) may be accepted as partial fulfillment of the NVLAP proficiency testing requirement.

Precision is expressed in terms of repeatability (R) and comparability (C). Repeatability is a measure of the ability of a laboratory to repeat its own test result on the same or essentially identical samples. Comparability is a measure of the ability of a laboratory to compare two materials (intended for the same use), obtaining comparative test results (e.g. difference between or ratio of the two test results) consistent with comparisons obtained by other laboratories. Accuracy (A), is a measure of the ability of a laboratory to obtain a test result in agreement with the "true" or target test result.

The limits specified in the table for precision and accuracy are for "good" performance. Approximately 95% of the laboratories should be able to achieve this. Limits approximately 50 wider are used to define "acceptable" performance for accreditation purposes. CAUTION: The limits presented in this table for laboratory accreditation purposes should not be interpreted as setting specification limits on products.

In addition to utilizing the measurement assurance aids listed below for each test method, each laboratory should maintain a uniform batch of test specimens for more frequent checks of its performance (or should use other means for this purpose). The sources of currently available measurement assurance aids are listed at the end of the table. The table shows those programs currently available. As other aids become available, especially for methods not now covered, and are determined to be desirable for NVLAP they will be added to the table.

The standards identified in this Appendix for accreditation under the provisions of NVLAP refer to the latest versions applicable.

TABLE 1

| NVLAP Code Test Method No. | Complexity | Short title (property) Subtitle (if applicable) | Desired Precision and Accuracy | Measurement Assurance Aids |
|---|---|---|---|---|
| 01/C01 ASTM C739 (para. 7.7 in 77 version) | $B_2$ 1/ | Corrosiveness; Cellulosic fiber (loose-fill) | Non-quantitative Test | |
| 01/C02 HH-I-515 (para. 4.8.5 in D version) | $B_2$ | Corrosiveness; Cellulosic fiber (loose-fill) | Non-quantitative test | |
| 01/D01 ASTM C136 | $B_1$ | Sieve or screen analysis | R=4 percent aggregate A=4.4 percent aggregate | SRMs 1017a 2/ 1018a, 1019a |

1/ See footnotes at the end of the table

| NVLAP Code Test Method No. | Complexity | Short title (property) Subtitle (if applicable) | Desired Precision and Accuracy | Measurement Assurance Aids |
|---|---|---|---|---|
| 01/D02 ASTM C167 | $B_1$ | Thickness and density Blanket and batt | Thickness: A-1/16 in. (1.0 mm) Density: A=2% | |
| 01/D03 ASTM C209 (para. 6 in 72 version) | $B_1$ | Thickness Board (cellulosic fiber) | A=0.1 mm | |
| 01/D04 ASTM C209 | $B_1$ | Water absorption, 2 hr Board (cellulosic fiber) | A=25 of percent water absorption | CTS CRP[3/] |
| 01/D05 ASTM C209 by D1037 (para. 100-106 in 72 version) | $B_1$ | Water absorption, 24 hr Board (cellulosic fiber) | A=25 of percent water absorption | CTS CRP |
| 01/D06 ASTM C209 by D1037 (para. 107-110 in 72 version) | $B_2$ | Linear expansion Board (cellulosic fiber) | A=0.1 percent expansion | |
| 01/D07 ASTM C272 | $B_1$ | Water absorption Core materials | A=25 of percent water absorption | CTS CRP |
| 01/D08 ASTM C302 | $B_1$ | Density Preformed pipe insulation | Thickness: A = 1 mm Density: A = 2% | |
| 01/D09 ASTM C303 | $B_1$ | Density Preformed block insulation | A = 2% | |
| 01/D10 ASTM C355 | $B_2$ | Water vapor transmission Thick materials Desiccant method | A = 25% | CTS CRP |
| 01/D11 ASTM C356 | $B_1$ | Linear shrinkage Soaking heat Preformed high temperature insulation | R = 0.5 percent linear shrinkage A = 0.5 percent linear shrinkage | |
| 01/D12 ASTM C411 | $B_1$ | Hot-surface performance High temperature insulation | Warpage: A = 1 mm | |
| 01/D13 ASTM C519 | $B_2$ | Density Loose-fill (fibrous) | A = 2% | |
| 01/D14 ASTM C520 | $B_2$ | Density Granular loose-fill | A = 2% | |
| 01/D15 ASTM D756 | $B_2$ | Weight and shape changes Accelerate service (Proc. A) Plastics | A=0.5 percent weight change A=0.5 percent linear dimension change A=1.5 percent volume change | |
| 01/D16 ASTM D756 | $B_2$ | Weight and shape changes Accelerated service (Proc. B) Plastics | Same as for 01/D15 | |

| NVLAP Code Test Method No. | Complexity | Short title (property) Subtitle (if applicable) | Desired Precision and Accuracy | Measurement Assurance Aids |
|---|---|---|---|---|
| 01/D17 ASTM D756 | $B_2$ | Weight and shape changes Accelerated service (Proc. E) Plastics | Same as for 01/D15 | |
| 01/D18 ASTM D1622 | $B_2$ | Apparent density Rigid cellular plastics | A = 4% | |
| 01/D19 ASTM D2126 | $B_2$ | Response to thermal and humid Aging (Procedure B) Rigid cellular plastics | A=0.5 percent weight change A=0.5 percent linear dimension change | |
| 01/D20 ASTM D2126 | $B_2$ | Response to thermal and humid Aging (Procedure D) Rigid cellular plastics | Same as 01/D19 | |
| 01/D21 ASTM D2126 | $B_2$ | Response to thermal and humid Aging (Procedure E) Rigid cellular plastics | Same as 01/D19 | |
| 01/D22 ASTM D2126 | $B_2$ | Response to thermal and humid Aging (Procedure F) Rigid cellular plastics | Same as 01/D19 | |
| 01/D23 ASTM D2842 | $B_2$ | Water absorption Rigid cellular plastics | A = 1.0 percent absorption (by volume) | CTS CRP |
| 01/D24 ASTM C739 (para. 7.5 in 77 version) | $B_2$ | Moisture absorption Cellulosic fiber (loose-fill) | A=25% percent water absorption | CTS CRP |
| 01/D25 HH-I-515 (para 4.8.3 in D version) | $B_2$ | Moisture absorption Cellulosic fiber (loose-fill) | A=25% percent water absorption | CTS CRP |
| 01/D26 HH-I-515 (para. 4.8.1 in D version) | $B_2$ | Settled density Cellulosic fiber (loose-fill) | A = 3% | CTS CRP |
| 01/F01 ASTM D777 as modified by Federal Specification H-H-B-1008 | $B_1$ | Flammability Paper and paperboard | Char length: R = 3.6% A = 9.0% Fire resistance permanence: R = 6 percent increase in char length A = 10 percent increase in char length | |
| 01/F02 ASTM E84 | $B_3$ | Surface burning characteristics Building materials Loose-fill | Flame spread classification: A = 20% Smoke classification: A = 40% | CTS CRP |
| 01/F03 ASTM E84 | $B_3$ | Surface burning characteristics Building materials Blanket and batt | Same as 01/F02 | CTS CRP |
| 01/F04 ASTM E84 | $B_3$ | Surface burning characteristics Building materials Board and Block | Same as 01/F02 | CTS CRP |

| NVLAP Code Test Method No. | Complexity | Short title (property) Subtitle (if applicable) | Desired Precision and Accuracy | Measurement Assurance Aids |
|---|---|---|---|---|
| 01/F05 ASTM E136 | $B_1$ | Noncombustibility Elementary materials | Primarily a non-quantitative test | |
| 01/F06 ASTM C739 (para. 10.4 in 77 version) | $B_3$ | Flame resistance permanency cellulosic fiber (loose-fill) | A=20% flame spread | CTS CRP |
| 01/F07 HH-I-515 (para. 4.8.7 in D version) | $B_3$ | Critical radiant flux Radiant Panel (cellulosic fiber loose-fill) | A = 14% R = 20% | CTS CRP |
| 01/F08 HH-I-515 (para. 4.8.8 in D version) | $B_2$ | Smoldering combustion cellulosic fiber (loose-fill) | A = 20% R = 20% | CTS CRP |
| 01/S01 ASTM C165 | $B_2$ | Compressive properties Thermal Insulation Procedure A | A = 4% | CTS CRP TMVS[4/] |
| 01/S02 ASTM C203 | $B_2$ | Breaking load/flexural strength Preformed block insulation | Breaking load: A = 2% Flexural strength: A = 10% | CTS CRP TMVS |
| 01/S03 ASTM C209 (para. 9 in 72 version) | $B_2$ | Transverse strength Board (cellulosic fiber) | A = 4% | CTS CRP TMVS |
| 01/S04[5/] ASTM C209 (para. 10 in 72 version) | $B_2$ | Deflection at specified load Board (cellulosic fiber) | A = 0.2 mm | CTS CRP TMVS |
| 01/S05 ASTM C209 (para. 11 in 72 version) | $B_2$ | Tensile strength Parallel to surface Board (cellulosic fiber) | A = 15% | CTS CRP TMVS |
| 01/S06 ASTM C209 (para. 12 in 72 version) | $B_2$ | Tensile strength Perpendicular to surface | A = 4% | CTS CRP TMVS |
| 01/S07 ASTM C273 | $B_2$ | Shear test Sandwich construction | A = 25% | CTS CRP TMVS |
| 01/S08 ASTM C446 | $B_2$ | Breaking load/modulus of rupture Preformed pipe insulation | Breaking load: A = 2% Modulus of rupture: A = 5% | CTS CRP TMVS |
| 01/S09 ASTM D781 | $B_2$ | Puncture test Paperboard and fiberboard | R = 7.3% A = 8.0% | |

| NVLAP Code Test Method No. | Complexity | Short title (property) Subtitle (if applicable) | Desired Precision and Accuracy | Measurement Assurance Aids |
|---|---|---|---|---|
| 01/S10 ASTM D828 | $B_2$ | Tensile breaking strength Paper and paperboard | R = 5% C = 9% A = 11% | TAPPI CRP[6/] or CTS CRP |
| 01/S11 ASTM D1621 | $B_2$ | Compressive properties Rigid cellular plastics Procedure A - Crosshead | A = 6% | CTS CRP THVS |
| 01/T01 ASTM C177 | $B_3$ | Thermal transmission properties Low-temperature guarded hot plate Loose-fill | R = 1% A = 4% | SRM 1450 CTS CRP |
| 01/T02 ASTM C177 | $B_3$ | Thermal transmission properties Low-temperature guarded hot plate Compressible blanket and batt | R = 1% A = 4% | SRM 1450 CTS CRP |
| 01/T03 ASTM C177 | $B_3$ | Thermal transmission properties Low-temperature guarded hot plate Rigid board and block | R = 1% A = 4% | SRM 1450 CTS CRP |
| 01/T04 ASTM C236 | $B_3$ | Thermal conductance Guarded hot box | A = 4% | CTS CRP |
| 01/T05 ASTM C335 | $B_3$ | Thermal conductivity Pipe insulation | A = 4% | CTS CRP |
| 01/T06 ASTM C518 | $B_3$ | Thermal transmission properties Heat flow meter Blanket and batt | R = 1% A = 4% | SRM 1450 CTS CRP |
| 01/T07 ASTM C518 | $B_3$ | Thermal transmission properties Heat flow meter Board | R = 1% A = 4% | SRM 1450 CTS CRP |
| 01/T08 ASTM C518 | $B_3$ | Thermal transmission properties Heat flow meter Loose-fill | R = 1% A = 4% | SRM 1450 CTS CRP |
| 01/T09[7/] ASTM C653 | $B_3$ | Thermal resistance (Rec. Practice) Blanket (mineral fiber) | See 01/T02 and 01/T06 | See 01/T02 and 01/T06 |
| 01/T10[7/] ASTM C687 | $B_3$ | Thermal resistance (Rec. Practice) Loose-fill (fibrous) | See 01/T01, 01/T04 and 01/T08 | See 01/T01, 01/T04 and 01/T08 |
| 01/V02 ASTM D591 | $B_1$ | Starch in paper Qualitative test | non-quantitative test | |
| 01/V03 ASTM D2020 | $B_2$ | Mildew (fungus) resistance Paper and paperboard | non-quantitative test | |
| 01/V04 ASTM E96 | $B_2$ | Water vapor transmission Thin sheets Procedure A | R = 19% A = 25% | SRM 707 |
| 01/V05 HH-I-515 (para. 4.8.6 in D version) | $B_2$ | Fungus; Cellulosic fiber (loose-fill) | non-quantitative test | |
| 01/V06 HH-I-515 (para. 4.8.9 in D version) | $B_1$ | Starch, Cellulosic fiber (loose-fill) | non-quantitative test | |

Footnotes:

1/ The letter B followed by a numerical subscript 1, 2 or 3 indicates the complexity of the test method for examination purposes. Subscript 1 indicates relatively simple test methods, subscript 2 indicates moderate test methods and subscript 3 indicates complex test methods.

2/ SRM - Standard Reference Materials may be obtained from the National Bureau of Standards. Ordering information may be obtained from the Office of Standard Reference Materials, B311 Chemistry Bldg., National Bureau of Standards, Washington, D.C. 20234. (Telephone: (301) 921-2045)

3/ CTS CRP - Collaborative Reference Program for Thermal Insulation co-sponsored by the Collaborative Testing Services, Inc. and NBS. Information may be obtained from NBS Collaborative Reference Programs, A05 Technology Bldg. National Bureau of Standards, Washington, D.C. 20234. (Telephone: (301) 921-2946)

4/ TMVS - Testing Machine Verification Service is obtainable from a number of sources. Specify verification to ASTM Standard E4. Most manufacturers of testing machines can provide information on sources of verification service.

5/ Eligible for accreditation only if accredited for 01/S03.

6/ TAPPI CRP - Collaborative Reference Program co-sponsored by the Technical Association of the Pulp and Paper Industry and NBS. Information may be obtained from NBS Collaborative Reference Programs, A05 Technology Bldg., National Bureau of Standards, Washington, D.C. 20234. (Telephone: (301) 921-2946)

7/ Eligible for accreditation only if laboratory is accredited for C177 C236 or C518 for same class of materials.

TABLE 2

| NVLAP Test Method Code | Proficiency Sample Designation | Test Frequency Times per year | Comment |
|---|---|---|---|
| 01/D04 | P.S. 01/01 | 2 | accreditation for one or more of D04, D05, D07 requires proficiency in only one P.S. 01/01 test |
| 01/D05 | P.S. 01/01 | 2 | accreditation for one or more of D04, D05, D07 requires proficiency in only one P.S. 01/01 test |
| 01/D07 | P.S. 01/01 | 2 | accreditation for one or more of D04, D05, D07 requires proficiency in only one P.S. 01/01 test |
| 01/D10 | P.S. 01/02 | 2 | |
| 01/D23 | P.S. 01/03 | 2 | |
| 01/D24 | P.S. 01/04 | 2 | a single proficiency test is needed for either D24 or D25 |
| 01/D25 | P.S. 01/04 | 2 | a single proficiency test is needed for either D24 or D25 |
| 01/D26 | P.S. 01/05 | 2 | |
| 01/F02 | P.S. 01/06 | 2 | |
| 01/F03 | P.S. 01/07 | 2 | |
| 01/F04 | P.S. 01/08 | 2 | |
| 01/F06 | P.S. 01/06 | 2 | |
| 01/F07 | P.S. 01/06 | 2 | |
| 01/F08 | P.S. 01/06 | 2 | |
| 01/S01 | P.S. 01/07 | 2 | |
| 01/S02 | P.S. 01/07 | 2 | |
| 01/S03 | | | Both S01 and S02 proficiency tests are required for accreditation of any one or all S03, S04, S05, S06, S07 S08 |
| 01/S04 | | | |
| 01/S05 | | | |
| 01/S06 | | | |
| 01/S07 | | | |
| 01/S08 | | | |

| NVLAP Test Method Code | Proficiency Sample Designation | Test Frequency Times per year | Comment |
|---|---|---|---|
| 01/S10 | P.S. 01/08 | 6 | |
| 01/S11 | | | Both S01 and S02 proficiency tests are required for accreditation of S11 |
| 01/T01 | P.S. 01/09 | 2 | loose-fill and batt proficiency sample |
| 01/T02 | P.S. 01/10 | 2 | batt proficiency sample |
| 01/T03 | P.S. 01/11 | 2 | board and batt proficiency sample |
| 01/T04 1/ | P.S. 01/12 | | not required if in T03 or T07 test |
| 01/T05 | P.S. 01/13 | 2 | |
| 01/T06 | P.S. 01/10 | 2 | not required if in T02 test |
| 01/T07 | P.S. 10/11 | 2 | not required if in T03 test |
| 01/T08. | P.S. 01/09 | 2 | not required if in T01 test |

Footnote:

1/ Laboratories seeking accreditation for 01/T04 while not also seeking accreditation for 01/T03 or 01/T07 will be required to perform proficienty tests using the guarded hot box during on-site laboratory inspection visits.

APPENDIX 2
EXAMPLE PERSONNEL REQUIREMENTS 1/

| | EDUCATION | | EXPERIENCE | NATURE OF EMPLOYMENT (full or part time) | AFFILIATIONS |
|---|---|---|---|---|---|
| GENERAL MANAGEMENT | This individual, or group of individuals, may or may not be involved at the technical level They could be full time or part time employees of the firm In either case, they should become familiar with the broad technical aspects of the business, so as to make policy decisions consistent with quality testing. | | | | |
| TECHNICAL DIRECTOR | Minimum of a B S, degree or demonstrated capability in applicable field | Shall possess applicable professional license or certificates in one or more fields directed | Minimum of 5 years in one or more fields directed Must demonstrate capability in applicable field | Full time employee of the Laboratory | Holds affiliations with the technical and professional societies pertinent to fields |
| TECHNICAL SUPERVISOR | B S Degree or 5 years experience Both relevant to the technology supervised | Shall possess applicable licenses or certificates in one or more fields directed | 1 year with degree full time or 5 years w/o under qualified technical director in field supervised | Full time | Holds affiliations with the technical and professional societies pertinent to fields |
| ENGINEERING OR SCIENTIFIC STAFF | B S. degree, or equivalent pertinent to field of work | Working towards or has achieved any applicable license or certificate | On job training by supervisor or predecessor | Full or part time | Holds affiliations with the technical and professional societies pertinent to fields |
| TECHNICAL STAFF | High School graduate or equivalent | Shall strive for any applicable certificates in their field. | Sufficient "on-the-job" training and/or trade school Competence must be demonstrated | Part or Full Time | |
| CONSULTANT | An individual, who by academic training, work experience, or both brings the Laboratory technical skills and expertise equivalent to those of a Technical Supervisor on a part time basis | | | | |
| SUPPORT STAFF | Sufficient "on-the-job" training by a supervisor or predecessor so that job is performed properly | | | | |

1/ This Appendix is adopted from the chart, "Recommended Personnel Basic Requirements" from the American Council of Independent Laboratories (ACIL) publication, "Quality Control, Requirements for a Testing and Inspection Laboratory, Manual of Practice - 1976," The qualifications given in this Appendix should not be interpreted as minimum or typical requirements for personnel in the NVLAP program

## APPENDIX 3

### INDEX OF TEST METHODS AND RECOMMENDED PRACTICES APPLICABLE TO THE NVLAP FOR THERMAL INSULATION MATERIALS

| ASTM designation. | Title |
|---|---|
| C177 | Steady-state thermal transmission properties by means of the guarded hot plate. |
| C518 | Steady-state thermal transmission properties by means of the heat flow meter |
| C335 | Thermal conducitivity of pipe insulation. |
| C236 | Thermal conductance and transmittance of built-up sections by means of the guarded hot box. |
| C653 | Recommended practice for determination of thermal resistance of low-density mineral fiber blanket-type building insulation. |
| C687 | Recommended practice for determination of thermal resistance of low-density fibrous loose fill-type building insulation. |
| C167 | Tests for thickness and density of blanket- or batt-type thermal insulating materials. |
| C302 | Test for density of preformed pipe-covering-type thermal insulation. |
| C303 | Test for density of preformed block-type thermal insulation. |
| C519 | Test for density of fibrous loose fill building insulations. |
| C520 | Test for density of granular loose fill insulations. |
| D1622 | Test for apparent density of rigid cellular plastics. |
| C136 | Sieve or screen analysis of fine and coarse aggregates. |
| C356 | Test for linear shrinkage of preformed high-temperature thermal insulation subjected to soaking heat. |
| C355 | Tests for water vapor transmission of thick materials. |
| D2842 | Test for water absorption of rigid cellular plastics. |
| D2126 | Test for response of rigid cellular plastics to thermal and humid aging. |
| D591 | Test for starch in paper |
| C272 | Test for water absorption of core materials for structural sandwich constructions. |
| D756 | Tests for resistance of plastics to accelerated service conditions. |
| C411 | Test for hot-surface performance of high-temperature thermal insulation. |
| C165 | Test for compressive strength or preformed block-type thermal insulation. |
| C203 | Test for breaking load and calculated flexural strength of preformed block-type thermal insulation. |

| | |
|---|---|
| C446 ..... | Test for breaking load and calculated modulus of rupture of preformed insulation for pipes. |
| D781 .. .. | Tests for puncture and stiffness of paperboard, corrugated and solid fiberboard. |
| D828 . . . | Test for tensile breaking strength of paper and paperboard. |
| C209 . . ... . | Testing insulating board (cellulosic fiber), structural and decorative. |
| C273 . . | Shear test in flatwise plane of flat sandwich constructions or sandwich cores. |
| E84 . ... .. | Test for surface burning characterisitics of building materials. |
| E136 ... . .. . | Test for noncombustibility of elementary materials. |
| E96 .. ..... .. | Test for water vapor transmission of materials in sheet form. |
| D2020 . . . . | Tests for mildew (fungus) resistance of paper and paperboard. |
| D777 . .. . | Test for flammmability of treated paper and paperboard. |
| C739 . .... | Cellulosic fiber (wood-base) loose-fill thermal insulation. Test for flame resistance, corrosion, and moisture absorption. |

Federal designation.

| | |
|---|---|
| HH-I-515 | Insulation thermal (loose fill for pneumatic or poured application) cellulosic or wood fiber Test for settled density, smoldering combustion, corrosion, moisture absorption, starch, and fungus. |

[FR Doc. 79-1706 Filed 1-17-79; 8:45 am]

[3510-13-M]

## NATIONAL VOLUNTARY LABORATORY ACCREDITATION PROGRAM

### Fees and Charges To Accredit Laboratories Which Test Thermal Insulation Materials

In a separate notice appearing in this issue of the FEDERAL REGISTER, the Department of Commerce announced the issuance of general and specific criteria for accrediting testing laboratories that test thermal insulation materials. Pursuant to paragraph (a) of § 7.10 of the Procedures for a National Voluntary Laboratory Accreditation Program (15 CFR Part 7) notice is hereby given of the fees and charges which the Secretary of Commerce (Secretary) has established for this laboratory accreditation program (LAP).

*Basis for Fees:* Fees and charges have been established on the basis that each laboratory in the program will be evaluated annually for the first two years of enrollment and once every two years thereafter. This evaluation schedule has been adopted as a compromise between the two year schedule originally proposed for the program on September 29, 1978 (43 FR 45298), and the recommendation of the National Laboratory Accreditation Criteria Committee which urged that evaluations be conducted every year. The fees cited in this notice have been increased from those originally proposed in order to reflect the more frequent inspections during the first two years.

The fees and charges cover the cost of examining, accrediting, and auditing laboratories that test thermal insulation materials. The fees also include a contingency factor to cover the cost associated with conducting unannounced re-inspection visits for up to one-third of the participating laboratories. The Department of Commerce's administrative cost associated with developing this LAP has not been included.

It is unlikely that any one laboratory will seek accreditation for all of the various test methods which are included in this LAP Therefore, the fees have been established on the basis of allowing total charges to vary with the number and complexity of the individual test methods selected by the laboratory seeking accreditation.

*Fees and Charges:* The fee to any laboratory will be determined by the following equation:

$$F=A+B_1(N_1)+B_2(N_2)+B_3(N_3)+$$

where F is the fee in dollars. A is a fixed charge in dollars to cover administrative and some basic examination costs associated with the program operation. B is a variable charge in dollars which covers the examination costs for evaluating a laboratory's capability to meet the specific criteria for each test method. N is the number of test methods for which the laboratory requests accreditation.

Subscripts 1, 2, and 3 represent the three levels of complexity into which the test methods fall when considered for examination purposes. The fee per method for the simpler test methods is represented as $B_1$. $N_1$ is the number of such test methods. $B_2$ is the fee per method for test methods of intermediate complexity and $N_2$ is the number of such test methods. The most complex test methods and the number of each are represented by $B_3$ and $N_3$ respectively. Values for each coefficient in the equation are: A=\$750, $B_1$=\$75, $B_2$=\$125, and $B_3$=\$175. The level of complexity for each test method is shown by the letter B with subscripts 1, 2, and 3 in the column, labeled "Complexity" in Table 1 of Appendix 1 to the FEDERAL REGISTER announcement referenced in the first sentence of this notice.

*Proficiency Sample Fees:* In addition to the basic inspection and evaluation charges referenced above, there will be a fee associated with proficiency sample testing where such tests are required. Table 2 in Appendix 1 referred to above identifies those test methods for which proficiency sample tests are currently required in this LAP. Proficiency sample fees pay for distribution of samples (where appropriate), the collection and analysis of the data, and the reporting of results. The fee for proficiency sample testing associated with each of the test methods is nominally \$80 for each test performed. In most instances where proficiency testing is prescribed for test methods in the LAP it is a requirement of the program that such testing be performed twice yearly. Thus, for each test method identified in Table 2 of Appendix 1 for which a laboratory desires accreditation, an additional fee of \$160 is required. Explicit instructions regarding proficiency testing will be supplied with examination materials.

As explained under issue 4 in the FEDERAL REGISTER announcement referenced in the first sentence of this notice, the proficiency testing requirement for this LAP will be fulfilled by enrollment in a CTS CRP for the tests requiring NVLAP proficiency testing and the successful attainment of precision and accuracy of NVLAP

*Example Calculation:* In order to clearly illustrate the annual cost for accreditation, the following example is provided. If a laboratory was to choose to be accredited for four simple test methods ($B_1$), three intermediate test methods ($B_2$), and two complex test methods ($B_3$), the fee equation would become:

$$F=\$750+\$75(4)+\$125(3)+\$175(2)=\$1,775$$

Added to this would be the cost of proficiency testing. If proficiency sample tests were required twice annually for two of these nine test methods at a cost of \$80 each, the total cost of proficiency sample testing would be \$320. The total annual accreditation cost for the testing laboratory in this example would be \$2,095.

*Inquiries:* Any inquiries may be addressed to Dr. Howard I. Forman, Deputy Assistant Secretary for Product Standards, Room 3876, U.S. Department of Commerce, Washington, DC 20230, 202-377-3221.

Dated: January 12, 1979.

JORDAN J. BARUCH,
*Assistant Secretary for Science and Technology.*

[FR Doc. 79-1707 Filed 1-17-79; 8:45 am]

federal register

THURSDAY, JANUARY 18, 1979
PART IV

# DEPARTMENT OF HOUSING AND URBAN DEVELOPMENT

## Office of the Assistant Secretary for Housing—Federal Housing Commissioner

■

# SECTION 8 HOUSING ASSISTANCE PAYMENTS PROGRAM

## Contract Rent Annual Adjustment Factors

[4210-01-M]

## Title 24—Housing and Urban Development

## CHAPTER VIII—LOW INCOME HOUSING, DEPARTMENT OF HOUSING AND URBAN DEVELOPMENT

[Docket No. R-79-613]

## PART 888—SECTION 8 HOUSING ASSISTANCE PAYMENTS PROGRAM—FAIR MARKET RENTS AND CONTRACT RENT ANNUAL ADJUSTMENT FACTORS

### Publication of Subpart B—Contract Rent Annual Adjustment Factors

AGENCY: Office of the Assistant Secretary for Housing-Federal Housing Commissioner, Department of Housing and Urban Development (HUD).

ACTION: Interim rule.

SUMMARY: HUD is publishing for effect amendments to Subpart B—Contract Rent Annual Adjustment Factors to require that the adjusted monthly amount of the Contract Rent of a dwelling unit shall be determined by multiplying the unit's *pro rata* share of the operating expense by the applicable Annual Adjustment Factors. The adjustment factors will not apply to depreciation, interest or amortization. The factors are applicable to Section 8 New Construction, Substantial Rehabilitation, Housing Finance and Development Agencies, New Construction Set-Aside for Section 515 Rural Rental Housing Projects, and Additional Assistance Program for Projects with HUD-insured and HUD-held mortgages.

EFFECTIVE DATE: November 8, 1978.

COMMENTS DUE: February 20, 1979.

ADDRESS: Written comments should be submitted to the Rules Docket Clerk, Office of the General Counsel, Room 5218, Department of Housing and Urban Development, 451 Seventh Street SW., Washington, D.C. 20410. Comments should be identified by the above title, docket number and date of publication. A copy of each such communications will be available for public inspection during regular business hours at the above address.

FOR FURTHER INFORMATION CONTACT:

Fred W. Pfaender, Acting Director, Office of Multifamily Housing Management and Occupancy, Department of Housing and Urban Development, Room 6156, 451 Seventh Street SW., Washington, D.C. 20410, (202) 755-5677. This is not a toll-free number.

SUPPLEMENTARY INFORMATION: The Revised Annual Adjustment Factors are being published for effect on November 8, 1978 to supersede the factors which were made effective as of November 8, 1977.

RATIONALE FOR ADJUSTING EXPENSES

The basic purpose of the interim amendment is to prevent unnecessary escalation of Section 8 rents beyond what is needed to meet increases in operating expenses. The current Subpart B specifies that the contract rent Annual Adjustment Factors are applied to the full amount of the latest adjusted Contract Rent. The Department is concerned that this method of adjusting rents has the effect of providing greater rent increases than are needed to compensate for increases in operating expenses. This overcompensation is due to two basic facts: (1) The portion of the owner's rent which is needed to pay operating expenses generally amounts to much less than 50% of the total rent while the portion needed for debt service represents more than half of the total rent, and (2) although operating expenses are subject to annual escalation, in response to market conditions, the annual debt service payment for a section 8 project remains at a fixed level throughout the 30 or 40 years of the financing period. Assuming that there has been 6 or 7 percent escalation in materials and labor resulting in an Adjustment Factor of commensurate amount, the owner under the present system may be overcompensated by being permitted to apply the 6 or 7 percent increase to the large portion of the rent which is available for payment of the non-escalating debt service.

To discourage increases in operating costs which may be induced by applying the Adjustment Factor to operating expense, an overall control is provided by specifying that the amount of Operating Expense on which the adjustment may be based shall not exceed 45 percent of the total revenue of the project as determined by an audited financial statement. Since Operating Expense is generally less than 45 percent, this allows some leeway for individual differences among projects.

If there is any situation in which a project-owner finds that this adjustment is insufficient, he/she could request relief under § 888.204 which applies "If the application of the Automatic Annual Adjustment Factors results in rents that are substantially lower than rents charged for comparable units not receiving assistance under the U.S. Housing Act of 1937, in the area for which the factor was published or a portion thereof * * *".

A Finding of Inapplicability respecting the National Environmental Policy Act of 1969 has been made in accordance with HUD procedures. A copy of the Finding of Inapplicability is available for public inspection during regular business hours at the Office of the Rules Docket Clerk.

Accordingly, the Department Title 24 CFR Part 888, Subpart B, is amended as follows:

1. Amend § 888.203(b) to read as follows:

**§ 888.203 Use of contract rent annual adjustment factors.**

* * * * *

The adjusted monthly amount of the Contract Rent of a dwelling unit shall be determined by (1) multiplying the unit's *pro rata* share of the Operating Expense by the applicable Annual Adjustment Factor (see paragraph (a) of this section) and (2) by adding the difference between the calculation under subparagraph (1) of this paragraph and the *pro rata* share, rounded to the next higher whole dollar amount to the Contract Rent in effect on the anniversary date of the Contract. For purposes of this paragraph, Operating Expenses (i) shall include administrative expense, management fee, trustee fee, insurance, property tax, utilities, maintenance and repairs, and payments to a maintenance or replacements reserve, (ii) shall not include depreciation, interest or amortization, and (iii) shall not be more than 45 percent of the total operating revenue, all of the foregoing to be supported by an audited financial statement submitted to HUD.

2. Amend the first sentence of § 888.204(a) to read as follows:

**§ 888.204 Revision to the annual adjustment factors.**

* * * * *

(a) If the application of the Annual Adjustment Factors results in rents that are substantially lower than rents charged for comparable units not receiving assistance under the U.S. Housing Act of 1937, in the area for which the factor was published or a portion thereof, and it is shown to HUD that the costs of operating comparable rental housing have increased at a substantially greater rate than is compensated for by application of the Adjustment Factors, the HUD Field Office will consider establishing separate or revised Annual Adjustment Factors for that particular area.* * *

(Sec. 7(d), Department of HUD Act (42 U.S.C. 3535(d)); sec. 5(b), U.S. Housing Act of 1937 (42 U.S.C. 1437c(b)); sec. 8, U.S. Housing Act of 1937 (42 U.S.C. 1437(f).)

In accordance with Section 7(o)(4) of the Department of HUD Act, Section 324 of the Housing and Community Amendments of 1978, Pub. L. 95-557, 92 Stat. 2080, this rule has been granted waiver of Congressional review requirements in order to permit it to take effect on the date indicated.

Issued at Washington, D.C., January 9, 1979.

LAWRENCE B. SIMONS,
*Assistant Secretary for Housing, Federal Housing Commissioner.*

[FR Doc. 79-1548 Filed 1-17-79; 8:45 am]

federal register

THURSDAY, JANUARY 18, 1979
PART V

# DEPARTMENT OF HOUSING AND URBAN DEVELOPMENT

## Office of the Assistant Secretary for Housing—Federal Housing Commissioner

■

# SECTION 8 HOUSING ASSISTANCE PAYMENTS PROGRAM

## Contract Rent Annual Adjustment Factors

[4210-01-M]

## Title 24—Housing and Urban Development

## CHAPTER VIII—LOW INCOME HOUSING, DEPARTMENT OF HOUSING AND URBAN DEVELOPMENT

[Docket No. R-79-614]

## PART 888—SECTION 8 HOUSING ASSISTANCE PAYMENTS PROGRAM—FAIR MARKET RENTS AND CONTRACT RENT ANNUAL ADJUSTMENT FACTORS

### Publication of Subpart B—Contract Rent Annual Adjustment Factors

AGENCY: Office of the Assistant Secretary for Housing-Federal Housing Commissioner, Department of Housing and Urban Development (HUD).

ACTION: Final rule.

SUMMARY: HUD is publishing for effect amendments to Subpart B—Contract Rent Annual Adjustment Factors to require that the adjusted monthly amount of the Contract Rent of a dwelling unit shall be determined by multiplying the unit's *pro rata* share of the operating expense by the applicable Annual Adjustment Factors. The Adjustment Factors will not apply to depreciation, interest or amortization.

EFFECTIVE DATE: November 8, 1978.

ADDRESS: Rules Docket Clerk, Office of the General Counsel, Room 5218, Department of Housing and Urban Development, 451 Seventh Street, SW., Washington, D.C. 20410.

FOR FURTHER INFORMATION CONTACT:

Fred W. Pfaender, Acting Director, Office of Multifamily Housing Management and Occupancy, Department of Housing and Urban Development, Washington, D.C. 20410, (202) 755-5677: (This is not a toll free number.)

SUPPLEMENTARY INFORMATION: The revised factors supersede those published for effect at 42 FR 60508 on November 25, 1977, which were made effective as of November 8, 1977. Different adjustment factor schedules are provided for 23 Standard Metropolitan Statistical Areas (SMSAs) and for the four Census Regions on the basis of changes in the Consumer Price Index (CPI) for rent and utilities. A Finding of Inapplicability respecting the National Environmental Policy Act of 1969 has been made in accordance with HUD procedures. A copy of the Finding of Inapplicability is available for public inspection during regular business hours at the Office of the Rules Docket Clerk.

Accordingly, Title 24, Part 888, is amended by publishing updated Schedule C factors for effect as set forth below.

(Sec. 7(d), Department of HUD Act (42 U.S.C. 3535(d)); sec. 5(b), U.S. Housing Act of 1937 (42 U.S.C. 1437c(b)); sec. 8, U.S. Housing Act of 1937 (42 U.S.C. 1437f))

In accordance with Section 7(o)(4) of the Department of HUD Act, Section 324 of the Housing and Community Amendments of 1978, Pub. L. 95-557, 92 Stat 2080, this rule has been granted waiver of Congressional review requirements in order to permit it to take effect on the date indicated.

Issued at Washington, D.C., January 9, 1979.

LAWRENCE B. SIMONS,
*Assistant Secretary for Housing, Federal Housing Commissioner.*

[4210-01-C]

SCHEDULE C [redacted] ANNUAL ADJUSTMENT FACTOR FOR UPDATING SECTION 8 CONTRACT RENTS FOR NEW CONSTRUCTION AND SUBSTANTIAL REHABILITATION (INCLUDING THE HOUSING FINANCE & DEVELOPMENT AGENCIES PROGRAM)

NORTHEAST CENSUS REGION

| MONTHLY GROSS RENT | 0 BEDROOMS | 1 BEDROOM | 2 BEDROOMS | 3 BEDROOMS | 4+BEDROOMS |
|---|---|---|---|---|---|
| UNDER $100 | 1 051 | 1 049 | 1 047 | 1 046 | 1 044 |
| 100 - 124 | 1 051 | 1 050 | 1 049 | 1 047 | 1 046 |
| 125 - 149 | 1 052 | 1 051 | 1 050 | 1 048 | 1 047 |
| 150 - 174 | 1 052 | 1 051 | 1 050 | 1 049 | 1 048 |
| 175 - 199 | 1 052 | 1 051 | 1 051 | 1 050 | 1 049 |
| 200 - 224 | 1 052 | 1 052 | 1 051 | 1 050 | 1 049 |
| 225 - 249 | 1 052 | 1 052 | 1 051 | 1 050 | 1 050 |
| 250 - 274 | 1 052 | 1 052 | 1 051 | 1 051 | 1 050 |
| 275 - 299 | 1 053 | 1 052 | 1 052 | 1 051 | 1 050 |
| 300 - 324 | 1 053 | 1 052 | 1 052 | 1 051 | 1 051 |
| 325 - 349 | 1 053 | 1 052 | 1 052 | 1 051 | 1 051 |
| 350 - 374 | 1 053 | 1 052 | 1 052 | 1 051 | 1 051 |
| 375 - 399 | 1 053 | 1 052 | 1 052 | 1 052 | 1 051 |
| 400 - 424 | 1 053 | 1 053 | 1 052 | 1 052 | 1 051 |
| 425 - 449 | 1 053 | 1 053 | 1 052 | 1 052 | 1 051 |
| 450 - 474 | 1 053 | 1 053 | 1 052 | 1 052 | 1 052 |
| 475 - 499 | 1 053 | 1 053 | 1 052 | 1 052 | 1 052 |
| 500 OR MORE | 1 053 | 1 053 | 1 052 | 1 052 | 1 052 |

ANNUAL ADJUSTMENT FACTOR FOR CONTRACT RENT (EXCLUDING UTILITIES) IS 1 053

NOTE: THE NORTHEAST CENSUS REGION INCLUDES THE FOLLOWING STATES:
CONNECTICUT
MAINE
MASS
NEW HAMP
NEW JERSEY
NEW YORK
PENNSYLVANIA
PUERTO RICO
RHODE ISLAND
VERMONT
VIRGIN IS

SCHEDULE C [redacted] ANNUAL ADJUSTMENT FACTOR FOR UPDATING SECTION 8 CONTRACT RENTS FOR NEW CONSTRUCTION AND SUBSTANTIAL REHABILITATION (INCLUDING THE HOUSING FINANCE & DEVELOPMENT AGENCIES PROGRAM)

NORTHCENTRAL CENSUS REGION

| MONTHLY GROSS RENT | 0 BEDROOMS | 1 BEDROOM | 2 BEDROOMS | 3 BEDROOMS | 4+BEDROOMS |
|---|---|---|---|---|---|
| UNDER $100 | 1 073 | 1 075 | 1 079 | 1 083 | 1 087 |
| 100 - 124 | 1 071 | 1 073 | 1 076 | 1 079 | 1 082 |
| 125 - 149 | 1 070 | 1 072 | 1 075 | 1 077 | 1 079 |
| 150 - 174 | 1 070 | 1 071 | 1 073 | 1 076 | 1 077 |
| 175 - 199 | 1 069 | 1 071 | 1 072 | 1 074 | 1 076 |
| 200 - 224 | 1 069 | 1 070 | 1 072 | 1 073 | 1 075 |
| 225 - 249 | 1 069 | 1 070 | 1 071 | 1 073 | 1 074 |
| 250 - 274 | 1 069 | 1 069 | 1 071 | 1 072 | 1 073 |
| 275 - 299 | 1 068 | 1 069 | 1 070 | 1 072 | 1 073 |
| 300 - 324 | 1 068 | 1 069 | 1 070 | 1 071 | 1 072 |
| 325 - 349 | 1 068 | 1 069 | 1 070 | 1 071 | 1 072 |
| 350 - 374 | 1 068 | 1 069 | 1 070 | 1 071 | 1 071 |
| 375 - 399 | 1 068 | 1 069 | 1 069 | 1 070 | 1 071 |
| 400 - 424 | 1 068 | 1 068 | 1 069 | 1 070 | 1 071 |
| 425 - 449 | 1 068 | 1 068 | 1 069 | 1 070 | 1 071 |
| 450 - 474 | 1 068 | 1 068 | 1 069 | 1 070 | 1 070 |
| 475 - 499 | 1 068 | 1 068 | 1 069 | 1 070 | 1 070 |
| 500 OR MORE | 1 068 | 1 068 | 1 069 | 1 069 | 1 070 |

ANNUAL ADJUSTMENT FACTOR FOR CONTRACT RENT (EXCLUDING UTILITIES) IS 1 067

NOTE: THE NORTHCENTRAL CENSUS REGION INCLUDES THE FOLLOWING STATES:
ILLINOIS
INDIANA
IOWA
KANSAS
MICHIGAN
MINNESOTA
MISSOURI
NEBRASKA
NORTH DAKOTA
OHIO
SOUTH DAKOTA
WISCONSIN

SCHEDULE C [redacted] ANNUAL ADJUSTMENT FACTOR FOR UPDATING SECTION 8 CONTRACT RENTS FOR NEW CONSTRUCTION AND SUBSTANTIAL REHABILITATION (INCLUDING THE HOUSING FINANCE & DEVELOPMENT AGENCIES PROGRAM)

SOUTH CENSUS REGION

| MONTHLY GROSS RENT | 0 BEDROOMS | 1 BEDROOM | 2 BEDROOMS | 3 BEDROOMS | 4+BEDROOMS |
|---|---|---|---|---|---|
| UNDER $100 | 1 074 | 1 075 | 1 078 | 1 081 | 1 083 |
| 100 - 124 | 1 073 | 1 074 | 1 076 | 1 078 | 1 080 |
| 125 - 149 | 1 072 | 1 073 | 1 075 | 1 077 | 1 078 |
| 150 - 174 | 1 072 | 1 073 | 1 074 | 1 076 | 1 077 |
| 175 - 199 | 1 071 | 1 072 | 1 073 | 1 075 | 1 076 |
| 200 - 224 | 1 071 | 1 072 | 1 073 | 1 074 | 1 075 |
| 225 - 249 | 1 071 | 1 072 | 1 073 | 1 074 | 1 075 |
| 250 - 274 | 1 071 | 1 071 | 1 072 | 1 073 | 1 074 |
| 275 - 299 | 1 071 | 1 071 | 1 072 | 1 073 | 1 074 |
| 300 - 324 | 1 071 | 1 071 | 1 072 | 1 073 | 1 073 |
| 325 - 349 | 1 071 | 1 071 | 1 072 | 1 072 | 1 073 |
| 350 - 374 | 1 071 | 1 071 | 1 072 | 1 072 | 1 073 |
| 375 - 399 | 1 071 | 1 071 | 1 071 | 1 072 | 1 073 |
| 400 - 424 | 1 070 | 1 071 | 1 071 | 1 072 | 1 072 |
| 425 - 449 | 1 070 | 1 071 | 1 071 | 1 072 | 1 072 |
| 450 - 474 | 1 070 | 1 071 | 1 071 | 1 072 | 1 072 |
| 475 - 499 | 1 070 | 1 071 | 1 071 | 1 072 | 1 072 |
| 500 OR MORE | 1 070 | 1 071 | 1 071 | 1 071 | 1 072 |

ANNUAL ADJUSTMENT FACTOR FOR CONTRACT RENT (EXCLUDING UTILITIES) IS 1 070

NOTE: THE SOUTH CENSUS REGION INCLUDES THE FOLLOWING STATES:

ALABAMA
ARKANSAS
DELAWARE
D.C
FLORIDA
GEORGIA
KENTUCKY
LOUISIANA
MARYLAND
MISSISSIPPI
N CAROLINA
OKLAHOMA
S CAROLINA
TENNESSEE
TEXAS
VIRGINIA
W VIRGINIA

SCHEDULE C [redacted] ANNUAL ADJUSTMENT FACTOR FOR UPDATING SECTION 8 CONTRACT RENTS FOR NEW CONSTRUCTION AND SUBSTANTIAL REHABILITATION (INCLUDING THE HOUSING FINANCE & DEVELOPMENT AGENCIES PROGRAM)

WEST CENSUS REGION

| MONTHLY GROSS RENT | 0 BEDROOMS | 1 BEDROOM | 2 BEDROOMS | 3 BEDROOMS | 4+BEDROOMS |
|---|---|---|---|---|---|
| UNDER $100 | 1 087 | 1 088 | 1 090 | 1 091 | 1 092 |
| 100 - 124 | 1 087 | 1 088 | 1 089 | 1 090 | 1 091 |
| 125 - 149 | 1 087 | 1 087 | 1 088 | 1 089 | 1 090 |
| 150 - 174 | 1 087 | 1 087 | 1 088 | 1 088 | 1 089 |
| 175 - 199 | 1 086 | 1 087 | 1 087 | 1 088 | 1 089 |
| 200 - 224 | 1 086 | 1 087 | 1 087 | 1 088 | 1 088 |
| 225 - 249 | 1 086 | 1 087 | 1 087 | 1 088 | 1 088 |
| 250 - 274 | 1 086 | 1 086 | 1 087 | 1 087 | 1 088 |
| 275 - 299 | 1 086 | 1 086 | 1 087 | 1 087 | 1 088 |
| 300 - 324 | 1 086 | 1 086 | 1 087 | 1 087 | 1 087 |
| 325 - 349 | 1 086 | 1 086 | 1 087 | 1 087 | 1 087 |
| 350 - 374 | 1 086 | 1 086 | 1 086 | 1 087 | 1 087 |
| 375 - 399 | 1 086 | 1 086 | 1 086 | 1 087 | 1 087 |
| 400 - 424 | 1 086 | 1 086 | 1 086 | 1 087 | 1 087 |
| 425 - 449 | 1 086 | 1 086 | 1 086 | 1 087 | 1 087 |
| 450 - 474 | 1 086 | 1 086 | 1 086 | 1 087 | 1 087 |
| 475 - 499 | 1 086 | 1 086 | 1 086 | 1 086 | 1 087 |
| 500 OR MORE | 1 086 | 1 086 | 1 086 | 1 086 | 1 087 |

ANNUAL ADJUSTMENT FACTOR FOR CONTRACT RENT (EXCLUDING UTILITIES) IS 1 086

NOTE: THE WEST CENSUS REGION INCLUDES THE FOLLOWING STATES:

ALASKA
ARIZONIA
CALIFORNIA
COLORADO
HAWAII
IDAHO
MONTANA
NEVADA
NEW MEXICO
OREGON
UTAH
WASHINGTON
WYOMING

SCHEDULE C [redacted] ANNUAL ADJUSTMENT FACTOR FOR UPDATING SECTION 8 CONTRACT RENTS FOR NEW CONSTRUCTION AND SUBSTANTIAL REHABILITATION (INCLUDING THE HOUSING FINANCE & DEVELOPMENT AGENCIES PROGRAM)

SMSA: ATLANTA, GA

| MONTHLY GROSS RENT | 0 BEDROOMS | 1 BEDROOM | 2 BEDROOMS | 3 BEDROOMS | 4+BEDROOMS |
|---|---|---|---|---|---|
| UNDER $100 | 1 061 | 1 064 | 1 071 | 1 077 | 1 082 |
| 100 - 124 | 1 058 | 1 061 | 1 066 | 1 071 | 1 075 |
| 125 - 149 | 1 057 | 1 060 | 1 064 | 1 068 | 1 071 |
| 150 - 174 | 1 056 | 1 058 | 1 062 | 1 065 | 1 068 |
| 175 - 199 | 1 056 | 1 057 | 1 060 | 1 063 | 1 066 |
| 200 - 224 | 1 055 | 1 057 | 1 059 | 1 062 | 1 064 |
| 225 - 249 | 1 055 | 1 056 | 1 058 | 1 061 | 1 063 |
| 250 - 274 | 1 054 | 1 056 | 1 058 | 1 060 | 1 062 |
| 275 - 299 | 1 054 | 1 055 | 1 057 | 1 059 | 1 061 |
| 300 - 324 | 1 054 | 1 055 | 1 057 | 1 058 | 1 060 |
| 325 - 349 | 1 054 | 1 055 | 1 056 | 1 058 | 1 059 |
| 350 - 374 | 1 053 | 1 054 | 1 056 | 1 057 | 1 059 |
| 375 - 399 | 1 053 | 1 054 | 1 056 | 1 057 | 1 058 |
| 400 - 424 | 1 053 | 1 054 | 1 055 | 1 057 | 1 058 |
| 425 - 449 | 1 053 | 1 054 | 1 055 | 1 056 | 1 057 |
| 450 - 474 | 1 053 | 1 054 | 1 055 | 1 056 | 1 057 |
| 475 - 499 | 1 053 | 1 054 | 1 055 | 1 056 | 1 057 |
| 500 OR MORE | 1 053 | 1 053 | 1 054 | 1 056 | 1 056 |

ANNUAL ADJUSTMENT FACTOR FOR CONTRACT RENT (EXCLUDING UTILITIES) IS 1 051

SCHEDULE C [redacted] ANNUAL ADJUSTMENT FACTOR FOR UPDATING SECTION 8 CONTRACT RENTS FOR NEW CONSTRUCTION AND SUBSTANTIAL REHABILITATION (INCLUDING THE HOUSING FINANCE & DEVELOPMENT AGENCIES PROGRAM)

SMSA: BALTIMORE, MD

| MONTHLY GROSS RENT | 0 BEDROOMS | 1 BEDROOM | 2 BEDROOMS | 3 BEDROOMS | 4+BEDROOMS |
|---|---|---|---|---|---|
| UNDER $100 | 1 083 | 1 090 | 1 102 | 1 114 | 1 124 |
| 100 - 124 | 1 079 | 1 084 | 1 094 | 1 103 | 1 111 |
| 125 - 149 | 1 076 | 1 081 | 1 088 | 1 096 | 1 102 |
| 150 - 174 | 1 074 | 1 078 | 1 085 | 1 091 | 1 097 |
| 175 - 199 | 1 073 | 1 077 | 1 082 | 1 088 | 1 092 |
| 200 - 224 | 1 072 | 1 075 | 1 080 | 1 085 | 1 089 |
| 225 - 249 | 1 071 | 1 074 | 1 079 | 1 083 | 1 087 |
| 250 - 274 | 1 071 | 1 073 | 1 077 | 1 081 | 1 085 |
| 275 - 299 | 1 070 | 1 073 | 1 076 | 1 080 | 1 083 |
| 300 - 324 | 1 070 | 1 072 | 1 075 | 1 079 | 1 081 |
| 325 - 349 | 1 070 | 1 071 | 1 075 | 1 078 | 1 080 |
| 350 - 374 | 1 069 | 1 071 | 1 074 | 1 077 | 1 079 |
| 375 - 399 | 1 069 | 1 071 | 1 073 | 1 076 | 1 078 |
| 400 - 424 | 1 069 | 1 070 | 1 073 | 1 075 | 1 077 |
| 425 - 449 | 1 069 | 1 070 | 1 072 | 1 075 | 1 077 |
| 450 - 474 | 1 068 | 1 070 | 1 072 | 1 074 | 1 076 |
| 475 - 499 | 1 068 | 1 069 | 1 072 | 1 074 | 1 076 |
| 500 OR MORE | 1 068 | 1 069 | 1 071 | 1 073 | 1 075 |

ANNUAL ADJUSTMENT FACTOR FOR CONTRACT RENT (EXCLUDING UTILITIES) IS 1 065

SCHEDULE C [redacted] ANNUAL ADJUSTMENT FACTOR FOR UPDATING SECTION 8 CONTRACT RENTS FOR NEW CONSTRUCTION AND SUBSTANTIAL REHABILITATION (INCLUDING THE HOUSING FINANCE & DEVELOPMENT AGENCIES PROGRAM)
SMSA: BOSTON MA

| MONTHLY GROSS RENT | 0 BEDROOMS | 1 BEDROOM | 2 BEDROOMS | 3 BEDROOMS | 4+BEDROOMS |
|---|---|---|---|---|---|
| UNDER $100 | 1 041 | 1 042 | 1 044 | 1 045 | 1 047 |
| 100 - 124 | 1 040 | 1 041 | 1 042 | 1 044 | 1 045 |
| 125 - 149 | 1 040 | 1 041 | 1 042 | 1 043 | 1 044 |
| 150 - 174 | 1 040 | 1 040 | 1 041 | 1 042 | 1 043 |
| 175 - 199 | 1 039 | 1 040 | 1 041 | 1 042 | 1 042 |
| 200 - 224 | 1 039 | 1 040 | 1 040 | 1 041 | 1 042 |
| 225 - 249 | 1 039 | 1 040 | 1 040 | 1 041 | 1 041 |
| 250 - 274 | 1 039 | 1 039 | 1 040 | 1 041 | 1 041 |
| 275 - 299 | 1 039 | 1 039 | 1 040 | 1 040 | 1 041 |
| 300 - 324 | 1 039 | 1 039 | 1 040 | 1 040 | 1 041 |
| 325 - 349 | 1 039 | 1 039 | 1 040 | 1 040 | 1 040 |
| 350 - 374 | 1 039 | 1 039 | 1 039 | 1 040 | 1 040 |
| 375 - 399 | 1 039 | 1 039 | 1 039 | 1 040 | 1 040 |
| 400 - 424 | 1 039 | 1 039 | 1 039 | 1 040 | 1 040 |
| 425 - 449 | 1 039 | 1 039 | 1 039 | 1 040 | 1 040 |
| 450 - 474 | 1 039 | 1 039 | 1 039 | 1 040 | 1 040 |
| 475 - 499 | 1 039 | 1 039 | 1 039 | 1 039 | 1 040 |
| 500 OR MORE | 1 039 | 1 039 | 1 039 | 1 039 | 1 040 |

ANNUAL ADJUSTMENT FACTOR FOR CONTRACT RENT (EXCLUDING UTILITIES) IS 1 038

SCHEDULE C [redacted] ANNUAL ADJUSTMENT FACTOR FOR UPDATING SECTION 8 CONTRACT RENTS FOR NEW CONSTRUCTION AND SUBSTANTIAL REHABILITATION (INCLUDING THE HOUSING FINANCE & DEVELOPMENT AGENCIES PROGRAM)
SMSA: BUFFALO NY

| MONTHLY GROSS RENT | 0 BEDROOMS | 1 BEDROOM | 2 BEDROOMS | 3 BEDROOMS | 4+BEDROOMS |
|---|---|---|---|---|---|
| UNDER $100 | 1 044 | 1 043 | 1 040 | 1 038 | 1 036 |
| 100 - 124 | 1 045 | 1 044 | 1 042 | 1 040 | 1 038 |
| 125 - 149 | 1 046 | 1 045 | 1 043 | 1 042 | 1 040 |
| 150 - 174 | 1 046 | 1 045 | 1 044 | 1 043 | 1 041 |
| 175 - 199 | 1 046 | 1 046 | 1 045 | 1 043 | 1 042 |
| 200 - 224 | 1 047 | 1 046 | 1 045 | 1 044 | 1 043 |
| 225 - 249 | 1 047 | 1 046 | 1 045 | 1 044 | 1 044 |
| 250 - 274 | 1 047 | 1 046 | 1 046 | 1 045 | 1 044 |
| 275 - 299 | 1 047 | 1 047 | 1 046 | 1 045 | 1 044 |
| 300 - 324 | 1 047 | 1 047 | 1 046 | 1 045 | 1 045 |
| 325 - 349 | 1 047 | 1 047 | 1 046 | 1 046 | 1 045 |
| 350 - 374 | 1 047 | 1 047 | 1 046 | 1 046 | 1 045 |
| 375 - 399 | 1 047 | 1 047 | 1 046 | 1 046 | 1 045 |
| 400 - 424 | 1 047 | 1 047 | 1 047 | 1 046 | 1 046 |
| 425 - 449 | 1 047 | 1 047 | 1 047 | 1 046 | 1 046 |
| 450 - 474 | 1 047 | 1 047 | 1 047 | 1 046 | 1 046 |
| 475 - 499 | 1 048 | 1 047 | 1 047 | 1 046 | 1 046 |
| 500 OR MORE | 1 048 | 1 047 | 1 047 | 1 046 | 1 046 |

ANNUAL ADJUSTMENT FACTOR FOR CONTRACT RENT (EXCLUDING UTILITIES) IS 1 048

SCHEDULE C [redacted] ANNUAL ADJUSTMENT FACTOR FOR UPDATING SECTION 8 CONTRACT RENTS FOR NEW CONSTRUCTION AND SUBSTANTIAL REHABILITATION (INCLUDING THE HOUSING FINANCE & DEVELOPMENT AGENCIES PROGRAM)
SMSA: CHICAGO, IL

| MONTHLY GROSS RENT | 0 BEDROOMS | 1 BEDROOM | 2 BEDROOMS | 3 BEDROOMS | 4+BEDROOMS |
|---|---|---|---|---|---|
| UNDER $100 | 1 063 | 1 061 | 1 059 | 1 057 | 1 054 |
| 100 - 124 | 1 064 | 1 063 | 1 061 | 1 059 | 1 057 |
| 125 - 149 | 1 064 | 1 063 | 1 062 | 1 060 | 1 059 |
| 150 - 174 | 1 065 | 1 064 | 1 063 | 1 061 | 1 060 |
| 175 - 199 | 1 065 | 1 064 | 1 063 | 1 062 | 1 061 |
| 200 - 224 | 1 065 | 1 064 | 1 063 | 1 062 | 1 062 |
| 225 - 249 | 1 065 | 1 065 | 1 064 | 1 063 | 1 062 |
| 250 - 274 | 1 065 | 1 065 | 1 064 | 1 063 | 1 063 |
| 275 - 299 | 1 066 | 1 065 | 1 064 | 1 064 | 1 063 |
| 300 - 324 | 1 066 | 1 065 | 1 064 | 1 064 | 1 063 |
| 325 - 349 | 1 066 | 1 065 | 1 065 | 1 064 | 1 063 |
| 350 - 374 | 1 066 | 1 065 | 1 065 | 1 064 | 1 064 |
| 375 - 399 | 1 066 | 1 065 | 1 065 | 1 064 | 1 064 |
| 400 - 424 | 1 066 | 1 066 | 1 065 | 1 064 | 1 064 |
| 425 - 449 | 1 066 | 1 066 | 1 065 | 1 065 | 1 064 |
| 450 - 474 | 1 066 | 1 066 | 1 065 | 1 065 | 1 064 |
| 475 - 499 | 1 066 | 1 066 | 1 065 | 1 065 | 1 064 |
| 500 OR MORE | 1 066 | 1 066 | 1 065 | 1 065 | 1 065 |

ANNUAL ADJUSTMENT FACTOR FOR CONTRACT RENT (EXCLUDING UTILITIES) IS 1 067

SCHEDULE C [redacted] ANNUAL ADJUSTMENT FACTOR FOR UPDATING SECTION 8 CONTRACT RENTS FOR NEW CONSTRUCTION AND SUBSTANTIAL REHABILITATION (INCLUDING THE HOUSING FINANCE & DEVELOPMENT AGENCIES PROGRAM)
SMSA: CINCINNATI, OH-KY-IN

| MONTHLY GROSS RENT | 0 BEDROOMS | 1 BEDROOM | 2 BEDROOMS | 3 BEDROOMS | 4+BEDROOMS |
|---|---|---|---|---|---|
| UNDER $100 | 1 096 | 1 101 | 1 109 | 1 117 | 1 124 |
| 100 - 124 | 1 093 | 1 097 | 1 104 | 1 110 | 1 115 |
| 125 - 149 | 1 092 | 1 095 | 1 100 | 1 105 | 1 110 |
| 150 - 174 | 1 091 | 1 093 | 1 098 | 1 102 | 1 106 |
| 175 - 199 | 1 090 | 1 092 | 1 096 | 1 100 | 1 103 |
| 200 - 224 | 1 089 | 1 091 | 1 094 | 1 098 | 1 101 |
| 225 - 249 | 1 088 | 1 090 | 1 093 | 1 096 | 1 099 |
| 250 - 274 | 1 088 | 1 090 | 1 092 | 1 095 | 1 097 |
| 275 - 299 | 1 088 | 1 089 | 1 092 | 1 094 | 1 096 |
| 300 - 324 | 1 087 | 1 089 | 1 091 | 1 093 | 1 095 |
| 325 - 349 | 1 087 | 1 088 | 1 091 | 1 093 | 1 094 |
| 350 - 374 | 1 087 | 1 088 | 1 090 | 1 092 | 1 094 |
| 375 - 399 | 1 087 | 1 088 | 1 090 | 1 092 | 1 093 |
| 400 - 424 | 1 087 | 1 088 | 1 089 | 1 091 | 1 093 |
| 425 - 449 | 1 086 | 1 087 | 1 089 | 1 091 | 1 092 |
| 450 - 474 | 1 086 | 1 087 | 1 089 | 1 090 | 1 092 |
| 475 - 499 | 1 086 | 1 087 | 1 089 | 1 090 | 1 091 |
| 500 OR MORE | 1 086 | 1 087 | 1 088 | 1 090 | 1 091 |

ANNUAL ADJUSTMENT FACTOR FOR CONTRACT RENT (EXCLUDING UTILITIES) IS 1 084

SCHEDULE C [redacted] ANNUAL ADJUSTMENT FACTOR FOR UPDATING SECTION 8 CONTRACT RENTS FOR NEW CONSTRUCTION AND SUBSTANTIAL REHABILITATION (INCLUDING THE HOUSING FINANCE & DEVELOPMENT AGENCIES PROGRAM)
SMSA: CLEVELAND OH

| MONTHLY GROSS RENT | 0 BEDROOMS | 1 BEDROOM | 2 BEDROOMS | 3 BEDROOMS | 4+BEDROOMS |
|---|---|---|---|---|---|
| UNDER $100 | 1 072 | 1 067 | 1 060 | 1 053 | 1 046 |
| 100 - 124 | 1 074 | 1 071 | 1 065 | 1 059 | 1 054 |
| 125 - 149 | 1 076 | 1 073 | 1 068 | 1 064 | 1 060 |
| 150 - 174 | 1 077 | 1 074 | 1 070 | 1 066 | 1 063 |
| 175 - 199 | 1 078 | 1 075 | 1 072 | 1 069 | 1 066 |
| 200 - 224 | 1 078 | 1 076 | 1 073 | 1 070 | 1 068 |
| 225 - 249 | 1 079 | 1 077 | 1 074 | 1 072 | 1 069 |
| 250 - 274 | 1 079 | 1 077 | 1 075 | 1 073 | 1 071 |
| 275 - 299 | 1 079 | 1 078 | 1 076 | 1 073 | 1 072 |
| 300 - 324 | 1 080 | 1 078 | 1 076 | 1 074 | 1 072 |
| 325 - 349 | 1 080 | 1 079 | 1 077 | 1 075 | 1 073 |
| 350 - 374 | 1 080 | 1 079 | 1 077 | 1 075 | 1 074 |
| 375 - 399 | 1 080 | 1 079 | 1 077 | 1 076 | 1 074 |
| 400 - 424 | 1 080 | 1 079 | 1 078 | 1 076 | 1 075 |
| 425 - 449 | 1 080 | 1 080 | 1 078 | 1 077 | 1 075 |
| 450 - 474 | 1 081 | 1 080 | 1 078 | 1 077 | 1 076 |
| 475 - 499 | 1 081 | 1 080 | 1 079 | 1 077 | 1 076 |
| 500 OR MORE | 1 081 | 1 080 | 1 079 | 1 077 | 1 076 |

ANNUAL ADJUSTMENT FACTOR FOR CONTRACT RENT (EXCLUDING UTILITIES) IS 1 083

SCHEDULE C [redacted] ANNUAL ADJUSTMENT FACTOR FOR UPDATING SECTION 8 CONTRACT RENTS FOR NEW CONSTRUCTION AND SUBSTANTIAL REHABILITATION (INCLUDING THE HOUSING FINANCE & DEVELOPMENT AGENCIES PROGRAM)
SMSA: DALLAS-FORT WORTH , TX

| MONTHLY GROSS RENT | 0 BEDROOMS | 1 BEDROOM | 2 BEDROOMS | 3 BEDROOMS | 4+BEDROOMS |
|---|---|---|---|---|---|
| UNDER $100 | 1 083 | 1 079 | 1 074 | 1 068 | 1 064 |
| 100 - 124 | 1 084 | 1 082 | 1 078 | 1 073 | 1 070 |
| 125 - 149 | 1 086 | 1 083 | 1 080 | 1 077 | 1 073 |
| 150 - 174 | 1 086 | 1 085 | 1 082 | 1 079 | 1 076 |
| 175 - 199 | 1 087 | 1 085 | 1 083 | 1 080 | 1 078 |
| 200 - 224 | 1 087 | 1 086 | 1 084 | 1 082 | 1 080 |
| 225 - 249 | 1 088 | 1 087 | 1 085 | 1 083 | 1 081 |
| 250 - 274 | 1 088 | 1 087 | 1 085 | 1 083 | 1 082 |
| 275 - 299 | 1 088 | 1 087 | 1 086 | 1 084 | 1 083 |
| 300 - 324 | 1 088 | 1 088 | 1 086 | 1 084 | 1 083 |
| 325 - 349 | 1 089 | 1 088 | 1 086 | 1 085 | 1 084 |
| 350 - 374 | 1 089 | 1 088 | 1 087 | 1 085 | 1 084 |
| 375 - 399 | 1 089 | 1 088 | 1 087 | 1 086 | 1 085 |
| 400 - 424 | 1 089 | 1 088 | 1 087 | 1 086 | 1 085 |
| 425 - 449 | 1 089 | 1 088 | 1 087 | 1 086 | 1 085 |
| 450 - 474 | 1 089 | 1 089 | 1 088 | 1 087 | 1 086 |
| 475 - 499 | 1 089 | 1 089 | 1 088 | 1 087 | 1 086 |
| 500 OR MORE | 1 089 | 1 089 | 1 088 | 1 087 | 1 086 |

ANNUAL ADJUSTMENT FACTOR FOR CONTRACT RENT (EXCLUDING UTILITIES) IS 1 091

SCHEDULE C [redacted] ANNUAL ADJUSTMENT FACTOR FOR UPDATING SECTION 8 CONTRACT RENTS FOR NEW CONSTRUCTION AND SUBSTANTIAL REHABILITATION (INCLUDING THE HOUSING FINANCE & DEVELOPMENT AGENCIES PROGRAM)
SMSA: DENVER-BOULDER , CO

| MONTHLY GROSS RENT | 0 BEDROOMS | 1 BEDROOM | 2 BEDROOMS | 3 BEDROOMS | 4+BEDROOMS |
|---|---|---|---|---|---|
| UNDER $100 | 1 079 | 1 082 | 1 086 | 1 090 | 1 094 |
| 100 - 124 | 1 078 | 1 080 | 1 083 | 1 087 | 1 089 |
| 125 - 149 | 1 077 | 1 079 | 1 081 | 1 084 | 1 086 |
| 150 - 174 | 1 077 | 1 078 | 1 080 | 1 082 | 1 084 |
| 175 - 199 | 1 076 | 1 077 | 1 079 | 1 081 | 1 083 |
| 200 - 224 | 1 076 | 1 077 | 1 079 | 1 080 | 1 082 |
| 225 - 249 | 1 076 | 1 077 | 1 078 | 1 080 | 1 081 |
| 250 - 274 | 1 075 | 1 076 | 1 078 | 1 079 | 1 080 |
| 275 - 299 | 1 075 | 1 076 | 1 077 | 1 078 | 1 080 |
| 300 - 324 | 1 075 | 1 076 | 1 077 | 1 078 | 1 079 |
| 325 - 349 | 1 075 | 1 076 | 1 077 | 1 078 | 1 079 |
| 350 - 374 | 1 075 | 1 075 | 1 076 | 1 077 | 1 078 |
| 375 - 399 | 1 075 | 1 075 | 1 076 | 1 077 | 1 078 |
| 400 - 424 | 1 075 | 1 075 | 1 076 | 1 077 | 1 078 |
| 425 - 449 | 1 075 | 1 075 | 1 076 | 1 077 | 1 077 |
| 450 - 474 | 1 074 | 1 075 | 1 076 | 1 077 | 1 077 |
| 475 - 499 | 1 074 | 1 075 | 1 076 | 1 076 | 1 077 |
| 500 OR MORE | 1 074 | 1 075 | 1 075 | 1 076 | 1 077 |

ANNUAL ADJUSTMENT FACTOR FOR CONTRACT RENT (EXCLUDING UTILITIES) IS 1 073

SCHEDULE C [redacted] ANNUAL ADJUSTMENT FACTOR FOR UPDATING SECTION 8 CONTRACT RENTS FOR NEW CONSTRUCTION AND SUBSTANTIAL REHABILITATION (INCLUDING THE HOUSING FINANCE & DEVELOPMENT AGENCIES PROGRAM)
SMSA: DETROIT, MI

| MONTHLY GROSS RENT | 0 BEDROOMS | 1 BEDROOM | 2 BEDROOMS | 3 BEDROOMS | 4+BEDROOMS |
|---|---|---|---|---|---|
| UNDER $100 | 1 068 | 1 067 | 1 066 | 1 065 | 1 064 |
| 100 - 124 | 1 069 | 1 068 | 1 067 | 1 066 | 1 065 |
| 125 - 149 | 1 069 | 1 068 | 1 068 | 1 067 | 1 066 |
| 150 - 174 | 1 069 | 1 069 | 1 068 | 1 067 | 1 067 |
| 175 - 199 | 1 069 | 1 069 | 1 068 | 1 068 | 1 067 |
| 200 - 224 | 1 069 | 1 069 | 1 069 | 1 068 | 1 068 |
| 225 - 249 | 1 070 | 1 069 | 1 069 | 1 068 | 1 068 |
| 250 - 274 | 1 070 | 1 069 | 1 069 | 1 068 | 1 068 |
| 275 - 299 | 1 070 | 1 069 | 1 069 | 1 069 | 1 068 |
| 300 - 324 | 1 070 | 1 069 | 1 069 | 1 069 | 1 068 |
| 325 - 349 | 1 070 | 1 070 | 1 069 | 1 069 | 1 069 |
| 350 - 374 | 1 070 | 1 070 | 1 069 | 1 069 | 1 069 |
| 375 - 399 | 1 070 | 1 070 | 1 069 | 1 069 | 1 069 |
| 400 - 424 | 1 070 | 1 070 | 1 069 | 1 069 | 1 069 |
| 425 - 449 | 1 070 | 1 070 | 1 069 | 1 069 | 1 069 |
| 450 - 474 | 1 070 | 1 070 | 1 069 | 1 069 | 1 069 |
| 475 - 499 | 1 070 | 1 070 | 1 070 | 1 069 | 1 069 |
| 500 OR MORE | 1 070 | 1 070 | 1 070 | 1 069 | 1 069 |

ANNUAL ADJUSTMENT FACTOR FOR CONTRACT RENT (EXCLUDING UTILITIES) IS 1 070

SCHEDULE C [redacted] ANNUAL ADJUSTMENT FACTOR FOR UPDATING SECTION 8 CONTRACT RENTS FOR NEW CONSTRUCTION AND SUBSTANTIAL REHABILITATION (INCLUDING THE HOUSING FINANCE & DEVELOPMENT AGENCIES PROGRAM)
SMSA: HONOLULU HI

| MONTHLY GROSS RENT | 0 BEDROOMS | 1 BEDROOM | 2 BEDROOMS | 3 BEDROOMS | 4+BEDROOMS |
|---|---|---|---|---|---|
| UNDER $100 | 1 067 | 1 075 | 1 088 | 1 102 | 1 113 |
| 100 - 124 | 1 062 | 1 069 | 1 079 | 1 089 | 1 098 |
| 125 - 149 | 1 059 | 1 065 | 1 073 | 1 082 | 1 089 |
| 150 - 174 | 1 057 | 1 062 | 1 069 | 1 076 | 1 082 |
| 175 - 199 | 1 056 | 1 060 | 1 066 | 1 072 | 1 078 |
| 200 - 224 | 1 055 | 1 058 | 1 064 | 1 069 | 1 074 |
| 225 - 249 | 1 054 | 1 057 | 1 062 | 1 067 | 1 071 |
| 250 - 274 | 1 053 | 1 056 | 1 060 | 1 065 | 1 069 |
| 275 - 299 | 1 053 | 1 055 | 1 059 | 1 063 | 1 067 |
| 300 - 324 | 1 052 | 1 055 | 1 058 | 1 062 | 1 065 |
| 325 - 349 | 1 052 | 1 054 | 1 057 | 1 061 | 1 064 |
| 350 - 374 | 1 051 | 1 053 | 1 057 | 1 060 | 1 063 |
| 375 - 399 | 1 051 | 1 053 | 1 056 | 1 059 | 1 062 |
| 400 - 424 | 1 051 | 1 053 | 1 055 | 1 058 | 1 061 |
| 425 - 449 | 1 051 | 1 052 | 1 055 | 1 058 | 1 060 |
| 450 - 474 | 1 050 | 1 052 | 1 054 | 1 057 | 1 059 |
| 475 - 499 | 1 050 | 1 052 | 1 054 | 1 056 | 1 059 |
| 500 OR MORE | 1 050 | 1 051 | 1 054 | 1 056 | 1 058 |

ANNUAL ADJUSTMENT FACTOR FOR CONTRACT RENT (EXCLUDING UTILITIES) IS 1 047

SCHEDULE C [redacted] ANNUAL ADJUSTMENT FACTOR FOR UPDATING SECTION 8 CONTRACT RENTS FOR NEW CONSTRUCTION AND SUBSTANTIAL REHABILITATION (INCLUDING THE HOUSING FINANCE & DEVELOPMENT AGENCIES PROGRAM)
SMSA: HOUSTON, TX

| MONTHLY GROSS RENT | 0 BEDROOMS | 1 BEDROOM | 2 BEDROOMS | 3 BEDROOMS | 4+BEDROOMS |
|---|---|---|---|---|---|
| UNDER $100 | 1 058 | 1 057 | 1 057 | 1 056 | 1 055 |
| 100 - 124 | 1 058 | 1 058 | 1 057 | 1 056 | 1 056 |
| 125 - 149 | 1 058 | 1 058 | 1 058 | 1 057 | 1 056 |
| 150 - 174 | 1 059 | 1 058 | 1 058 | 1 057 | 1 057 |
| 175 - 199 | 1 059 | 1 058 | 1 058 | 1 058 | 1 057 |
| 200 - 224 | 1 059 | 1 059 | 1 058 | 1 058 | 1 057 |
| 225 - 249 | 1 059 | 1 059 | 1 058 | 1 058 | 1 058 |
| 250 - 274 | 1 059 | 1 059 | 1 058 | 1 058 | 1 058 |
| 275 - 299 | 1 059 | 1 059 | 1 058 | 1 058 | 1 058 |
| 300 - 324 | 1 059 | 1 059 | 1 059 | 1 058 | 1 058 |
| 325 - 349 | 1 059 | 1 059 | 1 059 | 1 058 | 1 058 |
| 350 - 374 | 1 059 | 1 059 | 1 059 | 1 058 | 1 058 |
| 375 - 399 | 1 059 | 1 059 | 1 059 | 1 058 | 1 058 |
| 400 - 424 | 1 059 | 1 059 | 1 059 | 1 059 | 1 058 |
| 425 - 449 | 1 059 | 1 059 | 1 059 | 1 059 | 1 058 |
| 450 - 474 | 1 059 | 1 059 | 1 059 | 1 059 | 1 058 |
| 475 - 499 | 1 059 | 1 059 | 1 059 | 1 059 | 1 059 |
| 500 OR MORE | 1 059 | 1 059 | 1 059 | 1 059 | 1 059 |

ANNUAL ADJUSTMENT FACTOR FOR CONTRACT RENT (EXCLUDING UTILITIES) IS 1 059

SCHEDULE C [redacted] ANNUAL ADJUSTMENT FACTOR FOR UPDATING SECTION 8 CONTRACT RENTS FOR NEW CONSTRUCTION AND SUBSTANTIAL REHABILITATION (INCLUDING THE HOUSING FINANCE & DEVELOPMENT AGENCIES PROGRAM)

SMSA: KANSAS CITY, MO-KS

| MONTHLY GROSS RENT | 0 BEDROOMS | 1 BEDROOM | 2 BEDROOMS | 3 BEDROOMS | 4+BEDROOMS |
|---|---|---|---|---|---|
| UNDER $100 | 1 061 | 1 057 | 1 051 | 1 046 | 1 040 |
| 100 - 124 | 1 063 | 1 060 | 1 056 | 1 051 | 1 047 |
| 125 - 149 | 1 064 | 1 062 | 1 058 | 1 054 | 1 051 |
| 150 - 174 | 1 065 | 1 063 | 1 060 | 1 057 | 1 054 |
| 175 - 199 | 1 066 | 1 064 | 1 061 | 1 059 | 1 056 |
| 200 - 224 | 1 066 | 1 065 | 1 062 | 1 060 | 1 058 |
| 225 - 249 | 1 067 | 1 065 | 1 063 | 1 061 | 1 059 |
| 250 - 274 | 1 067 | 1 066 | 1 064 | 1 062 | 1 060 |
| 275 - 299 | 1 067 | 1 066 | 1 064 | 1 063 | 1 061 |
| 300 - 324 | 1 067 | 1 066 | 1 065 | 1 063 | 1 062 |
| 325 - 349 | 1 068 | 1 067 | 1 065 | 1 064 | 1 062 |
| 350 - 374 | 1 068 | 1 067 | 1 066 | 1 064 | 1 063 |
| 375 - 399 | 1 068 | 1 067 | 1 066 | 1 064 | 1 063 |
| 400 - 424 | 1 068 | 1 067 | 1 066 | 1 065 | 1 064 |
| 425 - 449 | 1 068 | 1 067 | 1.066 | 1 065 | 1 064 |
| 450 - 474 | 1 068 | 1 068 | 1 066 | 1 065 | 1 064 |
| 475 - 499 | 1 068 | 1 068 | 1 067 | 1 066 | 1 065 |
| 500 OR MORE | 1 068 | 1 068 | 1 067 | 1 066 | 1 065 |

ANNUAL ADJUSTMENT FACTOR FOR CONTRACT RENT (EXCLUDING UTILITIES) IS 1 070

SCHEDULE C [redacted] ANNUAL ADJUSTMENT FACTOR FOR UPDATING SECTION 8 CONTRACT RENTS FOR NEW CONSTRUCTION AND SUBSTANTIAL REHABILITATION (INCLUDING THE HOUSING FINANCE & DEVELOPMENT AGENCIES PROGRAM)

SMSA: LOS ANGELES-LONG BEACH CA

| MONTHLY GROSS RENT | 0 BEDROOMS | 1 BEDROOM | 2 BEDROOMS | 3 BEDROOMS | 4+BEDROOMS |
|---|---|---|---|---|---|
| UNDER $100 | 1 096 | 1 088 | 1 076 | 1 064 | 1 054 |
| 100 - 124 | 1 100 | 1 094 | 1 085 | 1 075 | 1 067 |
| 125 - 149 | 1 102 | 1 097 | 1 090 | 1.082 | 1 076 |
| 150 - 174 | 1 104 | 1 100 | 1 093 | 1 087 | 1 081 |
| 175 - 199 | 1 105 | 1 102 | 1 096 | 1 091 | 1 086 |
| 200 - 224 | 1 106 | 1 103 | 1 098 | 1 093 | 1 089 |
| 225 - 249 | 1 107 | 1 104 | 1 100 | 1 095 | 1 092 |
| 250 - 274 | 1 108 | 1 105 | 1 101 | 1 097 | 1 094 |
| 275 - 299 | 1 108 | 1 106 | 1 102 | 1 099 | 1 095 |
| 300 - 324 | 1 108 | 1 106 | 1 103 | 1 100 | 1 097 |
| 325 - 349 | 1 109 | 1 107 | 1 104 | 1 101 | 1 098 |
| 350 - 374 | 1 109 | 1 107 | 1 105 | 1 102 | 1 099 |
| 375 - 399 | 1 109 | 1 108 | 1 105 | 1 102 | 1 100 |
| 400 - 424 | 1 110 | 1 108 | 1 106 | 1 103 | 1 101 |
| 425 - 449 | 1 110 | 1 108 | 1 106 | 1 104 | 1 102 |
| 450 - 474 | 1 110 | 1 109 | 1 106 | 1 104 | 1 102 |
| 475 - 499 | 1 110 | 1 109 | 1 107 | 1 105 | 1 103 |
| 500 OR MORE | 1 110 | 1 109 | 1 107 | 1 105 | 1 103 |

ANNUAL ADJUSTMENT FACTOR FOR CONTRACT RENT (EXCLUDING UTILITIES) IS 1 113

SCHEDULE C [redacted] ANNUAL ADJUSTMENT FACTOR FOR UPDATING SECTION 8 CONTRACT RENTS FOR NEW CONSTRUCTION AND SUBSTANTIAL REHABILITATION (INCLUDING THE HOUSING FINANCE & DEVELOPMENT AGENCIES PROGRAM)
SMSA: MILWAUKEE WI

| MONTHLY GROSS RENT | 0 BEDROOMS | 1 BEDROOM | 2 BEDROOMS | 3 BEDROOMS | 4+BEDROOMS |
|---|---|---|---|---|---|
| UNDER $100 | 1 036 | 1 033 | 1 029 | 1 024 | 1 020 |
| 100 - 124 | 1 038 | 1 035 | 1 032 | 1 028 | 1 025 |
| 125 - 149 | 1 039 | 1 037 | 1 034 | 1 031 | 1 029 |
| 150 - 174 | 1 039 | 1 038 | 1 035 | 1 033 | 1 031 |
| 175 - 199 | 1 040 | 1 038 | 1 036 | 1 034 | 1 032 |
| 200 - 224 | 1 040 | 1 039 | 1 037 | 1 035 | 1 034 |
| 225 - 249 | 1 040 | 1 039 | 1 038 | 1 036 | 1 035 |
| 250 - 274 | 1 041 | 1 040 | 1 038 | 1 037 | 1 035 |
| 275 - 299 | 1 041 | 1 040 | 1 039 | 1 037 | 1 036 |
| 300 - 324 | 1 041 | 1 040 | 1 039 | 1 038 | 1 037 |
| 325 - 349 | 1 041 | 1 040 | 1 039 | 1 038 | 1 037 |
| 350 - 374 | 1 041 | 1 041 | 1 039 | 1 038 | 1 037 |
| 375 - 399 | 1 041 | 1 041 | 1 040 | 1 039 | 1 038 |
| 400 - 424 | 1 041 | 1 041 | 1 040 | 1 039 | 1 038 |
| 425 - 449 | 1 042 | 1 041 | 1 040 | 1 039 | 1 038 |
| 450 - 474 | 1 042 | 1 041 | 1 040 | 1 039 | 1 039 |
| 475 - 499 | 1 042 | 1 041 | 1 040 | 1 040 | 1 039 |
| 500 OR MORE | 1 042 | 1 041 | 1 040 | 1 040 | 1 039 |

ANNUAL ADJUSTMENT FACTOR FOR CONTRACT RENT (EXCLUDING UTILITIES) IS 1 043

SCHEDULE C [redacted] ANNUAL ADJUSTMENT FACTOR FOR UPDATING SECTION 8 CONTRACT RENTS FOR NEW CONSTRUCTION AND SUBSTANTIAL REHABILITATION (INCLUDING THE HOUSING FINANCE & DEVELOPMENT AGENCIES PROGRAM)
SMSA: MINNEAPOLIS-ST PAUL MN-WI

| MONTHLY GROSS RENT | 0 BEDROOMS | 1 BEDROOM | 2 BEDROOMS | 3 BEDROOMS | 4+BEDROOMS |
|---|---|---|---|---|---|
| UNDER $100 | 1 089 | 1 098 | 1 114 | 1 129 | 1 143 |
| 100 - 124 | 1 084 | 1 091 | 1 103 | 1 115 | 1 126 |
| 125 - 149 | 1 080 | 1 086 | 1 096 | 1 106 | 1 115 |
| 150 - 174 | 1 078 | 1 083 | 1 092 | 1 100 | 1 107 |
| 175 - 199 | 1 076 | 1 081 | 1 088 | 1 095 | 1 102 |
| 200 - 224 | 1 075 | 1 079 | 1 085 | 1 092 | 1 097 |
| 225 - 249 | 1 074 | 1 078 | 1 083 | 1 089 | 1 094 |
| 250 - 274 | 1 073 | 1 076 | 1 082 | 1 087 | 1 091 |
| 275 - 299 | 1 073 | 1 076 | 1 080 | 1 085 | 1 089 |
| 300 - 324 | 1 072 | 1 075 | 1 079 | 1 083 | 1 087 |
| 325 - 349 | 1 072 | 1 074 | 1 078 | 1 082 | 1 086 |
| 350 - 374 | 1 071 | 1 073 | 1 077 | 1 081 | 1 084 |
| 375 - 399 | 1 071 | 1 073 | 1 076 | 1 080 | 1 083 |
| 400 - 424 | 1 070 | 1 072 | 1 076 | 1 079 | 1 082 |
| 425 - 449 | 1 070 | 1 072 | 1 075 | 1 078 | 1 081 |
| 450 - 474 | 1 070 | 1 072 | 1 075 | 1 078 | 1 080 |
| 475 - 499 | 1 070 | 1 071 | 1 074 | 1 077 | 1 079 |
| 500 OR MORE | 1 069 | 1 071 | 1 074 | 1 076 | 1 079 |

ANNUAL ADJUSTMENT FACTOR FOR CONTRACT RENT (EXCLUDING UTILITIES) IS 1 065

SCHEDULE C [redacted] ANNUAL ADJUSTMENT FACTOR FOR UPDATING SECTION 8 CONTRACT RENTS FOR NEW CONSTRUCTION AND SUBSTANTIAL REHABILITATION (INCLUDING THE HOUSING FINANCE & DEVELOPMENT AGENCIES PROGRAM)
SMSA: NEW YORK CITY, NY-NJ

| MONTHLY GROSS RENT | 0 BEDROOMS | 1 BEDROOM | 2 BEDROOMS | 3 BEDROOMS | 4+BEDROOMS |
|---|---|---|---|---|---|
| UNDER $100 | 1 053 | 1 053 | 1 052 | 1 050 | 1 050 |
| 100 - 124 | 1 054 | 1 053 | 1 052 | 1 051 | 1 051 |
| 125 - 149 | 1 054 | 1 053 | 1 053 | 1 052 | 1 051 |
| 150 - 174 | 1 054 | 1 054 | 1 053 | 1 053 | 1 052 |
| 175 - 199 | 1 054 | 1 054 | 1 053 | 1 053 | 1 052 |
| 200 - 224 | 1 054 | 1 054 | 1 053 | 1 053 | 1 053 |
| 225 - 249 | 1 054 | 1 054 | 1 054 | 1 053 | 1 053 |
| 250 - 274 | 1 054 | 1 054 | 1 054 | 1 053 | 1 053 |
| 275 - 299 | 1 054 | 1 054 | 1 054 | 1 054 | 1 053 |
| 300 - 324 | 1 054 | 1 054 | 1 054 | 1 054 | 1 053 |
| 325 - 349 | 1 054 | 1 054 | 1 054 | 1 054 | 1 053 |
| 350 - 374 | 1 054 | 1 054 | 1 054 | 1 054 | 1 054 |
| 375 - 399 | 1 055 | 1 054 | 1 054 | 1 054 | 1 054 |
| 400 - 424 | 1 055 | 1 054 | 1 054 | 1 054 | 1 054 |
| 425 - 449 | 1 055 | 1 054 | 1 054 | 1 054 | 1 054 |
| 450 - 474 | 1 055 | 1 054 | 1 054 | 1 054 | 1 054 |
| 475 - 499 | 1 055 | 1 054 | 1 054 | 1 054 | 1 054 |
| 500 OR MORE | 1 055 | 1 054 | 1 054 | 1 054 | 1 054 |

ANNUAL ADJUSTMENT FACTOR FOR CONTRACT RENT (EXCLUDING UTILITIES) IS 1 055

SCHEDULE C [redacted] ANNUAL ADJUSTMENT FACTOR FOR UPDATING SECTION 8 CONTRACT RENTS FOR NEW CONSTRUCTION AND SUBSTANTIAL REHABILITATION (INCLUDING THE HOUSING FINANCE & DEVELOPMENT AGENCIES PROGRAM)
SMSA: PHILADELPHIA, PA-NJ

| MONTHLY GROSS RENT | 0 BEDROOMS | 1 BEDROOM | 2 BEDROOMS | 3 BEDROOMS | 4+BEDROOMS |
|---|---|---|---|---|---|
| UNDER $100 | 1 054 | 1 053 | 1 052 | 1 050 | 1 049 |
| 100 - 124 | 1 055 | 1 054 | 1 053 | 1 052 | 1 051 |
| 125 - 149 | 1 055 | 1 054 | 1 053 | 1 052 | 1 052 |
| 150 - 174 | 1 055 | 1 055 | 1 054 | 1 053 | 1 052 |
| 175 - 199 | 1 055 | 1 055 | 1 054 | 1 054 | 1 053 |
| 200 - 224 | 1 056 | 1 055 | 1 054 | 1 054 | 1 053 |
| 225 - 249 | 1 056 | 1 055 | 1 055 | 1 054 | 1 054 |
| 250 - 274 | 1 056 | 1 055 | 1 055 | 1 054 | 1 054 |
| 275 - 299 | 1 056 | 1 055 | 1 055 | 1 055 | 1 054 |
| 300 - 324 | 1 056 | 1 056 | 1 055 | 1 055 | 1 054 |
| 325 - 349 | 1 056 | 1 056 | 1 055 | 1 055 | 1 054 |
| 350 - 374 | 1 056 | 1 056 | 1 055 | 1 055 | 1 055 |
| 375 - 399 | 1 056 | 1 056 | 1 055 | 1 055 | 1 055 |
| 400 - 424 | 1 056 | 1 056 | 1 055 | 1 055 | 1 055 |
| 425 - 449 | 1 056 | 1 056 | 1 056 | 1 055 | 1 055 |
| 450 - 474 | 1 056 | 1 056 | 1 056 | 1 055 | 1 055 |
| 475 - 499 | 1 056 | 1 056 | 1 056 | 1 055 | 1 055 |
| 500 OR MORE | 1 056 | 1 056 | 1 056 | 1 055 | 1 055 |

ANNUAL ADJUSTMENT FACTOR FOR CONTRACT RENT (EXCLUDING UTILITIES) IS 1 056

SCHEDULE C [redacted] ANNUAL ADJUSTMENT FACTOR FOR UPDATING SECTION 8 CONTRACT RENTS FOR NEW CONSTRUCTION AND SUBSTANTIAL REHABILITATION (INCLUDING THE HOUSING FINANCE & DEVELOPMENT AGENCIES PROGRAM)
SMSA: PITTSBURGH PA

| MONTHLY GROSS RENT | 0 BEDROOMS | 1 BEDROOM | 2 BEDROOMS | 3 BEDROOMS | 4+BEDROOMS |
|---|---|---|---|---|---|
| UNDER $100 | 1 090 | 1 089 | 1 087 | 1 085 | 1 084 |
| 100 - 124 | 1 091 | 1 090 | 1 088 | 1 087 | 1 086 |
| 125 - 149 | 1 091 | 1 090 | 1 089 | 1 088 | 1 087 |
| 150 - 174 | 1 091 | 1 091 | 1 090 | 1 089 | 1 088 |
| 175 - 199 | 1 092 | 1 091 | 1 090 | 1 089 | 1 089 |
| 200 - 224 | 1 092 | 1 091 | 1 091 | 1 090 | 1 089 |
| 225 - 249 | 1 092 | 1 091 | 1 091 | 1 090 | 1 089 |
| 250 - 274 | 1 092 | 1 092 | 1 091 | 1 090 | 1 090 |
| 275 - 299 | 1 092 | 1 092 | 1 091 | 1 091 | 1 090 |
| 300 - 324 | 1 092 | 1 092 | 1 091 | 1 091 | 1 090 |
| 325 - 349 | 1 092 | 1 092 | 1 091 | 1 091 | 1 091 |
| 350 - 374 | 1 092 | 1 092 | 1 092 | 1 091 | 1 091 |
| 375 - 399 | 1,092 | 1 092 | 1 092 | 1 091 | 1 091 |
| 400 - 424 | 1 092 | 1 092 | 1 092 | 1 091 | 1 091 |
| 425 - 449 | 1 092 | 1 092 | 1 092 | 1 091 | 1 091 |
| 450 - 474 | 1 092 | 1 092 | 1 092 | 1 092 | 1 091 |
| 475 - 499 | 1 092 | 1 092 | 1 092 | 1 092 | 1 091 |
| 500 OR MORE | 1 092 | 1 092 | 1 092 | 1 092 | 1 091 |

ANNUAL ADJUSTMENT FACTOR FOR CONTRACT RENT (EXCLUDING UTILITIES) IS 1 093

SCHEDULE C [redacted] ANNUAL ADJUSTMENT FACTOR FOR UPDATING SECTION 8 CONTRACT RENTS FOR NEW CONSTRUCTION AND SUBSTANTIAL REHABILITATION (INCLUDING THE HOUSING FINANCE & DEVELOPMENT AGENCIES PROGRAM)
SMSA: SAN DIEGO, CA

| MONTHLY GROSS RENT | 0 BEDROOMS | 1 BEDROOM | 2 BEDROOMS | 3 BEDROOMS | 4+BEDROOMS |
|---|---|---|---|---|---|
| UNDER $100 | 1 090 | 1 088 | 1 084 | 1 079 | 1 076 |
| 100 - 124 | 1 092 | 1 090 | 1 086 | 1 083 | 1 000 |
| 125 - 149 | 1 093 | 1 091 | 1 088 | 1 086 | 1 083 |
| 150 - 174 | 1 093 | 1 092 | 1 090 | 1 087 | 1 085 |
| 175 - 199 | 1 094 | 1 092 | 1 090 | 1 088 | 1 087 |
| 200 - 224 | 1 094 | 1 093 | 1 091 | 1 089 | 1 088 |
| 225 - 249 | 1 094 | 1 093 | 1 092 | 1 090 | 1 089 |
| 250 - 274 | 1 094 | 1 094 | 1 092 | 1 091 | 1 090 |
| 275 - 299 | 1 095 | 1 094 | 1 093 | 1 091 | 1 090 |
| 300 - 324 | 1 095 | 1 094 | 1 093 | 1 092 | 1 091 |
| 325 - 349 | 1 095 | 1 094 | 1 093 | 1 092 | 1 091 |
| 350 - 374 | 1 095 | 1 094 | 1 093 | 1 092 | 1 091 |
| 375 - 399 | 1 095 | 1 095 | 1 094 | 1 093 | 1 092 |
| 400 - 424 | 1 095 | 1 095 | 1 094 | 1 093 | 1 092 |
| 425 - 449 | 1 095 | 1 095 | 1 094 | 1 093 | 1 092 |
| 450 - 474 | 1 095 | 1 095 | 1 094 | 1 093 | 1 093 |
| 475 - 499 | 1 095 | 1 095 | 1 094 | 1 093 | 1 093 |
| 500 OR MORE | 1 095 | 1 095 | 1 094 | 1 094 | 1 093 |

ANNUAL ADJUSTMENT FACTOR FOR CONTRACT RENT (EXCLUDING UTILITIES) IS 1 097

SCHEDULE C [redacted] ANNUAL ADJUSTMENT FACTOR FOR UPDATING SECTION 8 CONTRACT RENTS FOR NEW CONSTRUCTION AND SUBSTANTIAL REHABILITATION (INCLUDING THE HOUSING FINANCE & DEVELOPMENT AGENCIES PROGRAM)
SMSA: SAN FRANCISCO-OAKLAND CA

| MONTHLY GROSS RENT | 0 BEDROOMS | 1 BEDROOM | 2 BEDROOMS | 3 BEDROOMS | 4+BEDROOMS |
|---|---|---|---|---|---|
| UNDER $100 | 1 086 | 1 094 | 1.104 | 1 114 | 1 123 |
| 100 - 124 | 1 085 | 1 090 | 1 097 | 1 105 | 1 112 |
| 125 - 149 | 1 083 | 1 087 | 1 093 | 1 099 | 1 105 |
| 150 - 174 | 1 082 | 1 085 | 1 090 | 1 095 | 1 100 |
| 175 - 199 | 1 081 | 1 083 | 1 088 | 1 093 | 1 096 |
| 200 - 224 | 1 080 | 1 082 | 1 086 | 1 090 | 1 094 |
| 225 - 249 | 1 079 | 1 081 | 1 085 | 1 089 | 1 092 |
| 250 - 274 | 1 079 | 1 081 | 1 084 | 1 087 | 1 090 |
| 275 - 299 | 1 078 | 1 080 | 1 083 | 1 086 | 1 089 |
| 300 - 324 | 1 078 | 1 080 | 1.082 | 1 085 | 1 087 |
| 325 - 349 | 1 078 | 1 079 | 1.082 | 1 084 | 1 086 |
| 350 - 374 | 1.077 | 1 079 | 1 081 | 1 083 | 1 086 |
| 375 - 399 | 1 077 | 1 078 | 1 081 | 1 083 | 1 085 |
| 400 - 424 | 1 077 | 1 078 | 1 080 | 1 082 | 1 084 |
| 425 - 449 | 1 077 | 1 078 | 1 080 | 1 082 | 1 083 |
| 450 - 474 | 1 076 | 1 078 | 1.079 | 1.081 | 1 083 |
| 475 - 499 | 1.076 | 1 077 | 1 079 | 1 081 | 1 082 |
| 500 OR MORE | 1 076 | 1 077 | 1 079 | 1 081 | 1 082 |

ANNUAL ADJUSTMENT FACTOR FOR CONTRACT RENT (EXCLUDING UTILITIES) IS 1 074

SCHEDULE C [redacted] ANNUAL ADJUSTMENT FACTOR FOR UPDATING SECTION 8 CONTRACT RENTS FOR NEW CONSTRUCTION AND SUBSTANTIAL REHABILITATION (INCLUDING THE HOUSING FINANCE & DEVELOPMENT AGENCIES PROGRAM)
SMSA: SEATTLE-EVERETT, WA

| MONTHLY GROSS RENT | 0 BEDROOMS | 1 BEDROOM | 2 BEDROOMS | 3 BEDROOMS | 4+BEDROOMS |
|---|---|---|---|---|---|
| UNDER $100 | 1 089 | 1 082 | 1 071 | 1.059 | 1.049 |
| 100 - 124 | 1 093 | 1 088 | 1 079 | 1 070 | 1 062 |
| 125 - 149 | 1 096 | 1 091 | 1 084 | 1 076 | 1 070 |
| 150 - 174 | 1 098 | 1 094 | 1 087 | 1.081 | 1 076 |
| 175 - 199 | 1 099 | 1 095 | 1.090 | 1.085 | 1 080 |
| 200 - 224 | 1 100 | 1.097 | 1 092 | 1 087 | 1 083 |
| 225 - 249 | 1 101 | 1 098 | 1 094 | 1.089 | 1 086 |
| 250 - 274 | 1 101 | 1 099 | 1 095 | 1 091 | 1 088 |
| 275 - 299 | 1 102 | 1 099 | 1.098 | 1.092 | 1 089 |
| 300 - 324 | 1 102 | 1 100 | 1 097 | 1 094 | 1 091 |
| 325 - 349 | 1 102 | 1 101 | 1 098 | 1 094 | 1 092 |
| 350 - 374 | 1 103 | 1 101 | 1 098 | 1 095 | 1 093 |
| 375 - 399 | 1 103 | 1 101 | 1 099 | 1 096 | 1 094 |
| 400 - 424 | 1 103 | 1 102 | 1.099 | 1 097 | 1 095 |
| 425 - 449 | 1 103 | 1 102 | 1.100 | 1 097 | 1 095 |
| 450 - 474 | 1 104 | 1 102 | 1 100 | 1 098 | 1 096 |
| 475 - 499 | 1 104 | 1 102 | 1 100 | 1 098 | 1 096 |
| 500 OR MORE | 1 104 | 1 103 | 1 101 | 1 099 | 1 097 |

ANNUAL ADJUSTMENT FACTOR FOR CONTRACT RENT (EXCLUDING UTILITIES) IS 1 107

SCHEDULE C [redacted] ANNUAL ADJUSTMENT FACTOR FOR UPDATING SECTION 8 CONTRACT RENTS FOR NEW CONSTRUCTION AND SUBSTANTIAL REHABILITATION (INCLUDING THE HOUSING FINANCE & DEVELOPMENT AGENCIES PROGRAM)
SMSA: ST LOUIS, MO-IL

| MONTHLY GROSS RENT | 0 BEDROOMS | 1 BEDROOM | 2 BEDROOMS | 3 BEDROOMS | 4+BEDROOMS |
|---|---|---|---|---|---|
| UNDER $100 | 1 061 | 1 062 | 1 065 | 1 067 | 1 069 |
| 100 - 124 | 1 060 | 1 061 | 1 063 | 1 065 | 1 066 |
| 125 - 149 | 1 060 | 1 061 | 1 062 | 1 063 | 1 065 |
| 150 - 174 | 1 059 | 1 060 | 1 061 | 1 063 | 1 064 |
| 175 - 199 | 1 059 | 1 060 | 1 061 | 1 062 | 1 063 |
| 200 - 224 | 1 059 | 1 060 | 1 060 | 1 061 | 1 062 |
| 225 - 249 | 1 059 | 1 059 | 1 060 | 1 061 | 1 062 |
| 250 - 274 | 1 059 | 1 059 | 1 060 | 1 061 | 1 061 |
| 275 - 299 | 1 059 | 1 059 | 1 060 | 1 060 | 1 061 |
| 300 - 324 | 1 058 | 1 059 | 1 060 | 1 060 | 1 061 |
| 325 - 349 | 1 058 | 1 059 | 1 059 | 1 060 | 1 060 |
| 350 - 374 | 1 058 | 1 059 | 1 059 | 1 060 | 1 060 |
| 375 - 399 | 1 058 | 1 059 | 1 059 | 1 060 | 1 060 |
| 400 - 424 | 1 058 | 1 059 | 1 059 | 1 060 | 1 060 |
| 425 - 449 | 1 058 | 1 059 | 1 059 | 1 059 | 1 060 |
| 450 - 474 | 1 058 | 1 058 | 1 059 | 1 059 | 1 060 |
| 475 - 499 | 1 058 | 1 058 | 1 059 | 1 059 | 1 060 |
| 500 OR MORE | 1 058 | 1 058 | 1 059 | 1 059 | 1 059 |

ANNUAL ADJUSTMENT FACTOR FOR CONTRACT RENT (EXCLUDING UTILITIES) IS 1 058

SCHEDULE C [redacted] ANNUAL ADJUSTMENT FACTOR FOR UPDATING SECTION 8 CONTRACT RENTS FOR NEW CONSTRUCTION AND SUBSTANTIAL REHABILITATION (INCLUDING THE HOUSING FINANCE & DEVELOPMENT AGENCIES PROGRAM)
SMSA: WASHINGTON DC-MD-VA

| MONTHLY GROSS RENT | 0 BEDROOMS | 1 BEDROOM | 2 BEDROOMS | 3 BEDROOMS | 4+BEDROOMS |
|---|---|---|---|---|---|
| UNDER $100 | 1 063 | 1 066 | 1 069 | 1 073 | 1 076 |
| 100 - 124 | 1 062 | 1 064 | 1 067 | 1 070 | 1 072 |
| 125 - 149 | 1 061 | 1 063 | 1 065 | 1 068 | 1 070 |
| 150 - 174 | 1 061 | 1 062 | 1 064 | 1 066 | 1 068 |
| 175 - 199 | 1 060 | 1 062 | 1 063 | 1 065 | 1 067 |
| 200 - 224 | 1 060 | 1 061 | 1 063 | 1 064 | 1 065 |
| 225 - 249 | 1 060 | 1 061 | 1 062 | 1 063 | 1 065 |
| 250 - 274 | 1 060 | 1 060 | 1 062 | 1 063 | 1 064 |
| 275 - 299 | 1 060 | 1 060 | 1 061 | 1 062 | 1 063 |
| 300 - 324 | 1 059 | 1 060 | 1 061 | 1 062 | 1 063 |
| 325 - 349 | 1 059 | 1 060 | 1 061 | 1 062 | 1 063 |
| 350 - 374 | 1 059 | 1 060 | 1 061 | 1 062 | 1 062 |
| 375 - 399 | 1 059 | 1 060 | 1 060 | 1 061 | 1 062 |
| 400 - 424 | 1 059 | 1 059 | 1 060 | 1 061 | 1 062 |
| 425 - 449 | 1 059 | 1 059 | 1 060 | 1 061 | 1 062 |
| 450 - 474 | 1 059 | 1 059 | 1 060 | 1 061 | 1 061 |
| 475 - 499 | 1 059 | 1 059 | 1 060 | 1 061 | 1 061 |
| 500 OR MORE | 1 059 | 1 059 | 1 060 | 1 060 | 1 061 |

ANNUAL ADJUSTMENT FACTOR FOR CONTRACT RENT (EXCLUDING UTILITIES) IS 1 058

[FR Doc 79-1547 Filed 1-17-79; 8:45 am]

federal register

THURSDAY, JANUARY 18, 1979
PART VI

# DEPARTMENT OF ENERGY

## Economic Regulatory Administration

# PETROLEUM SUPPLY SHORTAGE; STANDBY PRODUCT ALLOCATION AND PRICE REGULATIONS AND IMPOSED ALLOCATION FRACTIONS

[6450-01-M]

## Title 10—Energy

## CHAPTER II—DEPARTMENT OF ENERGY

[Docket No. ERA-R-78-15]

# STANDBY PRODUCT ALLOCATION AND PRICE REGULATIONS AND IMPOSED ALLOCATION FRACTIONS

AGENCY: Economic Regulatory Administration, DOE.

ACTION: Final rule.

SUMMARY: The Economic Regulatory Administration ("ERA") of the Department of Energy ("DOE") hereby adopts in standby status three special rules to be appended to 10 CFR Parts 210, 211 and 212, respectively. These special rules, which would be made effective to govern the allocation and pricing of refined petroleum products in a petroleum supply shortage, are adopted today in a standby status. These special rules provide the Administrator of the ERA with revised allocation rules, the discretion to impose maximum allocation fractions and revised pricing provisions. To further the objectives of the Emergency Petroleum Allocation Act of 1973 ("EPAA"), as amended, the Administrator may order the provisions of these special rules into effect on a national or regional basis, at any level of distribution, and upon any or all refined petroleum products subject to the EPAA, including both those already subject to the price and allocation regulations and those that have previously been exempted.

DATES: Adopted immediately in standby status. Further comments due on or before March 16, 1979.

ADDRESSES: Send comments to: Department of Energy, Public Hearing Management, Docket No. ERA-R-78-15, Room 2313, 2000 M Street NW., Washington, D.C. 20461.

FOR FURTHER INFORMATION CONTACT:

William Webb (Office of Public Information), 2000 M Street NW., Room B110, Washington, D.C. 20461 (202) 634-2170.

William Caldwell, (Office of Regulations and Emergency Planning), 2000 M Street NW., Room 2304, Washington, D.C. 20461, (202) 254-8034.

W. Mayo Lee or Joel M. Yudson (Office of General Counsel), 12th and Pennsylvania Avenue NW., Room 5138, Washington, D.C. 20461 (202) 633-8624.

SUPPLEMENTARY INFORMATION:

I. General Features of the New Rules

II. Discussion of Comments Received

A. Notice and Scope of Authority

B. Base Period

C. Imposed Allocation Fraction and Storage Requirement

D. Leaded and Unleaded Gasoline

E. Alternate Fuel Capability

F. Pricing Provisions

G. Delegation of Authority to the States

III. Specific Provisions of Final Rules

A. Special Rule No. 1 to Part 211

1. Activation of Special Rule.
2. Imposed Allocation Fractions.
3. Updated Base Period.
4. Adjustment of Base Period Volumes for Certain Users of Kerosene-Base Jet Fuel, Middle Distillates and Residual Fuel Oil.
5. Other Amendments to Part 211.

B. Special Rule No. 1 to Part 210

C. Special Rule No. 1 to Part 212

1. Refiner Price Rule.
2. Reseller Price Rule.

IV. Additional Comments Requested

## I. General Features of the New Rules

These special rules of 10 CFR Parts 210, 211 and 212 set forth standby product allocation and price rules. These price and allocations rules are part of an overall effort by the Department of Energy to put into place various standby regulatory measures that could be used in the event of a significant national or regional crude oil or refined product shortage, or a widespread pattern of inequitable prices or, if otherwise necessary, to attain the objectives set forth in section 4(b)(1) of the Emergency Petroleum Allocation Act of 1973, as amended (Pub. L. 93-159, EPAA). The other parts of this effort that have been announced include the newly issued final Emergency Standby Mandatory Crude Oil and Refinery Yield Control Programs; a proposed program for U.S. participation in the international allocation of petroleum under the terms of the International Energy Agreement (IEA), on which a hearing was held June 13, 1978; and the proposed motor gasoline rationing plan and regulations (43 FR 28134, June 28, 1978) on which public hearings were held in July and August 1978. These regulations together will fulfill the United States' commitments under the IEA and will help the Federal government to deal with any severe petroleum shortage. It is intended that in the event an emergency would occur, the three special rules adopted today, together with the standby crude oil regulations, would be made effective before gasoline rationing. If rationing later becomes necessary, certain provisions of the standby product regulations, such as an updated base period, will complement the gasoline rationing program.

Under section 12(f) of the EPAA, any oil or refined petroleum product which is exempted from price or allocation regulations pursuant to section 551 of the Energy Policy and Conservation Act (EPCA), Pub. L. 94-163, is subject to the reimposition of controls if DOE determines that reimposition is necessary for the achievement of, and is consistent with, the objectives specified in section 4(b)(1) of the EPAA. Consequently, the effect of a decontrol action is to place the controls in a "standby" status unless and until the need for the controls again arises. Controls may be reimposed and, once reimposed, may be removed a second time without congressional review under section 551 of EPCA.

The standby regulations adopted today are in addition to, rather than a replacement for, the regulations that went into standby status when certain refined petroleum products, such as middle distillates and residual fuel oil, were exempted from controls. Either could theoretically be reimposed if needed. However, the regulations currently in standby status (that is, those that were in effect when products were deregulated) are those that evolved during a period in which the products in question were in relatively plentiful supply. Those that are adopted today are designed for use in a period when shortages of product exist or are imminent. The regulations adopted today will also be available if necessary to supersede those regulations currently in effect for products such as gasoline that have not yet been exempted from controls.

In general, the regulations now adopted will provide the Administrator of the ERA (the "Administrator") with the flexibility, in conjunction with the partial or complete reimposition of the petroleum allocation and price regulations on some or all products that have been exempted from such regulations, to update the petroleum allocation or price regulations, or both, to a more current basis (including more recent base periods for both previously exempted and controlled refined petroleum products and residual fuel oil). The Administrator may also mandate national or regional maximum allocation fractions on some or all products to restrain abrupt inventory drawdowns in shortage situations. If mandatory allocation fractions are imposed, the special rules will also require suppliers to store product in inventory during the early stages of abrupt interruptions or other

possible shortages to ensure an equitable distribution of available supplies over a longer period of time so as to mitigate the long-term economic dislocations caused by petroleum supply shortages.

These regulations also give the Administrator authority to limit the allocation of kerosene-base jet fuel, middle distillates and residual fuel oil to firms that use them for industrial, electric utility or refinery fuel purposes if the purchaser has or could reasonably have been expected to have in place an alternate fuel source, including natural gas or propane. These provisions will assist in the implementation of the policy of the Powerplant and Industrial Fuel Use Act of 1978 and the DOE's recently announced policy to switch major users of middle distillates particularly to natural gas or propane where such fuel is available.

The period of effectiveness of the standby regulations, the exact provisions to be implemented, the products, class of persons and class of transactions subject to the rules and the areas of the country where they are applicable are left to the discretion of the Administrator at the time the rules are ordered into effect. For instance, the Administrator might act quite differently in addressing a supply interruption of a known, limited duration (resulting, for example, from an accident or single act of sabotage) than in addressing a situation where supplies of a particular product, such as unleaded gasoline, become short and prices rise to inequitable levels.

Imposed allocation fractions under Special Rule No. 1 to Part 211 differ from the allocation fraction requirements in Subpart A of Part 211 in that they are established by the Administrator and are not a function of a supplier's supply obligations and allocable supply. By imposing a mandatory allocation fraction, the Administrator determines the maximum extent to which suppliers would be permitted to meet obligations to base period purchasers, regardless of amount of supply available to them.

## II. Discussion of Comments Received

We received approximately 150 comments on the proposal (43 FR 29565, July 10, 1978), including written submissions and oral statements presented at the national and regional hearings. A discussion of the major issues raised is included here.

### A. Notice and Scope of Authority

One of the principal issues raised by the comments is whether additional notice is required before the Administrator of the ERA can reimpose controls. Commenters stated that if the Administrator acts without prior notice, such action would be violative of provisions of the Administrative Procedure Act and the Department of Energy Organization Act (Pub. L. 95-91, DOE Act) requiring that prior notice and opportunity for comment be given to the public and the Federal Energy Regulatory Commission (FERC). If such provisions are not included, it was suggested that set indices or "trigger" conditions be established for reimposition of controls. In this manner, industry would have notice of impending controls independent of action by the Administrator. Similarly, commenters requested that the standby regulations include a "sunset" provision that would terminate the effectiveness of the controls independently of action by the Administrator.

Other commenters questioned the authority of the ERA Administrator to reimpose controls because such action would be outside of his authority under DOE Delegation Order No. 0204-4, which, it was asserted, gives the Administrator the authority to administer the allocation and price regulations, but not to reimpose controls. In this connection, other commenters stated that the EPAA refers only to *national* shortages and therefore any actions of the Administrator which would affect only a particular region would be beyond his authority.

With respect to currently exempt products, the amendments adopted today provide that the standby product price and allocation regulations would be applicable only to the extent controls are reimposed on specific products. Actions taken under these special rules, whether on a national or regional basis, would be carried out as prescribed by section 12(f) of the EPAA as necessary to attain the objectives of section 4(b)(1) of the EPAA. We have determined that the FERC does not have to be notified in advance of action under these regulations, since the FERC was notified of the proposed standby regulations themselves and has declined to determine under Section 404 of the DOE Act that the matters raised herein may significantly affect any function within its jurisdiction under sections 402(a)(1), (b) and (c)(1) of the DOE Act.

We have also retained in the final rule the ERA Administrator as the official having authority to reimpose controls and administer the standby program. The Administrator's authority to "* * * adopt rules, issue orders, * * * and take such other action as may be necessary and appropriate to * * * administer * * * (t)he allocation and pricing of crude oil, residual fuel oil, and refined petroleum products, pursuant to the provisions of the Emergency Petroleum Allocation Act of 1973 * * *" (DOE Delegation Order No. 0204-4) clearly includes the authority to make the necessary determinations under EPAA section 12(f) to reimpose controls on some or all products and crude oil by implementing the standby regulations. The Administrator's authority is not limited merely to administering existing regulations but extends to the *function* of allocating and providing price rules for crude oil, residual fuel oil, and refined petroleum products.

We have also retained in the final rule those provisions that would authorize the Administrator to activate the standby regulations on a regional basis only. There is nothing in the legislative history of the EPAA to suggest that Congress intended that this authority could be exercised only on a national basis where there was a national shortage of crude oil or refined petroleum products. On the contrary, the Conference Report indicates that Congress "expressly intended to give the President flexibility to act selectively," including the authority to allocate on a regional basis. *See* 1 Fed. Energy Guidelines ¶10,610, p. 10,619-6. (While this quotation appears in the context of a discussion of crude oil allocation, the statutory objectives under discussion are equally applicable to refined products.) Clearly this language and the proscriptions in section 4(b)(1) regarding equitable allocation among all regions of the country and the minimization of economic distortion indicates that the Administrator has authority to act to deal with regional shortages or dislocations by activating the standby regulations on a regional basis.

As to the possibility of establishing indices which would automatically cause the controls to take effect, our experience with such indices following the exemption of middle distillates leads us to conclude that they are not needed here, would deprive the Administrator of the flexibility to tailor the programs to the situation at hand, and could have the potential for distorting market conditions. Therefore, the suggestion made in the comments that such indices be established has not been adopted.

We have, however, decided to adopt the suggestion made in the comments that the activated standby regulations automatically revert to standby status after a specified period of time. A ninety-day sunset provision has been provided. This provision can be overridden by the ERA Administrator if he determines that the continuation of controls beyond 90 days (including successive 90-day periods) is necessary.

B. BASE PERIOD

The allocation base period set forth in the notice generated a great deal of comment. The base period as proposed was defined as the month or quarter corresponding to the current month or quarter in the 12-month period ending with the second full month prior to the month in which the Administrator issues an order effectuating the Special Rule, or such other 12-month period as the Administrator should consider appropriate. Commenters expressed concern over the Administrator's power to establish "any other base period as he may deem appropriate" as possibly being too arbitrary. Some persons felt that the base period proposed would be too close to a crisis to be truly representative of transactions. They suggested that the base period should be the 12-month period ending a full calendar year before the last day of the month preceding the imposition of Special Rule No. 1. Others felt that 1972 was the last normal year of distillate sales and therefore should be reflected in any base period calculations for that product. Still others requested the retention of the current base period allocation for middle distillates, propane and naphtha. There were also others who asked that the base period should be the same for all products placed under control at a given time.

In addition, there were commenters that opposed the idea of having any set base period. One utility stated that the concept of a base period ignores the usage for "peak shaving", the process by which a gas utility supplements its basic pipeline supplies during periods of peak customer demand. Such requirements, it was stated, are weather-related and do not necessarily pertain to usage during an historical period.

As can be seen from the divergent comments, it is impossible, in advance of an acutual situation necessitating the activation of the special rules, to state a precise mechanism for determining the base period or base date which would be equitable to most affected persons. We continue to believe that a 12-month period ending with the second full month prior to activation will in most instances be an appropriate base period but that authority must be retained to make it a different period if that period is for any reason not a representative one on which to base an allocation program. Accordingly, as proposed, we retain the Administrator's flexibility to establish a different base period if appropriate, including the authority to update the base period on a rolling or periodic basis.

C. IMPOSED ALLOCATION FRACTIONS AND STORAGE REQUIREMENTS

In regard to imposed allocation fractions, commenters were concerned primarily with the situation of not having adequate product to meet the imposed allocation fraction and the costs of having to acquire such product. These concerns were based on a misapprehension of the proposal which is clarified below.

Although many commenters felt that the storage requirement for "excess" product was a good idea, those opposed to the provision pointed out the complications that could arise. It would be difficult to implement an enforced storage requirement just before or during an emergency when the demand would be greatest. Commenters stated that the mandatory storage requirement creates costs that a person without such capacity would not incur, which would in turn permit that seller to have lower costs and therefore lower selling prices. This would consequently tend to penalize those with storage capabilities. Then too, if jobbers and dealers have to store excess product, great problems of financing, credit limits and cash flow will result. Finally, commenters pointed out that in order for a refinery to operate at its peak output, storage tanks should never be more than 70 percent full. Thus, it is alleged that requiring storage in excess of this percentage would create an even greater risk of shortages by lowering the potential utilization of refining capacity.

While we recognize that an enforced storage requirement will be difficult to implement when demand is great, it is precisely because we wish to preserve available supplies over an extended period that the requirement will be imposed. Although storage costs could be passed through in the prices of those firms storing product, the EPAA prohibits the ERA from setting minimum prices for those firms without storage capability. In deciding to impose maximum allocation fractions, the Administrator will have to weigh the benefits of stretching available supplies against possible reductions in refinery output and financial hardships caused by such action.

D. LEADED AND UNLEADED GASOLINE

The question raised in the preamble to the proposed rule concerning the allocation and pricing of leaded and unleaded gasoline as separate products produced conflicting comments. The majority seemed to prefer the present allocation system, but a number of commenters favored separate allocation. The prevalent opinion seemed to be that the present system is more responsive to market fluctuations as customer usage varies. One person suggested that if these products were to be allocated separately, this could most effectively be done at the prime supplier level. In general, persons who commented on the price issues stated that the price differential between the products should not be regulated.

Upon consideration of the comments received, we have decided not to include a provision establishing separate allocation levels for leaded and unleaded gasoline, but rather will retain present section 211.108, which provides that a base period purchaser of gasoline is entitled to a volume of unleaded gasoline which bears the same ratio to the purchaser's allocation entitlement as the supplier's supply of unleaded gasoline bears to its total gasoline supply. This provision should allow for the equitable distribution of unleaded gasoline to distributors and dealers as the demand for unleaded gasoline grows relative to leaded, and it has the necessary flexibility built into it to take account of the differing demands for unleaded gasoline in different regions of the country.

Provisions applicable to the separate pricing of leaded and unleaded gasoline are discussed *infra*. The price provisions do permit unleaded gasoline to be designated as a specified product for which separate computations of maximum selling prices would be required.

E. ALTERNATE FUEL CAPABILITY

The July notice asked for comments on whether provision should be made in these regulations for adjustment of allocation rights by rule or order as either a positive or negative incentive to encourage major users of refined petroleum products to use alternate fuels or to install and utilize cogeneration capability. It was suggested, for example, that allocation levels to installations capable of using an alternate fuel or installing the capability to use it could be assigned a lesser priority or allocation level, and that allocations to cogeneration facilities could receive a higher priority or allocation level.

Notwithstanding that few direct comments on these issues were received, we have decided to provide the Administrator with the flexibility to reduce, by either a general or case-by-case order, a firm's use of middle distillates, kerosene-base jet fuel or residual fuel oil for industrial, electric utility or refinery fuel uses where it has in place, or should have installed, the capability to use other available sources of energy that are in more abundant supply. Since the issuance of the notice of proposed rulemaking, it has become apparent that natural gas and propane supplies in particular are increasingly available for industrial and utility uses and that in many instances it is in the national interest for

a firm to use natural gas in lieu of a petroleum based product. The Department of Energy has recently announced a policy of encouraging shifts from petroleum products, particularly middle distillates, to natural gas and has proposed regulations that would allow it to exempt utilities from provisions of the Powerplant and Industrial Fuel Use Act of 1978 that would otherwise prevent such switching. (44 FR 1694, January 5, 1979.) Under the standby rules adopted today, the Administrator would be authorized to take into account any available alternate form of energy, including natural gas, in establishing allocation levels for industrial, electric utility and refinery users of kerosene-base jet fuel, middle distillates and residual fuel oil.

F. PRICING PROVISIONS

A provision of the proposed regulations that provoked a considerable response was that which eliminated the provision in present Part 212 that allows costs not recovered in the current month to be "banked" and recovered in a subsequent month. Most persons who commented thought that banks should be retained because their elimination would violate the dollar-for-dollar cost passthrough provision of section 4(b)(2)(A) of the EPAA and that the ERA's fear of price increases was unfounded. This fear was unfounded, the commenters said, primarily because present price rules prohibit more than 10 percent of the accumulated banks to be passed through in any one month. Additionally, commenters asserted that the elimination of the banks would create wild-fluctuations in prices because sellers would try to recoup as much of their increased costs as possible during the current month.

The final rule provides that banks of unrecovered costs of specified products existing on the date the special price rule is made effective may not be recouped during the period this special rule is in effect except as permitted by the Administrator. It is not anticipated that previously accumulated banks will be allowed to be recovered except perhaps in exceptional circumstances involving seasonal products. This will prevent sellers from taking advantage of a shortage to pass through increased costs that could not be recovered under normal competitive conditions. In addition, the Administrator is given discretion to eliminate a portion or all of the banked costs for covered products accumulated prior to the date of activation of the special rule. However, the special price rule does permit the banking and recoupment of unrecovered costs incurred *subsequent* to the effectuation of the rule.

We received several comments on the proposed elimination of the class of purchaser rule. Some commenters stated that the elimination of the rule would simply conform the special rule to existing industry practice and would eliminate unnecessary complexity and distortion. However, others stated that the elimination of the rule could have anticompetitive effects by altering some independent marketers' positions in the market. After weighing these comments carefully, we have decided to retain the class of purchaser rule for refiners but substantially eliminate it for resellers and retailers.

G. DELEGATION OF AUTHORITY TO THE STATES

We envisage that in some instances it may be appropriate to delegate to the States some of the allocation, pricing and enforcement authority contained in the standby regulations adopted today. Such delegation has been made in the past with respect to the allocation of refined products, for instance, in Puerto Rico. The rule adopted today does not in itself delegate any authority under these regulations to the States. However, the Administrator possesses the power to so delegate under section 5 of the EPAA, and it is our intention that such authority will be exercised in those instances where there is merit in allowing States to tailor the regulations or their enforcement to problems unique to their area. In particular, if these special rules are activated, the function of enforcing price controls on gasoline and other products at the retail level may be delegated to the States. In the comments requested on the special rules, we particularly invite discussion of whether enforcement authority at the retail level should be delegated to the States, whether certain rule-making or administration, as well as enforcement, authority should be delegated to the States, and whether the delegated authority should extend to other products besides gasoline, such as middle distillates and propane.

III. SPECIFIC PROVISIONS OF FINAL RULE

A. SPECIAL RULE NO. 1 TO PART 211

1. *Activation of Special Rule.* The provisions of Special Rule No. 1 to Part 211 become effective if the international crude oil allocation provisions of the Agreement on an International Energy Program take effect, unless the Secretary of Energy expressly decides otherwise. At present, the "trigger" mechanism of the International Energy Program (IEP) consists of either of the following occurrences: (1) A general interruption of at least seven percent of the participating countries' total oil consumption during a particular period, or (2) a supply interruption of at least seven percent of any one participating country's or a major region of one country's consumption during a particular period. These criteria become, therefore, a part of these special rules in order to permit these rules to aid in the satisfaction of the United States' responsibility under the IEP's provisions.

Any or all of the provisions of the special rule may also be ordered into effect at any time by the ERA Administrator. He may make the special rule effective on either a national or regional basis, upon any category of refined petroleum product or products and residual fuel oil, and with respect to a class of persons or class of transactions.

Unless otherwise specified by the Administrator, Special Rule No. 1 when activated will apply to any firm engaged in the production, distribution or consumption of refined petroleum products and residual fuel oil produced or imported into the United States. To attain the objectives of section 4(b)(1) of the EPAA, it may be ordered into effect with respect to any product currently subject to the provisions of Part 211, and, to the extent the allocation regulations are reimposed on any product previously exempted, it may also be made effective as to such a product. When the special rule will be in effect as to previously exempt products, it will supersede the exemption provisions contained in § 211.1(b) and any other inconsistent provision of Part 211.

Although the proposed rule issued in July 1978 would have limited the discretion of the Administrator to impose the standby product allocation rule to situations in which a severe supply interruption would have occurred or been imminent, it has become apparent that the need for standby allocation regulations is wider than for those emergencies caused by severe supply interruptions. Significant crude oil or product shortages can occur in other situations such as demand surges beyond refiners' supply capabilities. Such occurrences could lead to rapid increases in price or other effects similar to those caused by severe supply interruptions. The standby regulations as adopted are designed to prevent significant adverse impacts regardless of their cause.

2. *Imposed Allocation Fractions.* The special rule will permit the ERA Administrator to set maximum allocation fractions for suppliers of any product subject to the allocation regulations. Imposed allocation fractions will not require suppliers to distribute more product than they have available. Rather, by imposing allocation fractions, the Administrator will designate a maximum fraction of an allocation

requirement that would be distributable to each purchaser. Such fractions may be imposed nationwide or only in selected geographic areas, and they may apply only to categories of a refined petroleum product or to certain classes of suppliers, purchasers, users or transactions. At the time an order imposing allocation fractions is issued, the class of persons or transactions affected will be specifically described. Such an order may apply only to refiners and other prime suppliers, or it may also appy to other categories of suppliers.

An "imposed allocation fraction" will be defined as a fraction imposed by the Administrator which represents the maximum proportion of a supplier's total adjusted base period supply obligations that it will be permitted to supply. It does not prevent a supplier from declaring a smaller fraction and thereby distributing less product if its allocable supply is not large enough to meet the imposed fraction. The supply obligations referred to in the definition of "imposed allocation fraction" are the obligations to purchasers whose allocation levels are subject to an allocation fraction, and will not apply to obligations to purchasers not subject to an allocation fraction (that is, certain high priority users) and to product deliverable into state set-asides.

Under Subpart A of Part 211, § 211.10(b)(2) provides the method of calculating an allocation fraction when a firm knows its supply obligations and allocable supply for an allocation period. The regulations require that product first be distributed to purchasers not subject to an allocation fraction in amounts sufficient to satisfy such purchasers' total current requirements or 100 percent of their base period volumes (as determined by the appropriate allocation level), and to satisfy state set-aside obligations. As already stated, the remaining supply, the "allocable" supply, is then divided by the remaining unfulfilled supply obligations—that is, the obligations subject to an allocation fraction—to calculate the allocation fraction for that period. Each wholesale purchaser then receives an amount of product equal to its allocation level multiplied by the supplier's allocation fraction.

Under Special Rule No. 1, suppliers will be generally prohibited from delivering product to any purchaser at a fraction of that purchaser's allocation level higher than that designated by the Administrator, even though additional supplies might be available. Thus, if imposed allocation fraction is ordered, "excess product," which is the difference between a supplier's maximum allocable supply under the imposed fraction and its available supply, will result for many suppliers. The special rule will require these amounts to be maintained in a supplier's storage facilities until its maximum storage capability is attained or until it accumulates an amount of product equal to 90 days peak supply to purchasers with respect to whom it has a supply obligation, whichever is less. The definition of "excess product" thus differs greatly from a similar expression—"surplus product"—in Subpart A of Part 211, which is that product remaining when the supplier has met all of its supply obligations and which may be distributed subject only to the limitations of § 211.10(g)(5).

"Maximum storage capability" in the special rule means the maximum volume of product or products that a firm can store using its facilities in place at the time an imposed allocation fraction order is issued under the special rule. Such capability will include, but is not limited to, facilities owned, leased or otherwise available to a firm at the time the order is issued.

In the event that a firm accumulates an amount of excess product which (i) is in excess of the amount of product that firm would use or distribute during any 90-day period of peak usage or (ii) would necessitate that firm making physical additions to storage facilities, the rule provides that such excess product is subject to redirection by the Administrator to a supplier not able to meet its supply obligations even with the imposed allocation fraction. If not thus redirected, the excess product must then be distributed by the supplier to meet the rest of its base period supply obligations, up to the point where it raises the supplier's allocation fraction to 1.0, and then as surplus product under § 211.10(g)(5).

The authority adopted here is designed to be used by the Administrator primarily if shortage conditions are threatened. The imposed allocation fraction under the special rule will not have the effect of reducing supply in total, but will either delay the distribution of available petroleum products, thus making a given supply available over a longer period of time, or, if mandatory allocation fractions are imposed selectively upon only certain products, cause refiners to shift their yields away from products on which the maximum fraction is imposed to others which may be distributed.

Illustrations of the operation of the Special Rule as contrasted with the regulations in Subpart A of Part 211 are given below. For the first example, assume a supplier's available supply of a product for an allocation period is 125 barrels, its obligation not subject to an allocation fraction is 15 barrels and its obligation subject to an allocation fraction is 100 barrels. Under the regulations in Subpart A, without an imposed maximum allocation fraction, the supplier would first distribute the 15 barrels which represent the obligations not subject to an allocation fraction. Then (assuming no product is deliverable into a state set-aside) the supplier would calculate its allocation fraction by dividing the remaining supply (110 barrels) by the obligations subject to an allocation fraction (100 barrels). This fraction would result in an allocation fraction of approximately 1.1.

Next, the supplier would distribute the 100 barrels to satisfy its remaining supply obligations. Each purchaser would receive an amount of product equal to its appropriate allocation requirement set forth in Subparts D through K of Part 211 multiplied by the supplier's allocation fraction. In this case, since the supplier's allocation fraction is greater than 1.0, surplus product of 10 barrels will result. That surplus may then be distributed under the provisions of § 211.10(g)(5).

If, however, the Administrator imposes a mandatory allocation fraction of .90 under the special rule, a different distribution would result. The supplier would as before distribute first the 15 barrels representing obligations not subject to an allocation fraction. Then the supplier's maximum allocable supply would be determined by multiplying the remaining unsatisfied supply obligations by the imposed allocation fraction. In this example, 90 barrels could be distributed, since .90 (imposed allocation fraction)×100 barrels (obligations subject to a fraction)=90 barrels. Each base period purchaser would receive an amount of product equal to 90 percent of its allocation requirement.

The amount of excess product remaining would be the difference between the maximum allocable supply—90 barrels—and the available supply—110 barrels. Therefore, 20 barrels would have to be held as inventory (assuming that storage capacity or 90 days' peak supply have not been exceeded).

For a second example, assume that the same obligations are subject to a fraction and not subject to a fraction as set forth in the first example (100 barrels and 15 barrels, respectively), but that the supplier's available supply, rather than being 125 barrels, is 100 barrels. Under Subpart A regulations with no imposed allocation fraction, the supplier would initially distribute the 15 barrels to purchasers not subject to an allocation fraction. The allocation fraction would then be determined by dividing supply by the remaining obligations to be satisfied. This would produce an allocation fraction of 85/100=.85. The supplier

would thus distribute the remaining 85 barrels under an allocation fraction of .85. No surplus product would result since the fraction is less than 1.0.

If, in this second example, a maximum allocation fraction of .90 were imposed under the special rule, the following allocation would occur: Again, the supplier would first distribute the 15 barrels to purchasers not subject to an allocation fraction, leaving 85 barrels available to be distributed. Then, to determine whether the imposed maximum allocation fraction would prevent the distribution of the supplier's entire available supply, the maximum allocable supply is calculated by multiplying the imposed allocation fraction (.90) by the obligations subject to an allocation fraction (100 barrels) to give 90 barrels. Since the supplier's remaining available supply of 85 barrels would be less than its maximum allocable supply under the imposed fraction, the remaining 85 barrels of the available supply would be distributed under a .85 fraction, a fraction less than the mandated .90 maximum. In this case, the supplier's supply obligation for the particular period will be met by distributing its entire available supply and there will be no excess product to add to inventory. The supplier will not have a further obligation to obtain and distribute product it does not have available, solely to meet a maximum imposed allocation fraction.

Excess product placed in inventory in previous months under an imposed allocation fraction shall, if required by the Administrator under 10 CFR 211.22, be considered as part of a supplier's allocable supply for purposes of determining its allocation fraction (and may be so considered even if not required by the Administrator). Thus, in the second example above, if, in addition to the supplier's 85 barrels of product available in the present month (after distribution to high priority customers), it had available 10 barrels of excess product accumulated in previous months, if so ordered by the Administrator it would be deemed to have an allocable supply of 95 barrels from which an allocation fraction of .95 could be calculated. Because it would be subject to an imposed allocation fraction of .90, however, it would be required to keep 5 barrels of excess product in inventory.

The Special Rule to Part 211 places two notices requirements upon suppliers subject to an imposed allocation fraction ordered by the administrator. The first requires suppliers to notify DOE if the supply obligation under the imposed allocation fraction for each product cannot be met. Such notification will be made within five days of determining that the fraction cannot be met to enable DOE to assess more accurately the availability of product supplies. Notice will also be required to be given of any excess product which has accumulated or will accumulate which exceeds a supplier's maximum storage capability. This notice must be given when storage capabilities are projected to be exceeded, but, in any event, no later than 48 hours before the maximum storage capability will be attained.

Such notifications to DOE may be by telephone or in such other manner to either the DOE National or Regional offices as may be specified by the Administrator.

3. *Updated Base Period.* The allocation scheme provided for under the special rule is the same as that under the existing active or standby petroleum allocation program. However, the Administrator will have the discretion to adopt certain modifications to the present rules that would make the existing program more responsive to a petroleum supply shortage. The most significant possible change to the existing allocation program provides for the establishment of an updated base period to determine base period volumes and supplier/purchaser relationships.

The base period year, necessary to determine the purchasers to which a supplier is obligated to provide product, and the amount of supply obligations, could be changed by the Administrator under the special rule to be the 12-month period ending with the second full month prior to the month in which the Administrator issues an order effectuating the special rule. This period will ordinarily reflect a relatively normal period upon which to base emergency allocations. However, if it does not, the Administrator may establish such other base period as he should consider appropriate, and may provide for a rolling or periodically updated base period. As revised, the "base period" for any product would be either the corresponding month or calendar quarter of the base period year, whichever had been used in the relevant subpart of Part 211 as the length of the base period for that particular product.

Because the special rule can be activated only in part, the Administrator could use the rule to update base periods for presently controlled products without activating any other provisions of the rule. This may be an appropriate response to a situation where a relatively modest shortage of product brings out the distortions and inequities existing in the present base period requirements.

The revised base period year could apply under today's final rule to all products except propane, butane and natural gasoline. The base period year for purposes of allocating these products is currently the subject of a separate rulemaking (42 FR 21242, August 15, 1977), which is now pending before the FERC under section 404 of the Department of Energy Organization Act, and will be determined in the context of that rulemaking.

4. *Adjustments of Base Period Uses for Certain Users of Kerosene-Base Jet Fuel, Middle Distillates and Residual Fuel Oil.* Section 6 of Special Rule No. 1 to Part 211 permits the Administrator to limit the use of kerosene-base jet fuel, middle distillates and residual fuel oil by wholesale purchasers for industrial, electric utility and refinery fuel uses. As was stated in the proposal, this provision could provide a means for encouraging the use of other sources of energy in more abundant supply. It will place industrial, electric utility and refinery fuel users of oil on notice that if they have facilities in place to use available sources of energy other than kerosene-base jet fuel, middle distillates or residual fuel oil, or they could reasonably have been expected to put such facilities in place, the Administrator may reduce their allocation of kerosene-base jet fuel, middle distillates and residual fuel oil when Special Rule No. 1 is ordered into effect. As a concomitant measure to insure that industrial, electric utility and refinery fuel users do not frustrate the purpose of these requirements by acquiring surplus product, the Administrator may also limit the *use* by wholesale purchasers of residual fuel oil, kerosene-base jet fuel or middle distillates to one hundred percent of their base period use, as adjusted under section 6 of the special rule.

The special rule also contains a provision which permits the Administrator to adjust upward a firm's base period use of kerosene-base jet fuel, middle distillates or residual fuel oil if it can demonstrate it previously had a base period use of such product or products; had switched to another source of energy in adequate supply and therefore was not using, or was using decreased volumes of, the original products in a period subsequently designated as a base period; and, finally, the new source of energy to which the firm switched is no longer in adequate supply.

To be consistent with the Administrator's authority to adjust the base period use of electric utilities in order to maximize switching to alternate fuels, in § 211.125 we have removed the floor below which the base period use of an electric utility could not heretofore be adjusted. Further, in §§ 211.125(c) and 211.163(b)(2), we have conformed the criteria for allocations of middle distillates and residual fuel oil to electric utilities to reflect our intentions.

5. *Other Amendments to Part 211.* The other specific amendments to Part 211 that are adopted by Special Rule No. 1 are the same as proposed in the July notice. The reasons for these changes appear in that notice. Although some comments were received on the various allocation levels presented in Special Rule No. 1, the majority appeared to find the proposed levels satisfactory. Consequently, those levels are adopted as part of this final rule. Further comments are specifically requested, however, on appropriate allocation levels and whether imposed maximum allocation fractions should be extended to those uses which are not subject to an allocation fraction.

The mechanism for downward adjustment of base period use in § 211.13(e), as revised specifically provides that ERA may order downward adjustment of base period volumes whenever purchasers' needs have declined. This change will help insure that base period allocation entitlements reflect purchasers' actual requirements. In § 211.10(g)(5), the waiting time that a supplier must wait (unless otherwise notified by ERA) before distributing surplus after reporting to ERA will be reduced from ten days to five days.

Conforming technical changes have also been made to update the program and to reflect the establishment of the Department of Energy.

B. SPECIAL RULE NO. 1 TO PART 210

Special Rule No. 1 to Part 210, the General Allocation and Price rules, provides that § 210.35, which sets forth products that are exempt from the Mandatory Petroleum Allocation and Price Regulations, will be superseded and made inoperative to the extent and for the duration the Mandatory Petroleum Allocation and Price Regulations are reimposed upon any exempt product.

This special rule also contains a sunset provision which provides that, unless otherwise ordered by the ERA Administrator, the reimposition of the Mandatory Petroleum Allocation or Price Regulations upon a previously exempt product shall be for a period ending not later than the last day of the third full calendar month after controls are reimposed. It also states that Special Rules No. 1 to Part 211 and Part 212 may not be in effect as to either a previously exempt or previously controlled product for a period ending not later than the last day of the third full calendar month after the special rules became effective, unless otherwise ordered by the Administrator. If the Administrator decides to waive the sunset provisions of these rules, the rules may continue in effect only for three additional calendar months, unless the Administrator establishes a different time for their termination or again waives the sunset provision at the end of three months. Expiration of the special rules as applied to a product already subject to controls shall result in a reversion back to the prior controls.

C. SPECIAL RULE NO 1 TO PART 212

The product pricing provisions adopted today are set forth in Special Rule No. 1 to Part 212. The provisions in the special rule are similar but not identical to those in the current price regulations. When any or all of the provisions of this special rule are ordered into effect by the Administrator, the DOE, shall, in the provisions ordered into effect, set forth in greater detail the specifics of this special rule, and, if necessary, issue instructions with respect to the operation of this special rule.

The Administrator of ERA shall determine which products are subject to this special rule and at which levels of distribution it shall apply. The products subject, generally, to the special price provisions are defined as "specified products" in the special rule. The Administrator may order the special rule into effect at any or all levels of distribution, including refiner, wholesaler and retailer tiers or for full or self-service sales.

Before the Administrator could designate as a specified product any product exempt from the price regulations, the exemption for such product would first have to be removed. Products upon which controls have been reimposed, but which are not specified under the Special Rule, will be priced in accordance with the present provisions of Part 212 and, to the limited degree the Special Rule is applicable to covered products but not specified products, under the Special Rule.

1. *Refiner Price Rule.* Refiners shall calculate the maximum lawful selling price for specified products using the price formula currently set forth in Subpart E to Part 212 with certain modifications. Each specified product will be treated as a separate product category (of the type "i" under the refiner price formula) and the total dollar amount of cost increases attributable to the specified product will be allocated to that particular specified product to be recovered in sales of that specified product.

The current regulations permit refiners certain flexibility in determining on which products in the general refinery product category increased costs will be recouped and in reallocating increased costs between products. For example, if it were not exempt, under the current regulations residual fuel oil would be considered a general refinery product for purposes of determining maximum lawful selling prices. That category also includes lubricants, specialty oils and a variety of other products. A refiner determines what portion, if any, of the increased costs allocated to the general refinery product category will be passed through in price increases on the various products in the general refinery product category. Accordingly, a refiner would be permitted to recoup any or all of the costs increases attributable to general refinery products on residual fuel oil. Furthermore, increased costs allocated to the general refinery product category may be reallocated to gasoline thus permitting refiners an additional pricing flexibility.

This special rule modifies refiners' pricing flexibility. First, specified products will only have cost increases attributable to the specified product allocated to such product. Second, when a product is determined by the Administrator to be a specified product—*i.e.*, a product subject to this special rule and thus a separate category for purposes of the refiner price formula—no increased costs shall be reallocated to the product from other product categories. In other words, increased costs which may be recouped on a specified product are calculated in the same manner as increased costs for a product category "i" under the current rules. Thus, only the increased costs directly attributable to specified products shall be reflected in the maximum lawful selling price of these products and no increased costs attributable to other product categories shall be reallocated to the specified products.

For example, assume the Administrator determines that regular grade unleaded gasoline and residual fuel oil are specified products subject to this special rule. Cost increases which may be recouped on each of these products would be calculated by treating each product as a separate product category. In such a situation, the general refinery products category would not include residual fuel oil and the product category for gasoline would not include regular unleaded gasoline. Only increased costs attributable to regular grade unleaded gasoline and residual fuel oil could be recouped, respectively, on each of these products. Furthermore, increased costs initially allocated to residual fuel oil may not be reallocated to those products continued to be included in the general refinery products category except as directed by the Administrator. However, increased costs initially allocated to regular unleaded gasoline and residual fuel oil may be reallocated to any products remaining in the product category of gasoline which would continue to include all the grades of gaso-

line other than those designated as specified products.

Thus under this special rule, if prices for unleaded gasoline were to attain levels that were inequitable or which began to cause other adverse impacts, the Administrator could designate unleaded gasoline as a specified product. This designation would require its maximum lawful selling price to be computed separately, thus preventing the reallocation to unleaded gasoline of unrecovered increased costs reallocable to the product category of gasoline or unrecovered increased costs allocated to the other grades of gasoline.

Unrecouped increased costs for specified products incurred after this rule is ordered into effect may be carried forward or banked for later recovery. However, unrecouped costs in "banks" for specified products created prior to the day this special rule is made effective shall not be recouped on any specified product during the period this special rule is in effect. In addition, the Administrator may adjust or eliminate the "bank" created prior to the date the special rule is made effective for any covered but not specified product (a product which remains subject to the current rules) while the rule is in effect.

The rule also states that if the Administrator orders a type or grade of gasoline to be a specified product, the Administrator may adjust the base date selling price for that type or grade of gasoline or for the gasoline product category. To the extent the Administrator increases the base date selling price of any product under this provision, increased costs must be reduced in an equal total dollar amount on another product or products as determined by the Administrator. This provides the Administrator with a means, for instance, of controlling refiners' price differentials between leaded and unleaded gasoline on a basis more current than the one cent imputed price difference set forth in § 212.112(b). Additionally, the Administrator may adjust for each covered or specified product the base date and base period to a more recent date than May 15, 1973 and more recent month than May 1973, respectively, for the purpose of calculating maximum lawful selling prices.

2. *Reseller Price Rule.* Resellers and retailers will price product in a manner similar to the current pricing scheme with two major modifications: (1) The class of purchaser rule in the current regulations is changed substantially and (2) the amount of allowable non-product cost increases will be determined by the Administrator.

First, except for end-users, the base price to customers will be the price charged in the last sale to the customer during the 30 days immediately preceding the date the special rule is ordered into effect or as directed by the Administrator. Accordingly, the base price will reflect current market conditions. The base price to end-users will be determined using prices charged to members of the class of purchaser.

Customers other than end users, which did not purchase a specified product during the base period, will be assigned by the seller to the most suitable class of purchaser. The base price will be the weighted average price charged on the most recent day during the base period in sales of the specified product to customers in the most suitable class of purchaser. For example, assume Customers A, B, and C each bought one gallon of a specified product at a price of 50¢, 60¢, and 70¢ on September 1, 1979, September 15, 1979 and October 2, 1979 respectively. Further assume that this special rule was ordered into effect and the Administrator set the base date as October 5, 1979. The base price to customers B and C would be 60¢ and 70¢ per gallon respectively. Because Customer A did not purchase within 30 days of the base date, the base price would be the average weighted price of all the customers in the same class of purchaser as Customer A on the most recent date a sale was made to that class. Assuming Customers A, B, and C are in the same class of purchaser as defined in Part 212, then Customer A's base price would be 70¢ per gallon for the specified product. This base price is computed by averaging the price charged in sales to Customer C, the only member of the class of purchaser to whom a sale was made on the most recent day during the base period on which sales were made to the class of purchaser. As a further example with respect to the calculation of the base price for Customer A, assume that Customer D, a member of the same class of purchaser as Customers A, B, and C, purchased one gallon of the specified product on October 2, 1979 at 76¢ per gallon. The base price to Customer A would be 73¢ per gallon—*i.e.* the weighted average price to Customers C and D on October 2. The price charged to Customer B would not be included in the computation of Customer A's base price because it did not occur on the most recent date during the base period on which sales were made to the class.

Whenever a seller (except a seller to end-users) places a new purchaser in a class of purchaser for purposes of determining the appropriate base date price for that purchaser, the seller must maintain records which clearly and specifically indicate the criteria which were applied in determining the appropriate class of purchaser. Further, (except for end-users) a seller must notify the buyer in writing, at the time of the first sale to the buyer, of the class of purchaser, the weighted average of the lawful prices in the most recent base period sales to members of that class and the criteria used in determining which purchasers were in that class.

When this special rule is made effective, the nonproduct cost increases permitted by the current rules (ordinarily expressed in a maximum number of cents per gallon for all sellers) will be superseded by a provision which permits the Administrator to determine the amount of price increases that will be permitted to reflect increased marketing costs. This provision will allow the Administrator to make an immediate adjustment in allowable nonproduct cost increases to reflect increases in such costs since the last adjustment was made.

## IV. Additional Comments Requested

We recognize that the special rules adopted today could have significant impact on certain firms in the event they are made effective. Although the special rules are standby rules subject to being ordered into effect immediately, they may not be activated until a future date. Thus, there may be an opportunity to make additional improvements in these regulations prior to the time they are needed, and it is our intention to review these regulations continuously for this purpose prior to their activation.

In this regard, the DOE may conduct additional tests of the emergency supply interruption systems. These tests could demonstrate the need for amendments to these special rules and, if so, the changes will be made in the appropriate manner. In addition, we are soliciting further written comments, through March 16, 1979, on all aspects of these special rules, and particularly those provisions that represent significant modifications of the proposal, and are continuing this rulemaking proceeding for the purpose of making any further amendments that may be appropriate in light of the comments received. It is also our intention to request comments on these regulations at other appropriate intervals in the future, and we specifically request suggestions from the public as to whether we should establish a routine procedure for receiving public comments on these regulations and, if so, how often comments should be solicited.

Comments should be submitted to the address indicated in the "Address" section of this preamble and should be identified on the outside envelope with the designation "Standby Product Allocation and Price Regulations" and the docket number. Fifteen copies should be submitted. All comments re-

ceived by the ERA will be available for public inspection in the ERA Office of Public Information, Room B-110, 2000 M Street, NW., Washington, D.C. between the hours of 8:00 a.m. and 4:30 p.m., Monday through Friday.

You should identify any information or data considered by you to be confidential and submit it in writing, one copy only. We reserve the right to determine the confidential status of the information or data and to treat it according to our determination.

In accord with section 404 of the DOE Organization Act, the Federal Energy Regulatory Commission received a copy of the proposed rulemaking and has notified ERA that it has not determined that the proposed regulations would significantly affect any function within its jurisdiction under sections 402(a)(1), (b), and (c)(1) of the DOE Act.

The amendments issued today are adopted immediately in standby status. If any of their provisions are ordered into effect by the ERA Administrator within thirty days of publication, such action will be taken in accordance with the requirement set forth at 5 U.S.C. section 553(d).

(Emergency Petroleum Allocation Act of 1973, Pub. L. 93-159, as amended, Pub. L. 93-511, Pub. L. 94-99, Pub. L. 94-133, Pub. L. 94-163, and Pub. L. 94-385; Federal Energy Administration Act of 1974, Pub. L. 93-275, as amended, Pub. L. 94-385 and Pub. L. 95-91; Energy Policy and Conservation Act, Pub. L. 94-163, as amended, Pub. L. 94-385; E.O. 11790, 39 FR 23185; Department of Energy Organization Act, Pub. L. 95-91; E.O. 12009, 42 FR 46267; Powerplant and Industrial Fuel Use Act of 1978, Pub. L. 95-620)

In consideration of the foregoing, Parts 210, 211 and 212 of Chapter II of Title 10 of the Code of Federal Regulations are amended, as set forth below, on the day of issuance.

Issued in Washington, D.C., on January 12, 1979.

DAVID J. BARDIN,
*Administrator,*
*Economic Regulatory Administration.*

## PART 210—GENERAL ALLOCATION AND PRICE RULES

1. Part 210 is amended by adding Special Rule No. 1 as an appendix to read as follows:

APPENDIX—SPECIAL RULE NO. 1

STANDBY PRODUCT PRICE AND ALLOCATION REGULATIONS

1. To the extent and for the duration the Mandatory Petroleum Allocation and Price Regulations are reimposed upon any exempt product, this Special Rule supersedes and renders inoperative the relevant portions of § 210.35.

2. Unless otherwise ordered by the ERA Administrator,

(a) the reimposition of the Mandatory Petroleum Allocation or Price Regulations upon any exempt product shall be for a period ending not later than the last day of the third full calendar month following reimposition or such other period as the Administrator shall determine, and

(b) Special Rules No. 1 to Part 211 and Part 212 of this chapter shall remain in effect as to either a previously exempt or a previously controlled product for a period ending not later than the last day of the third full calendar month following the date they are made effective or such other period as the Administrator shall determine.

## PART 211—MANDATORY PETROLEUM ALLOCATION REGULATIONS

2. Part 211 is amended by adding Special Rule No. 1 as an appendix at the end thereof to read as follows:

APPENDIX—SPECIAL RULE NO. 1

STANDBY PRODUCT ALLOCATION REGULATIONS

1. *Purpose.* The provisions of this special rule shall be ordered into effect if necessary to attain the objectives of section 4(b)(1) of the Emergency Petroleum Allocation Act of 1973, as amended.

2. *Scope.* This special rule applies to any firm engaged in the production, distribution or consumption of refined petroleum products and residual fuel oil produced or imported into the United States. This special rule may be ordered into effect with respect to any product subject to the provisions of Part 211 and, to the extent the Mandatory Petroleum Allocation Regulations are reimposed on any product previously exempted, this rule may be made effective as to such product. During the time period this special rule is in effect it supersedes any inconsistent provision of this part.

3. *Applicability.* Unless the Secretary of Energy shall determine otherwise, the provisions of this special rule shall take effect, and remain in effect, if the international crude oil allocation provisions of the International Energy Agreement take effect. Any or all of the provisions of this special rule may also be ordered into effect at any time by the Administrator of the Economic Regulatory Administration ("the Administrator"). The Administrator may apply the provisions of this rule on either a national or regional basis upon any category of refined petroleum product or products and residual fuel oil, and with respect to any class of persons or class of transactions.

4. *Definitions.* For the purposes of this special rule:

"Excess product" means the volume of available supply for a base period which results after (1) a supplier has met all of its base period obligations for those end uses not subject to an allocation fraction and (2) has applied an imposed allocation fraction to the remainder of its supply obligations.

"Imposed allocation fraction" means the maximum proportion of a supplier's total adjusted base period supply obligations for all purchasers subject to an allocation fraction (as calculated in § 211.10(b)(2) for any refined product or products) that a supplier is permitted to supply pursuant to an order issued by the Administrator under this Special Rule.

"Maximum storage capability" means the maximum volume of product or products that a firm can store using its facilities in place at the time an order is issued. Such capability shall include, but is not limited to, facilities owned, leased or otherwise available to a firm.

5. *Imposed Allocation fractions.* (a) When the provisions of this special rule take effect, the Administrator may, by order, impose maximum allocation fractions.

(b) Suppliers shall not supply any amounts of product in excess of those amounts permitted under the order issued by the Administrator. To the extent that a supplier does not have enough supply to meet the imposed allocation fraction, there is no requirement to obtain additional product and lesser allocation fractions may be declared as calculated in §211.10(b).

(c) If the supply obligation under the maximum imposed allocation fraction for each product subject to this special rule cannot be met, suppliers subject to an order issued by the Administrator shall notify ERA within five days of making that determination. Such notification shall be made to the DOE national office unless otherwise specified by the Administrator.

(d) Each supplier subject to an order issued under this Special Rule shall (i) hold all excess product in storage up to the amount of product such firms would use or distribute during any 90-day period of peak usage and (ii) report to ERA any excess product which has accumulated or will accumulate in excess of its maximum storage capability. Nothing in this paragraph shall be construed as requiring any firm to make physical additions to storage facilities in order to comply with this rule.

(e) In the event that a firm accumulates an amount of excess product which is the lesser of (i) the amount of product that firm would use or distribute during any 90-day period of peak usuage or (ii) the total available capacity of that firm's storage facilities, then, subject to redirection by the Administrator, such excess product may be distributed first to meet the rest of its base period supply obligations and then as surplus product under § 211.10(g)(5).

(f) As ordered by the Administrator, for each base period suppliers shall notify ERA of the volume of excess product when storage capabilities are projected to be exceeded, and, in any event, no later than 48 hours before the maximum storage capability will be attained.

(g) Notification to ERA by suppliers shall be by telephone or any other manner specified by the Administrator to the ERA National office.

6. *Adjustments and Use Limitations for Kerosene-Base Jet Fuel, Middle Distillates and Residual Fuel Oil.* When the provision of this special rule are in effect as to either kerosene-base jet fuel, middle distillates or residual fuel oil, the Administrator may, by general or special order:

(a) Adjust downward a wholesale purchaser's base period use of kerosene-base jet fuel, middle distillates or residual fuel oil which is used for industrial, electric utility, or refinery fuel use: *Provided,* That (i) the wholesale purchaser has in place, or could reasonably have been expected to have put in place, the facilities and the capability to use instead another source of energy and (ii) the other source of energy is available to it;

(b) Impose limitations on the use by wholesale purchaser-consumers of kerosene-base jet fuel, middle distillates and residual

fuel oil for industrial, electric utility and refinery fuel use in excess of one hundred percent of their base period use, as adjusted pursuant to paragraph (a) of this section; and

(c) Adjust upward the base period use of kerosene-base jet fuel, middle distillates or residual fuel oil for a firm which demonstrates it (1) had a previous base period use of such product or products; (2) had switched to another source of energy in adequate supply and was therefore not using, or using decreased amounts of, kerosene-base jet fuel, middle distillates or residual fuel oil during a period subsequently designated as a base period; and (3) the source of energy to which the firm switched is no longer in adequate supply.

7. *Proposed Amendments to Part 211.* When the provisions of this special rule are in effect, the Administrator may order the following amendments to supersede or modify as set forth herein the following sections of this part:

(a) Section 211.2 may be amended by designating the present section as paragraph (a) and by adding a new paragraph (b) to read as follows:

§ 211.2 *Relationship of subparts.*

(a) Unless otherwise specified in Subparts D through K of this part, the general provisions set forth in this subpart apply to the mandatory allocation of all allocated products.

(b) Where inconsistent with the provisions of this part, Special Rule No. 1 to this part shall take precedence.

(b) Section 211.9 may be amended by revising paragraphs (a) and (b) to read as follows:

§ 211.9 *Supplier/purchaser relationships.*

(a) *Supplier/wholesale purchaser relationship.* (1) Each supplier of an allocated product shall supply all wholesale purchaser-resellers and all wholesale purchaser-consumers which purchased or obtained that allocated product from that supplier during the base period as specified in Subparts D through K of this part and Special Rule No. 1 to this part.

* * * * *

(b) *Supplier/end-user relationship.* Each supplier of an allocated product shall, to the maximum extent practicable, supply as of the date specified by the Administrator, all end-users which purchased that allocated product from that supplier during the base period or the interim period between the end of the base period and the effective date of these provisions and which are entitled to an allocation level under the provisions of Subparts D through K of this part.

(c) Section 211.10 may be amended as follows: Paragraphs (a) and (e) are revised, paragraph (f), subparagraph (3) is deleted and paragraph (g), subparagraphs (1) and (5) are revised.

§ 211.10 *Suppliers' method of allocation.*

(a) *General.* (1) Suppliers of allocated products shall allocate all their allocable supply in accordance with the provisions of this section unless otherwise specified in Subparts D through K of this part or in Special Rule No. 1 of this part. Each supplier shall determine its allocation fraction pursuant to the provisions of paragraph (b) of this section. Suppliers shall then allocate to wholesale purchasers and end-users in accordance with the provisions of paragraph (c) of this section. Suppliers of end-users without allocation levels shall allocate their allocable supply in accordance with the provisions of paragraph (d) of this section. The method of allocation for new suppliers is specified in paragraph (e) of this section. Suppliers with allocation fractions less than one (1.0) must act in accordance with the provisions of paragraph (f) of this section, while suppliers with allocation fractions in excess of one (1.0) must act in accordance with the provisions of paragraph (g) of this section. Suppliers which sell products with different uses which are subject to allocation under more than one subpart shall determine the applicable subpart by reference to paragraph (h) of this section.

* * * * *

(e) *New supplier.* (1) A supplier which was not a base period supplier but was a supplier during the interim period after the end of the base period but before the date specified by the Administrator under Special Rule No. 1 to this part, shall supply, in accordance with the provisions of this section, (i) wholesale purchasers which it supplied as of a date specified by the Administrator and which have no base period supplier; (ii) any assigned purchasers; (iii) new wholesale purchasers acquired during the interim period described in this paragraph (e)(1) in accordance with the provisions of § 211.12; and (iv) to the maximum extent possible, end-users.

(2) A supplier which was not a supplier prior to the date specified by the Administrator under Special Rule No. 1 to this part shall be considered to have no supply obligation and shall not allocate supplies to any purchaser without ERA approval.

(f) *Allocation fractions less than one.* * * *

(3) [Deleted]

* * * * *

(g) *Allocation fractions greater than one*—(1) *General.* Unless otherwise directed by the ERA, in allocating allocable supplies of any allocated product among wholesale purchasers and end-users, no supplier may use an allocation fraction greater than one (1.0) except as provided herein. Propane and butane imported and distributed by suppliers pursuant to § 211.12(g) shall be subject only to the provisions of paragraph (g)(8), of this section.

* * * * *

(5) *Distribution of surplus product.* Any supplier subject to subparagraph (2) or any supplier which reports pursuant to subparagraph (3) of this paragraph and which is not notified to the contrary within five (5) days of receipt by ERA of the supplier's notification under subparagraph (3) of this paragraph, may distribute its surplus product at its discretion except that (i) the supplier shall offer, to each purchaser a volume based on the aggregate pro-rata volume supplied during the base period in the category of (A) wholesale purchaser-resellers which are entitled to receive an allocation from that supplier and which are branded independent marketers, to the extent that such category of purchaser is willing to accept it, at least the same proportion of the supplier's surplus product as the total base period volumes (prior to any adjustments) of branded independent marketers which are entitled to receive an allocation from that supplier bear to the total base period volumes (prior to any adjustments) of all purchasers, including those assigned by ERA, which are entitled to receive an allocation from that supplier; and (B) wholesale purchaser-resellers which are entitled to receive an allocation from that supplier and which are non-branded independent marketers, to the extent that such category of purchasers is willing to accept it, at least the same proportion of the supplier's surplus product as the total base period volumes (prior to any adjustments) of non-branded independent marketers which are entitled to receive an allocation from that supplier bear to the total base period volumes (prior to any adjustments) of all purchasers including those assigned by ERA, which are entitled to receive an allocation from that supplier; and (ii) the supplier may not supply to retail sales outlets owned and operated by the supplier, in the aggregate, a greater proportion of the supplier's surplus product than the total base period volumes (prior to any adjustments) of all such retail sales outlets bear to the total base period volumes (prior to any adjustments) of all purchasers, including those assigned by ERA, which are entitled to receive an allocation from that supplier unless the supplier first offers surplus product to and meets all requests for surplus product from all independent marketers which are entitled to receive an allocation from that supplier to the extent required in clause (i) of this subparagraph. *Provided,* That a supplier shall not be required to offer surplus product available for distribution during a period corresponding to a base period to any purchaser which has refused to lift all of its allocation entitlement in that same period corresponding to a base period.

* * * * *

(d) Section 211.12 may be amended as follows: Paragraph (c), paragraph (e), subparagraph (2)(i), and paragraph (g) are revised and paragraph (h), subparagraphs (5) and (6) are deleted.

§ 211.12 *Purchasers allocation entitlement.*

* * * * *

(c) *Base period volume determination.* (1) Within fifteen (15) days after the date specified by the Administrator under Special Rule No. 1 to this part, each supplier which sells an allocated product to a wholesale purchaser or end-user entitled to an allocation level which is a percentage of a base period use shall report to each of those purchasers with respect to each allocated product, the volume of product which it sold to or transferred to that purchaser in each base period.

* * * * *

(3) If the supplier and purchaser are unable to resolve their differences, the supplier shall commence allocation based on the supplier's records, in accordance with the allocation provisions in this part, and the purchaser shall make application to the appropriate ERA office for a corrected base period volume in accordance with ERA forms and instructions. Copies of the purchaser's records for base period purchases should be included with the application.

(4) If the ERA determines that the purchaser's application for a corrected base period volume is valid it may order the supplier to adjust the purchaser's base period and to supply the purchaser with additional volumes of the allocated product equal to the adjusted amount the purchaser should have received if allocation had initially been based on the corrected base period volume.

* * * * *

(e) *New wholesale purchasers.* * * *

(2) *New wholesale purchaser-resellers.* (i) Suppliers which have accepted as new purchasers wholesale purchaser-resellers after the end of the base period but prior to the date specified by the Administrator under Special Rule No. 1 to this part, shall notify ERA of the names of all such new purchasers, the proposed base period volume for each purchaser and the basis upon which the proposed base period volume was determined. Such notification shall be received by ERA within fifteen (15) days of the date specified by the Administrator. The proposed base period volume is subject to adjustment by ERA. ERA may also assign the wholesale purchaser-reseller to another supplier. Suppliers may provide interim supplies to such wholesale purchaser-resellers pending ERA assignment of a supplier and a base period volume.

* * * * *

(g) *Importers.* * * *

(2) *Supplier importers of propane and butane.* * * *

(vi) Products that are imported under paragraph (g) of this section shall be subject to orders issued under Special Rule No. 1 to this part.

(h) *Curtailment of certain energy sources pursuant to Federal or State rule or order.* * * *

(5) [Deleted]

(6) [Deleted]

(e) Section 211.13 may be amended by revising paragraph (a), deleting paragraph (b), relettering the remaining paragraphs and revising paragraph (e), the relettered paragraph (f), to read as follows:

§ 211.13 *Adjustments to base period volume.*

(a) *Scope.* * * *

(2) Paragraph (b) of this section provides for adjustments to a wholesale purchaser-reseller's entitlements of purchasers which are occasioned by new assignments to supply wholesale purchasers, or adjustments granted its purchasers pursuant to § 211.12(h), § 211.13(e), § 211.125(b) or § 211.145(b) of this part. Paragraph (c) of this section provides an adjustment to base period use when increased requirements are certified by end-users and wholesale purchaser-consumers entitled to receive an allocation level based upon their current requirements.

* * * * *

(b) *Adjustments to a wholesale purchaser-reseller's base period for new and increased allocation entitlements of purchasers.* * * *

(c) *Adjustments for increased current requirements.* * * *

(d) *Additional Adjustments.* * * *

(e) *Certifications and downward adjustments of base period uses.* (1) The chief executive officer (or his authorized agent) of a purchaser applying to a supplier for an adjustment under this section shall certify such application for accuracy. Such allocation shall contain a statement that increased allocation shall be used only for the purpose stated in the application, shall not be diverted for other uses; and that if its needs decline, the purchaser shall file an amended application to ERA for a downward adjustment to its base period use.

(2) Each supplier shall report to the appropriate ERA Regional Office when (A) any one of its base period purchasers purchases less than 80% of its base period entitlements during each of two consecutive months or quarters corresponding to the relevant base period; (B) these purchases of volumes less than base period entitlements indicate a decline in the purchaser's needs and (C) the supplier has not been notified of a downward adjustment to its purchaser's base period volume.

(3) ERA may order a downward adjustment to a purchaser's base period volumes and the respective supplier's obligations whenever ERA determine that a decline in the purchaser's needs has occured.

* * * * *

(f) *Non-discrimination among wholesale purchasers.* * * *

(f) Section 211.17 may be amended by revising paragraphs (c) and (f) to read as follows:

§ 211.17 *State set-aside.*

* * * * *

(c) *State representative.* Each supplier shall designate a representative within each State in which the supplier is a prime supplier to act for and on behalf of the prime supplier with respect to State set-aside petitions ans assignments from the State set-aside to be supplied by that prime supplier. As to products not previously exempt from this part, each prime supplier for a State shall maintain its designated representative for that State. For those products upon which Mandatory Petroleum Allocation regulations are reimposed, each prime supplier for a State shall designate its representative for that State and shall notify in writing the appropriate State office of such designation within fifteen (15) days of a date specified by the Administrator under Special Rule No. 1 to this part. The designated representative for a State shall be a firm which maintains a place of business within the State. The State office shall to the maximum extent possible consult with a prime supplier's representative prior to issuing any authorizing document affecting State set-aside volumes to be provided by the prime supplier.

* * * * *

(f) *Supplier's responsibilities.* Suppliers shall provide the assigned amount of an allocated product to an applicant when presented with an authorizing document. The authorizing document shall entitle the applicant to receive product from any convenient local distributor of the prime supplier from which the State set-aside assignment has been made which is readily accessible to the applicant. Wholesale purchaser-resellers of prime suppliers shall, as non-prime suppliers, honor such authorizing documents upon presentation, and shall not delay deliveries required by the authorization document while confirming such deliveries with the prime supplier. Any non-prime supplier which provides an allocated product pursuant to an authorizing document shall in turn receive from its supplier an equivalent volume of the allocated product which shall not be considered part of its allocation entitlement otherwise authorized by this part.

(g) Section 211.26 may be amended by revising subparagraph (b) to read as follows:

§ 211.26 *Department of Defense allocations.*

* * * * *

(b) The Department of Defense shall report to the Department of Energy on a semi-annual basis a bulk product purchase program, and, or an annual basis, the purchase program needed in support of the "Posts, Camps; and Stations", "Into-Plane Refueling" (at commercial-civil airports), "Marine Bunkers", "Lubes, Greases and Specialty Products," and "Federal Civil agencies" programs. These programs shall take effect only following the approval of the President. Whenever necessary to assure that the Department of Defense is fully supplied with its current requirements, the Administrator of the ERA shall assign to suppliers the volumes of crude oil and allocated products to be allocated to the Department of Defense.

* * * * *

(h) Section 211.102 may be amended by revising the definition of "base period" to read as follows:

§ 211.102 *Definitions.*

For purposes of this subpart—

"Base period" means the month corresponding to the current month in the 12-month period ending with the second full month prior to the month in which the Administrator issues an order effectuating the Special Rule, or such other 12-month period as the Administrator should consider appropriate.

* * * * *

(i) Section 211.105 may be amended by revising paragraphs (b) and (c) to read as follows:

§ 211.105 *Supplier/purchaser relationships.*

* * * * *

(b) Notwithstanding the provisions of Subpart A of this part, any wholesale purchaser-reseller of motor gasoline which is a branded independent marketer and which during the base period has two or more base period suppliers, shall have designated as its base period supplier that supplier which is its supplier on the date the provisions of Special Rule No. 1 take effect as ordered by the Administrator. This supplier shall be maintained for all periods corresponding to base periods commencing after the provisions of Special Rule No. 1 take effect. This designation shall be for the duration of the Mandatory Allocation Program unless otherwise ordered by ERA pursuant to Part 205 of this chapter.

(c) A wholesale purchaser-reseller which has a base period supplier designated pursuant to paragraph (b) of this section shall provide, within thirty (30) days of the date

specified by the Administrator pursuant to paragraph (b) of this section, written notice of this designation and of the termination of the supply obligations of other suppliers to any supplier(s) which supplied the wholesale-purchaser reseller during base period. Such wholesale purchaser-reseller shall also provide written notice to the designated supplier of the amount of the wholesale purchaser-reseller's base period use which was formerly supplied by the terminated base period supplier(s) and which is to be supplied by the designated supplier. The notice of the designated supplier shall include the names and addresses of the terminated base period suppliers and of the wholesale purchaser-reseller and the location of any facility, including any retail sales outlet concerned.

* * * * *

(j) Section 211.106 may be amended as follows: Paragraph (b), subparagraph (4) is revised and paragraph (c), subparagraph (2)(i) is revised and subparagraph (2)(ii) is deleted.

§ 211.106 *Retail sales outlets.*

* * * * *

(b) *Retail sales outlets as a firm.* * * *

(4) To the extent that retail sales outlets have not been considered separate firms and therefore separate wholesale purchaser-resellers in the base period volume determination required under § 211.12(c), an operator of more than one retail sales outlet shall, not later than 20 days after the date specified by the Administrator, determine the base period volume of each of its retail sales outlets.

(c) *Loss of allocation entitlement for going out of business.* * * *

(2)(i) *Closing of retail outlets.* An entity which operates more than one retail sales outlet and which intends to go or goes out of business at one or more such retail sales outlets may apply to ERA for an adjustment to the base period volumes of its retail sales outlets which will remain in business. ERA may allow such adjustments to the extent that the vacating of business at a particular retail sales outlet does not result in an inequitable distribution of motor gasoline in the market areas served by the entity and that such an adjustment would not otherwise be inconsistent with the objectives of the allocation program. Pending ERA action on an application, ERA may provide adjustments to the base period volume of the pertinent retail sales outlets, which will remain in business.

* * * * *

(2)(ii) [Deleted]

(k) Section 211.122 may be amended by revising the definition of "base period" to read as follows:

§ 211.122 *Definitions.*

For the purposes of this subpart—

"Base Period" means the month corresponding to the current month in the 12-month period ending with the second full month prior to the month in which the Administrator issues an order effectuating the Special Rule, or such other 12-month period as the Administrator should consider appropriate.

* * * * *

(l) Section 211.123 may be amended by revising paragraph (c), subparagraphs (2) and (3) to read as follows:

§ 211.123 *Allocation levels.*

* * * * *

(c) *Allocation levels subject to an allocation fraction.* * * *

(2) One hundred ten (110) percent of base period use (as reduced by application of an allocation fraction) for residential space heating.

(3) One hundred (100) percent of base period use (as reduced by application of an allocation fraction) for the following uses:

(i) Synthetic natural gas plant feedstock use;

(ii) Electric utilities;

(iii) Industrial space heating uses; and

(iv) All other non-space heating uses.

(m) Section 211.125 may be amended by revising paragraph (c) to read as follows:

§ 211.125 *Supplier/purchaser relationships and adjustments to base period use for electric utilities.*

* * * * *

(c) The ERA may at any time adjust the base period use of an electric utility. The FEA shall notify the utility and the affected supplier of any such adjustment. In making such an adjustment, the ERA may consider, but is not limited to the following:

(1) The addition or phasing out of generating units;

(2) Ability, within appropriate groupings, to absorb equal percentage cutback in middle distillate supply;

(3) Ability to utilize non-oil based energy;

(4) System reserve capacity;

(5) Available energy from imports;

(6) Minimum level of consumption, which cannot be supplied by non-oil fired generation; and

(7) Middle distillate inventory held by a utility.

(n) Section 211.142 may be amended by revising the definitions of "base period," "base period supplier" and "base period volume" and inserting a definition of "mail transport flying" in alphabetical order to read as follows:

§ 211.142 *Definitions.*

For purposes of this subpart—

* * * * *

"Base period" means the calendar quarter corresponding to the current calendar quarter, of the 12-month period ending with the second full month prior to the month in which the Administrator issues an order effectuating the Special Rule, or such other 12-month period as the Administrator should consider appropriate.

"Base period supplier" means a base period supplier as set forth in Subpart A of this part or as designated by the ERA, and includes in the case of an international air carrier its suppier during the base period of bonded or non-bonded fuel.

"Base period volume" means base period volume as defined in § 211.51 and § 211.10(b)(2)(ii), and includes in the case of an international air carrier, the volume of bonded and non-bonded aviation fuels purchased during a base period.

"Mail transport flying" means use of aircraft operating under 14 CFR Parts 121 and 135 in transporting mail under contract with the United States Postal Service, including use of aircraft in transporting such mail by "other air carriers" as defined in this § 211.142.

* * * * *

(o) Section 211.143 paragraph (c) may be amended by revising subparagraphs (1) and (2) to read as follows:

§ 211.143 *Allocation levels.*

* * * * *

(c) *Allocation levels subject to an allocation fraction.* (1) One hundred percent of current requirements (as reduced by application of an allocation fraction) for the following uses:

(i) Emergency aviation services; safety and mercy missions;

(ii) Energy production flying; and

(iii) Telecommunications flying.

(2) One hundred (100) percent of base period use (as reduced by application of an allocation fraction) for the following uses:

(i) Aircraft manufacturing;

(ii) Business flying, including requirements for crew training and proficiency flying;

(iii) Domestic, supplemental, and scheduled cargo air carriers, including requirements for crew training and proficiency flying;

(iv) International air carriers, including requirements for crew training and proficiency flying—the total of both bonded and non-bonded fuels;

(v) Intrastate carriers, including requirements for crew training and proficiency flying;

(vi) Instructional flying;

(vii) Local service air carriers, including requirements for crew training and proficiency flying;

(viii) Mail transport flying including requirements for crew training and proficiency flying;

(ix) Non-flying use of aviation fuels;

(x) Other air carriers including requirements for crew training and proficiency flying; and

(xi) Public aviation including requirements for crew training and proficiency flying.

(3) Ninety (90) percent of base period use (as reduced by application of an allocation fraction) for the following uses:

(i) Air travel club flying, including requirements for crew training and proficiency flying; and

(ii) Personal non-business flying.

(p) Section 211.144 may be amended to read as follows:

§ 211.144 *Fixed based operators.*

Notwithstanding the general provisions of § 211.12(b)(1), fixed base operators are entitled to receive from their suppliers an amount of aviation fuel equal to one hundred (100) percent of base period use as reduced by the application of the supplier's allocation fraction for use in the conduct of an ongoing business of selling aviation fuels to wholesale purchaser-consumers and end-

users. Notwithstanding the provisions of Subpart A of this part, if during the base period, a fixed base operator had more than one base period supplier, the fixed base operator shall have designated as its base period supplier that supplier which is its supplier on the date of the provisions of Special Rule No. 1 take effect.

(q) Section 211.145 may be amended by revising paragraph (b), subparagraph (1) and deleting paragraphs (c) and (d) to read as follows:

§ 211.145 *Supplier/purchaser relationships and adjustments of base period use.*

* * * * *

(b)(1) Civil air carriers may apply to the appropriate DOE office for adjustments to base period use based upon changed circumstances. Applications under this paragraph shall be fully supported by detailed facts, figures and other documentation. DOE may consult with appropriate Federal agencies in processing such applications. Adjustments under this paragraph will be granted only where there are compelling situations requiring relief.

* * * * *

(c) [Deleted]

(d) [Deleted]

(r) Section 211.146 may be amended by revising paragraph (c) subparagraphs (1), (3) and (7) to read as follows:

§ 211.146 *Method of Allocation.*

* * * * *

(c)(1) For periods corresponding to a base period beginning after the date specified by the Administrator international air carriers which have traditionally used bonded aviation fuel for international flights shall be allocated non-bonded aviation fuels by their base period suppliers as provided by this paragraph. Upon certification by an international air carrier to its base period suppliers that the carrier is unable to purchase or obtain sufficient bonded aviation fuel for a period corresponding to a base period at prices which do not exceed the lawful price of its base period suppliers of bonded fuel for similar volumes of non-bonded aviation fuel at the desired location, the base period suppliers shall provide non-bonded aviation fuel to that carrier. International air carriers which do not have base period suppliers or whose base period suppliers are unable to supply them currently with non-bonded aviation fuel shall apply to ERA for assignment of suppliers of non-bonded aviation fuels.

* * * * *

(3) An international air carrier which files a certification with a supplier under this paragraph shall provide such certification to its supplier at least fifteen (15) days prior to the beginning of the period corresponding to a base period to which the certification applies except that the initial certification following the effective date of the provisions of Special Rule No. 1 to this part shall be provided to the supplier within fifteen (15) days after such date. The certification shall specify:

(i) The volumes of bonded aviation fuel which can be obtained for the period from all sources;

(ii) The volumes of bonded aviation fuel which can be obtained from that supplier;

(iii) The international air carrier's base period use for that period;

(iv) The amount of the international air carrier's base period use to be supplied by that supplier;

(v) The amount of bonded fuel which the supplier it to subtract from that portion of the carrier's base period use to be supplied by the supplier in addition to the volume of bonded aviation fuel to be supplied by the supplier in determining the amount of non-bonded fuel the supplier is to supply to the carrier.

* * * * *

(7) For each period corresponding to a base period beginning after the date specified by the Administrator under Special Rule No. 1 to this part, no international air carrier shall accept non-bonded aviation fuel under this paragraph unless it has provided ERA with the following information by supplier for each period corresponding to a base period:

(i) The carrier's base period volume of bonded fuel;

(ii) The carrier's base period volume of non-bonded aviation fuel;

(iii) The amounts of any adjustments to the carrier's base period volume; and

(iv) The carrier's total base period volume.

(s) Section 211.147 may be amended by revising paragraphs (a), (b), (c) and (d) and the addition of paragraph (e) to read as follows:

§ 211.147 *Procedures and reporting requirements.*

(a) All applications for adjustment or assignment of aviation fuels to civil air carriers (except non-scheduled air taxi/commercial operators) shall be filed with the ERA National Office in accordance with Subparts B and C, respectively of Part 205 of this chapter. All other matters pertaining to the allocation of aviation fuels to civil air carriers (except non-scheduled air taxi/commercial operators) shall be addressed to the ERA National Office at the address provided in § 205.12, unless otherwise specified.

(b) All matters pertaining to the allocation of aviation fuels for general aviation, non-scheduled air taxi/commercial operators, public aviation and non-flying uses of aviation fuels shall be addressed to the appropriate supplier. Any matters unresolved at the supplier level may be referred directly to the appropriate ERA Regional Office at the address provided in § 205.12.

Civil air carriers (except non-scheduled air taxi-commercial operators) shall report monthly their aviation fuel usage to ERA in accordance with forms and instructions issued by ERA. Civil air carriers shall file reports pursuant to this paragraph with the National ERA at the address provided in § 205.12.

(d) All other wholesale purchaser-consumers, including non-scheduled air taxi/commercial operators and wholesale purchaser-resellers shall comply with the reporting and recordkeeping requirements specified in § 211.223 with information on uses and activities and total pumpage per month of jet fuel and aviation gasoline.

(e) The general reporting and recordkeeping requirements for refiners and importers contained in § 211.222 shall apply to this subpart.

(t) Section 211.162 may be amended by revising the definition of "base period" to read as follows:

§ 211.162 *Definitions.*

For the purposes of this subpart—"Base period" may be defined separately for utility and non-utility users and means the month or calendar quarter corresponding to the current month or calendar quarter, in the 12-month period ending with the second full month prior to the month in which the Administrator issues an order effectuating the Special Rule, or such other 12-month period as the Administrator should consider appropriate.

(u) Section 211.163 may be amended by revising paragraph (b), subparagraph (2), and paragraph (c), subparagraphs (2) and (3) to read as follows:

§ 211.163 *Allocation levels*

* * * * *

(b) *Allocation levels not subject to an allocation fraction.* * * *

(2) The allocation level as specified each month by the ERA for utility use. In specifying the allocation levels for each utility the ERA may include but is not limited to the following considerations:

(i) Each utility within appropriate groupings shall absorb an equal percentage cutback in electricity generation, to the maximum extent possible.

(ii) The fact that electric generating plants which now burn residual fuel oil have been identified by the ERA as candidates for conversion to coal, and the maximum possible extent to which such plants could be utilized after conversion.

(iii) The extent to which any electric generating plants which burn coal may be utilized more fully than at present.

(iv) The ability to use other forms of energy in adequate supply;

(v) The extent to which certain minimal levels of residual fuel oil consumption are essential; and

(vi) Available stocks of residual fuel oil held by each utility.

(c) *Allocation levels subject to an allocation fraction.* * * *

(2) One hundred and ten (110) percent of base period use (as reduced by application of an allocation fraction) for residential space heating.

(3) One hundred (100) percent of base period use as reduced by an allocation fraction for industrial use including space heating and all other users and uses of residual fuel oil not included in paragraphs (b) or (c) (1) or (2) of this section.

(v) Section 211.166 may be amended by revising subparagraph (d) to read as follows:

§ 211.166 *Method of allocation.*

* * * * *

(d) *Utilities.* (1) For purposes of calculating the allocation of residual fuel oil to utilities for delivery in each month beginning with the first month of the date specified by the Administrator under Special Rule No. 1 to this part:

(i) The ERA will notify each utility to establish a supplier percentage for each sup-

plier and forward this information to the ERA within 7 days of such notification. The supplier percentage will be the volume purchased from each supplier divided by the total volume purchased from all suppliers during the base period.

(ii) The ERA will determine the amount of residual fuel oil allocated for delivery to each utility for a single month, or for several months at a time, based upon the supply available for utilities, the ability of the utility to use non-oil based energy, the considerations specified in § 211.163(b)(2) and other relevant considerations and may modify such determinations if necessary.

(iii) Based on the supplier percentages determined as set forth in paragraph (d)(1)(i) of this section, the ERA will publish the amounts of residual fuel oil allocated to each utility for delivery for a single month or several months at a time, and the amounts required to be supplied for each month by each supplier. The amounts required to be supplied by each supplier will be calculated by multiplying each utility's specified monthly allocation amount by that supplier's percentage.

(2) Within 48 hours after receipt of an ERA allocation notice, each supplier of a utility shall notify that utility of its anticipated ability to supply, during the month for which the allocation amount is specified, the entire amount of residual fuel required to be supplied by that supplier. If a supplier of a utility is unable to supply its specified amount, the supplier may request an extension to the delivery period in that month of up to 12 days. Following receipt of a request for extension, the utility must notify the supplier within 48 hours of its determination of the acceptability of the requested extension and of the amount to be delivered during the extension period. If the utility refuses to accept the extension, the supplier and utility shall notify the ERA of the reason for the request for extension by the supplier and the refusal to accept the extension by the utility. The ERA shall then determine the amounts to be delivered and the date or dates for delivery.

(3) Suppliers and utilities may apply to the ERA for adjustment to the requirement of § 211.163 and paragraph (d)(1)(i) of this section, or assignment of a new supplier, in accordance with Subparts B and C, respectively, of Part 205 of this chapter.

(4) Utilities may, and are encouraged to, by mutual agreement and after notice to ERA, apportion their respective allocated residual fuel oil volumes, other fuel volumes, or generated power among themselves.

* * * * *

(w) Section 211.167 may be amended by revising subparts (a) and (b) to read as follows:

§ 211.167 *Procedures and reporting requirements.*

(a) All matters pertaining to the allocation of residual fuel oil for the electric industry shall be addressed to the ERA National Office, at the address provided in § 205.12. Applications for adjustment and assignment of residual fuel oil for the electric utilities shall be filed in accordance with Subparts B and C, respectively, of Part 205 of this chapter.

(b) All matters pertaining to the allocations of residual fuel oil to non-utility users of residual fuel oil shall be addressed to the appropriate ERA Regional Office at the address provided in § 205.12. Applications for adjustment and assignment of residual fuel oil to non-utility users of residual fuel oil shall be filed in accordance with Subparts B and C, respectively, of Part 205 of this chapter.

* * * * *

(x) Section 211.182 may be amended by revising the definition of "base period" and "naphthas" to read as follows:

§ 211.182 *Definitions.*

For purposes of this subpart—

"Base Period" means the calendar quarter corresponding to the current calendar quarter of the 12-month period ending with the second full month prior to the month in which the Administrator issues an order effectuating the Special Rule, or such other 12-month period as the Administrator should consider appropriate. * * *

"Naphthas" mean petroleum fractions made up predominantly of hydrocarbons whose boiling points fall within the temperature range of 85° to 430°F, excluding natural gasoline and condensates. This definition does not include specific hydrocarbon constituents such as hexane or special naphthas (solvents) or other products which are separately allocated.

* * * * *

(y) Section 211.183 may be amended by revising paragraphs (a), (b) and adding paragraph (c) to read as follows:

(a) *General.* The allocation levels in this paragraph apply only to allocations made by suppliers to wholesale purchaser-consumers and end-users. Suppliers shall first allocate one hundred (100) percent of the allocation requirements of all their purchasers entitled to an allocation under this part without application of an allocation fraction. Suppliers may then dispose of the remainder of their total supply in accordance with the provisions of § 211.10(g). The allocation levels listed below are not arranged in sequence of priority. Suppliers shall distribute available supplies of naphthas and gas oils to all classifications of purchasers listed in the following allocation levels without regard to order of listing.

(b) *Allocation levels (not subject to an allocation fraction).* One hundred (100) percent of current requirements for the following uses:

(1) Agricultural production and

(2) Department of Defense use as specified in § 211.26.

(c) *Allocation levels (subject to an allocation fraction).* One hundred (100) percent of base period use for the following uses:

(1) Petrochemical feedstock uses;

(2) Synthetic natural gas feedstock use or plant fuel use;

(3) Gasoline blending and manufacturing; and

(4) All other uses

(z) Section 211.185, paragraph (a) may be amended to read as follows:

§ 211.185 *Method of allocation.*

(a) The provisions of § 211.10 shall apply to this subpart.

* * * * *

(aa) Section 211.186 may be amended by revising paragraphs (a), (b) and (c) to read as follows:

§ 211.186 *Procedures and reporting requirements.*

(a) All refiners and importers shall report in accordance with forms and procedures to be issued by DOE.

(b) The provisions contained in subpart L of this part shall not apply to this subpart except §§ 211.223 and 211.225.

(c) All applications for adjustment or assignment of naphthas and gas oils shall be filed with the DOE National Office in accordance with Subparts B and C, respectively, of Part 205 of this chapter, except that applications pertaining to synthetic natural gas production shall accord with § 211.29. All other matters pertaining to allocation of naphthas and gas oils shall be addressed to the FEA National Office at the address provided in § 205.12.

(bb) Section 211.202 may be amended by revising the definition of "base period", "greases", "lubricants" and "wholesale purchaser-consumer" to read as follows:

§ 211.202 *Definitions.*

For purposes of this subpart—

"Base Period" means the calendar quarter corresponding to the current calendar quarter of the 12-month period ending with the second full month prior to the month in which the Administrator issues an order effectuating the Special Rule, or such other 12-month period as the Administrator should consider appropriate. * * *

"Greases" means petroleum lubricating products which are solid or semifluid, produced through a refining process or dispersion of a thickening agent in a liquid petroleum lubricant. * * *

"Lubricants" means all grades of lubricating oils designed to be used for lubricating purposes in industrial, commercial and automotive use without further modification, including lubricating oils that have been blended with additives, provided that refined petroleum products comprise more than 10 percent of the blend by weight. * * *

"Wholesale purchaser-consumer" means any firm that is an ultimate consumer which, as part of its normal business practices, purchases or obtains an allocated product from a supplier and receives delivery of that product into storage substantially under the control of that firm at a fixed location and purchased or obtained more than 20,000 gallons of lubricants, 10,000 pounds of greases or 55,000 gallons of any other product subject to this subpart in any completed base period year.

(cc) Section 211.203, paragraph (c) may be amended to read as follows:

§ 211.203 *Allocation levels.*

* * * * *

(c) *Allocation levels subject to an allocation fraction.* (1) One hundred (100) percent of current requirements (as reduced by the application of an allocation fraction) for the following uses:

(i) Emergency service;

(ii) Energy production;

(iii) Sanitation services;

(iv) Passenger transportation services;

(v) Telecommunications services; and

(vi) Cargo, freight and mail hauling.

(2) One hundred (100) percent of base period use for:

(i) Chemical processing;

(ii) Petrochemical feedstock use;

(iii) Industrial use;

(iv) Synthetic natural gas plant feedstock use; and

(v) Blending and compounding of lubricants.

(3) Ninety (90) percent of base period use for:

(i) Gasoline blending and manufacturing; and

(ii) All other uses.

* * * * *

## PART 212—MANDATORY PETROLEUM PRICE REGULATIONS

3. Part 212 is amended by adding Special Rule No. 1 as an appendix to read as follows:

APPENDIX—SPECIAL RULE NO. 1 TO PART 212

STANDBY PRODUCT PRICE REGULATIONS

1. *Purpose.* This Special Rule No. 1 to Part 212 sets forth the rules for pricing of covered and specified products as defined in paragraph 4 of this special rule, as necessary to attain the objectives of section 4(b)(1) of the Emergency Petroleum Allocation Act of 1973, as amended.

2. *Applicability.* (a) This special rule is effective when ordered by the Administrator.

(b) During the time period this special rule is in effect, it supersedes the relevant portions of sections 212.56 and 212.57 and any inconsistent provisions of Part 212.

(c) This special rule expires when Special Rule No. 1 to Part 211 expires or when ordered by the Administrator.

3. *Scope.* The Administrator may order this special rule into effect upon any or all products subject to the provisions of Part 212 and, to the extent the Mandatory Petroleum Price Regulations are reimposed on any product previously exempted, this special rule may be made effective as to such products. This special rule may be imposed with respect to refiners, resellers, retailers, and reseller-retailers. Products subject to this special rule, as ordered by the Administrator, are set forth in paragraph 4 of this special rule as specified products and in Part 212 as covered products.

4. *Definitions.* "Administrator" means the Administrator of the Economic Regulatory Administration, Department of Energy.

"Base period" with respect to resellers and retailers means the 30-day period immediately preceding the date this special rule is made effective for that product or such other date as the Administrator may determine.

"Covered products" means covered products as defined in § 212.31 of Part 212.

"Specified products" means products subject to this special rule as ordered by the Administrator.

5. *Refiner Price Rule.* (a) When this special rule is ordered into effect by the Administrator, refiners shall calculate the maximum lawful selling price for each specified product pursuant to the price computation formula set forth in Subpart E to Part 212. The maximum lawful selling price shall be computed separately for each specified product.

(b) Notwithstanding the provisions in Subpart E or in Paragraph 5(a) above;

(i) When this special rule is imposed on middle distillate and residual fuel oil, a portion or all of the increased costs attributable to middle distillate and residual fuel oil may be reallocated to covered and specified products (other than propane) as directed by the Administrator;

(ii) Unrecouped increased costs for specified products incurred prior to the day this special rule is made effective shall not be recouped on such specified products while this special rule is in effect but unrecouped increased costs incurred subsequent to the date this rule is made effective may be carried forward and recovered pursuant to § 212.83(e);

(iii) The Administrator may adjust the extent, if any, to which unrecouped increased costs for covered but not specified products, incurred prior to the day this special rule is made effective, may be recouped while this special rule is effective;

(iv) The Administrator may adjust the maximum lawful selling price for specified products and covered products to reflect unrecouped increased costs incurred prior to the day this special rule is made effective;

(v) When any type or grade of gasoline becomes a specified product, the Administrator may adjust the May 15, 1973 selling price (or selling price on a date established under subparagraph (vi) below) for that type or grade of gasoline or for the category "i" equals gasoline; to the extent the Administrator increases the May 15, 1973 selling price (or selling price on a date established under subparagraph (vi) below) of any product pursuant to this paragraph, increased costs must be reduced in an equal total dollar amount on other covered or specified products as determined by the Administrator;

(vi) The Administrator may adjust the base date and base period for specified or covered products to a more recent date than May 15, 1973 and more recent month than May 1973, respectively, for the purpose of calculating maximum lawful selling prices.

6. *Reseller and Retailer Price Rule.* (a) Except for sales to end-users as defined in § 211.51 of Part 211 and except for sales to purchasers which did not purchase during the base period, a reseller or retailer may not charge a price for a specified product which exceeds the price charged by the seller in the most recent sale to the purchaser concerned during the base period, plus an amount which reflects, on a dollar for dollar basis, increased product costs incurred subsequent to the date this special rule is made effective and plus an amount, as established by the Administrator, which reflects increased nonproduct costs.

(b) In the case of sales to end-users as defined in § 211.51 of Part 211, a reseller or retailer may not charge a price for a specified product which exceeds the weighted average of the lawful prices charged in sales of the product to the class of purchaser concerned on the most recent day during the base period in which there were sales of the product to the class of purchaser concerned, plus an amount which reflects on a dollar for dollar basis, increased product costs incurred subsequent to the date this special rule is made effective and plus an amount, as established by the Administrator, which reflects increased nonproduct costs.

(c) In the case of sales to purchasers which did not purchase a specified product during the base period, a reseller or retailer may not charge a price for a specified product which exceeds the weighted average of the lawful prices charged in sales of the product to the class of purchaser concerned on the most recent day during the base period in which there were sales of the product to the class of purchaser concerned, plus an amount which reflects, on a dollar for dollar basis, increased product costs incurred subsequent to the date this special rule is made effective and plus an amount, as established by the Administrator, which reflects increased nonproduct costs. For purposes of this subparagraph (c), the class of purchaser concerned is the class, as defined in Part 212.31, which is the most suitable class for the purchaser which did not purchase the specified product during the base period.

(d) In the case of sales to a purchaser which did not purchase a specified product during the base period and for which there is no suitable class as defined in Part 212.31, a reseller or retailer may not charge a price which exceeds the weighted average of the lawful prices charged in sales of the product to the most comparable class of purchaser on the most recent day during the base period in which there were sales of the product to purchasers of the specified product, plus an amount which reflects, on a dollar for dollar basis, increased product costs incurred subsequent to the date this special rule is made effective and plus an amount, as established by the Administrator, which reflects increased nonproduct costs.

(e) The Administrator may establish price adjustments to reflect increased nonproduct costs incurred subsequent to the base period.

(f) A seller which determines a highest permissible selling price pursuant to subparagraph (c) and (d) of this special rule shall:

(i) Maintain records, to be made available to DOE upon request, which state (1) the name of the class of purchaser; (2) all purchasers currently in the class of purchaser, and, (3) the factors (e.g., location) used to establish the class of purchaser; and

(ii) Notify the purchaser, except for end users, in writing at the time of the first sale to the purchaser of (1) the name of the class of purchaser; (2) the factors used to establish the class of purchaser; and, (3) the weighted average of the lawful prices as determined under subparagraph (c) or (d) above, together with a statement that the weighted average price is the purchaser's imputed base price under this special rule.

[FR Doc. 79-1814 Filed 1-15-79; 4:29 pm]

| Department | Billing Code |
|---|---|
| Federal Trade Commission | 6750-01 |
| Fine Arts Commission | 6330-01 |
| Foreign Claims Settlement Commission | 6770-01 |
| General Accounting Office | 1610-01 |
| General Services Administration: | |
| Automated Data and Telecommunications Service | 6820-25 |
| Federal Preparedness Agency, Executive Director | 6820-29 |
| Federal Property Resources Service | 6820-96 |
| Federal Supply Service | 6820-24 |
| General Counsel | 6820-38 |
| National Archives and Records Service | 6820-27 |
| OAD | 6820-34 |
| Office of Data Systems | 6820-37 |
| Office of Finance | 6820-39 |
| Office of Personnel | 6820-30 |
| Office of Stockpile Disposal, Federal Preparedness Agency | 6820-28 |
| Public Buildings Service | 6820-23 |
| Government Printing Office | 1505-01 |
| Health, Education and Welfare Department: | |
| Alcohol, Drug Abuse and Mental Health Administration | 4110-88 |
| Center for Disease Control | 4110-86 |
| Center for Disease Control/National Institute for Occupational Safety and Health | 4110-87 |
| Federal Council on Aging | 4110-92 |
| Food and Drug Administration | 4110-03 |
| Health Care Financing Administration | 4110-35 |
| Health Resources Administration | 4110-83 |
| Health Services Administration | 4110-84 |
| Human Development Services Office | 4110-92 |
| Institute of Museum Services | 4110-24 |
| National Institute of Education | 4110-39 |
| National Institutes of Health | 4110-08 |
| Office of Assistant Secretary for Health | 4110-85 |
| Office of Education (EA) | 4110-89 |
| Office of Education (EECS) | 4110-02 |
| Office of the Secretary | 4110-12 |
| Social Security Administration | 4110-07 |
| Housing and Urban Development Department | 4210-01 |
| Inter-American Foundation | 7025-01 |
| Intergovernmental Relations, Advisory Commission | 6115-01 |
| Interior Department: | |
| Fish and Wildlife Service | 4310-55 |
| Geological Survey | 4310-31 |
| Hearings and Appeals Office | 4310-10 |
| Heritage Conservation and Recreation Service | 4310-03 |
| Indian Affairs Bureau | 4310-02 |
| Land Management Bureau | 4310-84 |
| Mines Bureau | 4310-53 |
| National Park Service | 4310-70 |
| Office of Secretary | 4310-10 |
| Outdoor Recreation Bureau | 4310-03 |
| Reclamation Bureau | 4310-09 |
| Solicitor | 4310-17 |
| Surface Mining Reclamation and Enforcement Office | 4310-05 |
| Territorial Affairs Office | 4310-93 |
| Water Research and Technology Office | 4310-49 |
| Young Adult Conservation Corps | 4310-HJ |
| International Boundary and Water Commission, United States and Mexico | 4710-03 |
| International Broadcasting, Board for | 6155-01 |
| International Communications Agency | 8230-01 |
| International Joint Commission—United States and Canada | 4710-14 |
| International Trade Commission | 7020-02 |
| International Year of the Child, National Commission | 6820-49 |
| Interstate Commerce Commission | 7035-01 |
| Japan-U.S. Friendship Commission | 6820-95 |
| Justice Department: | |
| Attorney General | 4410-01 |
| Drug Enforcement Administration | 4410-09 |
| Federal Bureau of Investigation | 4410-02 |
| Immigration and Naturalization Service | 4410-10 |
| Law Enforcement Assistance Administration | 4410-18 |
| Parole Commission | 4410-01 |
| Prisons Bureau | 4410-05 |
| Labor Department: | |
| Employment Standards Administration | 4510-27 |
| Employment and Training Administration | 4510-30 |
| Federal Contract Compliance Programs Office | 4510-27 |
| International Labor Affairs Bureau | 4510-28 |
| Labor-Management Services Administration | 4510-29 |
| Labor Statistics | 4510-24 |
| Mine Safety and Health Administration | 4510-43 |
| Occupational Safety and Health Administration (Standards) | 4510-26 |
| Office of the Secretary (Administrative Law Judges) | 4510-20 |
| Office of the Secretary (Audit and Investigations) | 4510-21 |
| Office of the Secretary (Office of Information) | 4510-22 |
| Office of the Secretary | 4510-23 |
| Pension and Welfare Benefits Program | 4510-29 |
| Wage and Hour Division | 4510-27 |

| Department | Billing Code |
|---|---|
| Legal Services Corporation | 6820-35 |
| Libraries and Information Science, National Commission | 7527-01 |
| Library of Congress: | |
| Copyright Office | 1410-03 |
| Copyright Royalty Tribunal | 1410-01 |
| Management and Budget Office | 3110-01 |
| Manpower Policy, National Commission | 4510-30 |
| Marine Mammal Commission | 6820-31 |
| Merit Systems Protection Board | 6325-01 |
| Metric Board | 6820-94 |
| National Aeronautics and Space Administration | 7510-01 |
| National Capital Planning Commission | 7520-01 |
| National Credit Union Administration | 7535-01 |
| National Labor Relations Board | 7545-01 |
| National Mediation Board | 7550-01 |
| National Science Foundation | 7555-01 |
| National Security Council | 3150-01 |
| National Transportation Policy Safety Commission | 6820-36 |
| National Transportation Safety Board | 4910-58 |
| Navajo and Hopi Indian Relocation Commission | 4310-HB |
| Neighborhoods, National Commission | 7532-01 |
| Nuclear Regulatory Commission | 7590-01 |
| Occupational Safety and Health Review Commission | 7600-01 |
| Ohio River Basin Commission | 8410-01 |
| Overseas Private Investment Corporation | 3210-01 |
| Panama Canal Company | 3640-01 |
| Pennsylvania Avenue Development Corporation | 7630-01 |
| Pension Benefit Guaranty Corporation | 7708-01 |
| Personnel Management Office | 6325-01 |
| Postal Rate Commission | 7715-01 |
| Postal Service | 7710-12 |
| President's Commission on Pension Policy | 6820-29 |
| President's Commission on World Hunger | 6820-97 |
| Railroad Retirement Board | 7905-01 |
| Railway Association, U.S | 8240-01 |
| Renegotiation Board | 7910-01 |
| Science and Technology Policy, Office of | 3170-01 |
| Securities and Exchange Commission | 8010-01 |
| Selective Service System | 8015-01 |
| Small Business Administration | 8025-01 |
| Smithsonian Institution | 8030-03 |
| State Department: | |
| Agency for International Development | 4710-02 |
| Office of the Secretary | 4710-01 |
| Office of the Secretary | 4710-05 |
| Office of the Secretary | 4710-06 |
| Office of the Secretary | 4710-07 |
| Office of the Secretary | 4710-08 |
| Office of the Secretary | 4710-09 |
| Office of the Secretary | 4710-10 |
| Office of the Secretary | 4710-11 |
| Office of the Secretary | 4710-15 |
| Office of the Secretary | 4710-16 |
| Office of the Secretary | 4710-17 |
| Office of the Secretary | 4710-18 |
| Office of the Secretary | 4710-19 |
| Susquehanna River Basin Commission | 7040-01 |
| Technology Assessment, Office of | 1630-01 |
| Tennessee Valley Authority | 8120-01 |
| Textile Agreements, Committee for the Implementation | 3510-25 |
| Trade Negotiations, Special Representative for | 3190-01 |
| Transportation Department: | |
| Coast Guard | 4910-14 |
| Federal Aviation Administration | 4910-13 |
| Federal Highway Administration | 4910-22 |
| Federal Railroad Administration | 4910-06 |
| Materials Transportation Bureau | 4910-60 |
| National Highway Traffic Safety Administration | 4910-59 |
| Office of the Secretary | 4910-62 |
| Research and Special Programs Administration | 4910-62 |
| St. Lawrence Seaway Development Corporation | 4910-61 |
| Urban Mass Transportation Administration | 4910-57 |
| Treasury Department: | |
| Alcohol, Tobacco and Firearms Bureau | 4810-31 |
| Comptroller of the Currency | 4810-33 |
| Customs Service | 4810-22 |
| Engraving and Printing | 4810-34 |
| Federal Law Enforcement Training Center | 4810-32 |
| Government Finance Operations (Fiscal Service) | 4810-35 |
| Internal Revenue Service | 4830-01 |
| Mint, Bureau | 4810-37 |
| Office of the Secretary | 4810-25 |
| Public Debt (Fiscal Service) | 4810-40 |
| Revenue Sharing | 4810-28 |
| Secret Service | 4810-42 |
| Truman, Harry S., Scholarship Foundation | 6115-02 |
| U.S. Circuit Judge Nominating Commission | 4410-01 |
| Veterans Administration | 8320-01 |
| Wage and Price Stability Council | 3175-01 |
| Water Resources Council | 8410-01 |
| White House Office | 3195-01 |

**If your agency's name does not appear above, GPO may not have received your printing and binding requisition (Standard Form 1). Your documents cannot be printed in the FEDERAL REGISTER without a billing code.**

INFORMATION AND ASSISTANCE: Mr. William Rose, 202-275-2867.

## BILLING PROCEDURES FOR AGENCIES

As part of the billing procedures announced in the FEDERAL REGISTER of August 24, 1977, and to insure that each agency is correctly billed for only its own documents, the Office of the Federal Register requests agencies to insert the proper billing code on all of their documents. The six-digit billing code should be typed or handwritten in ink at the top of the first page on all three copies of documents submitted to the Office of the Federal Register for publication, as follows:

BILLING CODE: 0000-00

The list of agency billing codes assigned by the Government Printing Office follows:

| *Department* | *Billing Code* |
|---|---|
| ACTION | 6050-01 |
| Actuaries, Joint Board for the Enrollment | 4810-25 |
| Administrative Conference of the United States | 6110-01 |
| Agriculture Department: | |
| Agricultural Marketing Service | 3410-02 |
| Agricultural Research Service | 3410-03 |
| Agricultural Stabilization and Conservation Service | 3410-05 |
| Animal and Plant Health Inspection Service | 3410-34 |
| Commodity Credit Corporation | 3410-05 |
| Contract Appeals Board | 3410-25 |
| Cooperative State Research Service | 3410-22 |
| Economic Research Service | 3410-18 |
| Equal Opportunity Office | 3410-95 |
| Extension Service | 3410-09 |
| Farmer's Home Administration | 3410-07 |
| Federal Crop Insurance Corporation | 3410-08 |
| Food and Nutrition Service | 3410-30 |
| Food Safety and Quality Service | 3410-DM |
| Foreign Agricultural Service | 3410-10 |
| Forest Service | 3410-11 |
| Office of General Sales Manager | 3410-21 |
| Office of Management and Finance | 3410-90 |
| Office of Operations | 3410-98 |
| Office of the Secretary | 3410-01 |
| Rural Electrification Administration | 3410-15 |
| Science and Education Administration | 3410-03, 3410-22 |
| Soil Conservation Service | 3410-16 |
| Air Quality National Commission | 6820-98 |
| American Battle Monuments Commission | 6120-01 |
| Architectural and Transportation Barriers Compliance Board | 4110-12 |
| Arms Control and Disarmament Agency | 6820-32 |
| Arts and Humanities, National Foundation: | |
| National Endowment for the Arts | 7537-01 |
| National Endowment for the Humanities | 7536-01 |
| Blind and Other Severely Handicapped, Committee for Purchase From | 6820-33 |
| Central Intelligence Agency | 6310-02 |
| Civil Aeronautics Board | 6320-01 |
| Civil Rights Commission | 6335-01 |
| Commerce Department: | |
| Bureau of Economic Analysis | 3510-06 |
| Census Bureau | 3510-07 |
| Coastal Plains Regional Commission | 3510-36 |
| Economic Advisory Board | 3510-17 |
| Economic Development Administration | 3510-24 |
| Foreign Trade Zones Board | 3510-25 |
| Industry and Trade Administration | 3510-25 |
| Maritime Administration | 3510-15 |
| National Fire-Prevention and Control Administration | 3510-49 |
| National Oceanic and Atmospheric Administration (National Marine Fisheries Service) | 3510-22 |
| National Oceanic and Atmospheric Administration (Coastal Zone Management) | 3510-08 |
| National Oceanic and Atmospheric Administration | 3510-12 |
| National Technical Information Service | 3510-04 |
| Office of Assistant Secretary for Science and Technology | 3510-18 |
| Office of the Secretary | 3510-17 |
| Office of the Secretary | 3510-19 |
| Office of the Secretary | 3510-20 |
| Office of the Secretary | 3510-26 |
| Patents and Trademark Office | 3510-16 |
| Standards, National Bureau | 3510-13 |
| Telecommunications Office | 3510-60 |
| Travel Service | 3510-11 |
| Commodity Futures Trading Commission | 6351-01 |
| Community Services Administration | 6315-01 |
| Consumer Product Safety Commission | 6355-01 |
| Cost Accounting Standards Board | 1620-01 |

| *Department* | *Billing Code* |
|---|---|
| Defense Department: | |
| Air Force Department | 3910-01 |
| Army Department (Adjutant General Center) | 3710-08 |
| Defense Civil Preparedness Agency | 3810-01 |
| Defense Communications Agency | 3610-05 |
| Defense Intelligence Agency | 3810-70 |
| Defense Investigative Service | 3810-70 |
| Defense Logistics Agency | 3620-01 |
| Defense Mapping Agency | 3810-70 |
| Defense Nuclear Agency | 3810-70 |
| Defense Supply Agency | 3810-70 |
| Engineers Corps/Civil Works | 3710-92 |
| Engineers Corps | 3710-FR |
| Engineers Corps | 3710-FS |
| Engineers Corps | 3710-FT |
| Engineers Corps | 3710-GA |
| Engineers Corps | 3710-GB |
| Engineers Corps | 3710-GC |
| Engineers Corps | 3710-GE |
| Engineers Corps | 3710-GF |
| Engineers Corps | 3710-GH |
| Engineers Corps | 3710-GK |
| Engineers Corps | 3710-GL |
| Engineers Corps | 3710-GM |
| Engineers Corps | 3710-GN |
| Engineers Corps | 3710-GP |
| Engineers Corps | 3710-GR |
| Engineers Corps | 3710-GS |
| Engineers Corps | 3710-GT |
| Engineers Corps | 3710-GW |
| Engineers Corps | 3710-GX |
| Navy Department | 3810-01 |
| Navy Department | 3810-70 |
| Navy Department (Judge Advocate General) | 3810-71 |
| Office of the Secretary | 3810-70 |
| Delaware River Basin Commission | 6360-01 |
| Economic Advisers Council | 3120-01 |
| Economic Opportunity, National Advisory Council | 6820-42 |
| Employment and Unemployment Statistics, National Commission | 4510-23 |
| Energy Department: | |
| Bonneville Power Administration | 6450-01 |
| Economic Regulatory Administration | 6450-01 |
| Energy Information Administration | 6450-01 |
| Energy Research Office | 6450-01 |
| Energy Technology Office | 6450-01 |
| Environment Office | 6450-01 |
| Federal Energy Regulatory Commission | 6450-01 |
| Hearings and Appeals Office | 6450-01 |
| Intergovernmental and Institutional Relations Office | 6450-01 |
| Office of the Special Council for Compliance | 6450-01 |
| Office of the Secretary | 6450-01 |
| Southeastern Power Administration | 6450-01 |
| Southwestern Power Administration | 6450-01 |
| Western Area Power Administration | 6450-01 |
| Environmental Protection Agency | 6560-01 |
| Environmental Quality Council | 3125-01 |
| Equal Employment Opportunity Commission | 6570-06 |
| Export-Import Bank of the United States | 6690-01 |
| Farm Credit Administration | 6705-01 |
| Federal Communications Commission | 6712-01 |
| Federal Council on the Arts and Humanities | 7537-01 |
| Federal Deposit Insurance Corporation | 6714-01 |
| Federal Election Commission | 6715-01 |
| Federal Home Loan Bank Board | 6720-01 |
| Federal Home Loan Mortgage Corporation | 6720-02 |
| Federal Maritime Commission | 6730-01 |
| Federal Mediation and Conciliation Service | 6732-01 |
| Federal Mine Safety and Health Review Commission | 6820-12 |
| Federal Pay, Advisory Commission | 6820-43 |
| Federal Reserve System/Board of Governors | 6210-01 |

(Continued on inside back cover)